WAFER TYPE BUTTERFLY VALVE Z 011-A therm

Wafer type valve Z 011-A with integrated thermometer.
This construction is also deliverable for the series Z 014-A.

TECHNICAL DATA

Nominal diameter:	DN 20 - DN 200 (available only with hand lever)
Deliverable for the series:	Z 011-A and Z 014-A
Face-to-face:	EN 558 Series 20 ISO 5752 Series 20 API 609 Table 1
Flange accommodation:	EN 1092 PN 6/10/16 ASME Class 150
Lap-joint flange:	EN 1092
Weld-on flange:	EN 1092
Flange Surface Design:	EN 1092 Form A/B ASME RF, FF
Top flange:	EN ISO 5211
Marking:	EN 19
Tightness check:	EN 12266 (Leakage rate A) ISO 5208, Category 3
Temperature range:	-20°C to +130°C (depending on pressure, medium and material)
Operating pressure:	max. 16 bar
Vacuum:	1 mbar absolute

FEATURES

- EBRO therm butterfly valves are ready to accept thermometers, electronic thermo sensors (PT 100) or a system identification plate
- The valves are supplied with the mounting hole sealed and the thermometer is enclosed separately -marked to prevent-confusion
- The patented be-metallic helix guarantees a quick reaction time during temperature changes and - due to its position in the valve disc -prevents the formation of a mixed temperature between the medium and the valve body

GENERAL APPLICATIONS

- Civil engineering

WAFER TYPE BUTTERFLY VALVE Z 011-A therm

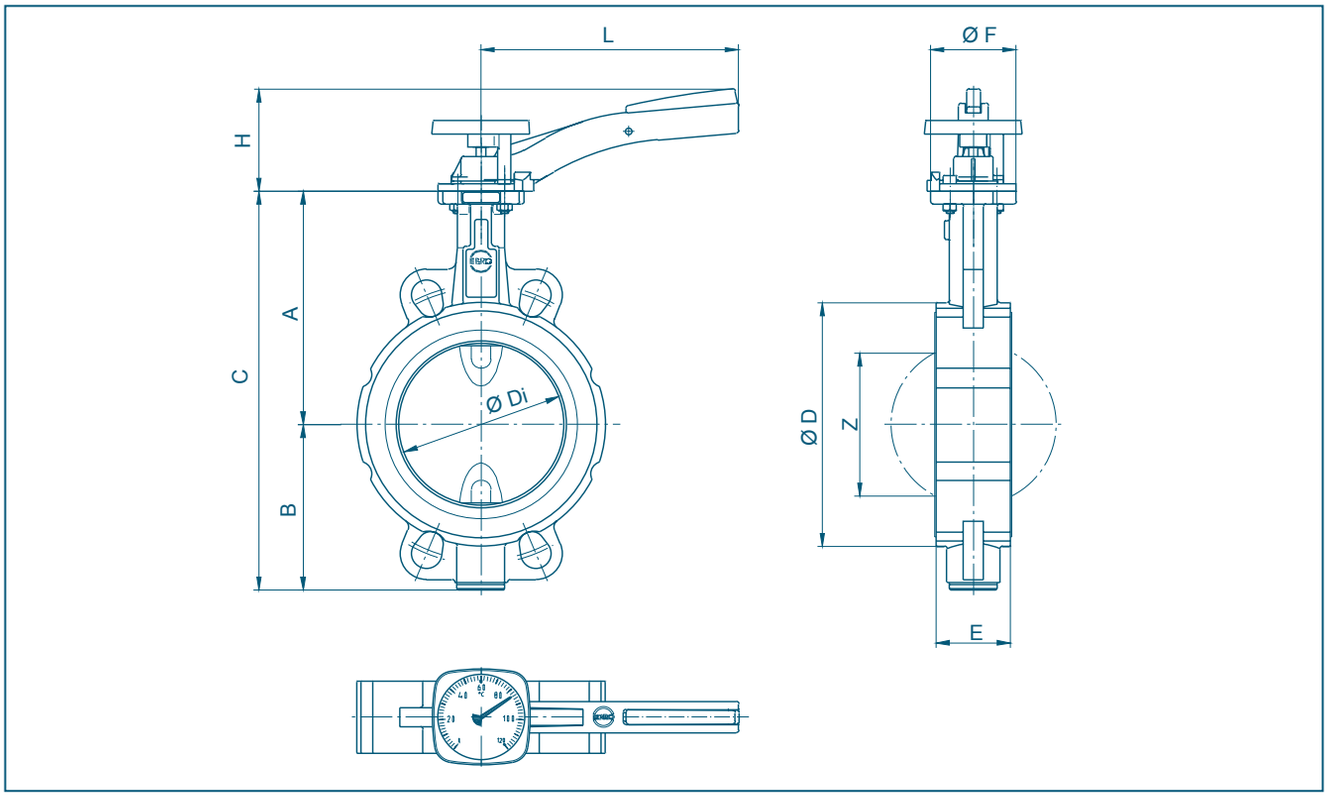

DN [mm]	Size [in]	Dimensions [mm]										Weight [kg]
		A	B	C	D	Di	E	F	H	L	Z	
20	**¾**	104	45	149	59	31,5	33	54	70	155	-	1,5
25	**1**	104	45	149	63	31,5	33	54	70	155	-	1,5
32	**1¼**	104	50	154	68	31,5	33	54	70	155	-	1,6
40	**1½**	113	66	179	80	38	33	54	70	155	22	2,0
50	**2**	126	84	210	95	48,5	43	54	70	155	25	2,4
65	**2½**	134	93	227	115	63,5	46	54	70	155	45	3,1
80	**3**	157	104	261	138	78,5	46	65	80	195	65	4,2
100	**4**	167	115	282	158	98,5	52	65	80	195	85	5,4
125	**5**	180	127	307	188	123,5	56	65	80	195	111	7,1
150	**6**	203	150	353	212	148	56	90	100	276	139	10,1
200	**8**	228	176	404	268	199	60	90	100	276	190	13,8

Subject to change without notice

ACCESSORIES

Screw sleeves

- In order to maintain a uniform design for the whole system, brass screw sleeves with different shaft lengths are available for mechanical thermometers where no valve is fitted

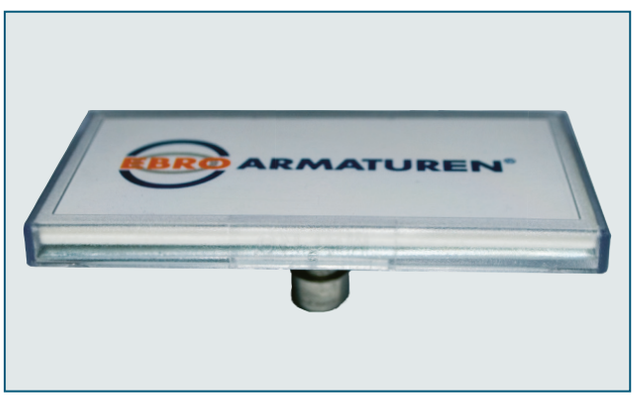

Identification plates

- EBRO therm butterfly valves are predesigned to accept an identification plate. Apppropriate base plates with mounting adapters and transparent covers are available as accessories

WAFER TYPE BUTTERFLY VALVE Z 011-A therm

MATERIAL SPECIFICATION AND PARTS LIST

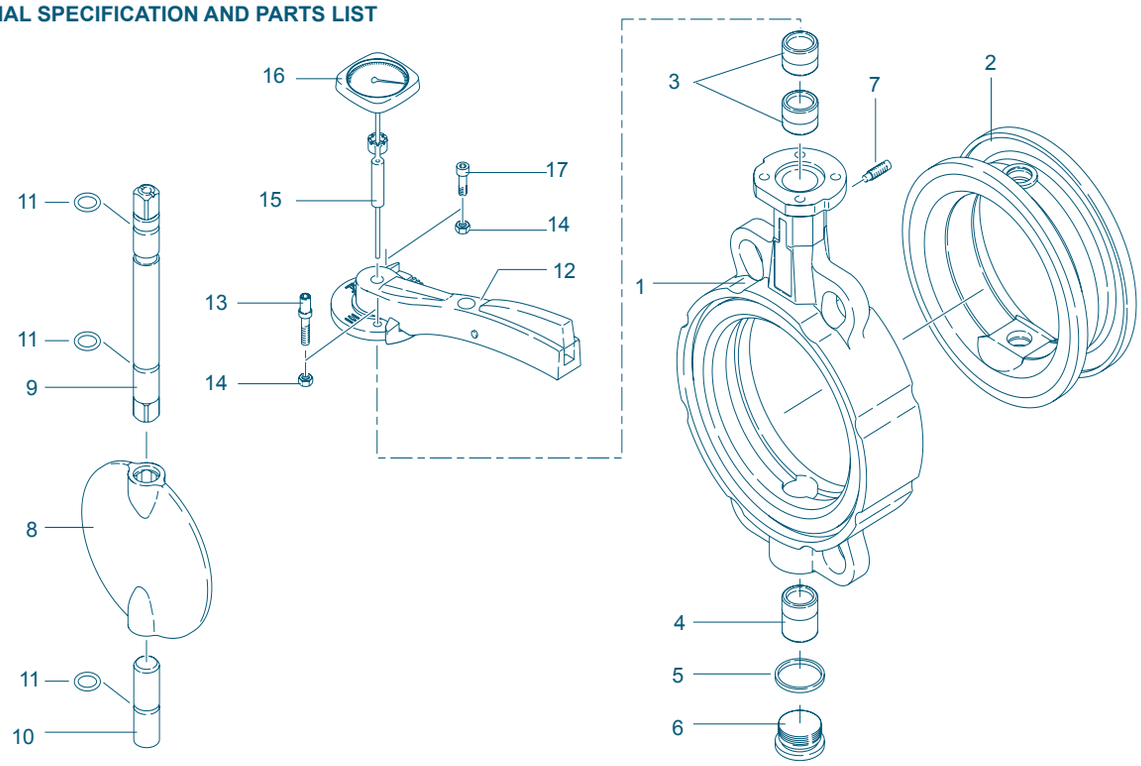

Pt.	Description	Material	Material No.	ASTM	Pt.	Description	Material	Material No.	ASTM
1	**Body**				**9/10**	**Shaft**			
	Grey Cast Iron	GG 25	0.6025	40 B		Stainless Steel	X14CrMoS17	1.4104	430 F
2	**Seat**						X5CrNiMo17-12-2	1.4401	316
	EPDM	Ethylene propylene diene monomer rubber					Hastelloy	2.4883	Hastelloy
3/4	**Bearing bush**				**11**	**O-ring**			
	Brass	MS 58	2.0401	B 45		NBR	Nitrile butadiene rubber		
	Polyamide	PA 66				FPM	Fluorocarbon rubber		
	PTFE	Polyterafluoroethylene			**12**	**Hand lever complete**			
5	**Seal DIN 7603**				**13**	**Screw**			
	Copper	Cu		Copper		Steel	St. galvanized		CS
6	**Plug screw DIN 908**				**14**	**Hex. nut**			
	Stainless Steel	G-X6CrNiMo18-10	1.4408	CF8M		Steel	St. galvanized		CS
7	**Set screw DIN 915**				**15**	**Thermometer holder**			
	Steel	45 H galvanized				PP	Polypropylene		
	Stainless Steel	X5CrNiMo17-12-2	1.4401	B8M	**16**	**Thermometer**			
8	**Disc**				**17**	**Socket screw**			
	Stainless Steel	G-X6CrNiMo18-10	1.4408 A	351CF8M		Steel	St. galvanized		
						Other materials upon request			

Subject to change without notice

EBRO ARMATUREN

www.ebro-armaturen.com
post@ebro-armaturen.com

01.2019