www.valve-korea.com

One Stop Solution Of Quality Valves

BUTTERFLY VALVE

CONCENTRIC, ECCENTRIC & TRIPLE-OFFSET TYPE

SSV corporation

PRODUCTS

Wafer Style Body
Size range: 3″ to 100″, (80mm to 2500mm)
Temp. range: –100 degrees C to over 800 degrees C
Flange rating: ANSI class 150 to ANSI class 600
Flange drilling: ANSI, MSS, API, JIS, DIN, BS
Face to face: API 609

Weld End
Size range: 3″ to 100″
Temp. range: –100 degrees C to over 800 degrees C
Flange rating: ANSI class 150 to ANSI class 1500
Flange drilling: ANSI, MSS, API, JIS, DIN, BS
Face to face: ANSI

Improve Quality in Order to Provide Customers

Double Flanged Body
Size range: 3″ to 120″, (80mm to 3000mm)
Temp. range: -100 degrees C to over 800 degrees C
Flange ratings: ANSI class 150 to ANSI class 1500
Flange drilling: ANSI, MSS, API, JIS, DIN, BS
Face to face: ISO 5752, ANSI B16.10, DIN 3203

Lugged Style Body
Size range: 3″ to 100″, (80mm to 2500mm)
Temp. range: -100 degrees C to over 800 degrees C
Flange rating: ANSI class 150 to ANSI class 600
Flange drilling: ANSI, MSS, API, JIS, DIN, BS
Face to face: API 609

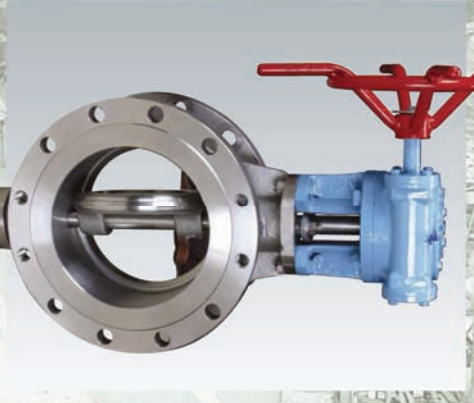

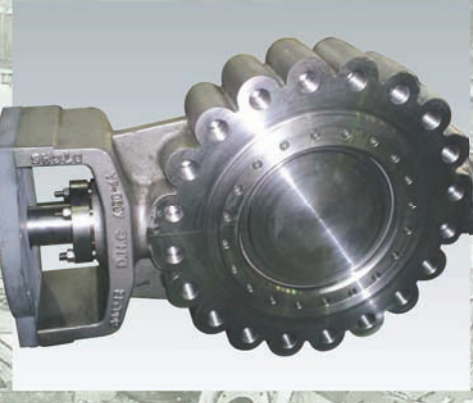

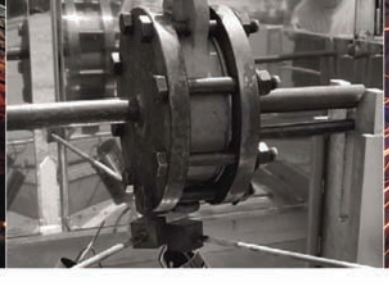

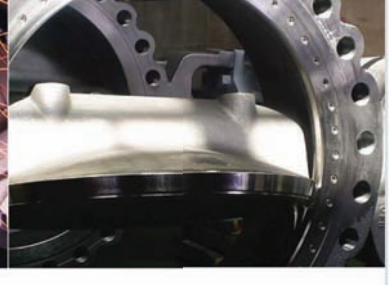

with 100% Satisfaction.

PRODUCTS

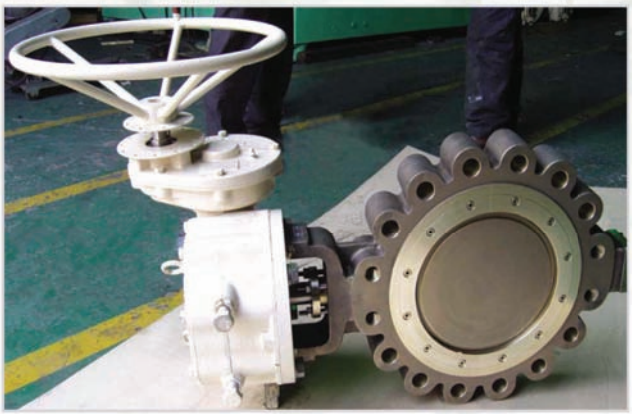

FIRE SAFETY TYPE SEAT TRIPLE OFFSET BUTTERFLY VALVE ZERO LEAKAGE BI-DIRECTION TYPE 8″~60″

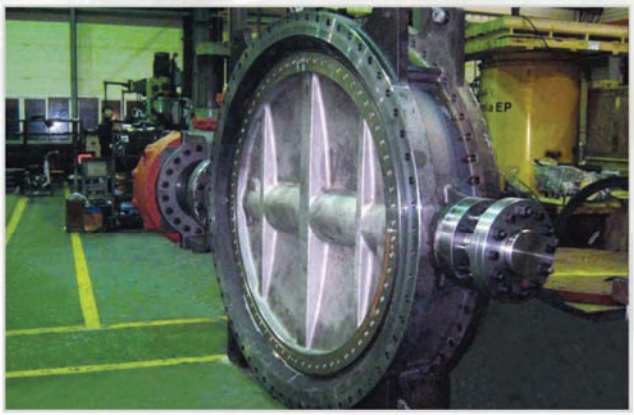

STEAM LINE METAL SEAT TRIPLE OFFSET BUTTERFLY VALVE ZERO LEAKAGE UNI-DIRECTION TYPE 4″~160″

METAL SEAT TRIPLE OFFSET BUTTERFLY VALVE ZERO LEAKAGE BI-DIRECTION TYPE 4″~160″

RUBBER LINED METAL SEAT TRIPLE OFFSET BUTTERFLY VALVE ZERO LEAKAGE UNI-DIRECTION TYPE 1050A ETC. 4″~160″

METAL SEAT TRIPLE OFFSET BUTTERFLY VALVE ZERO LEAKAGE UNI-DIRECTION TYPE 8″~60″

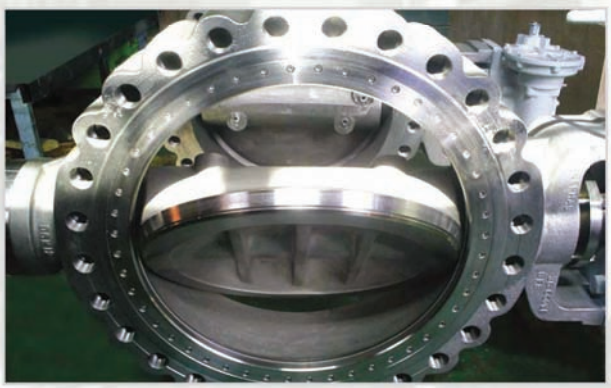

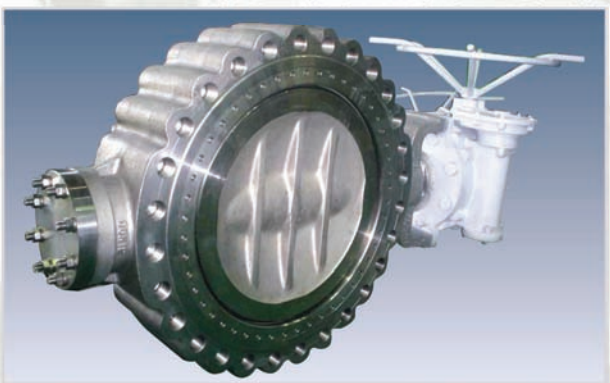

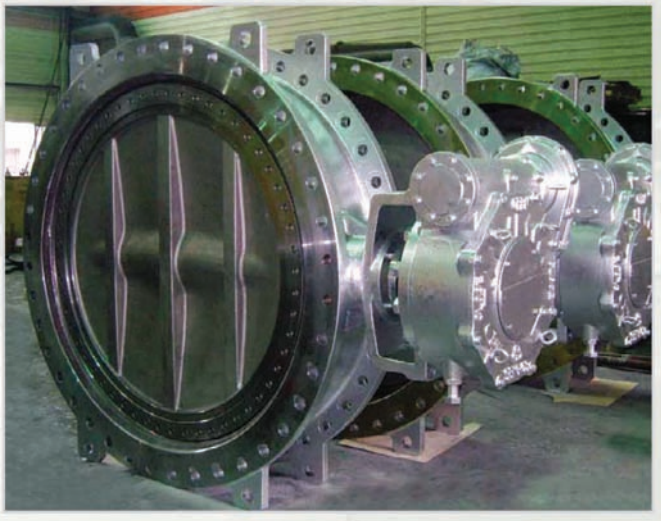

METAL SEAT TRIPLE OFFSET BUTTERFLY VALVE ZERO LEAKAGE UNI-DIRECTION TYPE 4″~160″

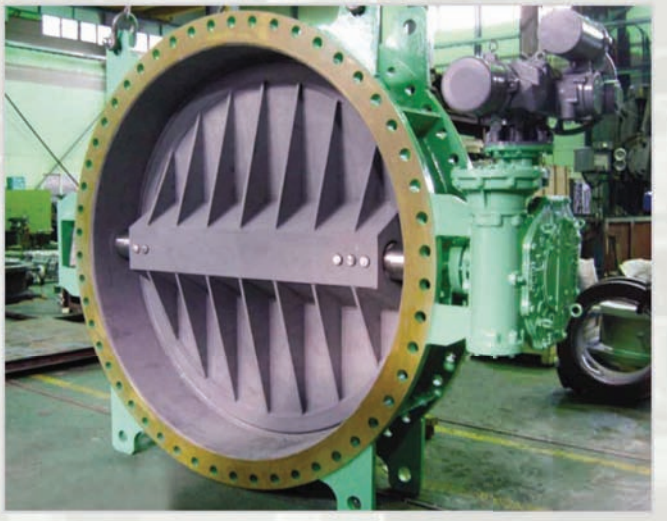

BFC GAS LINE METAL SEAT TRIPLE OFFSET BUTTERFLY VALVE ZERO LEAKAGE UNI-DIRECTION TYPE 4″~160″

HI-PRESSURE METAL SEAT TRIPLE OFFSET BUTTERFLY VALVE ZERO LEAKAGE BI-DIRECTION TYPE 4″~160″

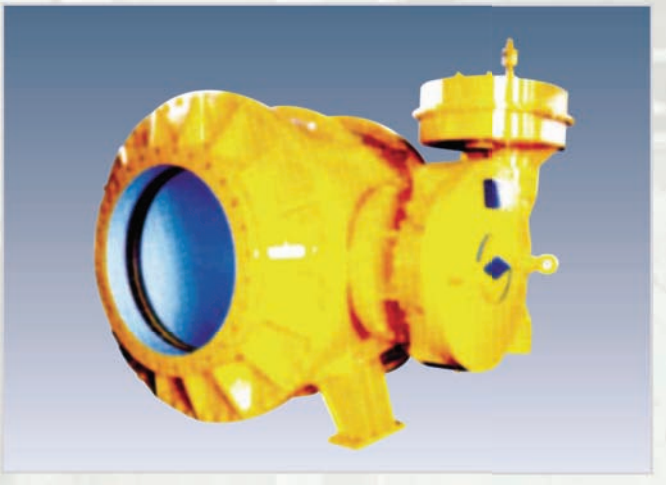

LARGE SIZE BALL VALVE TRUNION TYPE 4″~160″

WAFER TYPE BUTTERFLY VALVE ZERO LEAKAGE BI-DIRECTION TYPE 4″~160″

NON-SLAM CHECK VALVE TRIPLE OFFSET ZERO LEAKAGE 4″~160″

TRIPLE OFFSET BUTTERFLY VALVE DESIGN

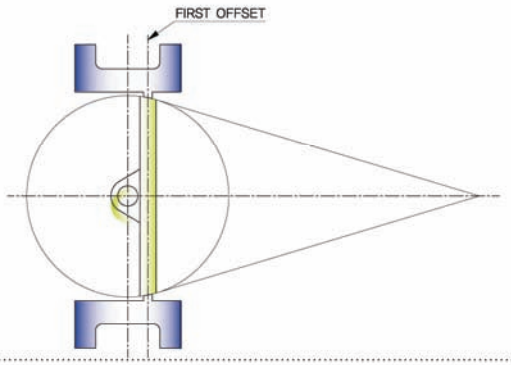

SINGLE OFFSET

The center of rotation is moved back from the centerline of the valve disc. The seat and seal are designed conically and on center. This design relies on a frictional, interference seal and so is applicable only to soft seated valves.

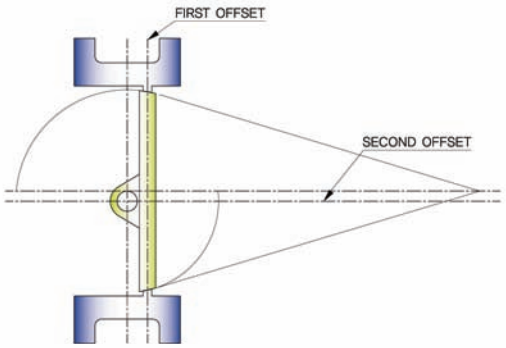

DOUBLE OFFSET

The center of rotation is moved from the centerline of the valve body. The seat ane seal design remains conical and on center. This design again relies on a frictional, interference seal, but the length of rotation over which this friction occurs is reduced, allowing a larger range of process resistant seat materials to be used. However these materials must be relatively soft or highly elastic to prevent "jamming".

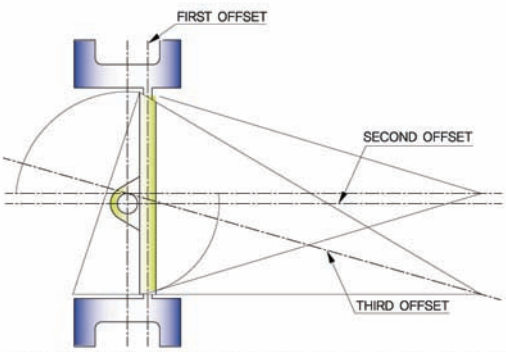

TRIPLE OFFSET

The centerline of the cone is ratated away from the valve centreline resulting in an ellipsoidal profile and providing the third offset. With this geometry, seat seal interference is completely eliminated ensuring long sealing life. The result is a torque seated, process pressure aided FRICTIONLESS seal. The geometry allows the body seat to be used as the closed limit stop, aiding operator adjustment. The Triple Offset design is ideally suited to metal seated valves providing bubble-tight performance on high temperature, high pressure and firesafe applications.

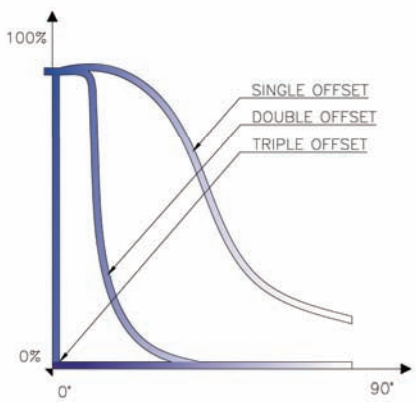

FRICTION RATE

- Triple offset and ellipsoidal sealing geometry
- Bi-Directional bubble tight shut-off
- Inherently Firesafe by design
- Developed Geometry results in
  - Zero Seat/Seal Friction
  - Low Torques
  - Extended Service Life
  - Continued Seal through Themal Cycling
  - Torque Seating
- Excellent flow and throttling characteristics covering services from Cryogenic to high temperature
- Excellent control of Fugitive Emission by virtue of Rotary stem movement and advanced packing materials
  - Less than 50ppm on Fugitive
  - Emission Test to cover EPA21

UNI-DIRECTION DESIGN(DHC-BTMN SERIES)

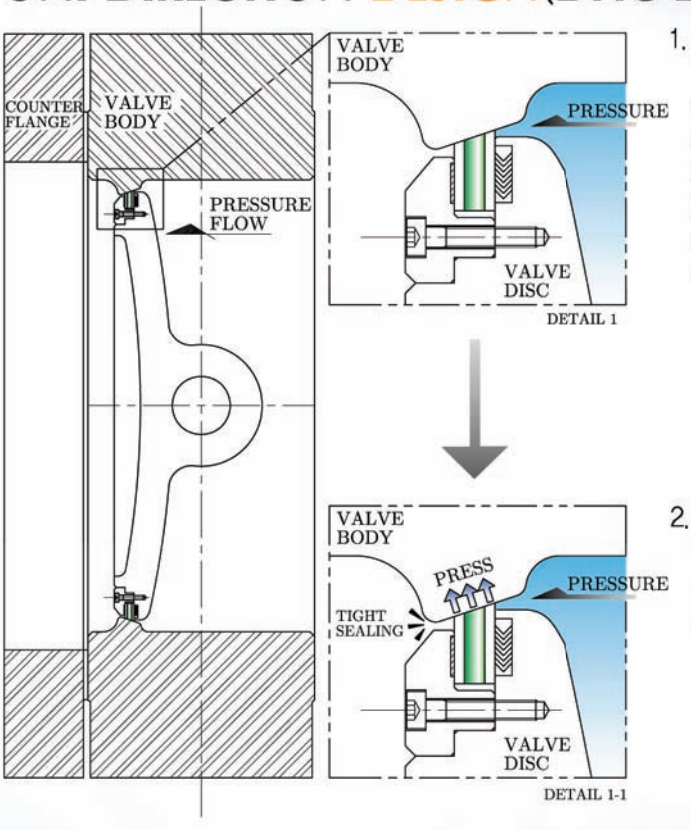

1. As you see the detail 1, this is the structure of inserting seal into disc. There is few changing of seal in the high pressure, and low torque due to small sealing surface.

2. As you see the detail 1-1, the seal in the disc is stuck on body seat surface under the pressure condition.

BI-DIRECTION DESIGN(DHC-BTMS SERIES)

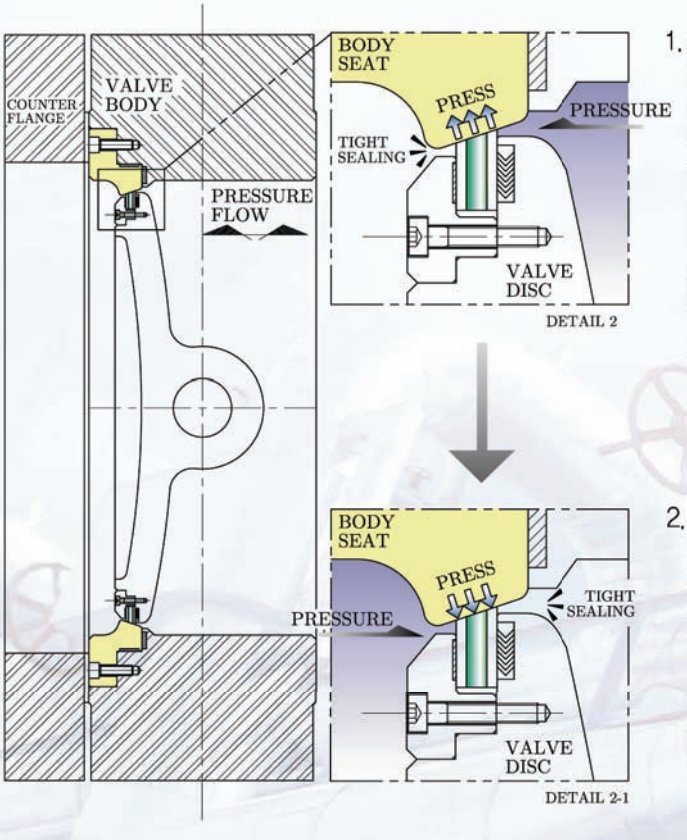

1. As you see the detail 2, this structure has seats both body and disc. This tight sealing can be ensured by the very close contact between the body seat and disc seat, under a flow direction pressure.

2. As you see the detail 2-1, the tight sealing can be ensured by the very close contact between the body seat and disc seat, under a reverse flow direction pressure.

Features

- Zero leakage
- Metal seated
- Bi-directional
- Inherently Fire safe
- Low operating torques
- Torque seated
- Continued sealing through thermal cycling
- Zero seat/seal friction
- Extended service life
- Excellent flow and throttling characteristics
- Excellent control of fugitive emissions
- Quarter turn operation

Design Standard Specifications

- Design: ASME/ANSI B16. 34, API 609, BS 5155, DIN 3840, JIS
- Fire safe: API 607, API 6FA, BS 6755
- Pressure Temperature ratings: ASME/ANSI B16.34
- Body & Seat Pressure Test: API Std. 598, API 6D, ISO 5208
- Seat leakage test: ANSI B16.104 class VI
- Flange drilling: ANSI B16.5, ANSI B16.47, MSS SP-44, DIN, JIS, BS
- Face to Face: ISO 5752, ANSI B16.10, API 609, BS 5155
- Marking: MSS SP-25

TRIPLE OFFSET BUTTERFLY VALVE SPECIFICATION

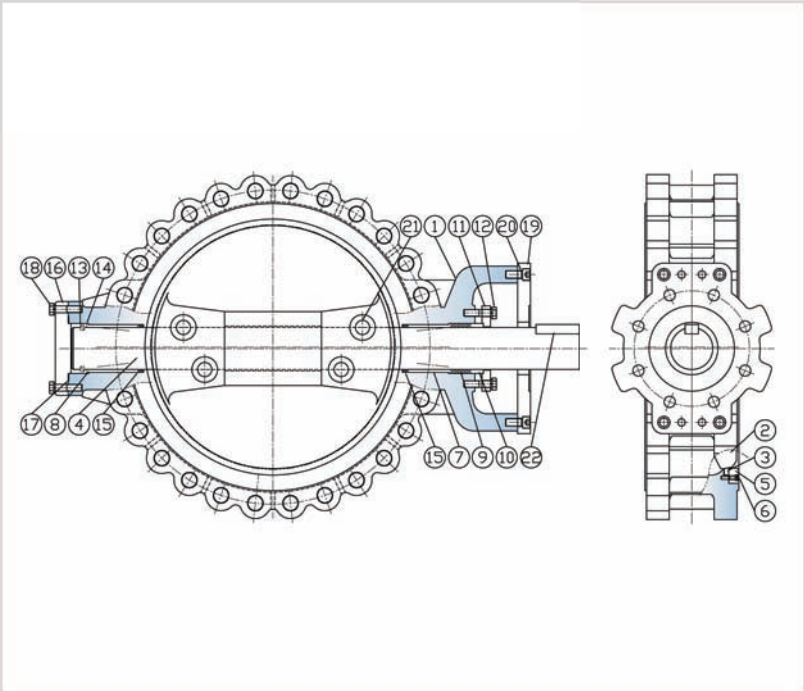

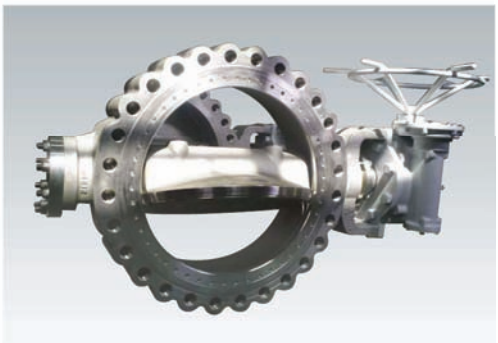

ITEM NO	DESCRIPTION	STANDARD GENERAL SPEC CLEAN WATER & SOUR GAS STEAM & ALL NORMAL CONDITION	ALL SCOPE LOW OR HIGH TEMP' FLUID OF ALL SCOPE & SEA WATER & CORROSIVE MEDIA
1	BODY	A216 WCB/A351 CF8M	BY A PLAN IT SELECTS.
2	DISC	A216 WCB/A351 CF8M	
3	BODY SEAT	LAMINATED STAINLESS STEEL+GRAPHITE	
4	SHAFT	STAINLESS STEEL (316/630/420/410/ETC)	
5	BODY SEAT RETAINER	STAINLESS STEEL (304/316/316L)	
6	RETAINER BOLT	STAINLESS STEEL (304/316/316L)	
7	MAIN BUSH	B148/B584/OILESS/STAINLESS	
8	STUB BUSH	B148/B584/OILESS/STAINLESS	
9	PACKING	GRAPHITE	
10	PACKING BUSH	B148/B584/STAINLESS	
11	PACKING GLAND	STAINLESS STEEL (304/316/316L)	
12	STUD BOLT & NUT	STAINLESS STEEL (304/316/316L)	
13	SHAFT RING	B148/B584/STAINLESS	
14	SHAFT RING HOLDER	STAINLESS STEEL (304/316/316L)	
15	DUST SEAL	GRAPHITE	
16	END COVER	CAST CARBON STEEL/STAINLESS STEEL	
17	END COVER GASKET	GRAPHITE/SPIRAL WOUND GASKET	
18	END COVER BOLT	STAINLESS STEEL (304/316/316L)	
19	TOP FLANGE	CARBON STEEL	
20	FLANGE BOLT	STAINLESS STEEL (304/316/316L)	
21	LOCK PIN & TAPER PIN	STAINLESS STEEL (316/630/420/410/ETC)	
22	KEY	STEEL	

※ AVAILIABLE MATERIAL (DUPLEX, AL-BRONZE, INCONEL, MONEL, ETC)

TRIPLE OFFSET BUTTERFLY VALVE TORQUE TABLE

VALVE SIZE	CLASS 150Lb(20 BAR G) PREFERRED DIRECTION	
	UNSEATING (N.m)	SEATING (N.m)
2	60	50
3	95	79
4	162	135
5	253	211
6	364	304
8	737	614
10	1187	989
12	1835	1524
14	2670	2225
16	3712	3094
18	4984	4153
20	6506	5422
24	10389	8658
28	15535	12946
30	18636	15530
32	22119	18433
36	30319	25265
40	40311	33592
42	46035	38363
48	66393	55327

VALVE SIZE	CLASS 300Lb(52 BAR G) PREFERRED DIRECTION	
	UNSEATING (N.m)	SEATING (N.m)
2	96	80
3	260	217
4	412	351
5	658	548
6	1028	857
8	1972	1643
10	3307	2756
12	5088	4240
14	7369	6141
16	10205	8504
18	13699	11375
20	17759	14799
24	28189	23491

VALVE SIZE	CLASS 600Lb(100 BAR G) PREFERRED DIRECTION	
	UNSEATING (N.m)	SEATING (N.m)
3	518	432
4	878	732
6	2132	1777
8	4069	3390
10	6791	5659
12	10404	8670
14	15012	12510
16	20719	17266
18	27630	23025
20	35850	29875
24	56634	47195

TRIPLE OFFSET BUTTERFLY VALVE TORQUE TABLE

VALVE SIZE	CLASS 900Lb(150 BAR G) PREFERRED DIRECTION	
	UNSEATING (N.m)	SEATING (N.m)
3	777	647
4	1422	1185
6	3432	2860
8	6518	5432
10	10835	9029
12	16539	13782
14	23786	19822
16	32733	27278
18	43537	36281
20	56354	46962
24	88654	73879

VALVE SIZE	CLASS 1500Lb(255 BAR G) PREFERRED DIRECTION	
	UNSEATING (N.m)	SEATING (N.m)
6	5835	4862
8	11080	7233
10	18417	15348
12	28112	23427
14	40430	33692
16	55635	46364
18	73997	61664
20	95777	79814
24	150660	125550

- Contact the sales office for torque figures not shown above.
- DHC suggests a minimum of 20% Safety Factor on the above torques.
- Although the valves are suitable for Bi-Directional use, the offset geometry creates a Preferred direction of flow which if used(for uni-directional flow) can show a torque and actuator size reduction.
- Run torques are 40% of the Preferred direction Opening torque.
- Torques shown are valid for temperatures of -100℃(-148℉) to+538℃(+1000℉) For temperatures outside this range consult DHC.
- Torques shown assume a maximum liquid velocity(pipe line) of 5 m/s. For higher liquid velocity, where hydrodynamic torque may need to be considered, consult DHC.
- Please ensure that any actuator chosen to operate the DHC valve is capable of supplying 5° over-travel and has mechanical limit stops controlling the closed position.
- Note that operators must be dowelled to the valve mounting plate. Dowels with be supplied with bare shaft valves but it is the purchasers responsibility to ensure separately purchased operators and mounting kits are machined to accommodate these dowels.
- If in doubt, contact the sales office.

TORQUE CONVERSION FACTORS				
N m	kN m	kgf m	lbf in	lbf ft
1	0.001	0.102	8.85	0.738
1000	1	101.972	8851	737.6
9.807	.0098	1	86.8	7.233
0.113	1.13 × 10-4	0.01155	1	0.083
1.356	0.0014	0.138	12	1

TRIPLE OFFSET BUTTERFLY VALVE 'CV' VALUES

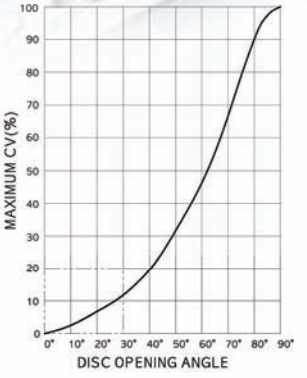

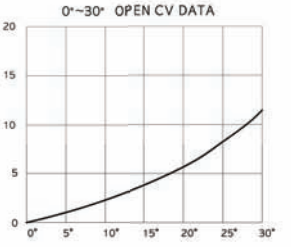

FLOW GRAPH

150LB MANUAL GEAR OPERATING TYPE

SIZE		5°	10°	15°	20°	25°	30°	35°	40°	45°	50°	55°	60°	65°	70°	75°	80°	85°	90°
mm	inch																		
80	3	1	6	14	23	31	39	47	54	62	71	82	96	112	128	143	156	163	165
100	4	2	12	26	42	57	72	85	98	113	130	150	176	205	234	262	285	299	302
150	6	16	31	45	59	76	101	134	178	233	297	369	448	531	616	698	758	796	800
200	8	30	57	82	108	140	185	246	327	427	544	676	821	974	1130	12810	1390	1460	1460
250	10	52	99	142	187	242	320	426	566	739	942	1170	1420	1690	1960	2220	2410	2530	2530
300	12	78	147	212	279	362	478	636	846	1100	1410	1750	2120	2520	2920	3310	3600	3780	3780
350	14	106	201	289	380	493	651	866	1150	1500	1920	2380	2890	3430	3980	4510	4890	5140	5140
400	16	165	313	451	594	769	1020	1350	1800	2350	2990	3720	4510	5350	6210	7040	7640	8020	8020
450	18	217	413	594	782	1010	1340	1780	2370	3090	3940	4890	5940	7050	8180	9270	10100	10600	10600
500	20	268	509	733	965	1250	1650	2200	2920	3820	4860	6040	7340	8710	10100	11400	12400	13000	13000
600	24	386	734	1060	1390	1800	2380	3170	4210	5500	7000	8700	10600	12500	14500	16500	17900	18800	18800
700	28	559	1060	1530	2010	2610	3450	4590	6100	7960	10100	12600	15300	18200	21100	23900	25900	27200	27200
750	30	630	1200	1720	2270	2940	3880	5160	6870	8960	11400	14200	17200	20400	23700	28900	29200	30700	30700
800	32	719	1370	19710	2590	3360	4440	5900	7840	10200	13000	16200	19700	23300	27100	30700	33300	35000	35000
900	36	884	1680	2420	3180	4120	5450	7250	9630	12600	16000	19900	24200	28700	33300	37700	40900	43000	43000
1000	40	1170	2220	3190	4210	5450	7210	9580	12700	16600	21200	26300	31900	37900	44000	49800	54100	56900	56900
1050	42	1230	2340	3370	4440	5760	7610	10100	13400	17600	22400	27800	33700	40000	46500	52600	57100	60000	60000
1200	48	1640	3120	4490	5920	7670	10100	13500	17900	23400	29800	37000	45000	53400	61900	70100	76100	80000	80000

300LB MANUAL GEAR OPERATING TYPE

SIZE		5°	10°	15°	20°	25°	30°	35°	40°	45°	50°	55°	60°	65°	70°	75°	80°	85°	90°
mm	inch																		
80	3	1	6	14	23	31	39	47	54	62	71	82	96	112	128	143	156	163	165
100	4	2	12	26	42	57	72	85	98	113	130	150	176	205	234	262	285	299	302
150	6	6	25	41	54	69	91	121	162	212	268	334	407	482	559	634	689	725	725
200	8	11	45	74	98	126	166	222	298	389	492	613	746	884	1030	1160	1260	1330	1330
250	10	19	82	135	178	229	301	402	540	705	891	1110	1350	1600	1860	2110	2290	2410	2410
300	12	29	122	202	266	342	450	601	807	1050	1330	1660	2020	2400	2780	3150	3420	3600	3600
350	14	39	167	274	363	466	613	818	1100	1430	1810	2260	2750	3260	3780	4290	4660	4900	4900
400	16	58	248	408	539	692	910	1220	1630	2130	2690	3360	4090	4840	5610	6370	6920	7280	7280
450	18	77	326	537	710	911	1200	1600	2150	2810	3550	4420	5380	6380	7400	83920	9110	9590	9590
500	20	95	403	663	876	1130	1480	1980	2650	3460	4380	5460	6640	7880	9130	10400	11300	11800	11800
600	24	136	580	955	1260	1620	2130	2850	3820	4990	6310	7860	9570	11300	13100	14900	16200	17100	17100
700	28	199	844	1390	1840	2360	3100	4150	5560	7260	9190	11400	13900	16500	19100	21700	23600	24800	24800
750	30	232	986	1620	2150	2750	3620	4840	6490	8480	10700	13400	16300	19300	22400	25400	27500	29000	29000
800	32	261	1110	1830	2420	3100	4080	5450	7310	9550	12100	15000	18300	21700	25200	28600	31000	32600	32600
900	36	332	1410	2320	3070	3940	5190	6930	9300	12100	15400	19100	23300	27600	32000	36300	39400	41500	41500
1000	40	399	1700	2790	3690	4740	6230	8330	11200	14600	18400	23000	28000	33200	38400	43600	47400	49900	49900
1050	42	457	1940	3200	4230	5430	7140	9540	12800	16700	21100	26300	32000	38000	44000	50000	54200	57100	57100
1200	48	480	2040	33600	4440	5700	7500	10000	13400	17500	22200	27700	33700	39900	46300	52500	57000	60000	60000

TRIPLE OFFSET BUTTERFLY VALVE DIMENSION TABLE(mm)

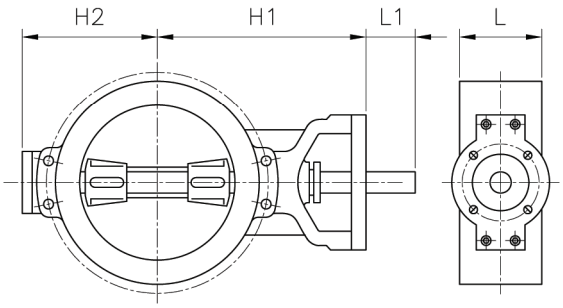

WAFER TYPE

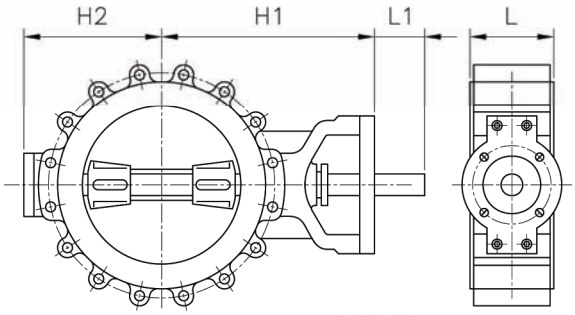

LUG TYPE

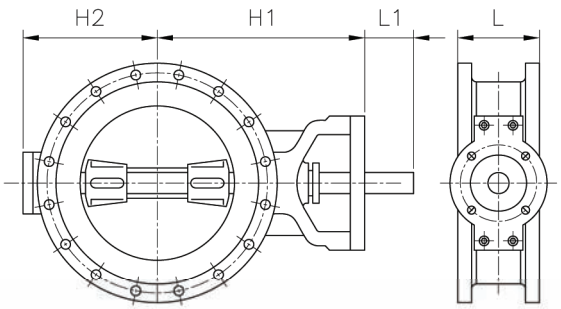

DOUBLE FLANGE TYPE

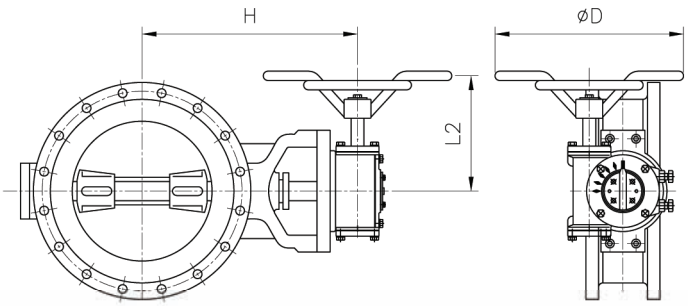

MANUAL GEAR OP

150LB MANUAL GEAR OPERATING TYPE

SIZE		H	H1	H2	L1	1 L (F TO F)			L2	ØD	※WEIGHT:Kg(APPROX)		
mm	inch	APPROX	APPROX	APPROX		WAFER	LUG	FLANGE			WAFER	LUG	FLANGE
80	3		165	127	35	48	48	114	206	300	20	21	32
100	4		200	150	35	54	54	127	206	300	20	21	37
150	6	300	245	180	35	57	57	140	206	300	20	22	48
200	8	310	260	195	35	64	64	152	206	300	45	47	89
250	10	335	285	225	65	71	71	165	206	300	57	61	112
300	12	390	335	265	80	81	81	178	230	400	85	91	161
350	14	420	365	290	80	92	92	190	230	400	133	142	228
400	16	500	435	340	80	102	102	216	279	450	186	199	303
450	18	515	452	360	80	114	114	222	279	450	213	229	364
500	20	565	500	395	80	127	127	229	312	560	334	364	499
600	24	635	570	465	110	154	154	267	312	560	455	492	699
700	28	775	685	570	130	165	165	292	371	630	718	777	860
750	30	785	695	600	130	165	165	318	371	630	864	934	1085
800	32	840	750	630	130	190	190	318	425	710	1090	1119	1241
900	36	910	820	690	160	200	200	330	425	710	1418	1553	1716
1000	40	925	835	720	175	216	216	410	425	710	1743	1943	2208
1050	42	980	860	750	175	251	251	410	513	800	2108	2343	2488
1200	48	1140	1020	845	200	276	276	470	513	800	3004	3284	3440

FLANGE RATING-ACCORDING TO ANSI B 16.5 / ASME 16.47 SERIES "A" & "B" / DIN / BS / JIS / USER SPEC
※1 FACE TO FACE DIMENSION-ACCORDING TO MAKER STANDARD.
※2 EXCEPT ACTUATOR

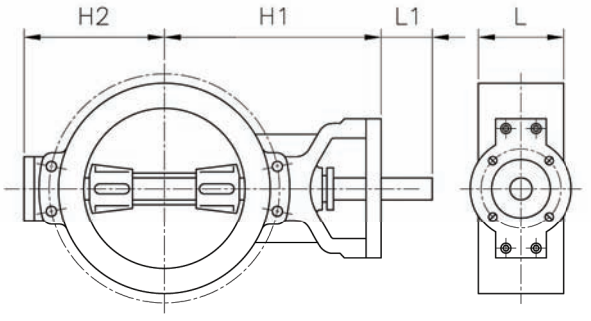

WAFER TYPE

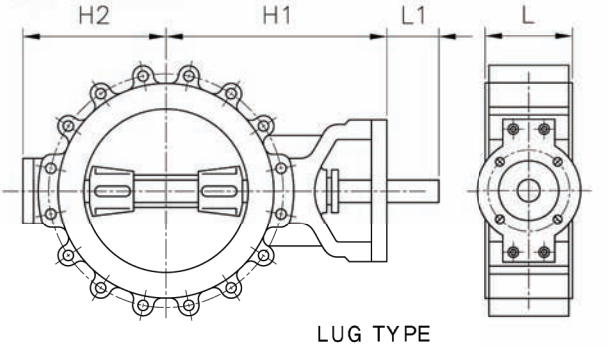

LUG TYPE

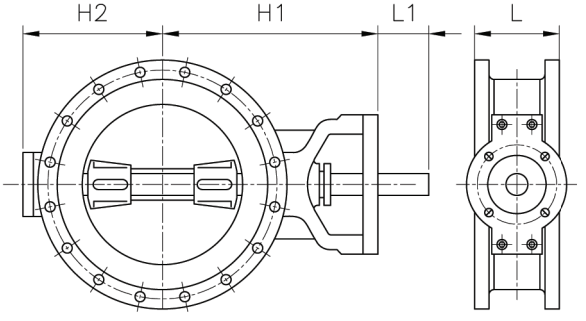

DOUBLE FLANGE TYPE

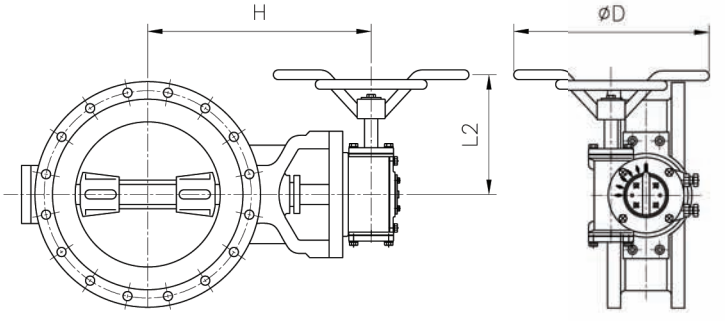

MANUAL GEAR OP

300LB MANUAL GEAR OPERATING TYPE

SIZE		H	H1	H2	L1	1 L (F TO F)			L2	ØD	※WEIGHT Kg(APPROX)		
mm	inch	APPROX	APPROX	APPROX		WAFER	LUG	FLANGE			WAFER	LUG	FLANGE
80	3		165	127	35	40	48	114	206	300	20	21	36
100	4		200	151	35	54	54	127	206	300	20	21	46
150	6	330	280	199	65	59	59	140	206	300	36	39	76
200	8	350	295	218	80	73	73	152	230	400	51	56	93
250	10	395	340	251	80	83	83	165	230	400	100	112	164
300	12	450	395	296	80	92	92	178	230	400	134	150	222
350	14	490	425	331	80	117	117	190	279	450	196	229	298
400	16	545	480	377	110	133	133	216	279	450	232	277	357
450	18	605	540	410	110	149	149	222	312	560	360	433	499
500	20	645	580	440	130	159	159	229	312	560	457	549	621
600	24	740	650	515	130	181	181	267	371	630	670	805	916
700	28	910	820	640	200	229	229	292	371	630	1193	1363	1417
750	30	940	850	690	200	241	241	318	425	710	1463	1658	1715
800	32	970	880	720	200	241	241	318	425	710	1661	1856	1957
900	36	1050	960	780	200	260	260	330	425	710	2281	2511	2590
1000	40	1110	990	800	200	300	300	410	513	800	2214	2425	2585
1050	42	1160	1050	840	200	300	300	410	513	800	2439	2649	2849
1200	48	1270	1150	950	250	320	320	470	536	900	3384	3684	4106

FLANGE RATING-ACCORDING TO ANSI B 16.5 / ASME 16.47 SERIES "A" & "B" / DIN / BS / JIS / USER SPEC
※1 FACE TO FACE DIMENSION-ACCORDING TO MAKER STANDARD.
※2 EXCEPT ACTUATOR

TRIPLE OFFSET BUTTERFLY VALVE DIMENSION TABLE(mm)

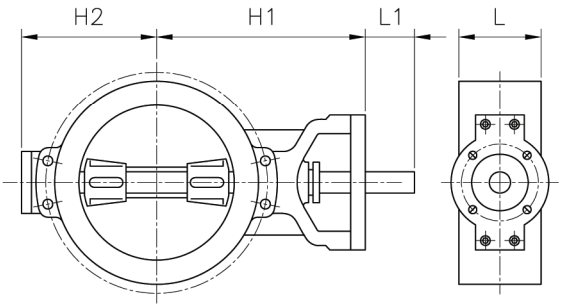

WAFER TYPE

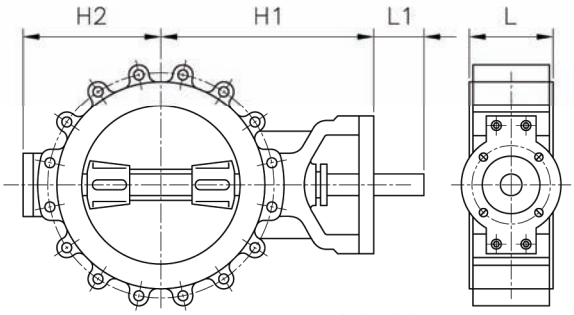

LUG TYPE

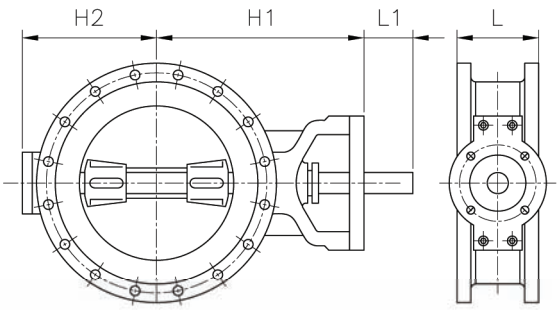

DOUBLE FLANGE TYPE

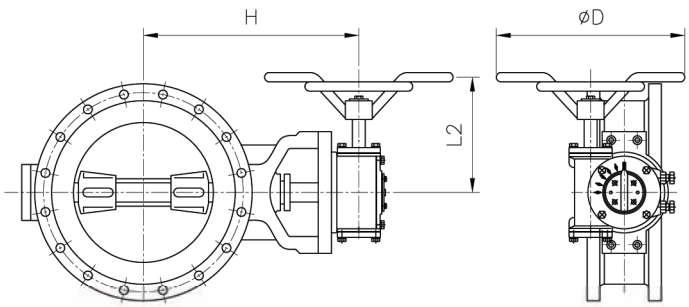

MANUAL GEAR OP

600LB MANUAL GEAR OPERATING TYPE

SIZE		H	H1	H2	L1	1 L (F TO F)			L2	ØD	※WEIGHT:Kg(APPROX)		
mm	inch	APPROX	APPROX	APPROX		WAFER	LUG	FLANGE			WAFER	LUG	FLANGE
80	3		210	154	45	54	54	180	230	400	15	16	43
100	4		215	166	45	64	64	190	230	400	28	30	69
150	6	365	310	238	80	78	78	210	230	400	65	72	135
200	8	380	325	248	80	102	102	230	230	400	92	102	162
250	10	465	400	316	80	117	117	250	279	450	134	187	268
300	12	520	455	349	110	140	140	270	312	560	224	259	369
350	14	535	470	374	110	155	155	290	312	560	285	329	364
400	16	675	585	474	130	178	178	310	371	630	455	520	632
450	18	715	625	476	130	200	200	330	371	630	555	635	739
500	20	760	670	504	130	216	216	350	425	710	694	804	879
600	24	840	750	55	180	232	232	390	425	710	1093	1243	1423
700	28	PLEASE CONTACT THE SALES OFFICE.											
750	30												
800	32												
900	36												
1000	40												
1050	42												
1200	48												

FLANGE RATING-ACCORDING TO ANSI B 16.5 / ASME 16.47 SERIES "A" & "B" / DIN / BS / JIS / USER SPEC
※1 FACE TO FACE DIMENSION-ACCORDING TO MAKER STANDARD.
※2 EXCEPT ACTUATOR

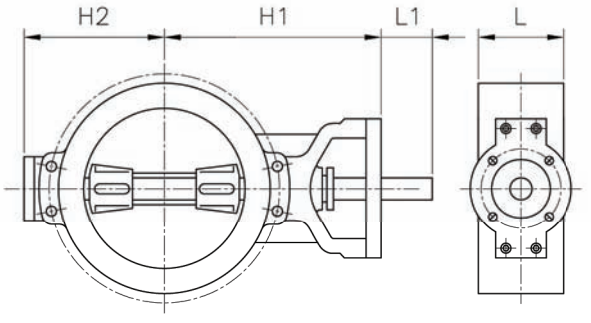

WAFER TYPE

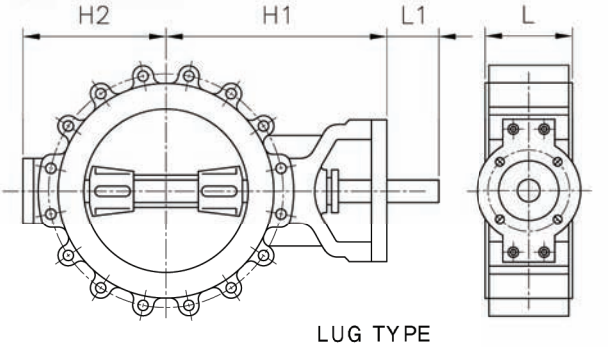

LUG TYPE

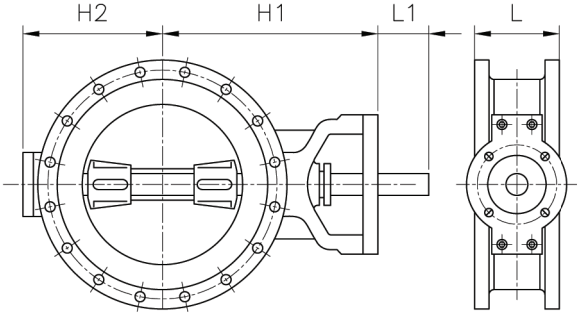

DOUBLE FLANGE TYPE

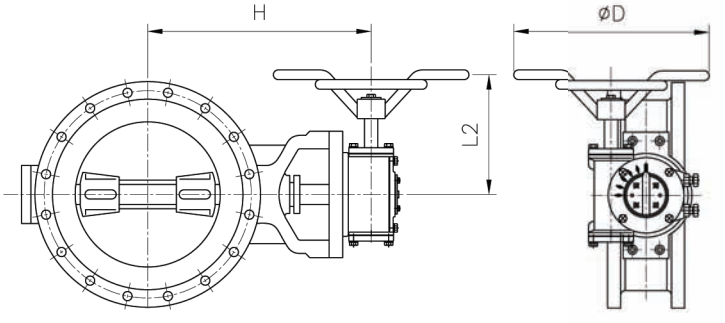

MANUAL GEAR OP

900LB MANUAL GEAR OPERATING TYPE

SIZE		H	H1	H2	L1	1 L (F TO F)			L2	ØD	※WEIGHT Kg(APPROX)		
mm	inch	APPROX	APPROX	APPROX		WAFER	LUG	FLANGE			WAFER	LUG	FLANGE
150	6	400	335	238	80	104	104	250	279	450	89	100	184
200	8	445	380	281	80	112	112	310	312	560	134	151	256
250	10	500	435	358	110	135	135	350	312	560	224	256	425
300	12	590	500	383	110	170	170	380	371	630	298	352	496
350	14	635	545	419	130	173	173	400	371	630	376	440	656
400	16	730	640	455	130	210	210	430	425	710	570	663	834
450	18	780	690	503	180	228	228	460	425	710	691	824	1044
500	20	830	710	550	180	250	250	490	513	800	905	1069	1273
600	24	950	820	656	200	275	275	530	513	800	1317	1704	2506
700	28	PLEASE CONTACT THE SALES OFFICE.											
750	30												
800	32												
900	36												
1000	40												
1050	42												
1200	48												

FLANGE RATING-ACCORDING TO ANSI B 16.5 / ASME 16.47 SERIES "A" & "B" / DIN / BS / JIS / USER SPEC
※1 FACE TO FACE DIMENSION-ACCORDING TO MAKER STANDARD.
※2 EXCEPT ACTUATOR

TRIPLE OFFSET BUTTERFLY VALVE DIMENSION TABLE(mm)

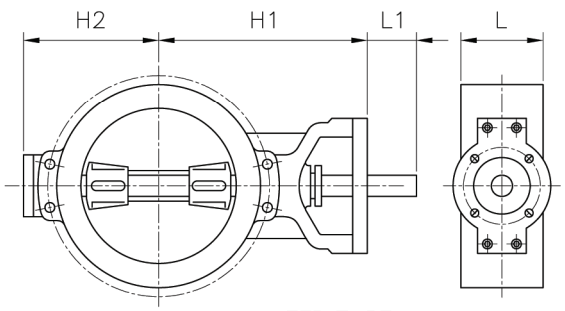

WAFER TYPE

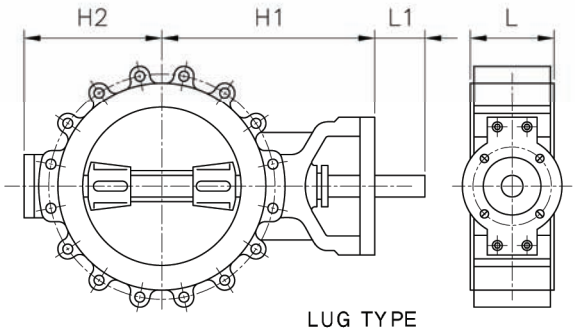

LUG TYPE

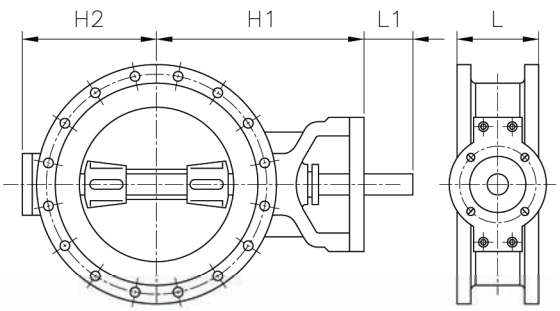

DOUBLE FLANGE TYPE

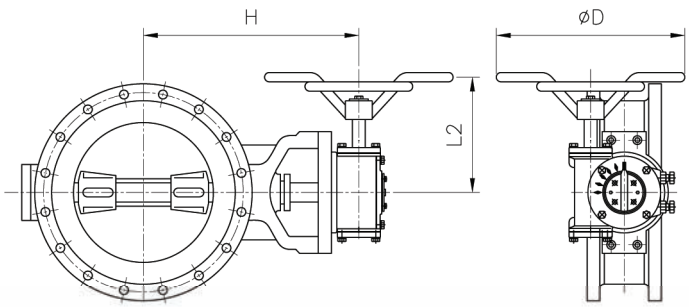

MANUAL GEAR OP

1500LB MANUAL GEAR OPERATING TYPE

SIZE		H	H1	H2	L1	1 L (F TO F)			L2	ØD	※WEIGHT:Kg(APPROX)		
mm	inch	APPROX	APPROX	APPROX		WAFER	LUG	FLANGE			WAFER	LUG	FLANGE
150	6	435	370	257	110	160	160	290	312	560	124	175	207
200	8	520	430	307	110	180	180	330	371	630	202	237	406
250	10	630	540	371	130	200	200	390	371	630	282	379	646
300	12	665	575	414	130	230	230	430	425	710	360	605	842
350	14	740	650	493	180	250	250	470	425	710	589	849	1163
400	16	820	700	530	200	265	265	510	513	800	614	995	1476
450	18	920	800	591	200	300	300	550	513	800	992	1478	1968
500	20	975	850	664	200	340	340	630	536	900	1597	2248	2782
600	24	1125	1000	780	250	400	400	710	536	900	1792	3021	4288
700	28	PLEASE CONTACT THE SALES OFFICE.											
750	30												
800	32												
900	36												
1000	40												
1050	42												
1200	48												

FLANGE RATING-ACCORDING TO ANSI B 16.5 / ASME 16.47 SERIES "A" & "B" / DIN / BS / JIS / USER SPEC
※1 FACE TO FACE DIMENSION-ACCORDING TO MAKER STANDARD.
※2 EXCEPT ACTUATOR

LEAKAGE RATE BY STANDARD(REFERENCE)

■GAS TEST

Valve Size:200mm, Unit:cc/min

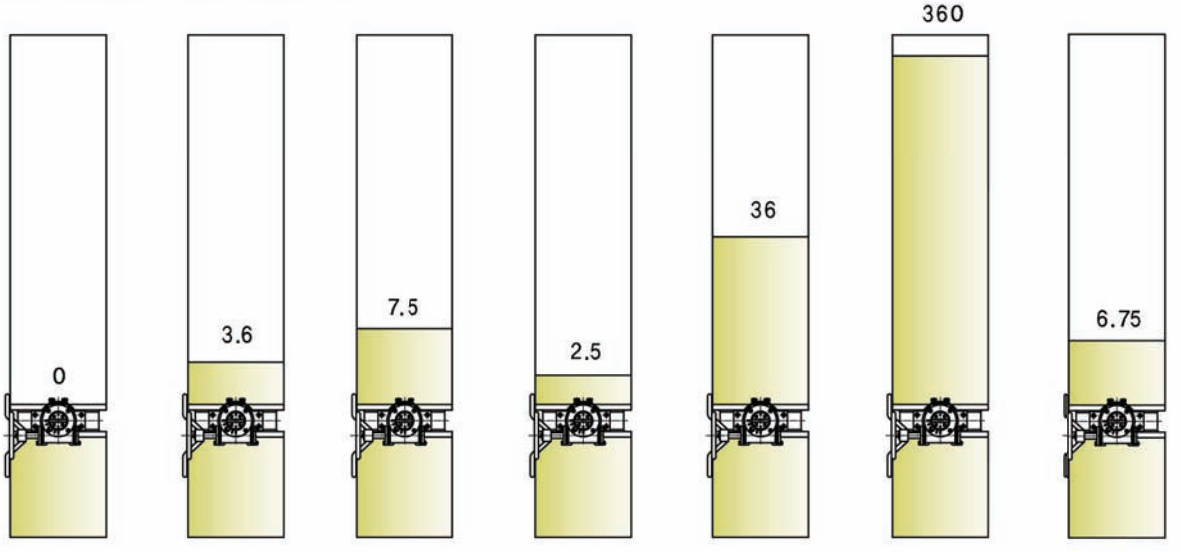

Std	ISO 5208 RATE A	ISO 5208 RATE B	API 598	API 598	ISO 5208 RATE C	ISO 5208 RATE D	ANSI B 16, 105 CLASS VI
Press	6±1bar	6±1bar	4~7bar	4~7bar	6±1bar	6±1bar	

■HYDROSTATIC TEST

Valve Size:200mm, Unit:cc/min

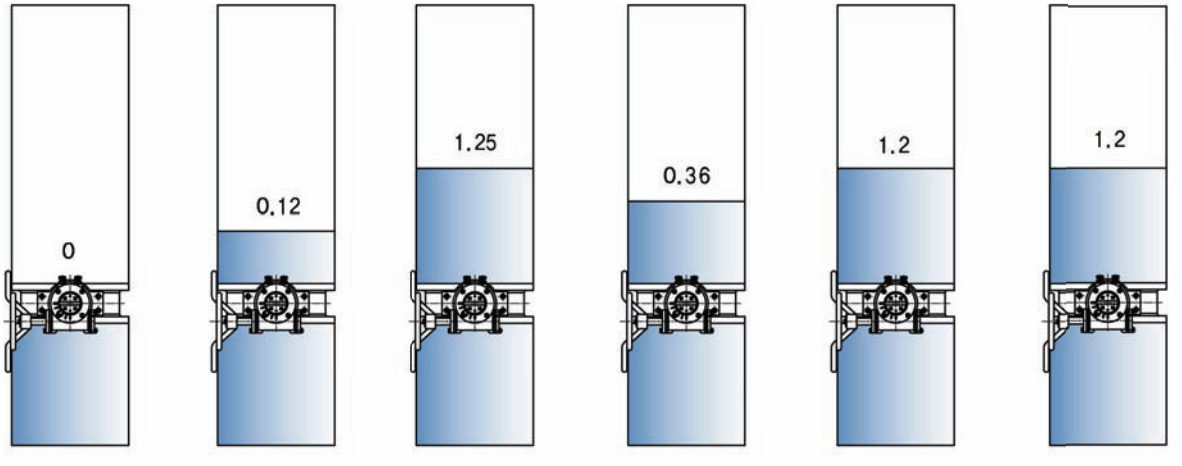

Std	ISO 5208 RATE A	ISO 5208 RATE B	API 598	ISO 5208 RATE C	ISO 5208 RATE D	ANSI B 16, 105 CLASS VI
Press	Max. working Pressure×1.1	Max. working Pressure ×1.1	Design Pressure ×1.1	Max. working Pressure×1.1	Max. working Pressure ×1.1	Max. working Pressure(20bar)

CRYOGENIC/HIGH TEMP BUTTERFLY VALVE DESIGN FEATURES

PRODUCT

- RESILIENT SEAT BUTTERFLY
- METAL SEAT BUTTERFLY
- TRIPLE OFFSET TYPE
- HI-PERFORMANCE TYPE
- CONCENTRIC TYPE
- FLANGE, LUG, WAFER, WELDED
- API609 RESISTRATION
- ALL BUTTERFLY VALVES

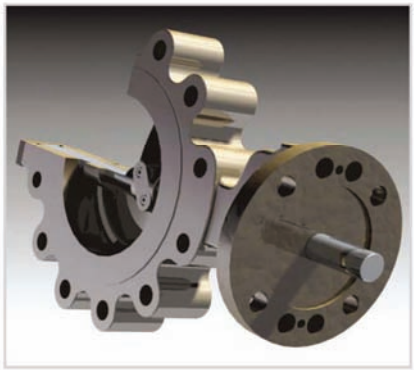

CRYOGENIC / HIGH TEMP LUGGED TYPE

SIZE RANGE

- DN150~DN4000

PRESSURE RATING

- ANSI150LB-900LB
- DIN/BS PN6~PN100
- JIS/KS
- ETC

TEMPERATURE RATING

- FROM -196℃ TO 800℃
  (FROM -320.8℉ TO 1472℉)

CRYOGENIC TESTER

DAEHAN CONTROL's equipments for EXTREMELY LOW TEMPERATURE can maximize its test abilities by detecting various kinds of distortions and leakages of valves in condition of extremely low temperature through the real time data from external monitor.

QUALITY ASSURANCE SYSTEM

- ISO9001
- API609/6D/Q1

TRIPLE OFFSET SEAT (CRYOGENIC/HIGH TEMP)

CRYOGENIC PCTFE LAMINATED SEAT type triple offset valve can secure its sealing from leakage in sealing parts by its resilient adjustment of CRYOGENIC PCTFE LAMINATED SEAT in case of contractions in EXTREMELY LOW TEMPERATURE.

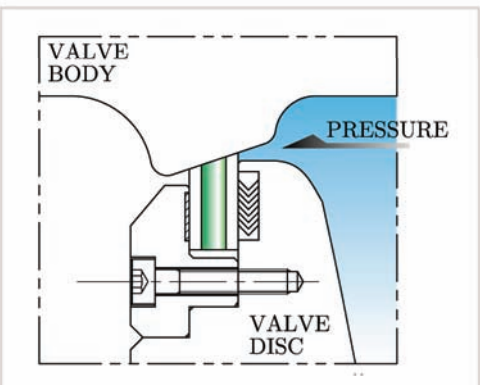

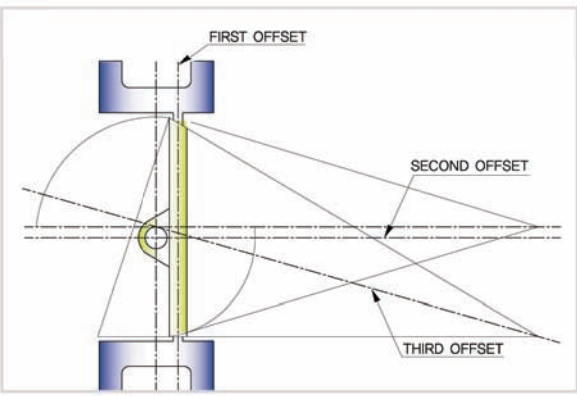

ANALYSIS(CRYOGENIC/ HIGH TEMP) FEMAP WITH NX NASTRAN (TMG)

The destruction and leakages caused by heat distortion could be shut off by analytical researches of heat distribution and distortion, which is accompanied by various simulations resembled real situation.

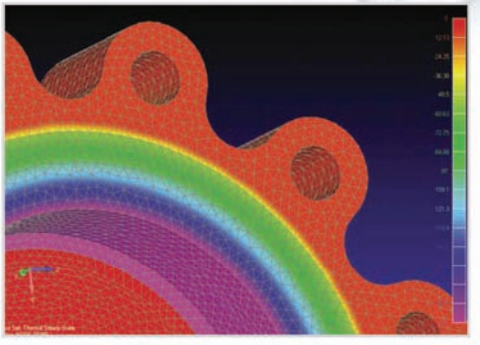

DESIGN FEATURE

CRYOGENIC/HIGH TEMP VALVES are designed to satisfy customers needs for valve of EXTREME WORKING CONDITION by our experienced engineers

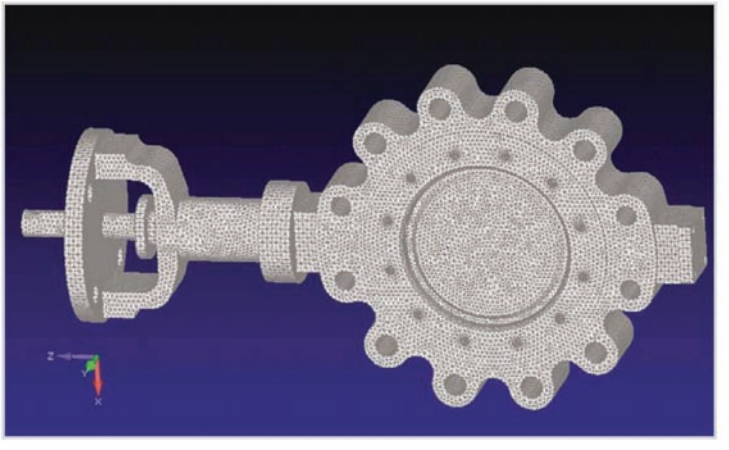

CAVITATION FREE

It is needed to stop fluid flows when installing or separating a actuator at its open position. However, valve with CAVITATION HOLDER can remove vibrations of valve in its open position.
It is possible to attach this device to almost all valves with small installation spaces.

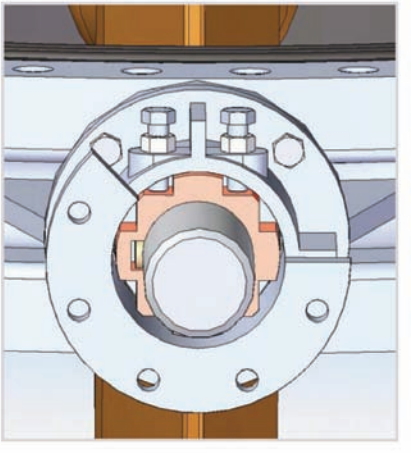

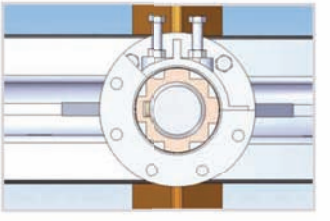

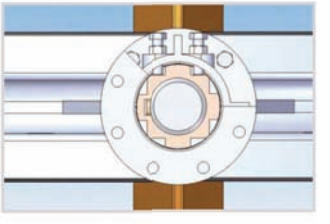

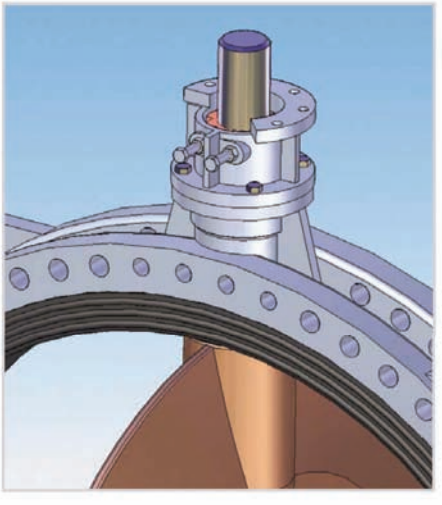

CAVITATION HOLDER CONNECTING DIMENSION

- VALVE SIZE(1050A~4000A)
- FASTENING AREAS OF VALVE : ISO5210/5211 STANDARD
- FASTENING AREAS OF ACTUATOR : ISO5210/5211 STANDARD
- Changeable if required.

※ CONCENTRIC BUTTERFLY VALVE WITH CAVITATION HOLDER

CRYOGENIC/HIGH TEMP BUTTERFLY VALVE DIMENSION TABLE(mm)

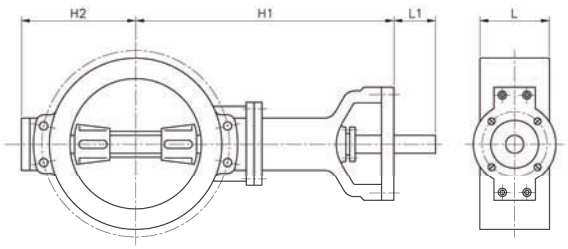

WAFER TYPE

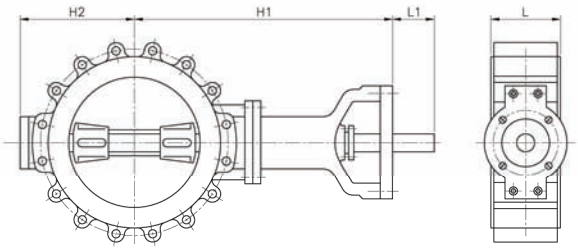

LUG TYPE

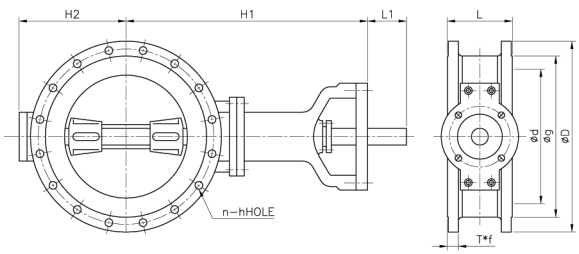

FLANGE TYPE

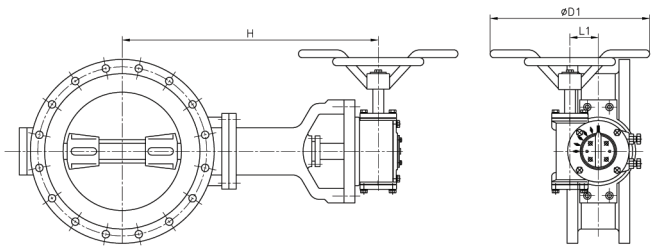

FLANGE GO TYPE

150LB MANUAL GEAR OPERATING TYPE

SIZE		d	FLANGE						H1	H2	H	L(FACE TO FACE)			L1	L2	D1	MINIUM BODY WALL THICKNESS
DIAMETAL			PCD C	a	h HOLE h TAP	t×f	g	D				WEFER	LUG	FLANGE				
80	3	80	152.5	4	19 5/8	22.3×1.6	127	190	315	127	370	48	48	114	35	206	300	5.6
100	4	100	190.5	8	19 5/8	22.3×1.6	157	229	350	150	405	54	54	127	35	206	300	6.4
150	6	150	241.5	8	22 3/4	23.8×1.6	216	279	395	180	450	57	57	140	35	206	300	7.1
200	8	200	298.5	8	22 3/4	27×1.6	270	343	440	195	490	64	64	152	35	206	300	7.9
250	10	250	362.0	12	25 7/8	28.6×1.6	324	406	465	225	515	71	71	165	65	206	300	8.6
300	12	300	432.0	12	25 7/8	30.2×1.6	381	483	635	265	590	81	81	178	80	230	400	9.7
350	14	350	476.5	12	29 1	33.4×1.6	413	533	565	290	620	92	92	190	80	230	400	10.7
400	16	400	539.5	16	29 1	35×1.6	470	597	635	340	700	102	102	216	80	279	450	11.4
450	18	450	578.0	16	32 1 1/8	38.1×1.6	533	635	702	360	765	114	114	220	80	279	450	12.2
500	20	500	635.0	20	32 1 1/8	41.3×1.6	584	698	750	395	825	127	127	229	80	312	560	13
600	24	600	749.5	20	35 1 1/4	46.1×1.6	692	813	820	465	885	154	154	267	110	312	560	14.7
700	28	700	863.5	28	35 1 1/4	69.8×1.6	800	927	1035	570	1125	165	165	292	130	371	630	16.3
750	30	750	914.5	28	35 1 1/4	73.1×1.6	857	984	1045	600	1135	165	165	318	130	371	630	17
800	32	800	978.0	28	41 1 1/2	79.4×1.6	914	1060	1100	630	1190	190	190	318	130	425	710	18
900	36	900	1086.0	32	41 1 1/2	88.8×1.6	1022	1168	1170	690	1260	200	200	330	160	425	710	19.6
1000	40	1000	1200.0	36	41 1 1/2	88.8×1.6	1024	1289	1335	720	1425	216	216	410	175	425	710	21.3
1050	42	1050	1257.5	36	41 1 1/2	95.2×1.6	1194	1346	1360	750	1480	251	251	410	175	513	800	22.1
1200	48	1200	1422.5	44	41 1 1/2	106.4×1.6	1359	1511	1520	845	1640	276	276	470	200	513	800	24.6
1250	50	1250	1428.8	44	48 1 3/4	111.3×1.6	1409.7	1568.5	1665	895	1850	350	350	470	200	513	900	25.4
1300	52	1300	1479.6	44	48 1 3/4	115.8×1.6	1460.5	1625.6	1695	925	1880	350	350	470	200	513	900	26.2
1350	54	1350	1549.4	44	48 1 3/4	120.7×1.6	1511.3	1682.8	1850	950	2035	350	350	470	200	513	900	27.2
1400	56	1400	1600.2	48	48 1 3/4	124×1.6	1574.8	1746.3	1875	985	2070	390	390	530	210	605	1000	28.2
1450	58	1450	1651	48	48 1 3/4	128.5×1.6	1625.6	18.3.4	1900	1015	2095	390	390	530	210	605	1000	29
1500	60	1500	1701.8	52	48 1 3/4	131.8×1.6	1676.4	1854.2	1930	1040	2125	390	390	530	210	605	1000	30

FLANGE RATING-ACCORDING TO ANSI B 16.5/ASME 16.47 SERIES "A" & "B"/DIN/BS/JIS/USER SPEC
※1 FACE TO FACE DIMENSION-ACCORDING TO MAKER STANDARD.
※2 EXCEPT ACTUATOR

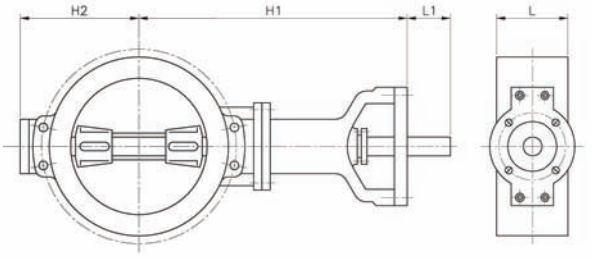

WAFER TYPE

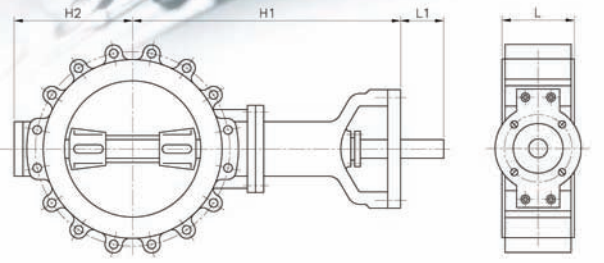

LUG TYPE

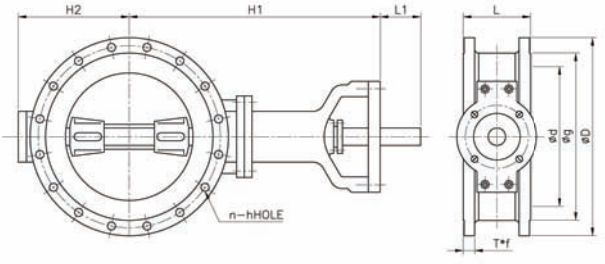

FLANGE TYPE

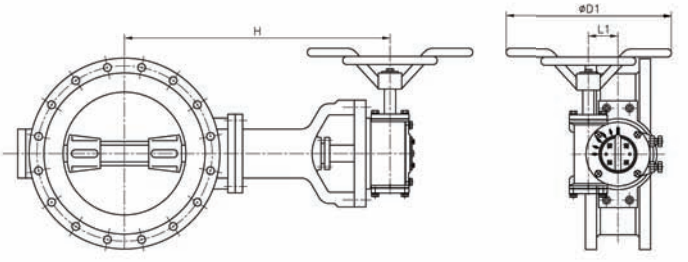

FLANGE GO TYPE

300LB MANUAL GEAR OPERATING TYPE

SIZE		d	FLANGE						H1	H2	H	L(FACE TO FACE)			L1	L2	D1	MINIUM BODY WALL THICKNESS
DIAMETAL			PCD C	a	h HOLE h TAP	t×f	g	D				WEFER	LUG	FLANGE				
80	3	80	168	8	22 3/4	27×1.6	127	210	315	127	370	48	48	114	65	206	300	7.11
100	4	100	200	8	22 3/4	30.2×1.6	157	254	350	151	405	54	54	127	65	206	300	7.9
150	6	150	270	12	22 3/4	35×1.6	216	318	430	199	430	59	59	140	65	206	300	9.7
200	8	200	350	12	25 7/8	39.7×1.6	270	381	475	218	530	73	73	152	80	230	400	11.2
250	10	250	387	16	29 1	45.8×1.6	324	444	520	251	575	83	83	165	80	230	400	12.7
300	12	300	451	16	32 1 1/8	49.2×1.6	381	521	595	296	650	92	92	178	80	230	400	14.2
350	14	350	514.5	20	32 1 1/8	52.4×1.6	413	584	625	331	690	117	117	190	80	279	450	16.5
400	16	400	571.5	20	35 1 1/8	55.6×1.6	470	648	680	377	745	133	133	216	110	279	450	18
450	18	450	628.5	24	32 1 1/4	58.8×1.6	533	711	790	410	855	149	149	222	110	312	560	19.8
500	20	500	686	24	32 1 1/4	61.9×1.6	584	775	830	440	895	159	159	229	130	312	560	21.3
600	24	600	813	24	41 1 1/4	68.3×1.6	692	914	900	513	990	181	181	267	130	371	630	24.6
700	28	700	940	28	44.5 1 5/8	84.3×1.6	800	1035	1170	640	1260	229	229	292	200	371	630	28
750	30	750	997	28	48 1 3/4	90.3×1.6	857	1092	1200	690	1290	241	241	318	200	425	710	29.7
800	32	800	1054	28	51 1 7/8	96.9×1.6	914	1149	1230	720	1320	241	241	318	200	425	710	31.2
900	36	900	1168.5	32	54 2	103×1.6	1022	1270	1310	780	1400	260	260	330	200	425	710	34.8
1000	40	1000	1156	32	44.5 1 5/8	112.7×1.6	1086	1238	1490	800	1610	300	300	410	200	513	800	38.1
1050	42	1050	1206.5	32	44.5 1 5/8	117.5×1.6	1136	1289	1550	840	1660	300	300	410	200	513	800	39.6
1200	48	1200	1327	32	51 1 7/8	131.7×1.6	1301	1467	1650	950	1770	320	320	470	250	536	900	44.7
1250	50	1250	1428.8	32	54 2	139.7×1.6	1358.9	1530.4	1665	895	1860	350	350	470	210	625	1000	46.5
1300	52	1300	1479.6	32	54 2	144.5×1.6	1409.7	1581.2	1695	925	1890	350	350	470	210	625	1000	48.3
1350	54	1350	1549.4	28	60.5 2 1/4	152.4×1.6	1466.9	1657.4	1850	950	2045	350	350	470	210	625	1000	50.0
1400	56	1400	1600.2	28	60.5 2 1/4	154×1.6	1517.7	1708.2	1875	985	2080	390	390	530	220	718	1000	51.8
1450	58	1450	1651	32	60.5 2 1/4	158.8×1.6	1574.8	1759	1900	1015	2105	390	390	530	220	718	1000	53.6
1500	60	1500	1701.8	32	60.5 2 1/4	163.6×1.6	1625.6	1809.8	1930	1040	2135	390	390	530	220	718	1000	55.4

FLANGE RATING-ACCORDING TO ANSI B 16.5 / ASME 16.47 SERIES "A" & "B" / DIN / BS / JIS / USER SPEC

※1 FACE TO FACE DIMENSION-ACCORDING TO MAKER STANDARD.

※2 EXCEPT ACTUATOR

CRYOGENIC/HIGH TEMP BUTTERFLY VALVE DIMENSION TABLE(mm)

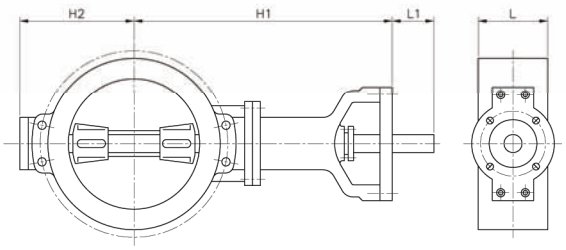

WAFER TYPE

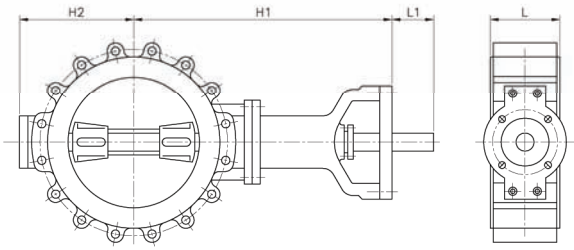

LUG TYPE

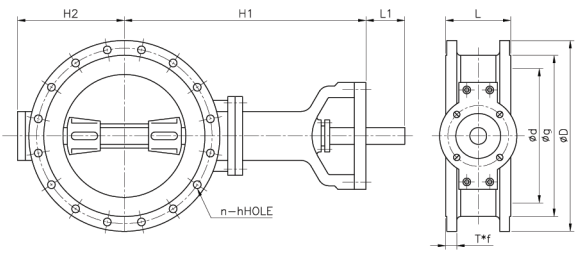

FLANGE TYPE

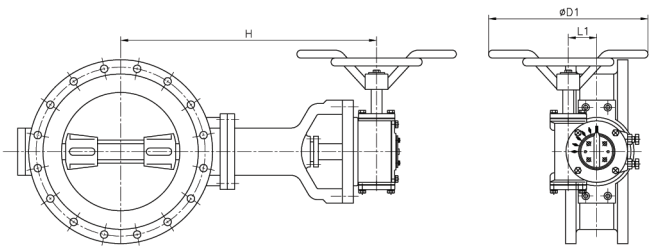

FLANGE GO TYPE

600LB MANUAL GEAR OPERATING TYPE

SIZE		d	FLANGE						H1	H2	H	L(FACE TO FACE)			L1	L2	D1	MINIUM BODY WALL THICKNESS
DIAMETAL			PCD C	a	h HOLE h TAP	t×f	g	D				WEFER	LUG	FLANGE				
80	3	80	168	8	34 3/4	31.7×4	127	210	360	154	415	54	54	180	80	230	400	7.9
100	4	100	200	8	35 7/8	38.1×4	157	273	365	166	420	64	64	190	80	230	400	9.7
150	6	150	292	12	28.5 1	47.8×4	216	356	460	238	515	78	78	210	80	230	400	12.7
200	8	200	349.5	12	32 1 1/8	55.6×4	270	419	505	248	560	102	102	230	80	230	400	16
250	10	250	432	16	35 1 1/4	63.5×4	324	508	580	316	645	117	117	250	80	279	450	19.6
300	12	300	489	20	35 1 1/4	66.5×4	381	559	655	349	720	140	140	270	110	312	560	23.4
350	14	350	527	20	38 1 3/8	69.8×4	413	603	670	374	735	155	155	290	110	312	560	26.2
400	16	400	603	20	41 1 1/2	76.2×4	470	686	785	474	875	178	178	310	130	371	630	30
450	18	450	654	20	44.5 1 5/8	82.6×4	533	743	875	476	965	200	200	330	130	371	630	33.3
500	20	500	724	24	44.5 1 5/8	88.9×4	584	813	920	504	1010	216	216	350	130	425	710	37
600	24	600	838.5	24	51 1 7/8	101.6×4	692	940	1000	550	1090	232	232	390	180	425	710	43.7

FLANGE RATING-ACCORDING TO ANSI B 16.5 / ASME 16.47 SERIES "A" & "B" / DIN/ BS/ JIS / USER SPEC
※1 FACE TO FACE DIMENSION-ACCORDING TO MAKER STANDARD.
※2 EXCEPT ACTUATOR

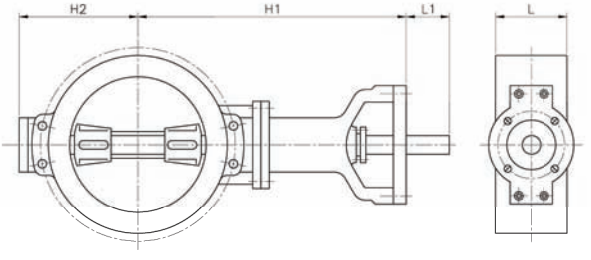

WAFER TYPE

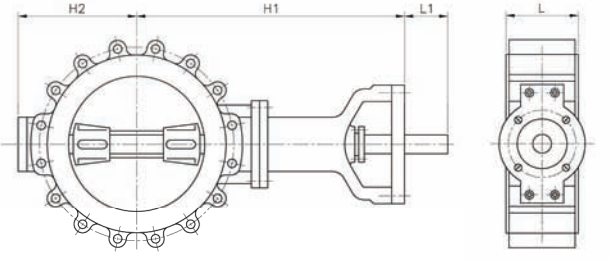

LUG TYPE

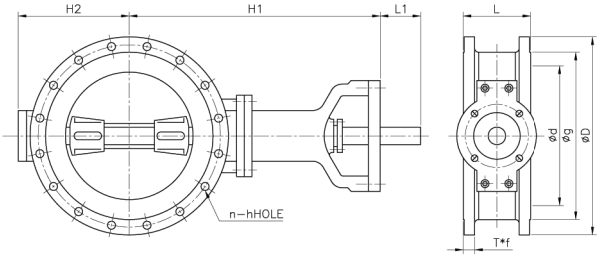

FLANGE TYPE

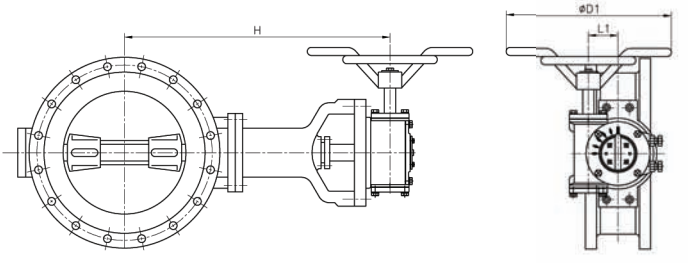

FLANGE GO TYPE

900LB MANUAL GEAR OPERATING TYPE

SIZE		d	FLANGE						H1	H2	H	L(FACE TO FACE)			L1	L2	D1	MINIUM BODY WALL THICKNESS
DIAMETAL			PCD C	a	h HOLE h TAP	t×f	g	D				WEFER	LUG	FLANGE				
150	6	150	317.5	12	32 1 1/8	55.6×4	216	381	485	238	550	104	104	250	80	279	450	18.8
200	8	200	393.7	12	38 1 3/8	63.5×4	270	469.9	560	281	625	112	112	310	80	312	560	23.6
250	10	250	469.9	16	38 1 3/8	69.9×4	324	546.1	615	358	680	135	135	350	110	312	560	28.7
300	12	300	533.4	20	38 1 3/8	79.3×4	381	609.6	700	383	790	170	170	380	110	371	630	34.3
350	14	350	558.8	20	41 1 1/2	85.9×4	413	641.4	745	419	835	173	173	400	130	371	630	39.6
400	16	400	616	20	44.5 1 5/8	88.9×4	470	704.9	840	455	930	210	210	430	130	425	710	45
450	18	450	685.8	20	51 1 7/8	101.6×4	533	787.4	940	503	1030	228	228	460	180	425	710	49.8
500	20	500	749.3	20	54 2	108×4	584	857.3	960	550	1080	250	250	490	180	513	800	55.1
600	24	600	901.7	20	66.5 2 1/2	139.7×4	692	1041.4	1070	656	1200	275	275	530	200	513	800	66.3

FLANGE RATING-ACCORDING TO ANSI B 16.5 / ASME 16.47 SERIES "A" & "B" / DIN / BS / JIS / USER SPEC
※1 FACE TO FACE DIMENSION-ACCORDING TO MAKER STANDARD.
※2 EXCEPT ACTUATOR

CRYOGENIC/HIGH TEMP BUTTERFLY VALVE DIMENSION TABLE(mm)

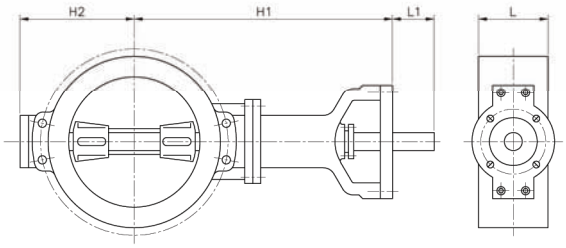

WAFER TYPE

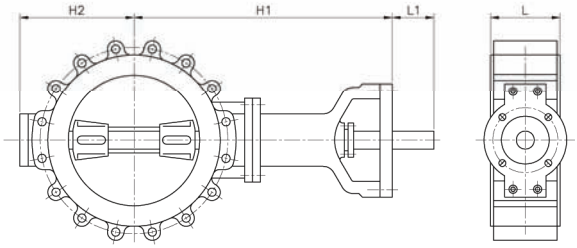

LUG TYPE

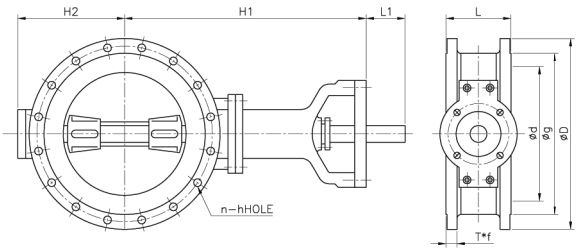

FLANGE TYPE

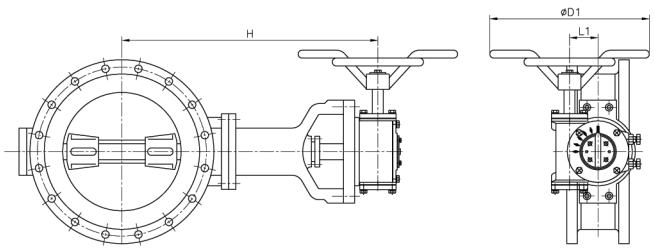

FLANGE GO TYPE

1500LB MANUAL GEAR OPERATING TYPE

SIZE		d	FLANGE						H1	H2	H	L(FACE TO FACE)			L1	L2	D1	MINIUM BODY WALL THICKNESS
DIAMETAL			PCD C	a	h HOLE h TAP	t×f	g	D				WEFER	LUG	FLANGE				
150	6	150	317.5	12	38.1 1 3/8	82.6×4	216	393.7	370	257	435	160	160	290	110	312	560	30.8
200	8	200	393.7	12	44.5 1 5/8	91.9×4	270	482.6	430	307	520	180	180	330	110	371	630	40.4
250	10	250	482.6	12	51 1 7/8	108×4	324	584.2	540	371	630	200	200	390	130	371	630	49.3
300	12	300	571.5	16	54 2	124×4	381	673.1	575	414	665	230	230	430	130	425	710	58.7
350	14	350	635	16	60.5 2 1/4	133.4×4	413	749.3	650	493	740	250	250	470	180	425	710	68.3
400	16	400	704.9	16	66.5 2 1/2	146.1×4	470	825.5	700	530	820	265	265	510	200	513	800	77.7
450	18	450	774.7	16	73 2 3/4	162.1×4	533	914.4	800	591	920	300	300	550	200	513	800	86.9
500	20	500	831.9	16	79 3	177.8×4	584	984.3	850	664	975	340	340	630	200	536	900	96.3
600	24	600	990.6	16	92 3 1/2	203.2×4	692	1168.4	1000	780	1125	400	400	710	250	536	900	115

FLANGE RATING-ACCORDING TO ANSI B 16.5/ASME 16.47 SERIES "A" & "B"/DIN/BS/JIS/USER SPEC
※1 FACE TO FACE DIMENSION-ACCORDING TO MAKER STANDARD.
※2 EXCEPT ACTUATOR

API 6D-0718 ISO9001 / ISO14001 LISTED 수도용 KFI

www.duocheck.co.kr

SOOSUNG
CHECK VALVES

Working on the Basis of Quality and Trust

SSV SOOSUNG Valve

WORKING ON THE BASIS OF QUALITY AND TRUST

GREETINGS

Dear valued customers,

Soosung Valve Industry Co., Ltd. (SSV) was founded in 1999 as a manufacturer of specialty valves and has been producing Dual Plate Wafer Check Valve, Nonslam Nozzle Check Valve, Smolensky Check Valve, Tilting Check Valve, Post Indicator Gate Valve and Dual Foot Valve.

SSV has supplied products for applications ranging from oil and gas refinery to chemical plant, power generation, steel industry, ship building, water systems, pulp and paper mill, etc. Over the past two decades, SSV has grown into one of the leading specialty valve manufacturer in Korea, now aiming at leaping to the one of the world's leading valve maker.

SSV is dedicated to producing quality valves and will focus on achieving greater satisfaction for our customers who has chosen our supplies.

SSV will be striving for this goal and remain a valve manufacturer that specializes in specialty valves.

We look forward to having the chance being of service to you.

SOOSUNG VALVE Ind. Co., Ltd.

COMPANY HISTORY

May. 1999 Established "**Soosung Valve Ind. Co., Ltd.**"

July. 2000 **Approved ISO 9001**, KS 9001 Certificate by BVQ

Feb. 2003 **Started to produce Low temp & Cryogenic service valves**
Selected as a company to produce facilities for Nuclear Power Generation

Aug. 2004 Nominated as "Clean Factory" by KOREA Occupational Safty & Health Agency

May. 2006 Moved to new factory site (Jiyoung-Dong, ilsandong-Gu, Goyang-City)
Approved to use API 6D monogram (Cert. No.: 6D-0718)

May. 2007 Started to produce **Cleaning valves (Pickling & Oxygen service)**

Mar. 2008 Obtained **Fire-safety Certificate to API 607 and API 6FA**
(by Velosi Became a member of Korea International Trade Association)

Jul. 2010 Moved to new factory in Geomdan Industrial Complex in Incheon

Sep. 2012 Trading Division was separated and established as a subsidiary, named "**SSV Coporation**" in Goyang City, Gyeonggi-do

Jan. 2013 **Approved to KC Certificate** by Korean water and sewage Association
(Cert. No.: KCW-2013-0036)

May. 2014 Obtained **UL Certificate**, Registered to **KEPCO**
(Korea Power Engineering Company) E&C Certificate

Mar. 2016 Obtained a certificate of ISO14001 by **OQS**

Jul. 2016 Vendor registered to **Kuwait Oil Company (KOC)**

CONTENTS

QUALITY CERTIFICATES

- ISO 9001-2008 Certificate of Conformance issued by BUREAU VERITAS
- API 6D Monogram / API 594
- FIRE TEST CERTIFICATE issued by VELOSI INTERNATIONAL
- UL listed issued by UL (Post indicator- File EX26420 / Gate valve - File EX26419)
- KFI Certificate issued by Korea Fire Institute (PIV / PIV16-02, PIV16-02-1)

MAIN CUSTOMERS

SAMSUNG ENGINEERING · GS E&C · HYUNDAI ENGINEERING CO., LTD. · SK E&C · KOGAS · EWP · DAELIM · POSCO · DOOSAN · Hanwha Engineering&Construction · KOMIPO · HYUNDAI STEEL · K water · TAKREER · PETRONAS · Orpic · N.I.O.C · Weatherford · TOTAL · Sumitomo Heavy · KOBELCO · MA'ADEN · LUKOIL · Petrofac · sabic · Enppi · EXXON Mobil · JFE Steel · 新日鐵住金

EXAMPLE

TYPE	SIZE	PRESSURE RATING	FLANGE FACING	BODY MATERIAL	PLATE MATERIAL	SEAT MATERIAL	SPRING MATERIAL	SPRING TORQUE
SDV-1	6	A3	R	W	S3	N	X	-
WAFER	6"	150LB	R.F	A216 WCB	A351 CF8	NBR	INCONEL -X750	-

VALVE TYPE

Code	Valve Type
SDV-1	WAFER
SDV-1R	WAFER&RETAINERLESS
SDV-2	FLANGE
SDV-2R	FLANGE&RETAINERLESS
SDV-3	LUG
SDV-3R	LUG&RETAINERLESS
SDV-4	BUTTWELD
SDV-5	HUB END
SDV-1L,2L,3L	RUBBER LINING
BDV-1,2,3	BY-PASS
NCV-1	NOZZLE
TCV-1	TILTING
SFV-1	FOOT (LEVER)
DFV-1	FOOT (DUAL)
SMC-1	SMOLENSKY
PIV-1	POST INDICATOR GATE VALVE
PIV-2	POST INDICATOR GATE VALVE (RUBBER LINING)

Code	Valve Type
SSV-1	SINGLE PLATE (SHORT)
SSV-2	SINGLE PLATE (LONG)

SIZE

SIZE (inch - mm)	
Inch(")	ASME, AWWA & API Standards
mm	KS, JIS & DIN Standards

FLANGE FACING

Code	Face Type	Roughness	Designation
F	Flat Face	63AARH	Smooth Finish
R	Raised Face	125~250AARH	Spiral Serrated
R1	Raised Face	63AARH	Smooth Finish
J	Ring Type Joint	63AARH	Smooth Finish
H	Hub End		
BW	Buttwelding		

PRESSURE

Standard	KS	JIN	ASME	ISO DIN	AWWA C207
Code	K	J	A	P	AW
0	5	5	-		C
1	10	10	125	10	D
2	16	16	250	16	E
3	20	20	150	25	
4	30	30	300	40	
5	40	40	400	64	
6	63	63	600	100	
7	-	-	900	150	
8	-	-	1,500	250	
9	-	-	2,500	420	

BODY / PLATE MATERIAL

Code	KS/JIS Standard	ASTM Standard
Cast & Ductile Iron		
C	FC250/FC200	A126 Class B
D	FCD450	A536
D1	FCD-S	A395
Cast Steel		
W	SCPH2	A216 WCB
L		A352 LCC
L1		A352 LCB
L2	SCPL11	A352 LC1
W1	SCPH21	A217 WC6
W2	SCPH32	A217 WC9
W3		A216 WCC
W4	SCPH11	A217 WC1
C5	SCPH61	A217 C5
Stainless & Alloy Steel		
S1	SCS1	A217 CA15
S2		A217 C12
S3	SCS13	A351 CF8
S4	SCS14	A351 CF8M
S7	SCS21	A351 CF8C
S5	SCS19	A351 CF3
S6	SCS16	A351 CF3M
A	ALBC3	B148 C95800
A2		B148 C95200
B	BC6	B584 C83600
M3	MONEL	A494 M35-1
S8	DUPLEX	A890 4A
S9	DUPLEX	A890 5A
S10	DUPLEX	A890 6A
C1	INCONEL825	A494 CU5MCuC
C2	INCONEL625	A494 CW6MC

SEAT MATERIAL

Code	Designation	Applied Temp
N	NBR	0°C~80°C
C	CR	-10°C~80°C
V	VITON	-30°C~150°C
E	EPDM	-10°C~100°C
P	PTFE	0°C~ 260°C
M	METAL	
S3	SUS 304	-268°C ~ 538°C
S4	SUS 316	
SL	SUS316L	-268°C ~ 425°C
M3	MONEL	-196°C ~ 475°C
H6	STELLITE#6 (on Body)	-268°C ~ 538°C
F6	STELLITE#6 (on Body&Plate)	
S1	SUS 410	-29°C ~ 538°C
C1	ALLOY 825	-200°C ~ 538°C
C2	ALLOY 625	
C1L	Internal Alloy 825 Cladding	
C2L	Internal Alloy 625 Cladding	

SPRING MATERIAL

Code	Designation	Limits (Max)
S	STS 316 WPA	121°C
X	INCONEL X-750	538°C
M1	MONEL-K500	230°C

SPRING TORQUE

Code	Torque	Liquid		Pnuematic		
		Up to 0.88MPa	Over 0.88MPa	Up to 0.1MPa	Over 0.1MPa	Up to 0.01MPa
No code	Standard Torque	O	-	-	O	-
L	Low Torque	-	-	O	-	-
M	Mini Torque	-	-	-	-	O
H	High Torque	-	O	-	-	-

MAJOR SUPPLIES OF SSV

WAFER TYPE

MODEL NO **SDV-1**

- DIAMETER : 40A(1½") ~ 1800A(72")
- PRESSURE : 10K ~ 63K, 125LB ~ 2500LB

WAFER & RETAINERLESS TYPE

MODEL NO **SDV -1R**

- DIAMETER : 40A(1½") ~ 1800A(72")
- PRESSURE : 10K ~ 63K, 125LB ~ 2500LB

FLANGE TYPE

MODEL NO **SDV-2**

- DIAMETER : 40A(1½") ~ 1800A(72")
- PRESSURE : 10K ~ 63K, 125LB ~ 2500LB

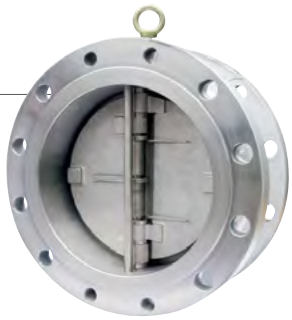

FLANGE & RETAINERLESS TYPE

MODEL NO **SDV-2R**

- DIAMETER : 40A(1½") ~ 1800A(72")
- PRESSURE : 10K ~ 63K, 125LB ~ 2500LB

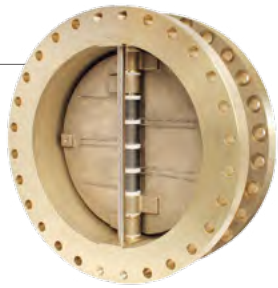

LUG TYPE

MODEL NO **SDV-3**

- DIAMETER : 40A(1½") ~ 1800A(72")
- PRESSURE : 10K ~ 63K, 125LB ~ 2500LB

LUG & RETAINERLESS TYPE

MODEL NO **SDV-3R**

- DIAMETER : 40A(1½") ~ 1800A(72")
- PRESSURE : 10K ~ 63K, 125LB ~ 2500LB

BUTTWELD TYPE

MODEL NO **SDV-4**

- DIAMETER : 80A(3") ~ 600A(24")
- PRESSURE : 150LB ~ 2500LB

HUB END TYPE

MODEL NO **SDV-5**

- DIAMETER : 50A(2") ~ 450A(18")
- PRESSURE : 900LB ~ 2500LB

RUBBER LINING TYPE

MODEL NO **SDV-1L**

- DIAMETER : 50A(2") ~ 1800A(72")
- PRESSURE : 10K, 125LB, 150LB

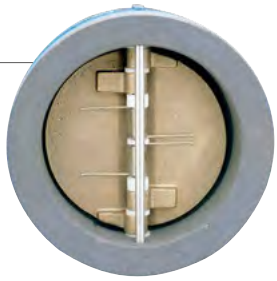

BY-PASS TYPE

MODEL NO **BDV-3**

- DIAMETER : 40A(1½") ~ 800A(32")
- PRESSURE : 10K, 20K 150LB ~ 300LB

수도용

MAJOR SUPPLIES OF SSV

SINGLE PLATE CHECK VALVE SHORT TYPE

MODEL NO **SSV-1**

- DIAMETER : 40A(1½") ~ 700A(28")
- PRESSURE : 125LB ~ 150LB

SINGLE PLATE CHECK VALVE LONG TYPE

MODEL NO **SSV-2**

- DIAMETER : 50A(2") ~900A(36")
- PRESSURE : 125LB ~ 300LB

NON SLAM CHECK VALVE NOZZLE TYPE

MODEL NO **NCV-1**

- DIAMETER : 50A(2") ~ 1500A(60")
- PRESSURE : 125LB ~ 2500LB

UL LISTED

NON SLAM CHECK VALVE TILTING TYPE

MODEL NO **TCV-1**

- DIAMETER : 100A(4") ~1500A(60")
- PRESSURE : 125LB ~ 300LB

FOOT VALVE / LEVER TYPE

MODEL NO **SFV-1**

- DIAMETER : 50A(2") ~ 750A(30")
- PRESSURE : 10K, 20K, 150LB, 300LB

FOOT VALVE / DUAL TYPE

MODEL NO **DFV-1**

- DIAMETER : 50A(2") ~ 600A(32")
- PRESSURE : 10K, 20K, 150LB, 300LB

SMOLENSKY CHECK VALVE

MODEL NO **SMC-1**

- DIAMETER : 50A(2") ~ 600A(24")
- PRESSURE : 10K~ 40K, 150LB, 300LB

수도용 KC 위생안전기준

POST INDICATOR GATE VALVE

MODEL NO **PIV-1**

GEAR TYPE

LEVER TYPE

KFI

UL LISTED

APPLICATION

Dual Plate Check Valves have been used successfully in following plants

- Oil & Gas
- Petrochemial
- Power Generation
- Retinery
- Oushore / Offshore
- Chemial Plant
- Nuclear
- Waste Incineration
- Water System
- LNG
- Shipbuilding
- Steel Industry
- General industry

ADVANTAGE

- Face-to-face dimensions for Dual Plate Wafer Check Valves are about one fourth of a Swing Check Valve.
- Weight is as little as about 20% of the corresponding Swing Check Valve due to the compact design.
- Dual Plate Wafer Check Valves have a spring design to close valves more efficiently when the back flow occurs to reduce the water hammer.
- These valves have the lower pressure drop than Swing Check Valves because of little friction resistance.
- Dual Plate Wafer Check Valves are less expensive than Swing Check Valves because of the lightness and compact design. These valves are also easier and less expensive to install and maintain because of fewer piping supports and easy handling for installation.
- Because Dual Plate Wafer Check Valves are flangeless, they are installed between flanges.
- Normal installation method for horizontal flow is with the hinge pin in vertical position.
- Installation is available for both horizontal and vertical piping.

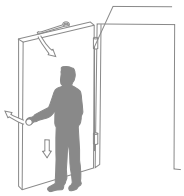

Dual Plate Check Valve

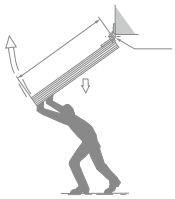

Swing Check Valve

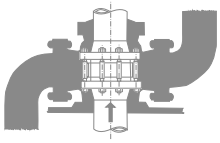

Vertical Piping

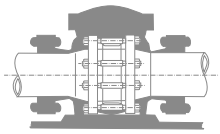

Horizontal Piping

SPRING SELECTION GUIDE

- **Standard Spring**
  Suitable for the line pressure of 0.298MPa through 0.89MPa without any pressure loss and the upward flow direction of vertical installation.
- **Low Coil Spring**
  Ideal for gas with the line pressure of 0.1MPa and under.
- **High Coil Spring**
  Suitable for the line pressure of 0.88MPa.

THE SEAT DESIGN OF DUAL PLATE CHECK VALVE

- **No leak, no distortion seals**
  Seat design can be furnished with the resilient seal materials that provide tight seals without leakage and metal seals with minimum leakage.

DUAL PLATE CHECK VALVE

OPENING PRESSURE

NOMINAL SIZE		STD SPRING	LOW COIL SPRING	WHEN ADD TO PLATE WEIGHT (STD SPRING)
A(mm)	B(inch)			
50	2″	16mbar	9mbar	22mbar
65	2½″	17	8	23
80	3″	21	8	28
100	4″	12	5	19
125	5″	12	5	22
150	6″	13	6	24
200	8″	15	8	27
250	10″	16	6	30
300	12″	19	9	34
350	14″	16	6	33
400	16″	17	8	36
450	18″	17	9	39
500	20″	13	6	36
600	24″	14	4	38

* Minimum pressure of valve opening for Horizontal installation UP-(When fluid flows from down to up) add to the weight of plate Down-(When fluid flows from up to down)100A(4")&LARGER; need to the spring with more coil numbers.

FLOW COEFFICIENT (Cv)

NOMINAL SIZE		Cv
A(mm)	B(inch)	
50A	2″	53
65A	2½″	83
80A	3″	139
100A	4″	271
125A	5″	483
150A	6″	800
200A	8″	1,509
250A	10″	2,640
300A	12″	4,073
350A	14″	5,303
400A	16″	7,342
450A	18″	9,946
500A	20″	12,960
600A	24″	20,500

FLOW EFFICIENT

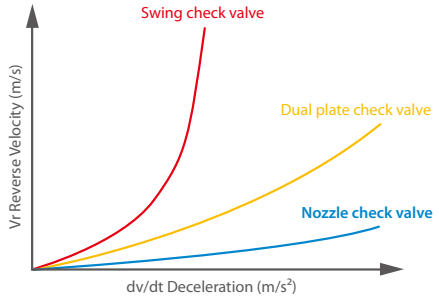

- Due to swing check valve internal design, water hammer and pressure surge problems can easily occur if the valve is not properly sized for the applicaton. Many piping system failure can be attrubuted to the improper installation of check valves.
- Soosung valve's Non-slam Nozzle check valve has a venturi port design that reduces flow resistance and improves flow efficiency. The spring loaded disc gives a tight disc&seat closure seal at all working pressures.
- Soosung valve's dual-plate check valve disc has a slim plate design which offers less restriction to flow at full open position. compared with many of other manufacturers Soosung valve's dual-plate check valve pressure drop is substantially lower.

RESILIENT SEALS

- **Typical Figure**
  Seal is bonded on plate seat for high pressure design.
  Under 2″~ 3″: ANSI 600 Series and under 4″ and
  larger : ANSI 300 series and under.

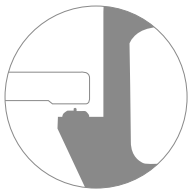

- **Typical Figure**
  Seal is bonded on plate seat for high pressure design.
  2″~ 3″: ANSI 900 series and over 4″ and
  larger : ANSI 400 series and over.

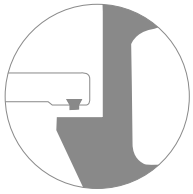

METAL TO METAL SEATS

- **Typical Figure**
  Body and plate are same material. (e.g. carbon steel, stainless steel, bronze.)

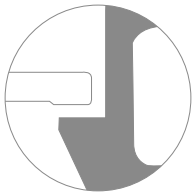

- **Typical Figure**
  All Material Most ANSI 150 and 300 Series. Overlay material is welded. Body seat only. Plate is same material as overlay.
  (e.g. if body seat is 316ss, plates are 316ss.)

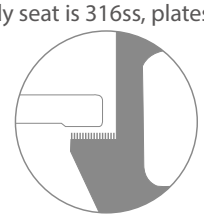

- **Typical Figure**
  Most of ANSI 400 series and higher rating. Overlay material is welded on seat surface of body and plate.

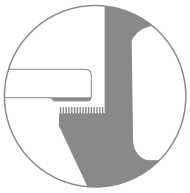

DUAL PLATE CHECK VALVE

WAFER TYPE

MODEL NO **SDV-1**

WAFER & RETAINERLESS TYPE

MODEL NO **SDV-1R**

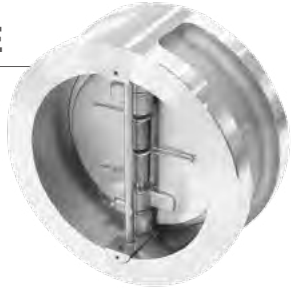

FLANGE TYPE

MODEL NO **SDV-2**

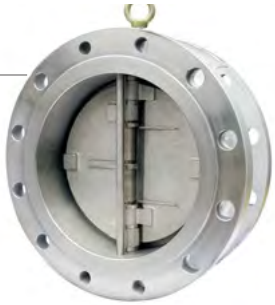

FLANGE & RETAINERLESS TYPE

MODEL NO **SDV-2R**

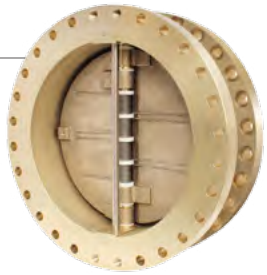

LUG TYPE

MODEL NO **SDV-3**

LUG & RETAINERLESS TYPE

MODEL NO **SDV-3R**

BUTTWELD TYPE

MODEL NO **SDV-4**

RUBBER LINING TYPE

MODEL NO **SDV-1L**

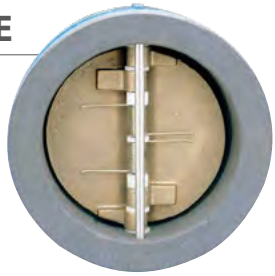

HUB END TYPE

MODEL NO **SDV-5**

BY-PASS TYPE

MODEL NO **BDV-3**

수도용

DUAL PLATE CHECK VALVE

FEATURES

- Wafer type, light weight and suitable for the limited space of piping. Spring is installed inside the valve.
- Shock and noise are reduced by any possible water-hammer.
- Rubber seat ensures the perfect seal.
- Horizontal and vertical installation is applicable.
- Widely used for the basic piping, water, sewerage and various piping.
- By-pass Type valve can be substituted for Smolensky check valve.
- Rubber Lining Type is suitable for sea water application.
- Retainerless Type. No holes through the body wall, so leakage to the outside is implssible, and therefore Fugitive Emission-free.

SPECIFICATION

DIAMETER	40A(1½″) ~ 1800A(72″)
APPLICABLE PRESSURE	• 10K ~ 63K • 125LB ~ 2500LB
CONNECTING ENDS	WAFER TYPE, FLANGE TYPE, LUG TYPE, RETAINERLESS TYPE, Buttweld End Type, Hub End Type
TEST Standard	According to KS B2304, API 598
NUMBER OF SPRING	1½″~ 5″(1EA), 6″~ 22″(2EA), 24″~72″(4~8EA)

EXPLODED VIEW DUAL CHECK VALVE
[Wafer & Retainerless Type]

COMPONENTS

NO	NAME	Q'ty
1	BODY	1
2	PLATE	2
3	HINGE PIN	1
4	STOP PIN	1
5	SPRING	1~10
6	CARRIER	2
7	KEEPER SCREW	2
8	DOWEL SCREW	2
9	BEARING	4~10

- EYE BOLT Supplied for Valves over 6″.

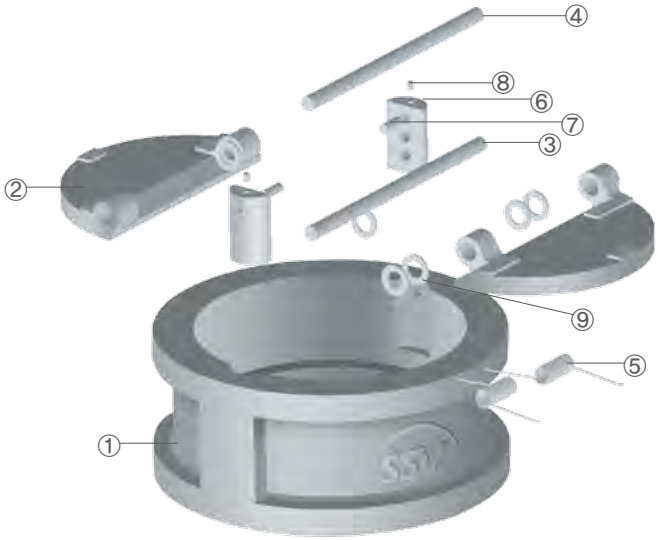

PRODUCTION MATERIALS

PART NAME	MATERIAL
BODY	Cast Iron, Carbon Steel, Alloy Steel, Special Alloy Steel, Stainless Steel, Al-Bronze, Duplex Stainless
PLATE	Carbon Steel, Alloy Steel, Special Alloy Steel, Stainless Steel, Al-Bronze, Duplex Stainless

- The material can be changed by customer's request.

Trim Number Chart (to API 594)

API Trim No.	Norminal Trim	Body Seat Surface	Plate Seat Surface
1	13Cr	13Cr	13Cr
2	Type 304	18Cr-8Ni	18Cr-8Ni
5	HARD FACE(HF)	Stellite No. 6	Stellite No. 6
8	13Cr & HF	Stellite No. 6	13Cr
9	Ni-Cu(MONEL)	Ni-Cu ALLOY	Ni-Cu ALLOY

API Trim No.	Norminal Trim	Body Seat Surface	Plate Seat Surface
10	Type 316	18Cr-8Ni-Mo	18Cr-8Ni-Mo
12	Type 316 & HF	Stellite No. 6	18Cr-8Ni-Mo
13	ALLOY20	19Cr-29Ni	19Cr-29Ni
14	ALLOY20 & HF	Stellite No. 6	19Cr-29Ni

WAFER TYPE (SDV-1, SDV-1R)

ASME B16.5 / JIS B2220 (KS B1511)

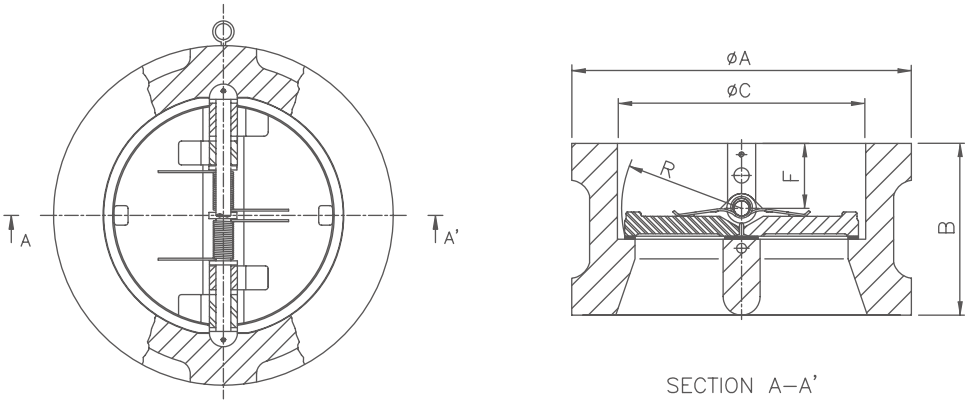

Size mm(inch)	Pressure Rating (KS,ANSI)	Type Facing	Dimensions(mm)					Flange Bolt Circle (mm)	No.of Bolts	Bolt Dia.	Bolt Length(mm)		Weight (kg)
			ØA	B	ØC	F	R				FF - RF	RTJ	
50 (2″)	10K	FF	101	54	60	27	32	120	4	M16	125	-	3
	20K	RF.FF	101	60	60	33	27	120	8	M16	140	-	3
	125	FF	105	54	60	27	32	121.0	4	5/8	145	-	3
	250	FF	111	54	60	25	27	127.0	8	5/8	160	-	4
	150	RF.R-22	105	60	60	33	27	120.7	4	5/8	160	170	3
	300	RF.R-23	111	60	60	33	27	127.0	8	5/8	165	185	3
	600	RF.R-23	111	60	60	33	27	127.0	8	5/8	185	190	3
	900	RF.R-24	143	70	60	33	29	165.1	8	7/8	240	245	6
	1500	RF.R-24	143	70	60	33	29	165.1	8	7/8	240	245	7
	2500	RF.R-26	146	70	60	33	29	171.4	8	1	280	280	8
65 (2½″)	10K	FF	121	54	73	27	37	140	4	M16	130	-	4
	20K	RF.FF	121	67	73	32	33	140	8	M16	150	-	5
	125	FF	124	60	73	27	37	140.0	4	5/8	155	-	4
	250	FF	130	60	73	25	33	149.0	8	3/4	180	-	5
	150	RF.R-25	124	67	73	32	33	139.7	4	5/8	175	185	4
	300	RF.R-26	130	67	73	32	33	149.2	8	3/4	185	205	4
	600	RF.R-26	130	67	73	32	33	149.2	8	3/4	205	215	4
	900	RF.R-27	165	83	73	35	35	190.5	8	1	265	275	7
	1500	RF.R-27	165	83	73	35	35	190.5	8	1	270	275	8
	2500	RF.R-28	168	83	73	35	35	196.8	8	1⅛	305	315	10
80 (3″)	10K	FF	131	57	89	30	45	150	8	M16	135	-	5
	20K	RF.FF	137	73	89	36	41	160	8	M20	170	-	7
	125	FF	137	67	89	30	45	152.0	4	5/8	165	-	5
	250	FF	149	67	89	27	41	168.0	8	3/4	195	-	7
	150	RF.R-29	137	73	89	36	41	152.4	4	5/8	180	190	6
	300	RF.R-31	149	73	89	36	41	168.3	8	3/4	200	215	7
	600	RF.R-31	149	73	89	36	41	168.3	8	3/4	220	225	7
	900	RF.R-31	168	83	89	34	42	190.5	8	7/8	255	260	13
	1500	RF.R-35	175	83	89	34	42	203.2	8	1⅛	285	295	14
	2500	RF.R-32	197	86	89	36	42	228.6	8	1¼	335	345	18
100 (4″)	10K	FF	156	64	114	32	53	175	8	M16	145	-	6
	20K	RF.FF	162	73	114	38	55	185	8	M20	175	-	8
	125	FF	175	67	114	32	53	191.0	8	5/8	175	-	6
	250	FF	181	67	114	30	54	200.0	8	3/4	200	-	8
	150	RF.R-36	175	73	114	38	54	190.5	8	5/8	180	190	8
	300	RF.R-37	181	73	114	38	55	200.0	8	3/4	205	225	8
	600	RF.R-37	194	79	114	42	55	215.9	8	7/8	250	255	12
	900	RF.R-37	206	102	114	40	55	235.0	8	1⅛	300	305	18
	1500	RF.R-39	210	102	114	40	55	241.3	8	1¼	325	335	21
	2500	RF.R-38	235	105	114	34	55	273.0	8	1½	385	400	27

WAFER TYPE (SDV-1, SDV-1R)

Size mm(inch)	Pressure Rating (KS,ANSI)	Type Facing	Dimensions(mm)					Flange Bolt Circle (mm)	No. of Bolts	Bolt Dia.	Bolt Length(mm)		Weight (kg)
			ØA	B	ØC	F	R				FF - RF	RTJ	
125 (5″)	10K	FF	187	70	141	33	67	210	8	M20	165	-	9
	20K	RF.FF	197	86	141	41	65	225	8	M22	195	-	14
	125	FF	197	83	141	33	67	216.0	8	3/4	200	-	9
	250	FF	216	83	141	38	65	235.0	8	3/4	225	-	14
	150	RF.R-41	197	86	141	41	65	215.9	8	3/4	200	215	10
	300	RF.R-41	216	86	141	41	65	235.0	8	3/4	225	240	14
	600	RF.R-41	241	105	141	40	65	266.7	8	1	295	305	23
150 (6″)	10K	FF	217	76	168	35	79	240	8	M20	170	-	10
	20K	RF	235	98	168	44	79	260	12	M22	215	-	19
	125	FF	222	95	168	35	79	241	8	3/4	210	-	10
	250	FF	257	95	168	43	79	270	12	3/4	240	-	19
	150	RF.R-43	222	98	168	44	79	241.3	8	3/4	215	230	16
	300	RF.R-43	251	98	168	44	79	269.9	12	3/4	240	255	19
	600	RF.R-45	267	136	168	46	82	292.1	12	1	335	340	33
	900	RF.R-45	289	159	168	56	82	317.5	12	1⅛	380	385	66
	1500	RF.R-46	283	159	168	56	82	317.5	12	1⅜	445	460	65
	2500	RF.R-47	318	159	168	56	82	368.3	8	2	535	550	72
200 (8″)	10K	FF	267	95	219	42	105	290	12	M20	195	-	19
	20K	RF·FF	279	127	219	48	102	305	12	M22	250	-	36
	125	FF	279	127	219	42	105	299	8	3/4	250	-	19
	250	FF	308	127	219	48	102	330	12	7/8	290	-	36
	150	RF.R-48	279	127	219	48	102	298.5	8	3/4	250	265	32
	300	RF.R-49	308	127	219	48	102	330.2	12	7/8	290	305	40
	600	RF.R-49	321	165	219	54	105	349.2	12	1⅛	385	390	68
	900	RF.R-49	359	206	219	73	107	393.7	12	1⅜	455	465	107
	1500	RF.R-50	352	206	219	73	107	393.7	12	1⅝	530	545	121
	2500	RF.R-51	387	206	219	73	107	438.2	12	2	620	645	140
250 (10″)	10K	FF	330	108	274	42	128	310	12	M22	215	-	31
	20K	RF.FF	353	146	274	52	126	380	12	M24	280	-	51
	125	FF	340	140	274	42	128	362	12	7/8	280	-	31
	250	FF	362	140	274	48	126	387	16	1	325	-	51
	150	RF.R-52	340	146	274	56	126	362	12	7/8	285	300	55
	300	RF.R-53	362	146	274	52	126	387.4	16	1	330	345	67
	600	RF.R-53	400	213	274	70	133	431.8	16	1¼	455	465	121
	900	RF.R-53	435	241	274	87	133	469.9	16	1⅜	505	510	188
	1500	RF.R-54	435	248	274	87	133	482.6	12	1⅞	615	630	195
	2500	RF.R-55	476	254	274	87	133	539.8	12	2½	770	810	230
300 (12″)	10K	FF	375	143	324	58	155	400	16	M22	255	-	56
	20K	RF.FF	403	181	324	70	152	430	16	M24	320	-	88
	125	FF	410	181	324	58	155	432	12	7/8	320	-	56
	250	FF	422	181	324	70	152	451	16	1⅛	380	-	90
	150	RF.R-56	410	181	324	70	152	431.8	12	7/8	325	335	94
	300	RF.R-57	422	181	324	70	152	450.8	16	1⅛	380	395	108
	600	RF.R-57	457	229	324	67	152	489	20	1¼	480	485	178
	900	RF.R-57	498	292	324	100	159	533.4	20	1⅜	575	580	284
	1500	RF.R-58	521	305	324	102	159	571.5	16	2	710	735	380
	2500	RF.R-60	549	305	324	103	159	619.1	12	2¾	875	915	440
350 (14″)	10K	FF	420	184	356	94	170	445	16	M22	300	-	71
	20K	RF.FF	447	222	356	94	170	480	16	M30	370	-	176
	125	FF	451	184	356	94	170	476	12	1	335	-	71
	250	FF	486	222	356	94	170	514	20	1⅛	425	-	176
	150	RF.R-59	451	184	356	90	170	476.3	12	1	340	355	97
	300	RF.R-61	486	222	356	94	170	514.4	20	1⅛	425	440	176
	600	RF.R-61	492	273	356	103	164	527	20	1⅜	535	545	220
	900	RF.R-62	521	356	356	130	181	558.8	20	1½	655	670	365
	1500	RF.R-63	578	356	356	130	181	635	16	2¼	795	825	405

- KS DESIGN FACE TO FACE MAKER STANDARD.

WAFER TYPE (SDV-1, SDV-1R)

Size mm(inch)	Pressure Rating (KS,ANSI)	Type Facing	Dimensions(mm)					Flange Bolt Circle (mm)	No. of Bolts	Bolt Dia.	Bolt Length(mm)		Weight (kg)
			ØA	B	ØC	F	R				FF - RF	RTJ	
400 (16″)	10K	FF	483	191	406	86	195	510	16	M24	315	-	99
	20K	RF.FF	507	232	406	95	195	540	16	M30	405	-	277
	125	FF	514	191	406	89	195	540	16	1	350	-	99
	250	FF	540	232	406	97	195	572	20	1¼	450	-	277
	150	RF.R-64	514	191	406	86	195	539.8	16	1	350	365	159
	300	RF.R-65	540	232	406	95	195	571.5	20	1¼	450	465	227
	600	RF.R-65	565	305	406	92	198	603.2	20	1½	585	595	320
	900	RF.R-66	575	384	406	137	203	616	20	1⅝	700	715	530
	1500	RF.R-67	641	384	406	137	203	704.8	16	2½	865	900	620
450 (18″)	10K	FF	538	203	457	86	219	565	20	M24	325	-	118
	20K	RF.FF	572	264	457	127	219	605	20	M30	440	-	301
	125	FF	549	203	457	86	219	578	16	1⅛	375	-	118
	250	FF	597	264	457	102	219	629	24	1¼	490	-	301
	150	RF.R-68	549	203	457	86	219	577.9	16	1⅛	375	390	185
	300	RF.R-69	597	264	457	127	219	628.6	24	1¼	490	505	270
	600	RF.R-69	613	362	457	121	228	654	20	1⅝	665	675	450
	900	RF.R-70	638	451	457	167	232	685.8	20	1⅞	805	825	620
	1500	RF.R-71	705	468	457	167	216	774.7	16	2¾	995	1,035	800
500 (20″)	10K *	FF	593	213	508	89	244	620	20	M24	345	-	180
	20K	RF.FF	627	292	508	108	244	660	20	M30	475	-	373
	125 *	FF	606	213	508	89	244	635	20	1⅛	390	-	180
	250 *	FF	654	292	508	109	244	686	24	1¼	525	-	373
	150	RF.R-72	606	219	508	89	244	635	20	1⅛	400	410	210
	300	RF.R-73	654	292	508	108	244	685.8	24	1¼	520	545	350
	600	RF.R-73	683	368	508	116	248	723.9	24	1⅝	685	695	551
	900	RF.R-74	699	451	508	116	248	749.3	20	2	825	845	860
	1500	RF.R-75	755	533	508	116	248	831.8	16	3	1,105	1,140	1,300
600 (24″)	10K *	FF	697	222	610	87	292	730	24	M30	370	-	258
	20K	RF.FF	731	318	610	122	292	770	24	M36	525	-	598
	125 *	FF	718	222	610	87	292	749	20	1¼	420	-	258
	250 *	FF	775	318	610	122	292	813	24	1½	575	-	541
	150	RF.R-76	718	222	610	86	292	749.3	20	1¼	420	430	292
	300	RF.R-77	775	318	610	122	292	812.8	24	1½	575	600	540
	600	RF.R-77	791	438	610	133	295	838.2	24	1⅞	795	810	950
	900	RF.R-78	838	495	610	149	300	901.7	20	2½	960	990	1,360
	1500	RF.R-79	901	559	610	149	300	990.6	16	3½	1,205	1,255	2,800
650 (26″)	125 *	FF	775	279	660	110	316	806.4	24	1¼	515	-	450
	150	RF	775	279	660	110	316	806.4	24	1¼	520	-	530
	300	RF.R-93	835	356	660	110	316	876.3	28	1⅝	640	660	590
	600	RF.R-93	867	457	660	122	312	914.4	28	1⅞	820	840	1,110
	900	RF.R-100	883	533	660	122	312	925.5	20	2¾	1,005	1,050	1,180
700 (28″)	10K	FF	807	321	711	132	327	840	24	M30	475	1,120	580
	125 *	FF	832	321	711	132	337	863.6	28	1¼	560	-	634
	150	RF	832	321	711	132	337	863.6	28	1¼	570	-	692
	300	RF.R-94	898	381	711	132	351	939.8	28	1⅝	680	705	750
	600	RF.R-94	914	483	711	165	347	965.2	28	2	890	900	865
	900	RF.R-101	946	572	711	165	347	1,022.4	20	3	1,070	1,105	1,140

WAFER TYPE (SDV-1, SDV-1R)

Size mm(inch)	Pressure Rating (KS,ANSI)	Type Facing	Dimensions(mm)					Flange Bolt Circle (mm)	No. of Bolts	Bolt Dia.	Bolt Length(mm)		Weight (kg)
			ØA	B	ØC	F	R				FF - RF	RTJ	
750 (30″)	10K	FF	867	305	762	156	365	900	24	M30	530	-	450
	125 *	FF	883	305	762	127	365	914	28	1¼	515	-	450
	150	RF	883	305	762	137	365	914.4	28	1¼	560	-	580
	300	RF RJ95	953	368	762	137	365	997	28	1¾	685	710	820
	600	RF.R-95	971	505	762	165	362	1,022.4	28	2	895	910	1,500
	900	RF.R-102	1,009	635	762	165	362	1,085.8	20	3	1,150	1,185	2,130
800 (32″)	10K	FF	917	356	813	156	397	950	28	M30	535	-	526
	125 *	FF	940	356	813	156	397	977.9	28	1½	630	-	533
	150	RF	940	356	813	156	397	977.9	28	1½	635	-	635
	300	RF.R-96	1,006	406	813	119	389	1,054.4	28	1⅞	745	775	1,600
	600	RF.R-96	1,022	533	813	145	370	1079.5	28	2¼	940	965	1,750
	900	RF.R-103	1,073	660	813	145	370	116,011	20	3¼	1,205	1,240	2,012
900 (36″)	10K *	FF	1,017	368	914	146	440	1,050	28	M30	610	-	656
	125 *	FF	1,048	368	914	146	440	1,086	32	1½	605	-	656
	150	RF	1,048	368	914	146	440	1,085.8	32	1½	665	-	685
	300	RF 98	1,117	483	914	165	440	1,168.4	32	2	840	-	1,609
	600	RF.R-98	1,130	635	914	210	445	1193.8	28	2½	1,075	1,195	2,150
	900	RF.R-105	1,200	718	914	210	445	1,289	20	3½	1,300	1,350	3,250
1000 (40″)	10K	FF	1,121	419	1,016	160	495	1,160	28	M36	610	-	1,010
	125 *	FF	1,162	419	1,016	160	495	1,200.2	36	1½	710	-	1,065
	150	RF	1,162	419	1,016	160	495	1,200.2	36	1½	715	-	1,190
	300	RF	1,114	546	1,016	191	499	1,155.7	32	1⅝	900	-	2,085
	600	RF	1,155	660	1,016	238	492	1,212.8	32	2¼	1,150	-	3,580
	900	RF	1,250	762	1,016	238	492	1,339.8	24	3½	1,395	-	4,571
1050 (42″)	125 *	FF	1,219	432	1,067	168	603	1,257	36	1½	680	-	1,260
	150	RF	1,219	432	1,067	168	603	1,257.3	36	1½	740	-	1,386
	300	RF	1,168	568	1,067	175	591	1,206.5	32	1⅝	930	-	2,630
	600	RF	1,219	701	1,067	240	520	1,282.7	28	2½	1,225	-	3,080
	900	RF	1,302	787	1,067	260	520	1,390.7	24	3½	1,440	-	3,720
1200 (48″)	125 *	FF	1,384	524	1,219	178	603	1,422	44	1½	780	-	2,055
	150	RF	1,384	524	1,219	178	603	1,422.4	44	1½	855	-	2,180
	300	RF	1,324	629	1,219	171	591	1,371.6	32	1⅞	1,035	-	3,300
	600	RF	1,391	787	1,219	270	591	1,460.5	32	2¾	1,365	-	4,432
1350 (54″)	150	RF	1,549	591	1,372	168	669	1,593.8	44	1¾	965	-	2,800
	300	RF	1,492	718	1,372	270	666	1,549.4	28	2¼	1,185	-	4,120
1500 (60″)	150	RF	1,715	660	1,524	279	740	1,759	52	1¾	1,055	-	3,538
1800 (72″)	150	RF	2051	914	1,829	367	891	2,096	60	1¾	1,265	-	6,350
2250 (90″)	150	RF	2,532	1289	2,270	512	1110	2,590.8	68	2¼	-	-	

VALVE SIZE	1 1/2″, 2″, 3″, ...,24″	26″,28″, ..., 60″	72″, 90″
FLANGE STANDARD	ASME B 16.5	ASME B 16.47 SERIES A(MSS SP44)	AWWA C207 CLASS D(175~150PSI)

- If you need above the size of 90", Please contact us.

WAFER TYPE (SDV-1, SDV-1R)

ASME B16.47 SERIES B

Size mm(inch)	Pressure Rating (KS,ANSI)	Type Facing	Dimensions(mm)					Flange Bolt Circle (mm)	No. of Bolts	Bolt Dia.	Bolt Length(mm)		Weight (kg)
			ØA	B	ØC	F	R				FF - RF	RTJ	
650 (26")	150	RF	725	279	629	110	316	744.5	36	3/4	430	-	370
	300	RF.R-93	771	356	629	110	316	803.3	32	1 1/4	640	665	580
	600	RF.R-93	765	457	629	122	312	806.5	28	1 5/8	820	835	870
	900	RF.R-100	838	533	629	122	312	901.7	20	2 1/2	990	1,025	1,050
700 (28")	150	RF	776	321	680	132	337	795.3	40	3/4	480	-	509
	300	RF.R-94	826	381	680	132	351	857.3	36	1 1/4	665	690	725
	600	RF.R-94	819	483	680	165	347	863.6	28	1 3/4	860	875	820
	900	RF.R-101	902	572	680	165	347	971.6	20	3	1,070	1,105	1,080
750 (30")	150	RF	827	305	735	137	365	846.1	44	3/4	460	-	540
	300	RF.R-95	886	368	735	137	365	920.8	36	1 3/8	665	690	790
	600	RF.R-95	880	505	735	165	362	927.1	28	1 7/8	910	925	1,450
	900	RF.R-102	959	635	735	165	362	1035.1	20	3	1,160	1,195	2,015
800 (32")	150	RF	881	356	784	156	397	900.2	48	3/4	520	-	668
	300	RF.R-96	940	406	784	119	389	977.9	32	1 1/2	730	760	1,521
	600	RF.R-96	933	533	784	145	370	984.3	28	2	955	975	1,664
	900	RF.R-103	1,016	660	784	145	370	1,092.2	20	3 1/4	1,195	1,230	2,007
900 (36")	150	RF	987	368	865	143	440	1,009.7	44	7/8	550	-	678
	300	RF.R-98	1,048	483	865	165	440	1089	32	1 5/8	815	850	1,310
	600	RF.R-98	1,048	635	865	210	445	1,104.9	28	2 1/4	1,100	1,125	2,154
	900	RF.R-105	1,124	718	865	210	445	1,200.2	24	3	1,280	1,325	3,184
1000 (40")	150	RF	1,095	419	987	160	495	1,120.6	44	1	620	-	1,182
	300	RF	1,150	546	987	191	499	1,190.8	40	1 5/8	905	-	2,165
1050 (42")	150	RF	1,146	432	1,062	168	508	1,171.4	48	1	640	-	1,095
	300	RF	1,200	568	1,062	168	508	1,244.6	36	1 3/4	940	-	2,954
1200 (48")	150	RF	1,307	524	1,193	178	603	1,335	44	1 1/8	750	-	2,050
	300	RF	1,368	629	1,193	171	591	1,416.1	40	1 7/8	1,025	-	3,500
1350 (54")	150	RF	1,464	591	1,281	168	669	1,492.3	56	1 1/8	830	-	3,124
	300	RF	1,530	718	1,281	270	666	1,577.8	48	1 7/8	1,130	-	5,820

Cryogenic Service

LUG TYPE (SDV-3, SDV-3R)

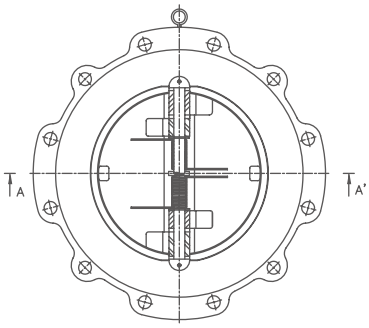

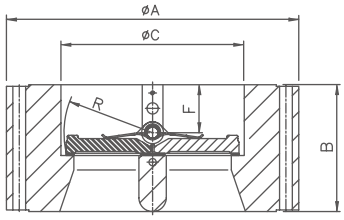

SECTION A–A'

Size mm(inch)	Pressure Rating	Type Facing	Dimensions(mm)					Flange Bolt Circle (mm)	No.of Bolts	Bolt Dia.	Bolt Length(mm)		Weight (kg)
			ØA	B	ØC	F	R				FF - RF	RTJ	
50 (2″)	150	RF.R-22	152	60	60	33	27	120.7	4	5/8	160	170	7
	300	RF.R-23	165	60	60	33	27	127	8	5/8	165	185	8
	600	RF.R-23	165	60	60	33	27	127	8	5/8	185	190	8
	900	RF.R-24	216	70	60	33	29	165.1	8	7/8	240	245	16
	1,500	RF.R-24	216	70	60	33	29	165.1	8	7/8	240	245	16
	2,500	RF.R-26	235	70	60	33	29	171.4	8	1	280	280	29
80 (3″)	150	RF.R-29	190	73	89	36	41	152.4	4	5/8	180	190	12
	300	RF.R-31	210	73	89	36	41	168.3	8	3/4	200	215	14
	600	RF.R-31	210	73	89	36	41	168.3	8	3/4	220	225	14
	900	RF.R-31	241	83	89	34	42	190.5	8	7/8	255	260	25
	1,500	RF.R-35	267	83	89	34	42	203.2	8	1⅛	285	295	29
	2,500	RF.R-32	305	86	89	36	42	228.6	8	1¼	335	345	40
100 (4″)	150	RF.R-36	229	73	114	38	54	190.5	8	5/8	180	190	19
	300	RF.R-37	254	73	114	38	55	200	8	3/4	205	225	23
	600	RF.R-37	273	79	114	42	55	215.9	8	7/8	250	255	30
	900	RF.R-37	292	102	114	40	55	235	8	1⅛	300	305	45
	1,500	RF.R-39	311	102	114	40	55	241.3	8	1¼	325	335	51
	2,500	RF.R-38	355	105	114	34	55	273	8	1½	395	400	82
150 (6″)	150	RF.R-43	279	98	168	44	79	241.3	8	3/4	215	230	32
	300	RF.R-43	318	98	168	44	79	269.9	12	3/4	240	255	45
	600	RF.R-45	356	136	168	46	82	292.1	12	1	335	340	81
	900	RF.R-45	381	159	168	56	82	317.5	12	1⅛	380	385	115
	1,500	RF.R-46	394	159	168	56	82	317.5	12	1⅜	445	460	118
	2,500	RF.R-47	485	159	168	56	82	368.3	8	2	535	550	197
200 (8″)	150	RF.R-48	343	127	219	48	102	298.5	8	3/4	250	265	63
	300	RF.R-49	381	127	219	48	102	330.2	12	7/8	290	305	78
	600	RF.R-49	419	165	219	54	105	349.2	12	1⅛	385	390	134
	900	RF.R-49	470	206	219	73	107	393.7	12	1⅜	455	465	217
	1,500	RF.R-50	483	206	219	73	107	3937	12	1⅝	530	545	283
	2,500	RF.R-51	550	206	219	73	107	438.2	12	2	620	645	300
250 (10″)	150	RF.R-52	406	146	274	56	126	362	12	7/8	285	300	93
	300	RF.R-53	444	146	274	52	126	387.4	16	1	330	345	115
	600	RF.R-53	508	213	274	70	133	431.8	16	1¼	455	465	234
	900	RF.R-53	546	241	274	87	133	469.9	16	1⅜	505	510	330
	1,500	RF.R-54	584	248	274	87	133	482.6	12	1⅞	615	630	361
	2,500	RF.R-55	675	254	273	87	133	539.8	12	2½	770	610	512
300 (12″)	150	RF.R-56	483	181	324	70	152	431.8	12	7/8	325	335	170
	300	RF.R-57	521	181	324	70	152	450.8	16	1⅛	380	395	242
	600	RF.R-57	559	229	324	67	152	489	20	1¼	480	485	304
	900	RF.R-57	610	292	324	100	159	533.4	20	1⅜	575	580	509
	1500	RF.R-58	673	305	324	102	159	571.5	16	2	710	735	637
	2500	RF.R-60	760	305	324	103	159	619.1	12	2¾	875	915	880
350 (14″)	150	RF.R-59	533	184	356	90	170	476.3	12	1	340	355	200
	300	RF.R-61	584	222	356	94	170	514.4	20	1⅛	425	440	310

LUG TYPE (SDV-3, SDV-3R)

Size mm(inch)	Pressure Rating (ANSI)	Type Facing	Dimensions(mm)					Flange Bolt Circle (mm)	No.of Bolts	Bolt Dia.	Bolt Length(mm)		Weight (kg)
			ØA	B	ØC	F	R				FF - RF	RTJ	
350 (14″)	600	RF.R-61	603	273	356	103	164	527	20	1⅜	535	540	571
	900	RF.R-62	641	356	356	130	181	558.8	20	1½	655	670	775
	1500	RF.R-63	749	356	356	130	181	635	16	2 1/4	795	825	896
400 (16″)	150	RF.R-64	597	191	406	86	195	539.8	16	1	350	365	246
	300	RF.R-65	648	232	406	95	195	571.5	20	1¼	450	465	489
	600	RF.R-65	686	305	406	92	198	603.2	20	1½	585	595	548
	900	RF.R-66	705	384	406	137	203	616	20	1⅝	700	715	609
	1500	RF.R-67	826	384	406	137	203	704.8	16	2 1/2	865	900	1,090
450 (18″)	150	RF.R-68	635	203	457	86	219	577.9	16	1⅛	375	390	290
	300	RF.R-69	710	264	457	127	219	628.6	24	1¼	490	505	558
	600	RF.R-69	743	362	457	121	228	654	20	1⅝	665	675	1,078
	900	RF.R-70	787	451	457	167	232	685.8	20	1⅜	805	825	1,450
	1500	RF.R-71	914	468	457	167	216	774.7	16	2 3/4	995	1,035	1.580
500 (20″)	150	RF.R-72	698	219	508	89	244	635	20	1⅛	400	410	348
	300	RF.R-73	775	292	508	108	244	685.8	24	1¼	520	545	766
	600	RF.R-73	813	368	508	116	248	723.9	24	1⅝	685	695	1,297
	900	RF.R-74	857	451	508	116	248	749.3	20	2	825	845	1,960
	1500	RF.R-75	984	533	508	116	248	831.8	16	3	1,105	1,140	2,235
600 (24″)	150	RF.R-76	813	222	610	86	292	749.3	20	1¼	420	430	396
	300	RF.R-77	914	318	610	122	292	812.8	24	1½	575	600	1,190
	600	RF.R-77	940	438	610	133	295	838.2	24	1⅞	795	610	1,554
	900	RF.R-78	1,041	495	610	149	300	901.7	20	2 ½	960	990	2,351
	1500	RF.R-79	1,168	559	610	149	300	990.6	16	3 1/2	1,205	1,255	3,250
650 (26")	150	RF	870	279	660	110	316	806.4	24	1 1/4	520	-	1,180
	300	RF.R-93	972	356	660	110	316	876.3	28	1 5/8	640	665	1,596
	600	RF.R-93	1,016	457	660	122	312	914.4	28	1 7/8	820	840	1,860
	900	RF.R-100	1,086	533	660	122	312	952.5	20	2 3/4	1,005	1,050	2,418
700 (28")	150	RF	927	321	711	132	351	863.6	28	1 1/4	570	-	1,245
	300	RF.R-94	1,035	381	711	132	351	939.8	28	1 5/8	680	705	1,468
	600	RF.R-94	1,073	483	711	165	347	965.2	28	2	890	900	1,930
	900	RF.R-101	1,168	572	711	165	347	1022.4	20	3	1,070	1,105	3,080
750 (30")	150	RF	984	305	762	137	371	914.4	28	1 1/4	560	-	1,029
	300	RF.R-95	1,092	368	762	137	375	997	28	1 3/4	685	710	2,015
	600	RF.R-95	1,130	505	762	165	362	1,022.4	28	2	895	910	3,148
	900	RF.R-102	1,232	635	762	165	362	1,085.8	20	3	1,150	1,185	3,956
800 (32")	150	RF	1,060	356	813	119	389	977.9	28	1 1/2	635	-	3,046
	300	RF.R-96	1,149	406	813	119	389	1,054.1	28	1 7/8	745	775	3,570
	600	RF.R-96	1,194	533	813	145	370	1,079.5	28	2 1/4	940	965	4,035
	900	RF.R-103	1,314	660	813	145	370	1,155.7	20	3 1/4	1,205	1,240	4,381
900 (36")	150	RF	1,168	368	914	143	452	1,085.9	32	1 1/2	665	-	1,470
	300	RF.R-98	1,270	483	914	165	452	1,168.4	32	2	840	-	2,776
	600	RF.R-98	1,314	635	914	210	445	1,193.8	28	2 1/2	1,010	1,095	5,308
	900	RF.R-105	1,461	718	914	210	445	1,289	20	3 1/2	1,300	1,350	6,434
1000 (40")	150	RF	1,289	419	1,016	499	499	1200.2	36	1 1/2	715	-	1,462
	300	RF	1,238	546	1,016	499	499	1,155.7	32	1 5/8	900	-	3,290
	600	RF	1,321	660	1,016	492	492	1,212.8	32	2 1/4	1,150	-	7,862
	900	RF	1,511	762	1,016	492	492	1,339.8	24	3 1/2	1,395	-	8,416
1050 (42")	150	RF	1,346	432	1,067	527	527	1,257.3	36	1 1/2	740	-	2,379
	300	RF	1,289	568	1,067	522	522	1,206.5	32	1 5/8	930	-	5,513
	600	RF	1,403	702	1,067	240	520	1,282.7	28	2 1/2	1,225	-	6,564
	900	RF	1,562	787	1,067	260	520	1,390.7	24	3 1/2	1,440	-	-
1200 (48")	150	RF	1,511	524	1,219	178	603	1,422.4	44	1 1/2	855	-	4,171
	300	RF	1,467	629	1,219	171	591	1,371.6	32	1 7/8	1,035	-	6,236
	600	RF	1,594	787	1,219	270	591	1,460.5	32	2 3/4	1,365	-	-
1350 (54")	150	RF	1,683	591	1,372	180	663	1,593.8	44	1 3/4	965	-	-
	300	RF	1,657	718	1,372	270	666	1,549.4	28	2 1/4	1,185	-	-
1500 (60")	150	RF	1,854	660	1,524	279	740	1,759	52	1 3/4	1055	-	-
	300	RF	1,810	838	1,524	-	-	1,701.8	32	2 1/4	1,330	-	-

FLANGE TYPE (SDV-2, SDV-2R)

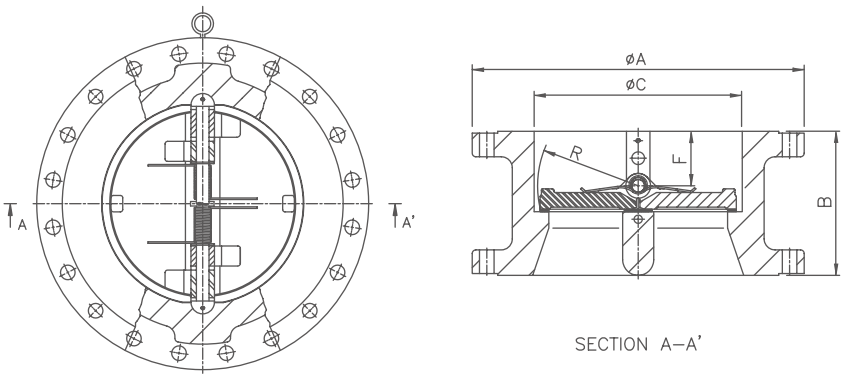

Size mm(inch)	Pressure Rating (ANSI)	Type Facing	Dimensions(mm)					Flange Bolt Circle (mm)	No.of Bolts	Bolt Dia.	Bolt Length(mm)		Weight (kg)
			ØA	B	ØC	F	R				FF - RF	RTJ	
200(8")	150	RF.R-48	343	127	219	48	102	298.5	8	3/4	140	140	51
250 (10")	150	RF.R-52	406	146	274	56	126	361.9	12	7/8	150	150	88
	600	RF.R-53	508	213	274	70	133	431.8	16	1 1/4	245	245	214
	900	RF.R-53	546	241	274	87	133	469.9	16	1 3/8	265	265	301
300 (12")	150	RF.R-56	483	181	324	70	152	431.8	12	7/8	150	150	130
	300	RF.R-57	521	181	324	70	152	450.8	16	1 1/8	205	205	155
	600	RF.R-57	559	229	324	67	152	488.9	20	1 1/4	255	255	250
	900	RF.R-57	610	292	324	100	159	533.4	20	1 3/8	285	285	349
350 (14")	150	RF.R-59	533	184	356	90	170	476.2	12	1	165	165	148
	300	RF.R-61	584	222	356	94	170	514.3	20	1 1/8	210	210	210
	600	RF.R-61	603	273	356	103	164	527	20	1 3/8	265	265	389
	900	RF.R-62	641	356	356	130	181	558.8	20	1 1/2	310	310	480
400 (16")	150	RF.R-64	597	191	406	86	195	539.7	16	1	170	170	161
	300	RF.R-65	648	232	406	95	195	571.5	20	1 1/4	220	220	285
	600	RF.R-65	686	305	406	92	198	603.2	20	1 1/2	285	285	447
	900	RF.R-66	705	384	406	137	203	615.9	20	1 5/8	325	325	550
450 (18")	150	RF.R-68	635	203	457	86	219	577.8	16	1 1/8	180	180	205
	300	RF.R-69	710	264	457	127	219	628.6	24	1 1/4	230	230	388
	600	RF.R-69	743	362	457	121	228	654	20	1 5/8	305	305	560
	900	RF.R-70	787	451	457	167	232	685.8	20	1 7/8	365	365	850
500 (20")	150	RF.R-72	698	219	508	89	244	635	20	1 1/8	190	190	282
	300	RF.R-73	775	292	508	108	244	685.8	24	1 1/4	240	240	499
	600	RF.R-73	813	368	508	116	248	723.9	24	1 5/8	325	325	776
	900	RF.R-74	857	451	508	116	248	749.3	20	2	385	385	1,780
600 (24")	150	RF.R-76	813	222	610	86	292	749.3	20	1 1/4	205	205	410
	300	RF.R-77	914	318	610	122	292	812.8	24	1 1/2	265	265	760
	600	RF.R-77	940	438	610	133	295	838.2	24	1 7/8	365	365	1,154
	900	RF.R-78	1,041	495	610	149	300	901.7	20	2 1/2	485	485	1,890
650 (26")	150	RF	869	279	660	110	316	806.5	24	1 1/4	245	245	1,007
	300	RF.R-93	971	356	660	110	316	876.3	28	1 5/8	290	310	1,238
	600	RF.R-93	1,016	457	660	122	312	914.4	28	1 7/8	390	400	1,418
	900	RF.R-100	1,085	533	660	122	312	952.5	20	2 3/4	510	530	1,991
700 (28")	150	RF	927	321	711	132	333	863.6	28	1 1/4	255	255	1,125
	300	RF.R-94	1,035	381	711	132	333	939.8	28	1 5/8	305	325	1,260
	600	RF.R-94	1,073	483	711	165	330	965.2	28	2	405	415	1,610
	900	RF.R-101	1,168	572	711	165	330	1,022.4	20	3	525	545	2,600

FLANGE TYPE (SDV-2, SDV-2R)

Size mm(inch)	Pressure Rating (KS,ANSI)	Type Facing	Dimensions(mm)					Flange Bolt Circle (mm)	No.of Bolts	Bolt Dia.	Bolt Length(mm)		Weight (kg)
			ØA	B	ØC	F	R				FF - RF	RTJ	
750 (30″)	150	RF	984	305	762	137	371	914.4	28	1 1/4	260	260	810
	300	RF.R-95	1,092	368	762	137	375	997	28	1 3/4	325	325	1,425
	600	RF.R-95	1,130	505	762	165	362	1,022.4	28	2	410	420	1,690
	900	RF.R-102	1,231	635	762	165	362	1,085.9	20	3	540	560	3,268
800 (32″)	150	RF	1,060	356	813	119	389	977.9	28	1 1/2	290	-	1,096
	300	RF.R-96	1,149	406	813	119	389	1,054.1	28	1 7/8	345	370	1,481
	600	RF.R-96	1,193	533	813	145	370	1,079.5	28	2 1/4	430	445	2,133
	900	RF.R-103	1,314	660	813	145	370	1,155.7	20	3 1/4	570	590	3,650
900 (36″)	150	RF	1,168	368	914	143	452	1,085.9	32	1 1/2	305	305	1,142
	300	RF.R-98	1,270	483	914	165	452	1,168.4	32	2	360	385	2,139
	600	RF.R-98	1,314	635	914	210	445	1,193.8	28	2 1/2	455	470	2,865
	900	RF.R-105	1,460	718	914	210	445	1,289.1	20	3 1/2	615	640	-
1000 (40″)	150	RF	1,289	419	1,016	153	499	1,200.2	36	1 1/2	305	-	1590
	300	RF	1,238	546	1,016	191	499	1,155.7	32	1 5/8	360	-	2,733
	600	RF	1,320	660	1,016	238	492	1,212.9	32	2 1/4	490	-	-
	900	RF	1,511	762	1,016	238	492	1,339.9	24	3 1/2	630	-	-
1050 (42″)	150	RF	1,346	432	1,067	173	527	1,257.3	36	1 1/2	320	-	2,160
	300	RF	1,289	568	1,067	148	522	1,206.5	32	1 5/8	370	-	3,965
	600	RF	1,403	702	-	-	-	1,282.7	28	2 1/2	520	-	-
	900	RF	1,562	787	-	-	-	1,390.7	24	3 1/2	650	-	-
1200 (48")	150	RF	1,511	524	1,219	178	603	1,422.4	44	1 1/2	340	-	2,750
	300	RF	1,467	629	1,219	171	591	1,371.6	32	1 7/8	410	-	5,010
	600	RF	1,594	787	1,219	-	-	1,460.5	32	2 3/4	575	-	5,043
1350 (54")	150	RF	1,682	591	1,370	180	663	1,593.9	44	1 3/4	380	-	3,495
	300	RF	1,657	718	1,370	-	-	1,549.4	28	2 1/4	470	-	5,760
1500 (60")	150	RF	1,854	660	1,524	279	740	1,759	52	1 3/4	400	-	-
	300	RF	1,809	838	1,524	-	-	1,701.8	32	2 1/4	490	-	-

- 2"~6" face to face dimensions to manufacturer's standard.

VALVE SIZE	1 1/2″, 2″, 3″, ...,24″	26″,25″,, ..., 60″	72″, 90″
FLANGE STANDARD	ASME B 16.5	ASME B 16.47 SERIES A(MSS SP44)	AWWA C207 CLASS D

Hydrostatic Pressure Test

BUTTWELD TYPE INSTALLATION DIMENSIONS (ASME B 16.25)

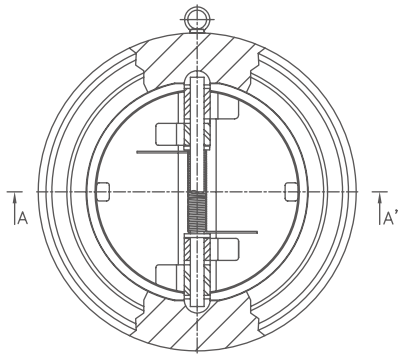

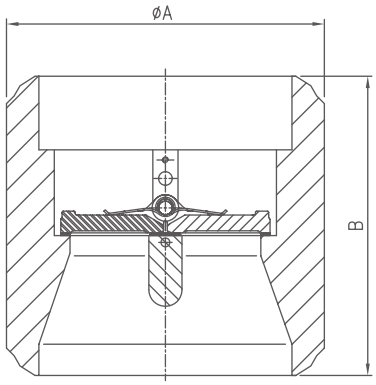

SECTION A–A'

Size mm(inch)	PRESSURE RATING (ASME)	Dimensions(mm)		Weight (kg)
		ØA	B	
80 (3")	150	98	136	6.6
	300	98	136	6.6
	600	113.3	136	7
	900	113.3	136	7
	1500	113.3	136	7
100 (4")	150	129.5	120.7	6.9
	300	129.5	120.7	7.4
	600	135.6	120.7	8.5
	900	146.7	165.1	14
	1500	155.1	165.1	16
	2500	235	165.1	19
150 (6")	150	168.3	136.5	13
	300	168.3	136.5	13
	600	171.9	136.5	15
	900	228.8	206.4	28
	1500	228.8	206.4	37
	2500	228.8	206.4	44
200 (8")	150	226.5	152.4	22
	300	226.5	152.4	25
	600	239.5	215.9	43
	900	252.2	292.1	69
	1500	284.2	292.1	92
	2500	312.6	292.1	113
250 (10")	150	270.6	187.3	43
	300	270.6	187.3	43
	600	289.4	262	78
	900	305.7	262	90
	1500	346.5	346.1	159
	2500	367.3	346.1	179

Size mm(inch)	PRESSURE RATING (ASME)	Dimensions(mm)		Weight (kg)
		ØA	B	
300 (12")	150	329.5	215.9	63
	300	329.5	215.9	69
	600	351.8	292.1	117
	900	372.6	317.5	159
	1500	419.2	349.3	234
	2500	367.3	412.8	344
350 (14")	150	380	260.4	102
	300	380	260.4	113
	600	381.8	355.6	199
	900	381.8	355.6	231
	1500	429.6	355.6	264
400 (16")	150	425.3	304.8	146
	300	425.3	304.8	164
	600	441	400.1	263
	900	469.5	400.1	315
	1500	493.8	438.2	434
450 (18")	150	475.4	330.2	190
	300	475.4	330.2	215
	600	487.5	409.6	306
	900	519.5	447.7	423
	1500	555.4	457.2	568
500 (20")	150	526.7	400.1	273
	300	526.7	400.1	213
	600	539.9	495.3	461
	900	578	546.1	637
	1500	621.7	546.1	855
600 (24")	150	609.6	342.9	361
	300	609.6	419.1	458
	600	635.4	546.1	722
	900	680.1	603.2	1050
	1500	738.5	660.4	1401

- The nominal bore of the valve will be determined by the pipe schedule selected by the customer and be in accordance with ASME B 16.25. Valve size is not specified in the above table, please contact us. Customer must state pipe schedule at time of inquiry.

HUB END TYPE INSTALLATION DIMENSIONS

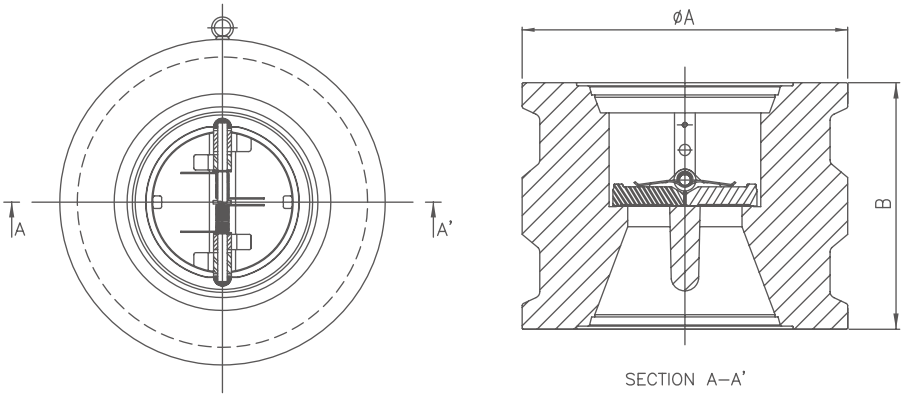

Size mm(inch)	PRESSURE RATING (ASME)	Seal Ring No.	Dimensions(mm)		Weight (kg)
			ØA	B	
50 (2")	900	13~20	92	136	13
	1500		92	136	13
	2500		92	136	13
80 (3")	900	23~27	127	158	28
	1500		127	158	28
	2500		127	158	28
100 (4")	900	31~40	152	220	44
	1500		152	220	44
	2500		152	220	44
150 (6")	900	40~62	235	279	136
	1500		235	279	136
	2500		235	279	136
200 (8")	900	52~82	292	311	242
	1500		292	311	242
	2500		292	311	242
250 (10")	900	72~97	346	381	319
	1500		346	381	319
	2500		346	381	319
300 (12")	900	82~120	406	431	440
	1500		406	431	440
	2500		406	431	440
350 (14")	900	106~130	470	482	645
	1500		470	482	645
400 (16")	900	120~140	533	533	750
	1500		533	533	750
450 (18")	900	152~170	552.5	584	1230
	1500		552.5	584	1230

- Valve size is not specified in the above table. Please contact us. Customer must provide hub drawings with inquiries and oders. Hubs, seal ring and clamp assemblies are not supplied with hub end type valve.

EXTENDED BODY TYPE WAFER CHECK VALVE (SDV-6)

INSTALLATION DIMENSION (ASME B 16.5 & ASME B 16.47 SER. A)

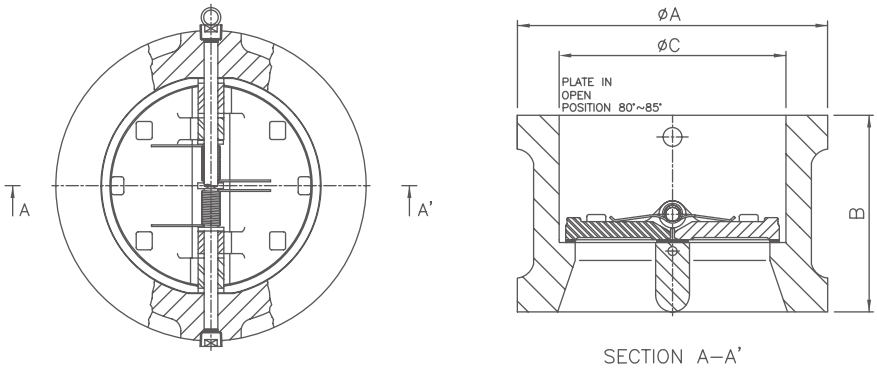

Size (inch)	RATING (ASME)	Dimensions(mm)			Connection Bolt			Weight (kg)
		ØA	B	C	No.	Dia.	Length	
10"	150	340	184	274	12	7/8	320	75
	300	362	184	274	16	1	365	80
	600	400	251	274	16	1 1/4	490	128
	900	435	260	274	16	1 3/8	520	210
	1500	435	292	274	12	1 7/8	660	220
	2500	476	292	274	12	2 1/2	810	230
12"	150	410	229	324	12	7/8	370	110
	300	422	229	324	16	1 1/8	425	120
	600	457	295	324	20	1 1/4	545	165
	900	498	325	324	20	1 3/8	605	275
	1500	521	353	324	16	2	760	365
	2500	549	353	324	12	2 3/4	920	420
14"	150	451	213	356	12	1	370	116
	300	486	260	356	20	1 1/8	460	185
	600	492	324	356	20	1 3/8	585	220
	900	521	371	356	20	1 1/2	670	465
	1500	578	371	356	16	2 1/4	810	490
16"	150	514	241	406	16	1	400	160
	300	540	283	406	20	1 1/4	500	242
	600	565	368	406	20	1 1/2	650	320
	900	575	394	406	20	1 5/8	710	705
	1500	641	419	406	16	2 1/2	900	760
18"	150	549	264	457	16	1 1/8	440	190
	300	597	318	457	24	1 1/4	540	317
	600	613	425	457	20	1 5/8	730	480
	900	638	460	457	20	1 7/8	815	640
	1500	705	514	457	16	2 3/4	1,040	957

Size (inch)	RATING (ASME)	Dimensions(mm)			Connection Bolt			Weight (kg)
		ØA	B	C	No.	Dia.	Length	
20"	150	606	298	508	20	1 1/8	480	250
	300	654	349	508	24	1 1/4	580	410
	600	683	445	508	24	1 5/8	760	700
	900	699	495	508	20	2	870	720
	1500	756	556	508	16	3	1,125	1,065
24"	150	718	349	610	20	1 1/4	550	390
	300	775	406	610	24	1 1/2	660	660
	600	791	540	610	24	1 7/8	895	1,015
	900	838	565	610	20	2 1/2	1,030	1,370
	1500	902	632	610	16	3 1/2	1,275	1,960
26"	150	775	457	660	24	1 1/4	695	790
28"	300	899	514	711	28	1 5/8	810	900
	600	914	584	711	28	2	965	1,490
30"	150	883	457	762	28	1 1/4	710	700
	300	953	524	762	28	1 3/4	840	1,115
	600	972	680	762	28	2	1,065	1,700
	900	1010	734	762	20	3	1,245	2,800
32"	150	940	530	813	28	1 1/2	810	750
36"	150	1048	556	914	32	1 1/2	850	1,230
	300	1118	635	914	32	2	990	1,800
	600	1130	787	914	28	2 1/2	1,220	3,170
42"	150	1219	654	1,067	36	1 1/2	965	1,740
	300	1168	810	1,067	32	1 5/8	1,170	2,900
48"	150	1384	784	1,219	44	1 1/2	1,115	2,700
	300	1324	889	1,219	32	7/8	1,295	3,420
	600	1391	1019	1,219	32	2 3/4	1,595	4,520
54"	150	1549	832	1,372	44	1 3/4	1,200	3,450

- Valve size is not specified in the above table, please contact us.

Extended body design applicable for extremely fast opening condition such as compressor discharge and steam extraction line. Extended type has special plate configuration to allow each plate to strike the stop pin in its center of persussion. To absorb high impacts the stop pin and hinge lugs are oversized.

POST INDICATOR GATE VALVE

MODEL NO **PIV-1**

MODEL NO **PIV-2**
(RUBBER LINING TYPE)

PIV-1GT
GEAR TYPE
(LIMIT SWITCH)

PIV-1LT
LEVER TYPE
(TAMPER SWITCH)

UL LISTED
- Post indicator : File Ex26420
- Gate Valve 2"~24" : File Ex26419

KFI
- Gear Operated : PIV16-02
- Lever Operated : PIV16-02-1

FEATURES

- Post indicator Gate Valve is installed on the pipe lines of the ground-hydrants and it can be opened and closed for fire-hydrants maintenance.
- NRS Gate valve is a structure that stem does not move up and down when opening and closing the disc.
- Post Indicator attached to NRS Gate valve on the fire fighting water pipe and it can control VALVE-OPENING and CLOSING from the ground via LEVER or GEAR TYPE.
- The status of valve opening and closing is checkable via transparent box on the indicator post. As a result, maintenance is much easier. ADJUSTABLE TYPE is a structure that workers can adjust length of the indicator post according to depth of the piping on the spot of burying valve.
- Tamper switch can be attached.

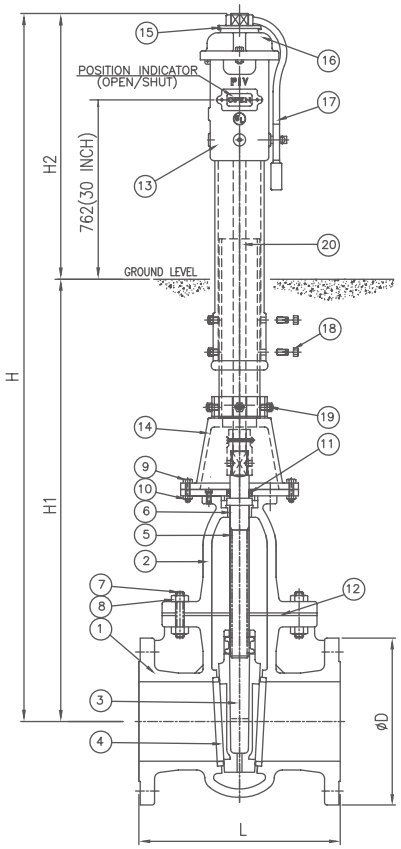

PIV-1

SPECIFICATION

DIAMETER	100A(4") ~ 600A(24")
APPLICABLE PRESSURE	10K ~ 20K 125LB, 150LB, 300LB
CONNECTING ENDS	FLANGE TYPE
TEST METHOD	According to KS B2304, API 598

DIMENSIONS(150LB)

SIZE	øD	L	H1	H2
4"	229	229	1,000	900
5"	254	254	1,000	900
6"	279	267	1,000	900
8"	343	292	1,000	900
10"	406	330	1,000	900
12"	483	356	1,200	900
14"	533	381	1,300	900
16"	597	406	1,500	900
18"	635	432	1,500	900
20"	698	457	1,500	900
24"	813	508	1,500	900

- PAINTING : H1 - BLACK COLOR
  H2 - RED COLOR

DESCRIPTION OF PARTS (PIV - 1)

NO	PART NAME		Q'TY	MATERIALS (ASTM SPECIFICATION)
1	BODY		1	A216 - WCB
2	BONNET		1	A216 - WCB
3	DISC	6" UNDER	1	A217 - CA15
		8" OVER	1	WCB + 13Cr FACED
4	SEAT RING		2	A105+ 13Cr FACED
5	STEM		1	A276 - 410
6	BONNET BUSH		1	B62
7	BONNET BOLT			A193 - B7
8	BONNET NUT			A194 - 2H
9	HEX. BOLT		4	SS304
10	HEX. NUT		4	SS304
11	PACKING		2	O - RING (NBR)
12	GASKET		1	SS / GRAPHITE (P#1200 - GR or EQV.)
13	TOP SECTION		1	A126 CLASS B
14	BOTTON SECTION		1	A126 CLASS B
15	OPERATION STEM NUT		1	A351 GR. CF8
16	COVER		1	A126 CLASS B
17	LEVER		1	A126 CLASS B
18	TOP SECTION BOLT		1	SS304
19	BOTTON SECTION BOLT		1	SS304
20	STEM		1	SQUARE BAR(A29)

* The material can be changed by customer's request.

DESCRIPTION OF PARTS (PIV - 2)

NO	PART NAME	Q'TY	MATERIALS (ASTM SPECIFICATION)
1	BODY	1	A536
2	BONNET	1	A536
3	DISK	1	A536 + EPDM LINING
5	STEM	1	A276 - 410
6	BONNET BUSH	1	B16
7	BONNET BOLT		SS304
8	BONNET NUT		SS304
9	HEX. BOLT	4	SS304
10	HEX. NUT	4	SS304
11	PACKING	2	O - RING (NBR)
12	GASKET	1	NBR
13	TOP SECTION	1	A126 CLASS B
14	BOTTON SECTION	1	A126 CLASS B
15	OPERATION STEM NUT	1	A351 GR. CF8
16	COVER	1	A126 CLASS B
17	LEVER	1	A126 CLASS B
18	TOP SECTION BOLT	1	SS304
19	BOTTON SECTION BOLT	1	SS304
20	TOP STEM	1	SQUARE BAR(A29)

* The material can be changed by customer's request.

NOZZLE TYPE

MODEL NO **NCV-1**

UL LISTED

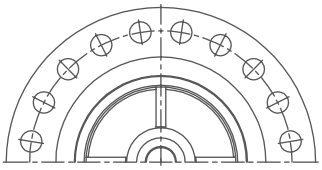

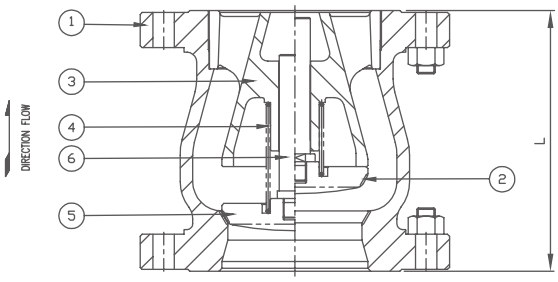

FEATURES

- Non-Slam Nozzle Check valves are specifically designed for fastreversing systems where backflow is a constant concern. In such critical service applications, nozzle check valves offer the following benefits.
- Minimizes the damaging effects of water hammer in fluid systems.
- Removal of chatter associated with conventional valves in reciprocating compressor service.
- Protects rotating equipment from damage due to flow reversal.
- Minimizes pressure loss in piping systems.
- Provides quick dynamic response reducing reverse velocity.

APPLICATIONS

- GAS Trausmission
  (Compressor Suction / Discharge)
- Power Generation
  (Cooling Water / Steam)
- Petrochemical Processing
- Water Tranmission(Pump Station)

SPECIFICATION

PRESSURE / SIZE	ANSI 125LB ~ 2500LB(2"~ 60")
BODY, PLATE MATERIAL	A536 Gr 65-45-12, A216 WCB CA15, Stainless Steel, DUPLEX, MONEL
SPRING MATERIAL	STS316WPA, INCONEL X-750
VALVE TEST	API 598, ANSI B16.34
FLANGES	ASME B16.5, B16.47, ANSI B16.1
END CONNECTION	FLANGE TYPE

DESCRIPTION OF PARTS

NO	PART NAME	Q'TY	MATERIALS (ASTM SPECIFICATION)
1	BODY	1	A536 Gr 65-45-12, A216 WCB , CA15, Stainless Steel, DUPLEX, MONEL
2	DISC	1	
3	DIFFUSER	1	
4	SPRING	1	STS316WPA, INCONEL-X750
5	SEAT	1	METAL TO METAL
6	DISC STEM	1	STAINLESS STEEL, DUPLEX, MONEL

NOZZLE CHECK VALVE DIMENSION

Size (inch)	Class (RF)	L(Short Pattern)	L(Long Pattern)	Weight (Kg)	Size (inch)	Class (RF)	L(Short Pattern)	L(Long Pattern)	Weight (Kg)	Size (inch)	Class (RF)	L(Short Pattern)	L(Long Pattern)	Weight (Kg)
2"	150	-	203	- /10	14"	150	475	787	347/428	36"	150	1,215	1,956	2,605/2,714
	300	-	267	- /13		300	475	838	445/538		300	1,215	2,083	3,670/4,358
	600	-	292	- /17		600	475	889	538/652		600	1,215	2,083	4,500/8.779
	900	-	368	- /36		900	473	1,29	695/1,328		900	1,190	-	7,250/ -
	1500	-	368	- /36		1,500	648	1257	1,600/2,237					
	2500	-	451	- /52										
3"	150	-	241	- /30	16"	150	545	864	415/489	42"	150	1,415	-	4,100/ -
	300	-	318	- /30		300	545	864	530/647		300	1,415	-	5,620/ -
	600	218	356	26/30		600	546	991	790/957		600	1,461	-	6,584/ -
	900	-	381	- /55		900	750	1,130	1220/1,463		900	1,524	-	9,920/ -
	1,500	-	470	- /78		1,500	750	1,384	1,840/2,488					
	2,500	-	578	- /119										
4"	150	-	292	- /48	18"	150	610	978	538/814	48"	150	1,461	-	5,275/ -
	300	-	356	- /48		300	610	978	690/820		300	1,461	-	5,325/ -
	600	250	432	50/74		600	810	1,92	1,355/1,547		600	1,615	-	10,250/ -
	900	-	457	- /100		900	775	1,219	1,440/2,021		900	1,626	-	14,400/ -
	1,500	-	546	- /123		1,500	813	1,537	2,700/3,677					
	2,500	-	673	- /168										
6"	150	280	356	65/76	20"	150	850	978	1,075/1,441	54"	150	1,850	-	9,450/ -
	300	268	445	88/95		300	810	1,016	1,090/1,173		300	1,850	-	10,140/ -
	600	300	559	100/193		600	810	1,194	1,380/1,537		600	1,829	-	12,400/ -
	900	391	610	193/257		900	869	1,321	2,120/2,941					
	1,500	403	05	270/365		1,500	869	1,664	2,950/4,176					
	2,500	403	914	485/593										
8"	150	280	495	85/194	24"	150	810	1,295	1,152/1,310	60"	150	2,035	-	10,800/ -
	300	311	533	190/204		300	810	1,346	1,370/1,514		300	2,035	-	11,100/ -
	600	311	660	203/250		600	810	1,397	1,935/2,411		600	2,159	-	18,500/ -
	900	346	737	290/335		900	1,016	1,549	3,182/3,686					
	1,500	346	832	365/457		1,500	869	1,943	5,190/6,046					
	2,500	449	1,022	700/873										
10"	150	365	622	220/243	28"	150	945	1,448	1,560/2,006					
	300	365	622	248/278		300	1,035	1,499	2,200/2,387					
	600	365	787	335/399		600	870	1,600	2,660/3,934					
	900	394	838	483/684		900	1,016	-	4,650/ -					
	1,500	418	991	628/897										
	2,500	562	1,270	1,227/1,650										
12"	150	438	699	282/285	30"	150	1,010	1,524	1,965/2,547					
	300	438	711	305/331		300	1,010	1,524	2,394/2645					
	600	438	838	426/516		600	1,010	1,651	3,000/3,935					
	900	457	965	675/885		900	1,026	-	4,750/ -					
	1,500	545	1,130	900/1,202										
	2,500	914	1,422	2,073/2,542										

VALVE SIZE	2″, 3″, 4″, ...,24″	26″,28″, ...,60″
FLANGE STANDARD	ANSI B16.5	ASME B16.47 SERIES A (MSS SP44)

TILTING TYPE

MODEL NO **TCV-1**

FEATURES

- Short disc stroke reduce water hammer.
  Disc counteraction has self cushioning movement.
- Disc position indicator-Make it possible to determine the opening and closing state of the disc.
- Inspection ports-allow up&down stream Seat access, mounting ports for dashpots.

APPLICATIONS

- PORTALE WATER
- WASTE WATER TREATMENT SYSTEM
- PRESSURIZED COOLANT SYSTEM
- POWER PLANT
- PUMP STATION

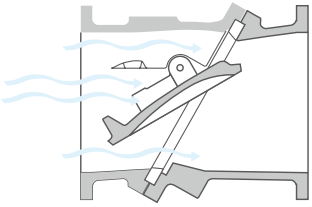

No-Slam Characteristics

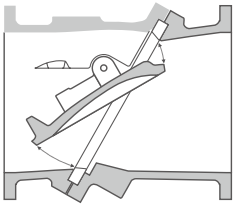

Unique disc movement

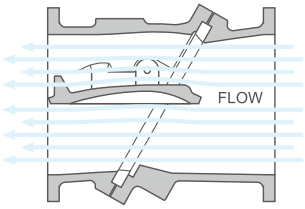

Laminar flow

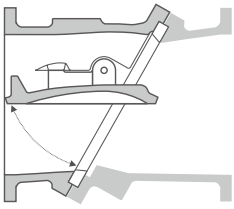

Rapid opening/
quicker closing

SPECIFICATION

PRESSURE / SIZE	ANSI 125LB ~ 300LB(4"~ 60")
BODY, PLATE MATERIAL	A126 CL.B, A536 Gr 65-45-12, A216 WCB CA15, Stainless Steel, DUPLEX, MONEL
VALVE TEST	API 598, ANSI B16.34
END CONNECTION	FLANGE TYPE

DESCRIPTION OF PARTS

NO	PART NAME	Q'TY	MATERIALS (ASTM SPECIFICATION)
1	HINGE BODY	1	ASTM A890 Gr. 4A
2	SEAT BODY	1	ASTM A890 Gr. 4A
3	BODY SEAL O-RING	1	VITON
4	BODY FLANGE BOLT	1set	316SS
5	SEAT RING	1	ASTM A890 Gr.4A
6	SEAT RING O-RING	1	VITON
7	DISC	1	ASTM A890 Gr. 4A
8	INSPECTION HOLE COVER BOLT	2	ASTM A890 Gr. 4A
9	IN. HOLE COVER O-RING	2	VITON
10	IN. HOLE COVER BOLT	2set	316SS
11	HINGE PIN	2	UNS S31803
12	HINGE PIN BUSH	2	UNS S31893
13	HINGE PIN COVER	2	ASTM A890 Gr.4A
14	HINGE PIN COVER O-RING	2	VITON
15	HINGE PIN COVER BOLT	2set	316SS
16	INDICATOR PIN	1	316SS
17	INDICATOR SHAFT	1	UNS S31803
18	INDICATOR WASHER	1	A276-316
19	INDICATOR	1	A276-316
20	INDICATOR PLATE	1	A276-316
21	INDICATOR NUT	1	A276-316
22	INDICATOR O-RING	2	VITON
23	GREASE FITTING	2	A276-316
24	LOCATING PIN	2	A276-316
	NAME PLATE	1	STAINLESS STEEL

- Available with various material based on customer's demand.

TILTING CHECK VALVE DIMENSION

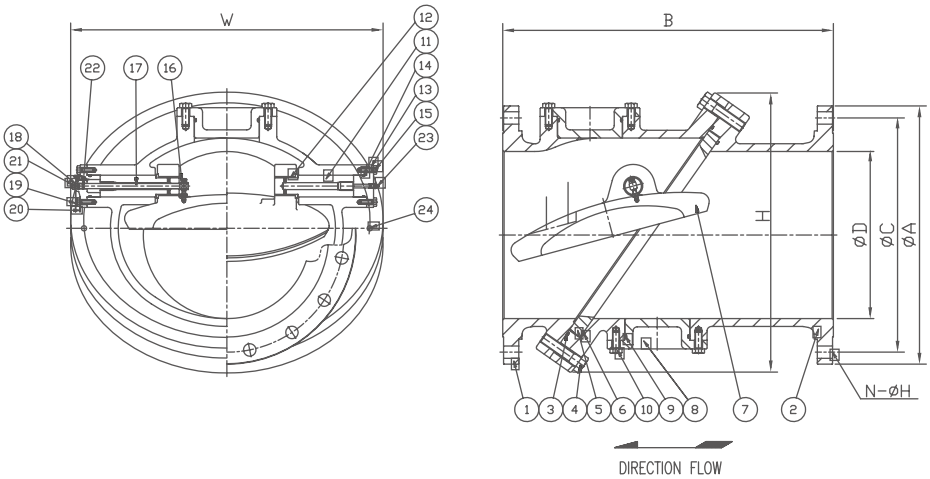

Size (inch)	Series	Dimensions							Weight (kg)
		ØA	B	ØC	ØD	H	W	N-ØH	
4"	125	230	292	191	100	254	330	8-3/4"	37
	150			190.5				8-5/8"	40
6"	125	280	318	241	150	330	406	8-7/8"	71
	150			241.3				8-3/4"	77
8"	125	345	495	299	200	406	483	8-7/8"	134
	150			298.5				8-3/4"	142
10"	125	405	622	362	250	457	584	12-1"	196
	150			362				12-7/8"	214
12"	125	485	609	432	300	535	660	12-1"	282
	150			431.8				12-7/8"	305
14"	125	535	762	476	350	597	737	12-1 1/8"	404
	150			476.3				12-1"	433
16"	125	595	762	540	400	711	813	16-1 1/8"	526
	150			539.8				16-1"	570
18"	125	635	838	578	450	762	914	16-1 1/4"	639
	150			577.9				16-1 1/8"	685
20"	125	700	813	635	500	813	991	20-1 1/4"	779
	150			635				20-1 1/4"	844
24"	125	815	965	749	600	940	1,169	20-1 3/8"	1,224
	150			749.3				20 1 3/8"	1,327
30"	125	985	1,321	914	750	1,143	1,397	20 1 3/8"	2,223
	150			914.4				20 1 3/8"	2,409
36"	125	4,470	1,511	1,086	900	1,296	1,651	32-1 5/8"	3,402
	150			1,085.8				32-1 5/8"	3,692
42"	125	1,345	1,588	1,257	1,050	1,499	1,854	36-1 5/8"	4,763
	150			1,257.3				36-1 5/8"	5,171
48"	125	1,510	1,651	1,422	1,200	1,753	2,083	44-1 5/8"	6,260
	150			1,422.4				44-1 5/8"	6,804
54"	125	1,685	1,981	1,594	1,350	1,905	3,211	44-2"	7,938
	150			1,594.8				44-1 7/8"	8,618
60"	125	1,855	2,210	1,759	1,500	2,191	2,377	52-2"	10,433
	150			1,759				52-1 7/8"	11,340

VALVE SIZE	4″, 6″, 8″, ...,24″	26″,28″, 30″, ..., 60″
FLANGE STANDARD	ANSI B 16.1 (125P) / ANSI B 16.5 (150P)	ASME B 16.1 (125P) / ASME B 16.47 SERIES A (150P)

SHORT PATTERN DESIGN

MODEL NO **SSV-1**

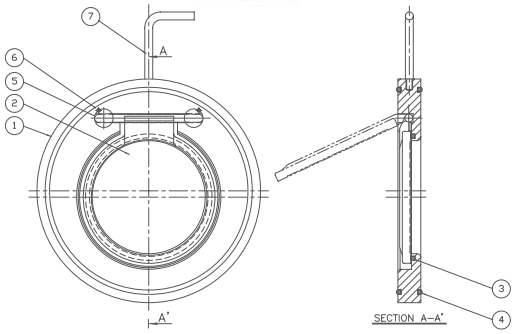

FEATURES

- The low weight and short FACE-TO-FACE Dimensions provide an economical, space-saving solution. Additionally, Flange gaskets are typically not required due to the built-in, body seal o-rings.
- The replaceable soft seal fitted in the body ensures a tight shut-off to prevent backflow.
- Easy to handle and maintain
- Minimal head loss

SPECIFICATION

DIAMETER	40A(1 1/2")~700A(28")
APPLICABLE PRESSURE	5K, 10K, PN6, PN10, PN16 CLASS 125, 150
CONNECTING ENDS	WAFER – FLAT FACE
TEST METHOD	KS B2304, API598

DESCRIPTION OF PARTS

NO	NAME	MATERIAL	Q'TY
1	BODY	A283, A105 A240-304, 316	1
2	CLAPPER PLATE	A351 CF8, CF8M	1
3	SEAT	NBR, VITON, EPDM	-
4	GASKET	NBR, VITON, EPDM	2
5	WASHER	304SS, 316SS	2
6	SCREW	304SS, 316SS	2
7	L-BOLT	304SS	1

- The material can be changed by customer's request.

LONG PATTERN DESIGN

MODEL NO **SSV-2**

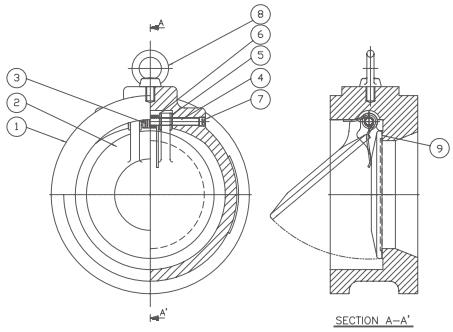

FEATURES

- Single disc-spring closure-provides unobstructed flow and reduces damaging water hammer.
- Light weight easier to handle and install.
- Rubber and metal seat is available

SPECIFICATION

DIAMETER	50A(2")~900A(36")
APPLICABLE PRESSURE	10K, 20K PN10, PN16, PN25 CLASS 125, 150, 300
CONNECTING ENDS	WAFER – FF & RF
TEST METHOD	KS B2304, API598

DESCRIPTION OF PARTS

NO	NAME	MATERIAL	Q'TY
1	BODY	A216 WCB, A351 CF8, CF8M	1
2	PLATE	A351 CF8, CF8M	1
3	SPRING	STS316WPA INCONEL X-750	2
4	HINGE PIN	A276-304, 316	1
5	BODY BEARING	STAINLESS STEEL/PTFE	2
6	SPRING BEARING	STAINLESS STEEL/PTFE	2
7	PLUG	A105 304SS, 316SS	1
8	EYE BOLT	A105	1
9	SEAT	METAL, RUBBER	-

- The material can be changed by customer's request.

DIMENSION

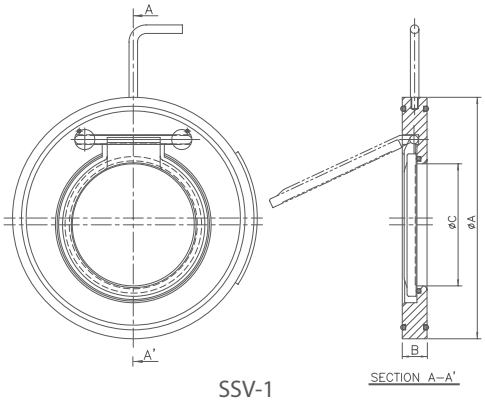

SSV-1
(Short type)

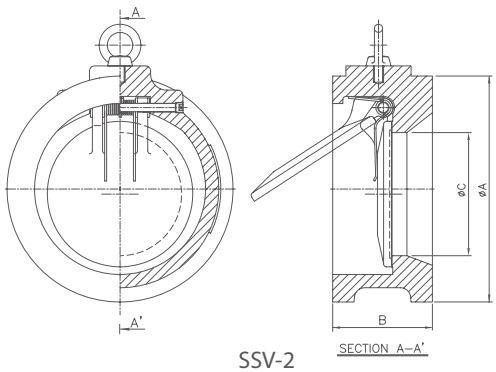

SSV-2
(Long type)

Size	Rating	Dimensions								Weight (Kg)	
		ØA	B		ØC	No of Bolts	Bolt Dia.	Bolt Length (mm)		Short	Long
			Short	Long				SHORT	LONG		
40A (1 1/2")	10K	86	19	-	22	4	M16	105	-	1.5	-
	150	86	19	-		4	1/2	110	-	1.1	-
50A (2")	10K	101	19	60	31	4	M16	110	131	1.2	2.4
	150	105	19	60		4	5/8	115	160	1.3	2.5
65A (2 1/2")	10K	121	19	67	40	4	M16	110	143	1.6	3.2
	150	124	19	67		4	5/8	120	175	1.7	3.4
80A (3")	10K	131	19	73	54	8	M16	120	151	1.9	4
	150	137	19	73		4	5/8	125	180	2	4.5
100A (4")	10K	156	20	73	65	8	M16	120	155	2.5	6
	150	175	19	73		8	5/8	125	180	2.7	7
125A (5")	10K	187	21	86	92	8	M20	130	180	3.1	9
	150	197	19	86		8	3/4	135	200	3.4	10
150A (6")	10K	217	22	98	110	8	M20	140	195	4.9	13
	150	222	19	98		8	3/4	135	215	5.5	14
200A (8")	10K	267	28	127	143	12	M20	140	230	11	20
	150	279	29	127		8	3/4	150	250	13	22
250A (10")	10K	330	30	146	187	12	M22	140	255	15	34
	150	340	29	146		12	7/8	165	285	18	37
300A (12")	10K	375	38	181	215	16	M22	140	295	25	49
	150	410	38	181		12	7/8	180	325	28	56
350A (14")	10K	420	41	184	260	16	M22	150	300	35	54
	150	451	44	184		12	1	200	340	40	80
400A (16")	10K	483	48	191	310	16	M24	170	315	55	86
	150	514	51	191		16	1	210	350	60	100
450A (18")	10K	538	51	203	347	20	M24	180	325	68	104
	150	549	60	203		16	1 1/8	230	375	75	110
500A (20")	10K	593	64	219	387	20	M24	185	350	108	154
	150	606	64	219		20	1 1/8	240	400	120	169
600A (24")	10K	697	75	222	460	24	M30	205	370	165	240
	150	718	75	222		20	1 1/4	270	420	175	265

- Valve sizes not listed above are available on application, please contact us.

FOOT VALVE / DUAL TYPE

MODEL NO **DFV-1**

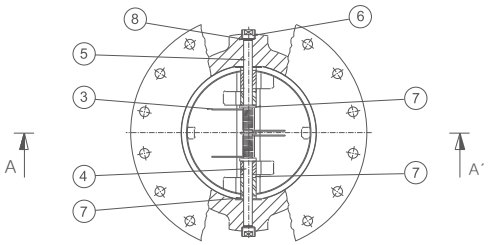

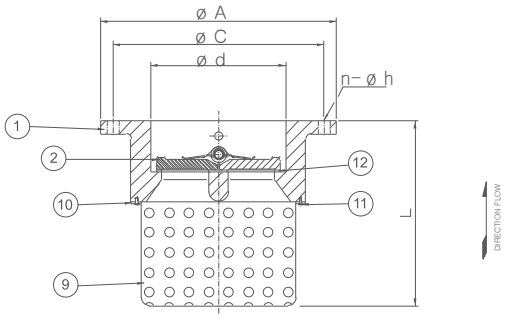

SECTION A–A´

SPECIFICATION

DIAMETER	50A(2") ~ 1800A(72")
APPLICABLE PRESSURE	10K ~ 20K 150LB ~ 300LB
CONNECTING ENDS	FLANGE TYPE
TEST METHOD	According to KS B2304, API 598
NUMBER OF SPRING	1-½"~ 5": (1EA), 6"~ 22" : (2EA) 24" and over : (4EA)

FEATURES

- Elastic body seat that contacts the plate is formed with body and ensures the perfect sealing even after the prolonged use.
- Simple design and heavy duty stainless steel screening is easy to maintain.
- Body and plate is light weight, and designed to prevent the additional loading when operating the pump.
- The internal epoxy coating on the in/out side of the valve is possible.

DIMENSIONS(150LB)

SIZE	øA	øC	øD	L	N-øH
50A	155	120	60	160	4-19
65A	175	140	73	175	4-19
80A	185	150	89	190	8-19
100A	210	175	114	190	8-19
125A	250	210	141	215	8-23
150A	280	240	168	245	8-23
200A	330	290	219	300	12-23
250A	400	355	274	355	12-25
300A	445	400	324	400	16-25
350A	490	445	356	530	16-25
400A	560	510	406	550	16-27

- Custom-tailored fabrication is available for the size over 450A(18") and the class of ansi 150LB.

DESCRIPTION OF PARTS

NO	NAME	MATERIAL		Q'TY
		10K	150LB	
1	BODY	FC200	A216 Gr, WCB	1
2	PLATE	SCS13, BC6	CF8	2
3	LOW SPRING	STS 316 WPA		1-4
4	HINGE PIN	STS 304	A276-304	1
5	STOP PIN	STS 304	A276-304	1
6	PLUG	SM 25C	A576 1025	4
7	BEARING	PTFE		6-9
8	PIN STABILIZER	RUBBER		4
9	SCREEN	STS 304		1
10	SCREEN PAD	STS 304		1
11	BOLT	STS 304		4-8
12	SEAT	NBR, EPDM		

LEVER TYPE

MODEL NO **SFV-1**

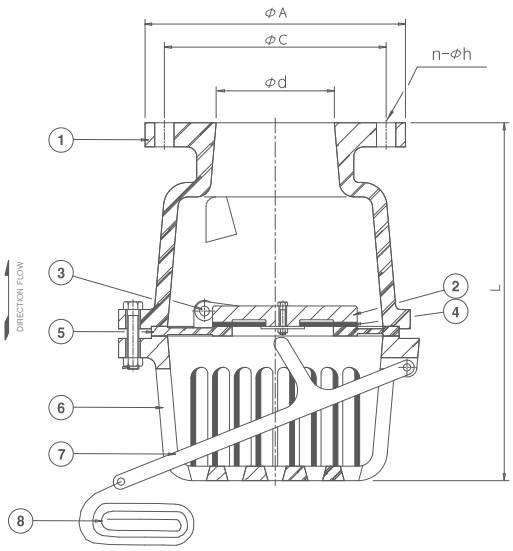

SPECIFICATION

DIAMETER	50A(2") ~ 600A(24")
APPLICABLE PRESSURE	10K ~ 20K 150LB ~ 300LB
CONNECTING ENDS	FLANGE TYPE
TEST METHOD	According to KS B2304, API 598

TABLE OF DIMENSIONS(10K)

SIZE	øA	øC	L	N-øH
50A	155	120	200	4-19
65A	175	140	205	4-19
80A	185	150	210	8-19
100A	210	175	270	8-19
125A	250	210	315	8-23
150A	280	240	360	8-23
200A	330	290	405	12-23
250A	400	355	495	12-25
300A	445	400	570	16-25
350A	490	445	685	16-25
400A	560	510	750	16-27
450A	620	565	850	20-27
500A	675	620	980	20-27
600A	795	730	1,140	24-33

- Valve size is not specified in the above table, please contact us.

TABLE OF MATERIALS

NO	PART NAME	MATERIAL	
1	BODY	SCS13	SCS14
2	DISC	SCS13	SCS14
3	PIN	STS 304	STS 316
4	PACKING	URETHANE, PTFE, NBR	
5	SEAT	SCS13	SCS14
6	SCREEN	SCS13	SCS14
7	LEVER	STS 304	STS 316
8	WIRE ROPE	STS 304	

SMOLENSKY CHECK VALVE

MODEL NO **SMC-1**

< Patent No : 10-1383676 >

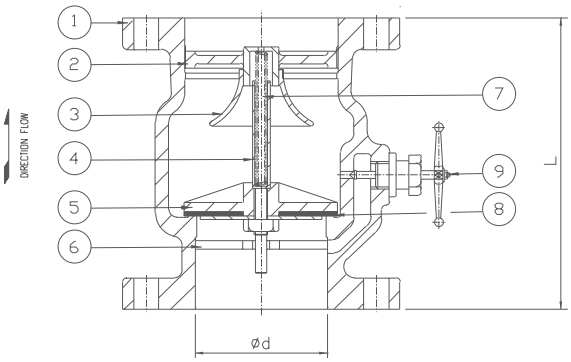

FEATURES

- No water hammer, reaction time of disc is very quick and it is closed with the spring tension before the reverse flow activated.
- Design is simple and easy for repair.
- By-pass valve installed to the body easily drains the water in case of repair/replacement.
- Rubber packing ensures the tight sealing and it is simple to replace.
- Horizontal and vertical installation is applicable. In case of horizontal installation of large diameter valves, it is necessary to use supports.
- Standard flange ends conform to KS but we can meet buyer's flange ends requirement.
- Body material can be Cast Steel, Bronze and SUS, etc. depending on the fluid to be used, temparature and pressure.

DIMENSION

SIZE	ØD	10K(L)	20K(L)
50A	50	182	184
65A	65	194	200
80A	80	210	218
100A	100	218	220
125A	125	263	263
150A	150	288	291
200A	200	407	420
250A	250	460	480
300A	300	600	600

- For over Ø350, it. is going to be done by reguest.
- 1 Piece Body Design : 50A ~ 250A
- 2 Pieces Body Design : 300A and over

SPECIFICATION

DIAMETER	50A(2") ~ 600A(24")
APPLICABLE PRESSURE	10K ~ 40K 150LB ~ 300LB
CONNECTING ENDS	FLANGE TYPE
TEST METHOD	WATER, AIR, GAS AND OIL
APPLICABLE TEMPERATURE	URETHANE, NBR : Under 100°C PTFE(Teflon) : Under 240°C

DESCRIPTION OF PARTS

NO	NAME	MATERIAL			Q'TY
1	BODY	SCPH2	SCS13	SCS14	1
2	TOP GUIDE	SCS13	SCS13	SCS14	1
3	BUFFER RING	SCS13	SCS13	SCS14	1
4	STEM	STS304	STS 304	STS 316	1
5	DISC	SCS13	SCS13	SCS14	1
6	BOTTOM GUIDE	SCS13	SCS13	SCS14	1
7	SPRING	STS 316 WPA			1
8	DISC SEAT	EPPM, URETHANE, NBR, PTFE			1
9	BY PASS VALVE	STS 304	STS 304	STS316	1

ANTI PRESSURE SURGE TYPE

MODEL NO **SMC-1S**

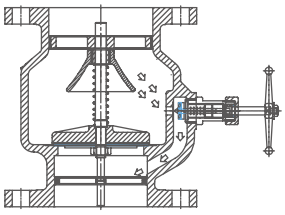

BY PASS VALVE FULL OPEN
Bypass the fluid inside the valve

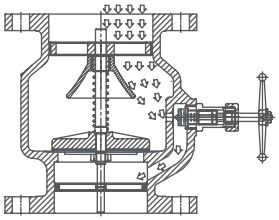

BY PASS VALVE PARTIAL OPEN
When a water-hammer occurs, relieves rising surge pressure

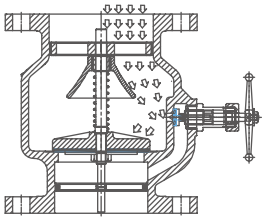

BY PASS VALVE FULL CLOSE
Bypass line is blocked

- Please contact us if you would like to know more details.

BEST INSTALLATION PRACTICES

To maximise the lifecycle of a Dual plate check valve,
it should be installed in accordance with following installation practices.
Check valve should be installed direction arrow to match the flow direction.

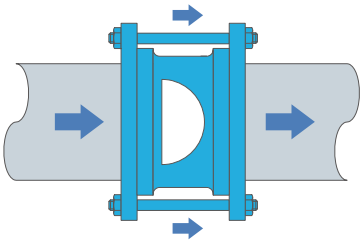

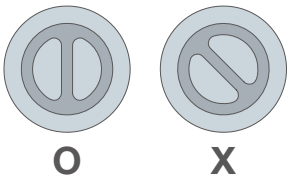

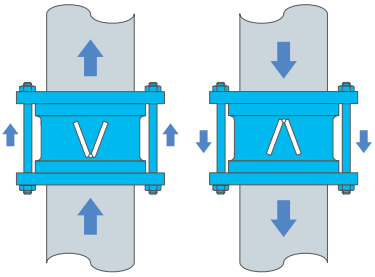

- **Horizontal Installation**
  Pins must be vertical.

- **Vertical Installation**
  For vertical flow down in larger valve size
  (10" and above), please contact "SOOSUNG VALVE".

Installed in the bending line

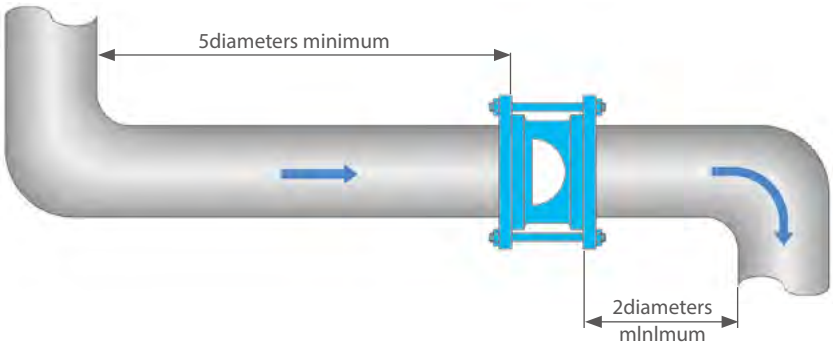

Check valve should be installed a minimum of 5 diameter downstream of a , bend(elbow) to ensure flow at valve is fully developed and turbulence is minimised.

Check valve should be installed a minimum of 2 diameters upstream of a bend(elbow) to aboid choked flow.

Installed with other valve

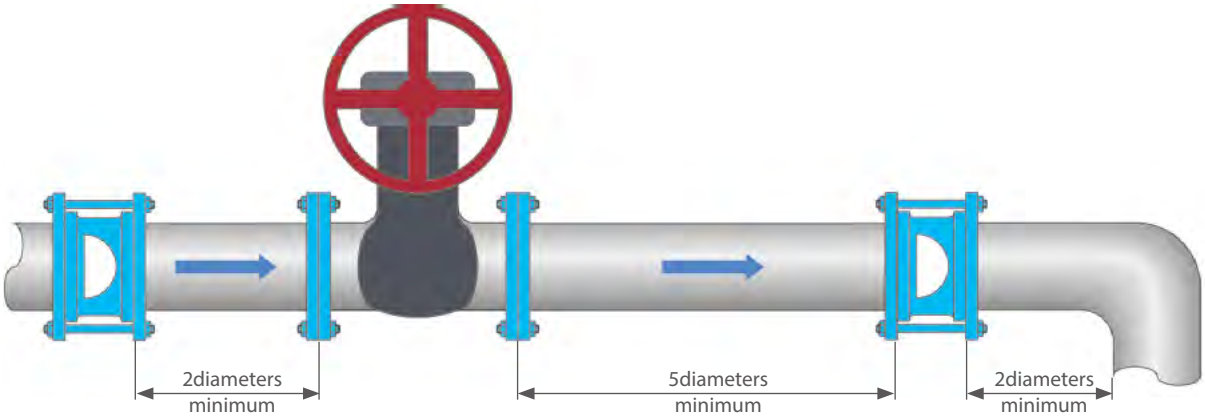

when installed neal a valve, the check valve should be installed a minimum of 5 diameters downstream and 2 diameters upstream.

ELASTOMER GENERAL TABLE

Elastomer seats have been chosen to satisty every service need. Application suggested derive from recommendation given by the elastomer manufacturers and are purely indicative. Since many factors influence corrosion and abrasion (type of fluid, concentration, temperature, turbulence impurities etc.), the final choice is to be taken by the customer, based on characteristics and specific application.

Name	Composition	General Application	Temperature Limit	Other Limits
EPDM	Ethylene-Propylene Terpolymer	Water steam, Sea water Brine, Esters	-35°C ~ +110°C -30°F ~ +230°F	Not recommended for hydrocarbons-oils-fats
EPDM HIGH/TEMP (HT)	Copolymer	Ketone, Alkalis Caustic Soda	-35°C ~ +150°C -30°F ~ +300°F	Not recommended for hydrocarbons-oils-fats
BUNA N (NBR)	Copolymer of Bu-tadiene and hig Acryloitrile	Hydrocarbons Oils and gas Air, Gasoline	-1°C ~ +100°C 0°C ~ +212°C	Not recommended for Solvents-Ben-zene-Xylol
Neoprene	Chloro butadiene	Fats, Oils Diluted mineral acids, Alkalis	-18°C ~ +90°C 0°F ~ +194°F	Not recommended for Ketones, thin-ners Concentrated acids.
Hypalon	Chlorosulfonated Polyethylend	Mineral acids Organic acids, Fats Oxidising substances	-18°C ~ +100°C 0°C ~ +212°C	Not recommended for Nitric acid- Steam Ketones
Viton	Fluorocarbon Polymer	Acids, Oils Hydrocarbons	-10°C ~ +160°C -14°F ~ +320°F	Not recommended for Steam Freon 22 Solvents-ketones-Esters-Alkalis
Natural rubber	Latex(vegetable)	Abrasive products	-35°C ~ +65°C -30°C ~ +150°C	Not recommended for Steam oils-Hydrocarbons
Silicone	Organic silicone Polymer	Food & Beverage	-30°C ~ +150°C -22°F ~ +300°F	Not recommended for Steam Solvents-Hydrocarbons
Teflon	Polytetrafluoro Ethylene	Solvents Corrosive Prod-ucts	-40°C ~ +180°C -40°C ~ +356°C	Not recommended for Fluid containing powders. Alkaline metals(sodium. potassium) Gaseous Fluorine

NOTES:

The above table is merely indicative. The customer is expected to make the final decision on the suitability of seat materials for their specific applications. Therefore, in any case, we are not responsibie for the elastomers selected by the customers.

CONVERSION TABLE OF KS, JIS AND ASTM MATERIAL STANDARD FOR VALVES

Application	KS Standard and material symbol		JIS Standare and material symbol		ASTM Standare and material symbol	
Steel casting for high Temp and high pressure	D4107	SCPH2	G5151	SCPH2	A216	WCB
	D4107	SCPH11	G5151	SCPH11	A217	WC1
	D4107	SCPH21	G5151	SCPH21	A217	WC6
	D4107	SCPH31	G5151	SCPH31	A217	WC9
	D4107	SCPH61	G5151	SCPH61	A217	C5
	D4107	SCPH23	G5151	SCPH23	A389	C24
Steel casting for Low Temp and high pressure	D4111	SCPL1	G5152	SCPL1	A352	LCB
	D4111	SCPL11	G5152	SCPL11	A352	LC1
	D4111	SCPL21	G5152	SCPL21	A352	LC2
	D4111	SCPL31	G5152	SCPL31	A217	LC3
Stainless steel castings	D4103	SSC1	G5121	SCS1	A217	CA15
	D4103	SSC2	G5121	SCS2	A351	
	D4103	SSC13A	G5121	SCS13A	A351	CF8
	D4103	SSC19	G5121	SCS19	A351	CF3
	D4103	SSC14A	G5121	SCS14A	A351	CF8M
	D4103	SSC16	G5121	SCS16	A351	CF3M
	D4103	SSC21	G5121	SCS21	A351	CF8C
	D4103	SSC18	G5121	SCS18	A351	CK20
Gray cast Iron	D4301	gC200	G5501	FC200	A126	B
Black heart Malleable Iron castings	D4303	BMC28	G5702	FCMB28	A197	
	D4303	BMC35	G5702	FCMB35	A197	32510
Carbon steel Forgings	D3710	SF45	G3201	SF45	A105	
Bronze castings	D6002	BC6	H5111	BC6	B584	C83600
	D6002	BC5	H5111	BC5		
Aluminum Bronze castings	D6015	AlBrC3	H5114	AlBC3	B148	C95800
Copper and Copper Alloy Bars	D5101	C3604BD	H3250	C3604BD	B16	
	D5101	C3771BD	H3250	C3771BD	B142	C37700
	D5101	C6191BD	H3250	C6191BD	B150	N0619
Carbon steel for Mechanical structure	D3752	SM10C	G4051	S10C	A576	1010
	D3752	SM20C	G4051	S20C	A576	1020
	D3752	SM25C	G4051	S25C	A576	1025
	D3752	SM45C	G4051	S45C	A576	1045
Steel for general Structure	D3503	SS400	G3101	SS400	A283	D
High temperature Alloy steel Bolts	D3706	STS304	G4303	SUS304	A193	B8
	D3755	SNB7	G4107	SNB7	A193	B7
	D3755	SNB16	G4107	SNB16	A193	B16
Stainless steel Bars	D3706	STS304-B	G4303	SUS304-B	A479	304
	D3706	STS304L-B	G4303	SUS304L-B	A479	304L
	D3706	STS316-B	G4303	SUS316-B	A479	316
	D3706	STS316L-B	G4303	SUS316L-B	A479	316L
	D3706	STS374-B	G4303	SUS374-B	A479	347
	D3706	STS321-B	G4303	SUS321-B	A479	321
	D3706	STS310S-B	G4303	SUS310S-B		
	D3706	STS630-B	G4303	SUS630-B		
Stainless steel Forgings	D4115	STSF304P	G3214	SUSF304P	A182	F304
	D4115	STSF304L	G3214	SUSF304L	A182	F304L
	D4115	STSF310	G3214	SUSF310	A182	F310
	D4115	STSF316	G3214	SUSF316	A182	F316
	D4115	STSF316L	G3214	SUSF316L	A182	F316L
	D4115	STSF347	G3214	SUSF347	A182	F347
Hot Rolled stainless steel Plates	D3705	STS304HP	G4304	SUS304HP	A240	304
	D3705	STS304LHP	G4304	SUS304LHP	A240	304L
	D3705	STS316HP	G4304	SUS316HP	A240	316
	D3705	STS316LHP	G4304	SUS316LHP	A240	316L
Carbon steel pipes for high temp pipeline	D3570	SPHT38	G3456	STPT38	A106	
	D3570	SPHT42	G3456	STPT42		
	D3570	SPHT49	G3456	STPT49		
Carbon steel pipes for pipeline	D3507	SGP	G3452	SGP	A120	

PRESSURE - TEMPERATURE RATINGS

		WORKING PRESSURE. PSIG								
	TEMP °F	A216 WCB A105	A217 C5 A182 F5a	A217 WC6 A182 F17	A217 WC9 A182 F22	A325 LC3 A350 LF3	A351 CF8M A182 F315	A351 CF3M	A351 CF8 A182 F304	A351 CF3
CLASS 150	-20 to 100°	285	290	290	290	290	275	275	275	275
	200	260	260	260	260	260	240	240	235	235
	300	230	230	230	230	230	215	215	205	205
	400	200	200	200	200	220	195	195	180	180
	500	170	170	170	170	170	170	170	170	170
	600	140	150	140	140	140	140	140	140	140
	650	125	125	125	125	125	125	125	125	125
	700	110	110	110	110	-	110	110	110	110
	750	95	95	95	95	-	95	95	95	95
	800	80	80	80	80	-	80	80	80	80
	850	65	65	65	65	-	65	65	65	-
	900	50	50	50	50	-	50	-	50	-
	950	35	35	35	35	-	35	-	35	-
	1,000	20	20	20	20	-	20	-	20	-
	1,050	-	20	20	20	-	20	-	20	-
	1,100	-	20	20	20	-	20	-	20	-
	1,150	-	20	-	-	-	20	-	20	-
	1,200	-	20	-	-	-	20	-	20	-
	1,250	-	-	-	-	-	20	-	20	-
	1,300	-	-	-	-	-	20	-	20	-
	1,350	-	-	-	-	-	20	-	20	-
	1,400	-	-	-	-	-	20	-	20	-
	1,450	-	-	-	-	-	20	-	15	-
	1,500	-	-	-	-	-	15	-	10	-
CLASS 300	-20 to 100°	740	750	750	750	750	720	720	720	720
	200	675	750	710	715	750	620	620	600	600
	300	655	730	675	675	730	560	560	530	530
	400	635	705	660	650	705	515	515	470	470
	500	600	665	650	640	685	480	480	435	435
	600	550	605	605	605	608	450	450	415	415
	650	656	590	590	590	590	445	445	410	410
	700	656	570	570	570	-	430	430	405	405
	750	505	530	530	530	-	425	425	400	400
	800	410	500	510	510	-	415	415	395	395
	850	270	440	485	485	-	405	405	390	-
	900	170	355	460	450	-	395	-	385	-
	950	105	260	380	380	-	385	-	375	-
	1,000	50	190	225	270	-	365	-	325	-
	1,050	-	140	140	200	-	360	-	310	-
	1,100	-	105	95	115	-	325	-	260	-
	1,150	-	70	-	-	-	275	-	195	-
	1,200	-	45	-	-	-	205	-	155	-
	1,250	-	-	-	-	-	180	-	110	-
	1,300	-	-	-	-	-	140	-	85	-
	1,350	-	-	-	-	-	105	-	60	-
	1,400	-	-	-	-	-	75	-	50	-
	1,450	-	-	-	-	-	60	-	35	-
	1,500	-	-	-	-	-	40	-	25	-
CLASS 600	-20 to 100°	1,450	1,500	1,500	1,500	1,500	1,440	1,440	1,440	1,440
	200	1,350	1,500	1,425	1,430	1,500	1,240	1,240	1,200	1,200
	300	1,315	1,455	1,345	1,355	1,455	1,120	1,120	1,055	1,055
	400	1,270	1,410	1,315	1,295	1,410	1,030	1,030	940	940
	500	1,200	1,300	1,285	1,280	1,330	955	955	875	875
	600	1,095	1,210	1,210	1,210	1,210	905	905	830	830
	650	1,075	1,170	1,175	1,175	1,175	890	890	815	815
	700	1,065	1,135	1,135	1,135	-	885	865	805	805
	750	1,010	1,065	1,065	1,065	-	845	845	795	795
	800	825	995	1,015	1,015	-	830	830	790	790
	850	535	880	975	975	-	810	810	780	-
	900	345	705	900	900	-	790	-	770	-
	950	205	520	755	755	-	775	-	750	-
	1,000	105	385	445	535	-	725	-	645	-
	1,050	-	280	275	400	-	720	-	620	-
	1,100	-	205	190	225	-	645	-	515	-
	1,150	-	150	-	-	-	550	-	390	-
	1,200	-	90	-	-	-	410	-	310	-
	1,250	-	-	-	-	-	365	-	220	-
	1,300	-	-	-	-	-	275	-	165	-
	1,350	-	-	-	-	-	205	-	125	-
	1,400	-	-	-	-	-	150	-	95	-
	1,450	-	-	-	-	-	115	-	70	-
	1,500	-	-	-	-	-	85	-	50	-
HYDROSTATIC TEST PRESSURES IN POUNDS PER SQUARE INCH GAUGE(psig)										
CLASS 150	SHELL	450	450	450	450	400	375	375	375	375
	SEAT	315	315	315	315	290	260	260	260	260
CLASS 300	SHELL	1,125	1,125	1,125	1,125	1,050	925	925	925	925
	SEAT	815	825	825	825	765	675	675	675	675
CLASS 600	SHELL	2,225	2,250	2,250	2,250	2,100	1,875	1,875	1,875	1,875
	SEAT	1,630	1,650	1,650	1,650	1,530	1,360	1,360	1,360	1,360

PRESSURE - TEMPERATURE RATINGS

CLASS	TEMP °F	A216WCB A105	A217 C5 A182 F5a	A217 WC6 A182 F11	A217 WC9 A182 F22	A352 LC3 A350 LF3	A351 CF8M A182 F315	A351 CF3M	A351 CF8 A182 F304	A351 CF3
		WORKING PRESSURE. PSIG								
CLASS 900	-20 to 100°	2,220	2,250	2,250	2,250	2,250	2,160	2,160	2,160	2,160
	200	2,025	2,250	2,135	2,150	2,250	1,860	1,850	1,800	1,800
	300	1,970	2,185	2,020	2,030	2,185	1,540	1,540	1,410	1,410
	400	1,900	2,115	1,975	1,945	2,115	1,540	1,540	1,410	1,410
	500	1,795	1,995	1,925	1,920	1,995	1,435	1,435	1,310	1,310
	600	1,640	1,815	1,815	1,815	1,815	1,355	1,355	1,245	1,245
	650	1,610	1,765	1,765	1,765	1,765	1,330	1,330	1,225	1,225
	700	1,600	1,705	1,705	1,705	-	1,295	1,295	1,210	1,210
	750	1,510	1,595	1,595	1,595	-	1,270	1,270	1,195	1,195
	800	1,235	1,490	1,525	1,525	-	1,245	1,245	1,180	1,180
	850	850	1,315	1,460	1,460	-	1,215	1,215	1,165	-
	900	515	1,060	1,350	1,350	-	1,180	-	1,150	-
	950	310	780	1,130	1,130	-	1,160	-	1,125	-
	1,000	155	575	670	805	-	1,090	-	965	-
	1,050	-	420	410	595	-	1,080	-	925	-
	1,100	-	310	290	340	-	965	-	770	-
	1,150	-	205	-	-	-	825	-	585	-
	1,200	-	135	-	-	-	620	-	465	-
	1,250	-	-	-	-	-	545	-	330	-
	1,300	-	-	-	-	-	410	-	245	-
	1,350	-	-	-	-	-	310	-	185	-
	1,400	-	-	-	-	-	225	-	145	-
	1,450	-	-	-	-	-	175	-	105	-
	1,500	-	-	-	-	-	125	-	70	-
CLASS 1500	-20 to 100°	3,750	3,750	3,750	3,750	3,750	3,600	3,600	3,600	3,600
	200	3,375	3,750	3,560	3,580	3,750	3,095	3,095	3,000	3,000
	300	3,280	3,640	3,365	3,385	3,640	2,795	2,795	2,640	2,640
	400	3,170	3,530	3,290	3,240	3,530	2,570	2,570	2,350	2,350
	500	2,995	3,325	3,210	3,200	3,325	2,390	2,390	2,185	2,185
	600	2,735	3,025	3,025	3,025	3,025	2,255	2,255	2,075	2,075
	650	2,685	2,940	2,940	2,940	2,940	2,220	2,220	2,040	2,040
	700	2,665	2,840	2,840	2,840	-	2,160	2,160	2,015	2,015
	750	2,520	2,660	2,660	2,660	-	2,110	2,110	1,990	1,990
	800	2,060	2,485	2,540	2,540	-	2,075	2,075	1,970	1,970
	850	1,340	2,195	2,435	2,435	-	2,030	2,030	1,945	-
	900	860	1,765	2,245	2,245	-	1,970	-	1,920	-
	950	515	1,305	1,885	1,885	-	1,930	-	1,870	-
	1,000	260	960	1,115	1,340	-	1,820	-	1,610	-
	1,050	-	705	685	995	-	1,800	-	1,545	-
	1,100	-	515	480	565	-	1,610	-	1,285	-
	1,150	-	345	-	-	-	1,370	-	980	-
	1,200	-	225	-	-	-	1,030	-	770	-
	1,250	-	-	-	-	-	910	-	550	-
	1,300	-	-	-	-	-	685	-	410	-
	1,350	-	-	-	-	-	515	-	310	-
	1,400	-	-	-	-	-	380	-	240	-
	1,450	-	-	-	-	-	290	-	170	-
	1,500	-	-	-	-	-	205	-	120	-
CLASS 2500	-20 to 100°	6,170	6,250	6,250	6,250	6,250	6,000	6,000	6,000	6,000
	200	5,625	6,250	5,930	5,965	6,250	5,160	5,160	5,000	5,000
	300	5,470	6,070	5,605	5,640	6,070	4,660	4,660	4,400	4,400
	400	5,280	5,880	5,485	5,400	5,880	4,280	4,280	3,920	3,920
	500	4,990	5,540	5,350	5,330	5,540	3,980	3,980	3,640	3,640
	600	4,560	5,040	5,040	5,040	5,040	3,760	3,760	3,460	3,460
	650	4,475	4,905	4,905	4,905	4,905	3,700	3,700	3,400	3,400
	700	4,440	4,730	4,730	4,730	-	3,600	3,600	3,360	3,360
	750	4,200	4,430	4,430	4,430	-	3,520	3,520	3,320	3,320
	800	3,430	4,145	4,230	4,320	-	3,460	3,450	3,280	3,280
	850	2,230	3,660	4,060	4,060	-	3,320	3,320	3,240	-
	900	1,430	2,945	3,745	3,745	-	3,280	-	3,200	-
	950	860	2,170	3,145	3,145	-	3,220	-	3,120	-
	1,000	430	1,600	1,860	2,230	-	3,030	-	2,685	-
	1,050	-	1,170	1,145	1,660	-	3,000	-	2,570	-
	1,100	-	860	800	945	-	2,685	-	2,145	-
	1,150	-	570	-	-	-	2,285	-	1,630	-
	1,200	-	370	-	-	-	1,715	-	1,285	-
	1,250	-	-	-	-	-	1,515	-	915	-
	1,300	-	-	-	-	-	1,145	-	685	-
	1,350	-	-	-	-	-	860	-	515	-
	1,400	-	-	-	-	-	630	-	400	-
	1,450	-	-	-	-	-	485	-	285	-
	1,500	-	-	-	-	-	345	-	200	-
		HYDROSTATIC TEST PRESSURES IN POUNDS PER SQUARE INCH GAUGE(psig)								
CLASS 900	SHELL	3,350	3,375	3,375	3,375	3,375	2,775	2,775	2,775	2,775
	SEAT	2,440	2,475	2,475	2,475	2,475	2,035	2,035	2,035	2,035
CLASS 1500	SHELL	5,575	5,629	5,625	5,625	5,625	4,650	4,650	4,650	4,650
	SEAT	4,075	4,125	4,125	4,125	4,125	3,395	3,395	3,395	3,395
CLASS 2500	SHELL	9,275	9,375	9,375	9,375	9,375	7,725	7,725	7,725	7,725
	SEAT	6,785	6,875	6,875	6,875	6,875	5,660	5,660	5,660	5,660

Specifications and features are subject to change without prior notice.

SOOSUNG Valve

14, Majuag 5-ro, Seo-gu, Incheon, Korea
TEL : 82-32-569-4230 FAX : 82-32-569-4234
www.duocheck.co.kr
Email : soosung@duocheck.co.kr

REV.03-2017

www.duocheck.co.kr

POST INDICATOR GATE VALVE

Working on the Basis of Quality and Trust

UL LISTED

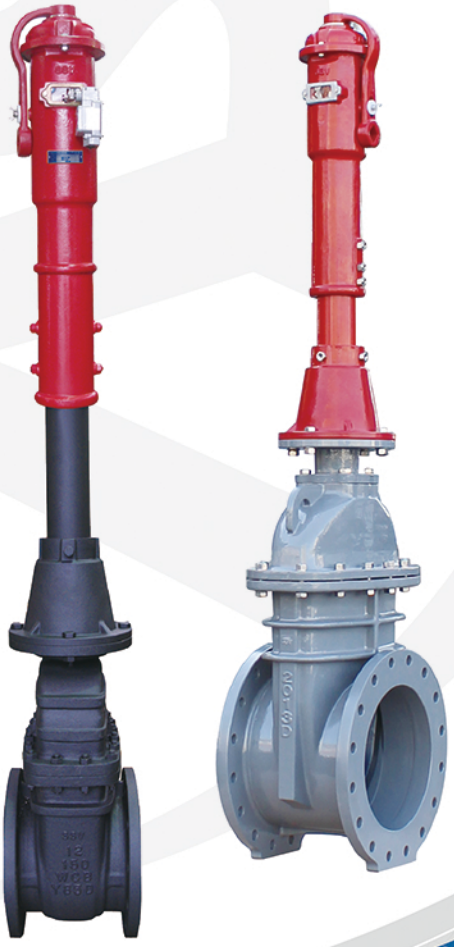

SSV SOOSUNG Valve

FEATURE

It is a structure that the stem does not move up and down when opening and closing the disc.
It is installed on the pipe lines of the ground-hydrants and it can be opened and closed for hydrant maintenance.

DRAWING

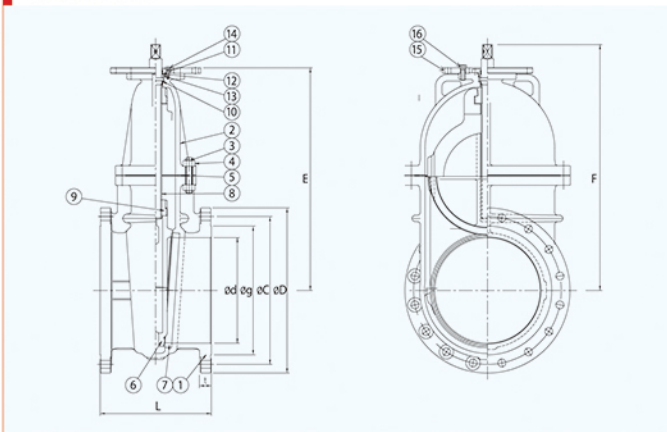

MATERIAL

NO	DESCRIPTION		Q'ty	MATERIAL	NO	DESCRIPTION	Q'ty	MATERIAL
1	Body		1	A126 WCB/A395	9	SLEEVE	1	B62/B584 C83600
2	BONNET		1	A126 WCB/A395	10	BONNET BUSH	1	B62/B584 C83600
3	BONNET BOLT		1set	A193-B7	11	GRAND FLANGE	1	A216 WCB
4	BONNET NUT		1set	A194-2H	12	PACKING O-RING	2	NBR
5	GASKET		1	304SS/GRAPHITE	13	GRAND O-RING	2	NBR
6	DISC	4"~6"	1	A217-CA15	14	GRAND BOLT	1set	304SS
		8"~24"	1	A216 WCB_13CR	15	MOUNTAIN FLANGE	1	A283 C
7	SEAT RING		1	A105+13CR FACE	16	MOUNTAIN BOLT	1set	304SS
8	STEM		1	A276-304				

• The materials above are subject to change upon customer's request.

DIMENSION

SIZE	L	FLNAGED END DIMENSION								Weight
		d	g	C	D	t	n-Øh	E	F	(kg)
4"	229	100	157.2	190.5	230	24.3	8-19	308	354	44
6"	267	150	215.9	241.3	280	25.9	8-22.3	398.5	448	70
8"	292	201	269.9	298.5	345	29	8-22.3	477.5	527	106
10"	330	252	323.8	362	405	30.6	12-25.4	585	650	167
12"	356	303	381	431.8	485	32.2	12-25.4	670	740	239
14"	381	334	412.8	476.3	535	35.4	12-28.6	737	802	345
16"	406	385	469.9	539.8	595	37	16-28.6	813	898	490
18"	432	436	533.4	577.9	635	40.1	16-32	921.5	1005	578
20"	457	487	584.2	635	700	43.3	20-32	1026.5	1110	731
24"	508	589	692.2	749.3	815	48.1	20-35	1194.5	1286	1043

• Face to Face Dimension ASME B 16.10, Flange Dimension ASME B 16.5

SPECIFICATION

	ASME B16.34	UL Listed
SIZE	4"~24"	4"~24"
WATER WORKING PRESSURE	CLASS 150	MAX 250PSI (Fire Protection)
END CONNECTION	FLANGED	FLANGED
BODY MATERIAL	CAST STEEL DUCTILE IRON	CAST STEEL DUCTILE IRON

Non Rising Stem Gate Valve (NRS GATE VALVE)

Indicator Post (ADJUSTABLE TYPE)

FEATURE

- Attached to NRS GATE VALVE on the fire fighting water pipe and it can control VALVE-OPENING and CLOSING from the ground via LEVER or GEAR TYPE.
- The status of valve opening and closing is checkable via transparent box on the indicator post. As a result, maintenance is much easier.
- ADJUSTABLE TYPE is a structure that workers can adjust lenghth of the indicator post according to depth of the piping on the spot of burying valve.

DRAWING

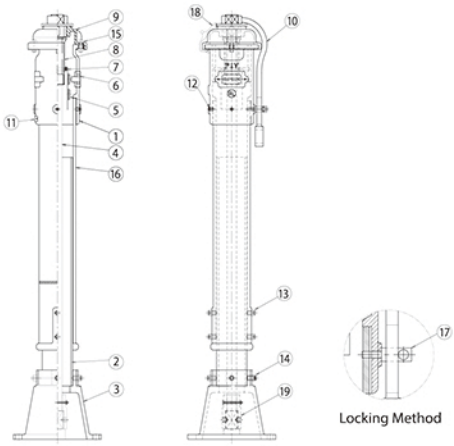

MATERIAL

PART NO.	PART NAME	Q'ty	MATERIALS (ASTM SPECIFICATION)
1	TOP SECTION	1	A126 CLASS B
2	LOWER BARREL	1	A53 GR A(4"-4OSCH)
3	BOTTPM SECTION	1	A126 CLASS B
4	OPERATING STEM	1	SQUARE BAR(A36)
5	OPEN/SHUT TARGET	2	ALUMINIUM
6	INDICATOR FLANGE	2	A351 CF8
7	TARGET CARRIER NUT	1	B62 or B584 C83600
8	OPERATION STEM NUT	-	A351 GR CF8
9	COVER	1	A126 CLASS B
10	LEVER	4	A126 CLASS B
11	NAME PLATE	1	A240 304
12	TOP SECTION BOLT	3	AISI 304
13	UPPER BARREL BOLT&NUT	4	AISI 304
14	BOTTOM SECTION BOLT&NUT	4	AISI 304
15	COVER BOLT&NUT	2	AISI 304
16	UPPER BARREL	1	A126 CLASS B
17	LOCKING BOLT	1	A36
18	SEALING MRTHOD	1	STAINLESS STEEL WIRE
19	COUPLING	1	A216 WCB

SPECIFICATION

SIZE	4"~24" (UL Listed)
OPERATION TYPE	LEVER
ABOVE GROUND	1000m
ADJUSTABLE RANGE	MAX. 500mm
BARREL MATERIAL	CAST IRON&STEEL PIPE

POST INDICATOR GATE VALVE

API 6D-0718 ISO 9001 UL

MODEL NO **PIV-1**

MODEL NO **PIV-2**
(RUBBER LINING TYPE)

PIV-1GT
GEAR TYPE
(LIMIT SWITCH)

PIV-1LT
LEVER TYPE
(TAMPER SWITCH)

FEATURES

- Post indicator Gate Valves is installed on the pipe lines of the ground-hydrants and it can be opened and closed for fire-hydrants maintenance.
- NRS Gate valve is a structure that stem does not move up and down when opening and closing the disc.
- Post indicator attached to NRS Gate valve on the fire fighting water pipe and it can control VALVE-OPENING and CLOSING from the ground via LEVER or GEAR TYPE.
- The status of valve opening and closing is checkable via transparent box on the indicator post. As a result, maintenance is much easier. ADJUSTABLE TYPE is a structure that workers can adjust length of the indicator post according to depth of the piping on the spot of burying valve.
- Tamper switch can be attached.

SOOSUNG Valve

14, Majung 5-ro, Seo-gu, Incheon, Korea
Tel +82-32-569-4230 Fax +82-32-569-4234

Email soosung@duocheck.co.kr
Website www.duocheck.co.kr

www.valve-korea.com

One Stop Solution Of Quality Valves

FORGED STEEL GATE,GLOBE & CHECK VALVE

BELLOW SEAL & CRYOGENICE SERVICE

SSV corporation

①VIEW OF MACHINING SHOP/1F
②VIEW OF ASSEMBLY-LINE/2F
③CNC LATHE
④MACHINING CENTER
⑤AUTO. INDEXING CHUCK
⑥VERTICAL FORGING PRESS
⑦SEATRING EXPANSION MACHINE
⑧LAPPING MACHINE

③

④

⑤

⑥

⑦

⑧

Machining & Testing

① HIGH PRESSURE HYDRO TESTER
② CRYOGENIC PROCESSING
③ CRYOGENIC TESTING
④ CRYOGENIC VALVE
⑤ HYDRO TESTING FOR CASTING VALVE
⑥ SPECTROMETER
⑦ U.T.M
⑧ COORDINATE MEASURING MACHINE
⑨ BRINELL HARDNESS TESTER

①

②

③

④

⑤

⑥

⑦

⑧

⑨

Product Information

1. TYPE:
- GATE, GLOBE, ANGLE, Y-TYPE GLOBE, GLOBE NEEDLE POINT, LONG BONNET, BELLOWS SEAL, CRYOGENIC SERVICE
- ACTUATOR(MOV, PNEUMATIC)
- CHECK VALVE(LIFT, SWING, BALL, TILTING, SPRING LOADED), GLOBE CHECK(SDNR)
- DSS VALVE FOR POWER PLANT, STRAINER
- BALL VALVE
- Y-STRAINER VALVE

2. SIZE: 3/8"~2"(21/2"~20" BY ORDER)

3. CLASS: API 800, 1500
ANSI 150, 300, 600, 900, 1500, 2500, 4500

4. PORT: REDUCED OR FULL

5. MATERIAL: ASTM A105/A182-F304, F316, A182-F304L, F316L, F5, F9, F11, F22, F51, F53, F91, F347/A350-LF2
ALLOY, MONEL, INCONEL, HASTELLOY

6. END CONNECTION:
SOCKET WELDING ACC. TO ANSI, JIS, KS, DIN
BUTT WELDING ACC TO ANSI
THREADED ACC. TO NPT, PT
FLANGED ACC. TO ANSI, BSS, JIS, KS, DIN

7. BONNET TYPE:
BOLTED BONNET, WELDED BONNET
PRESSURE SEAL BONNET

8. OTHER FEATURE:
OUTSIDE SCREW AND YOKE

Figure Number Abbreviations

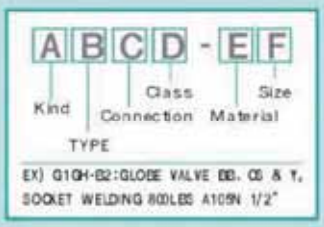

A-KIND
- G : GLOBE
- W : GATE
- LC : LIFT CHECK
- SC : SWING CHECK
- BC : BALL CHECK
- BL : BELLOWS
- TC : STOP CHECK
- AG : ANGLE
- N : NEEDLE
- S : STRAINER
- BA : BALL

B-TYPE
- ① BB, OS & Y
- ② WB, OS & Y
- ③ BC, (BOLTED COVER)
- ④ WC,(WELDED COVER)
- ⑤ PS (PRESSURE SEAL)
- ⑥ Y-TYPE

C-CONNECTION
- G. SOCKET WELDING
- SCR. THREADED
- BW. BUTT WELDING
- RF. RAISED FACE FLANGE
- FF. FLAT RACE FLANGE
- RJ. RING JOINT FLANGE

D-CLASS
- A. ANSI 150LBS
- B. ANSI 300LBS
- C. ANSI 600LBS
- D. ANSI 900LBS
- E. ANSI 1500LBS
- F. ANSI 2500LBS
- G. ANSI 4500LBS
- H. API 800LBS
- I. API 1500LBS

E-MATERIAL
- A. ASTM A105
- B. ASTM A105N
- C. ASTM A182-F5
- D. ASTM A182-F9
- E. ASTM A182-F11
- F. ASTM A182-F22
- G. ASTM A182-F304
- H. ASTM A182-F316
- I. ASTM A182-F304L
- J. ASTM A182-F316L
- K. ASTM A182-F321
- L. ASTM A350-LF2

F-SIZE
- ① 3/8"
- ② 1/2"
- ③ 3/4"
- ④ 1"
- ⑤ 1 1/4"
- ⑥ 1 1/2"
- ⑦ 2"
- ⑧ 2 1/2"~20"

Abbreviations

- **ANSI**:American National Standards Institute Inc.
- **API**:American Petroleum Institute
- **ASB**:Asbestos
- **ASTM**:American Society for Testing and Materials
- **BB**:Bolted Bonnet
- **BC**:Bolted Cover
- **BW**:Butt Welding
- **CWP**:Cold Working Pressure
- **EB**:Extended Bonnet
- **FF**:Flat Face
- **FLGD**:Flanged
- **HF**:Hard Faced
- **INTSS**:Integral Seat Stellite Wild Face
- **ISS**:Inside Screw and Stem
- **JIS**:Japanese Industrial Standard
- **JPI**:Japan Petroleum Institute
- **LB**:Long Bonnet
- **NPT**:National Pipe Taper Thread(Pipe Thread):ANSI
- **OS&Y**:Outside Screw and Yoke
- **PT**:Pipe Taper Thread(Pipe Thread):JIS
- **RF**:Raised Face
- **RS**:Rising Stem
- **RTJ**:Ring Type Joint
- **SB**:Screwed Bonnet
- **SCH**:Schedule
- **SCRD**:Screwed
- **SDNR**:Stem Down Non Return
- **SH**:Surface Hardening
- **STD**:Standard
- **STL**:Stellite
- **SW**:Socket Welding
- **WB**:Welded Bonnet
- **WC**:Welded Cover
- **PS**:Pressure seal

PRODUCT VALVE LIST

DESCRIBED VALVES ARE CURRENTLY PRODUCED BY DONG KANG METAL CO.,LTD.

1. GATE VALVE
2. GLOBE VALVE
3. LIFT CHECK VALVE
4. SWING CHECK VALVE
5. NEEDLE VALVE
6. GLOBE CHECK VALVE
7. PISTON CHECK VALVE (W/SPRING)
8. CRYOGENIC GATE VALVE
9. CRYOGENIC GLOBE VALVE
10. CRYOGENIC SWING CHECK VALVE (CASTING)
11. BELLOWS GATE VALVE
12. BELLOWS GLOBE VALVE
13. BELLOWS GLOBE VALVE (CASTING)
14. 3-PIESE BALL VALVE
15. BALL CHECK VALVE (W/SPRING)
16. Y-STRAINER
17. Y-STRAINER (CASTING)
18. Y-GLOBE VALVE

GATE VALVE

GLOBE VALVE

PISTON CHECK VALVE (W/SPRING)

CRYOGENIC GATE VALVE

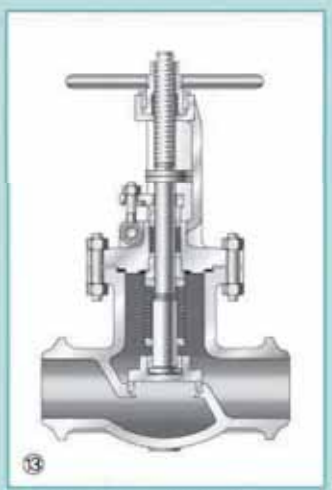

BELLOWS GLOBE VALVE (CASTING)

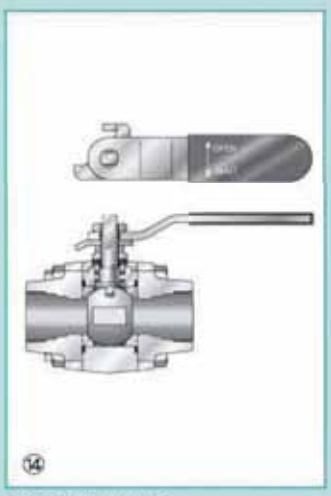

3-PIESE BALL VALVE

LIFT CHECK VALVE

SWING CHECK VALVE

NEEDLE VALVE

GLOBE CHECK VALVE

CRYOGENIC GLOBEVALVE

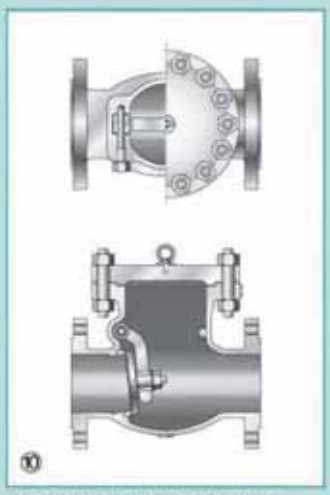

CRYOGENIC SWING CHECK VALVE (CASTING)

BELLOWS GATE VALVE

BELLOWS GLOBE VALVE

BALL CHECK VALVE (W/SPRING)

Y-STRAINER

Y-STRAINER (CASTING)

Y-GLOBE VALVE

PRODUCT VALVE LIST

DESCRIBED VALVES ARE CURRENTLY PRODUCED BY DONG KANG METAL CO.,LTD.

19. PNEUMATICALLY OPERATED GLOBE VALVE
20. MOTOR OPERATED VALVE (M.O.V)/ GLOBE
21. HEATING JACKET VALVE
22. ANGLE VALVE
23. PRESSURE SEAL BONNET(GLOBE)
24. CHECK VALVE PRESSURE SEAL BONNET

PNEUMATICALLY OPERATED GLOBE VALVE

MOTOR OPERATED VALVE (M.O.V)/GLOBE

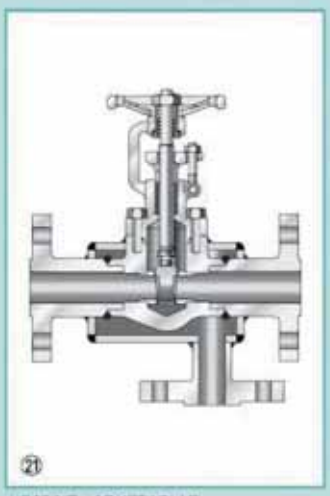

HEATING JACKET VALVE

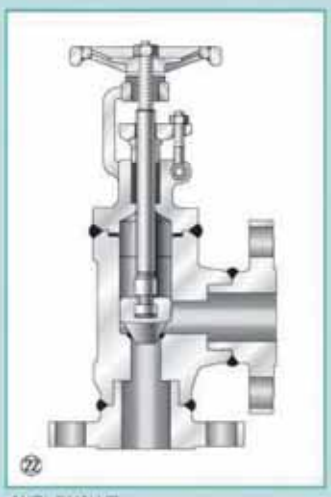

ANGLE VALVE

PRESSURE SEAL BONNET(GLOBE)

CHECK VALVE PRESSURE SEAL BONNET

www.valvekorea.co.kr

FORGED STEEL VALVES

- Gate Valves
- Globe Valves
- Lift Check Valves
- Swing Check Valves

GATE VALVES

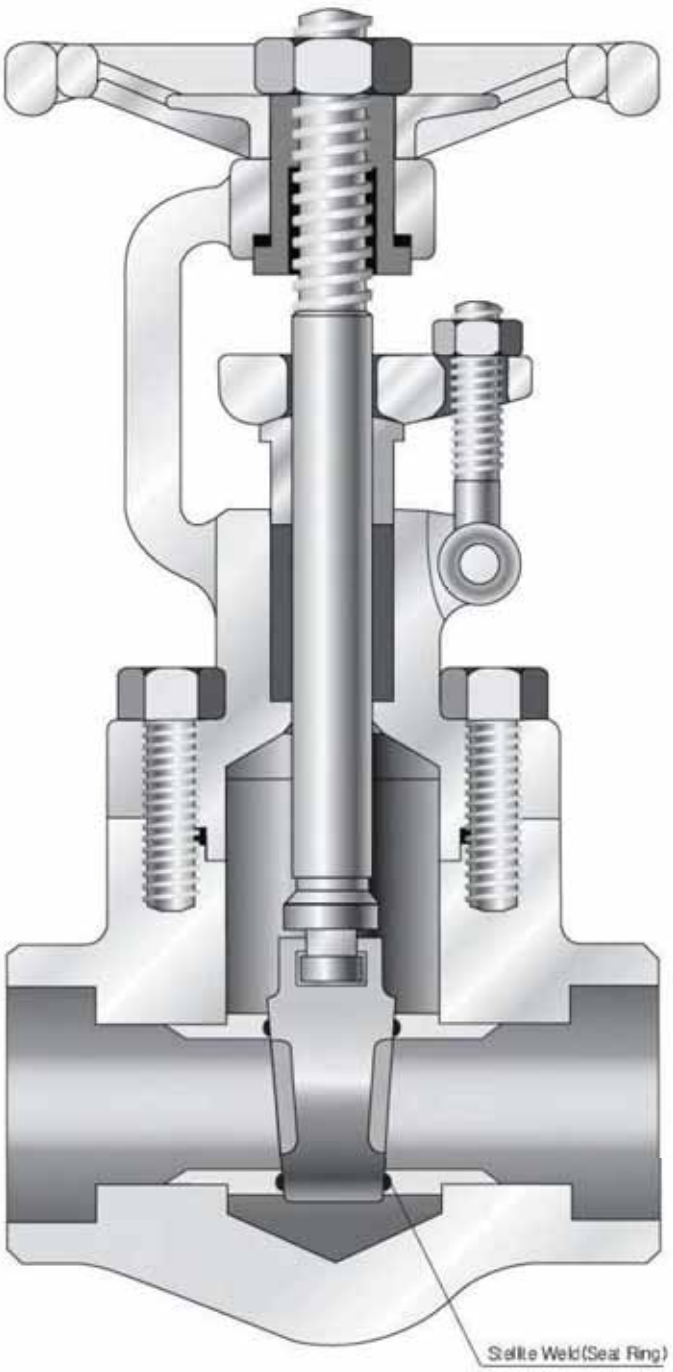

DESCRIPTION

serves as efficient stop valves with flow in either direction. They are commonly used where a minimum of pressure drop is important because they offer practically no resistance to flow when fully open. Throttling is not conducive to accurate and consistent flow control. Also the valves may be damaged by the high velocity across the seats. They function best fully open or fully closed.

CLASS

API 800, 1500
ANSI 150, 300, 600, 900, 1500, 2500

SIZE

3/8", 1/2", 3/4", 1", 1 1/4", 1 1/2", 2"

MATERIAL

ASTM A105, A182-F5, A182-F9, A182-F11, A182-F22, A182-F304, A182-F316, A182-F304L, A182-F316L, A182-F321, A182-F347, A182-F51, A182-F91, A350-LF2

Other Materials also Available on Application

END CONNECTION

SOCKET WELDING, THREADED
BUTT WELDING, FLANGED

FEATURE

BOLTED BONNET OR WELDED BONNET
OUTSIDE SCREW & YOKE
SOLID WEDGE DISC
RENEWABLE SEAT

GATE VALVES

FORGED STEEL GATE VALVES
BOLTED BONNET OS &Y

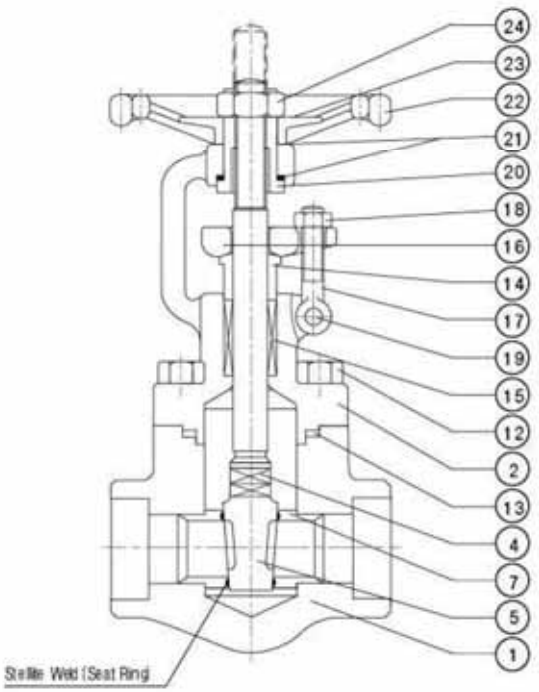

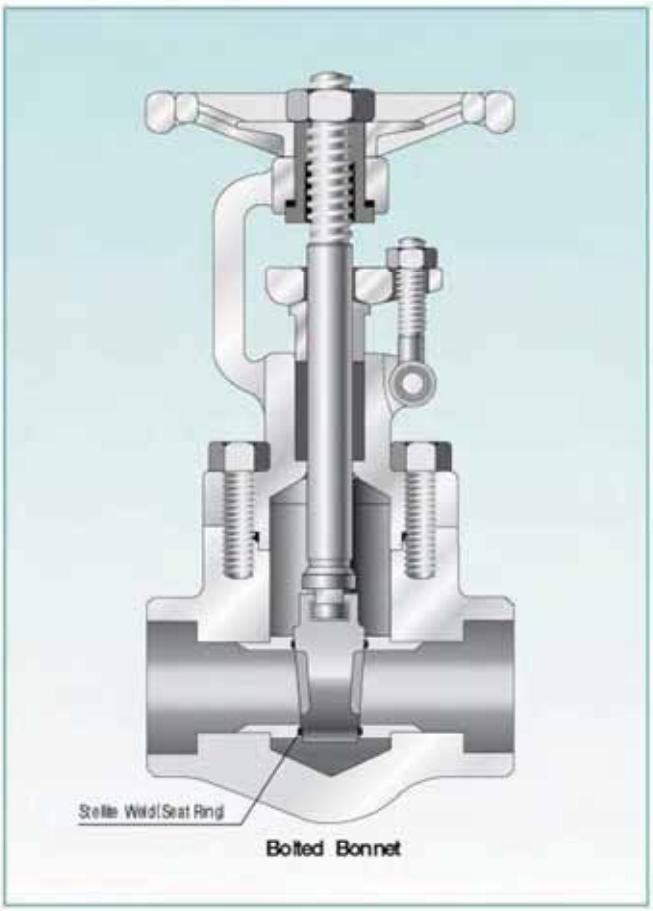

PARTS NOMENCLATURE

Part No.	Part Name	Q'ty	ASTM Specifications(Specs.-Grades/Types)									
			A105	A182				A182				
				F304	F304L	F316	F316L	F1	F5	F9	F11	F22
1	Body	1	A105 (1)	A182-F304	A182-F304L	A182-F316	A182-F316L	A182-F1	A182-F5	A182-F9	A182-F11	A182-F22
2	Bonnet	1	A105 (1)	A182-F304	A182-F304L	A182-F316	A182-F316L	A182-F1	A182-F5	A182-F9	A182-F11	A182-F22
4	Stem	1	A276-410	A276-304	A276-316			A276-410				
5	Disc	1	A217-CA15	A351-CF8	A351-CF8M			A217-CA15				
7	Seat Ring	2	A276-410+STL	A276-304+STL'	A276-316+STL'			A276-410+STL'				
12	Bonnet Bolt	4	A193-B7	A193-B8				A193-B7				
13	Gasket	1	SS304+Graphite			SS316+Graphite		SS304+Graphite				
14	Gland	1	A276-304									
15	Gland Packing	1set	Graphite									
16	Gland Flange	1	A105	A182-F304				A105				
17	Gland Bolt	2	A276-304									
18	Gland Bolt Nut	2	A194-2H	A194-8				A194-2H				
19	Gland Bolt Pin	2	A276-304									
20	Sleeve	1	A276-410									
21	Sleeve Washer	2	A276-410									
22	Handwheel	1	A197									
23	Nameplate	1	Aluminum									
24	Handwheel Nut	1	A108-1020									

(1) A105 also Available with 0.25% Maximum Carbon.
Other Materials also Available on Application.

GATE VALVES CLASS 600&800

FORGED STEEL GATE VALVES
BOLTED BONNET OS & Y

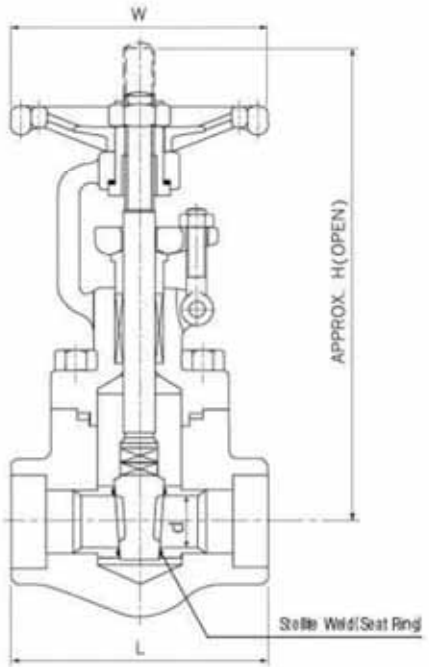

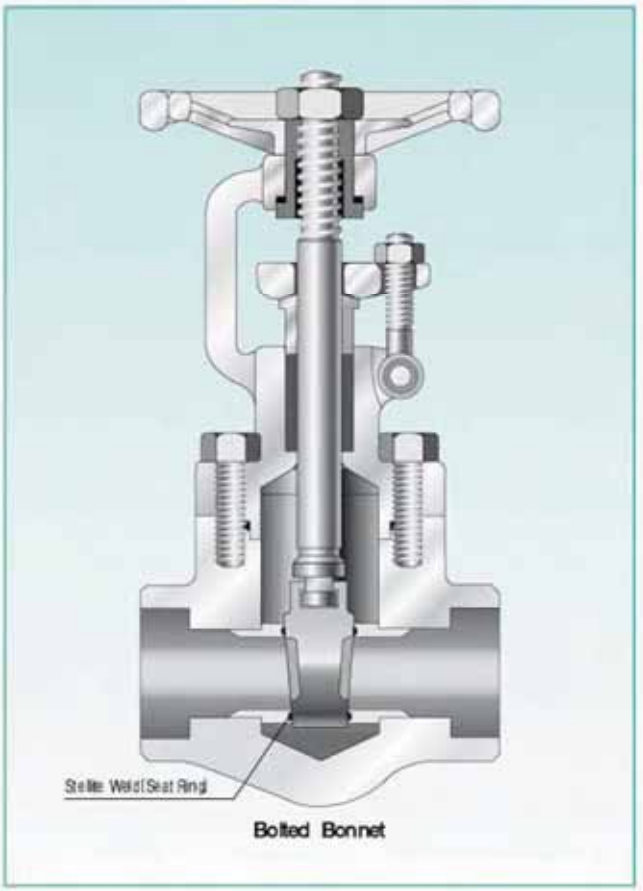

DIMENSIONS & WEIGHTS

CLASS	Port	Valve Size		Center to Top, Open		End to End		Handwheel Diameter		Port Diameter		Approx. Weight	
				H		L		W		d			
		DN	in	mm	in	mm	in	mm	in	mm	in	kg	lb
600 & 800	Reduced	10	3/8	139	5.47	73	2.87	95	3.74	8	0.31	1.5	3.3
		15	1/2	139	5.47	73	2.87	95	3.74	10	0.39	1.4	3.1
		20	3/4	151	5.95	87	3.43	95	3.74	13	0.51	1.9	4.2
		25	1	181	7.13	96	3.77	105	4.13	19	0.75	2.7	6.0
		32	1 1/4	213	8.39	123	4.84	135	5.32	25	0.98	4.8	10.6
		40	1 1/2	226	8.90	141	5.55	135	5.32	30	1.18	5.4	11.9
		50	2	260	10.24	163	6.42	160	6.30	37	1.50	8.9	19.6
	Full	10	3/8	139	5.47	73	2.87	75	2.95	10	0.39	1.4	3.1
		15	1/2	151	5.95	87	3.43	95	3.74	13	0.51	1.9	4.2
		20	3/4	181	7.13	96	3.77	105	4.13	19	0.75	2.7	6.0
		25	1	213	8.37	123	4.84	135	5.32	25	0.98	4.8	10.6
		32	1 1/4	226	8.90	141	5.55	135	5.32	30	1.18	5.4	11.9
		40	1 1/2	260	10.24	163	6.42	160	6.30	37	1.50	8.9	19.6
		50	2	388	15.3	172	6.77	180	7.08	45	1.77	25.4	56.0

GATE VALVES CLASS 900&1500

FORGED STEEL GATE VALVES
WELDED BONNET OS &Y

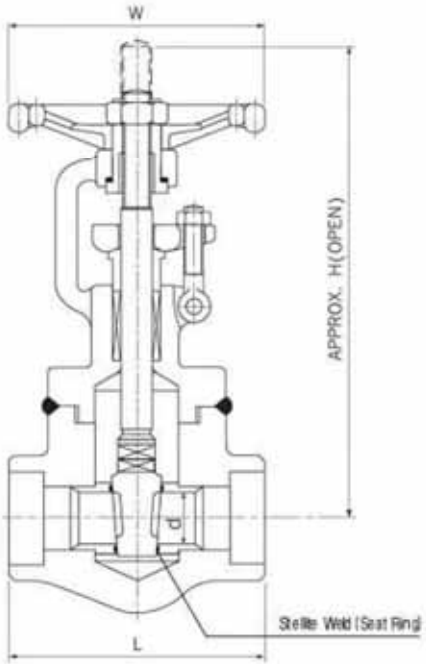

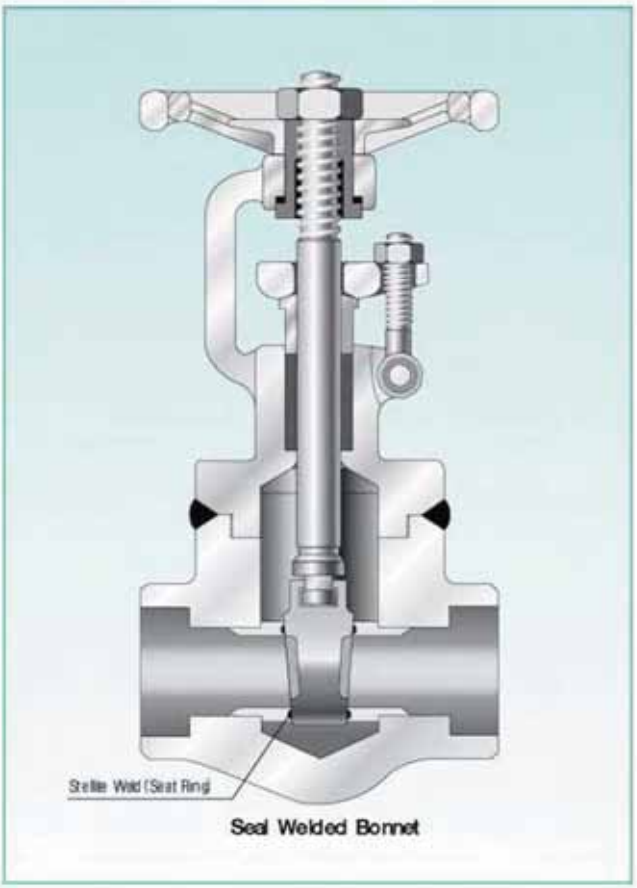

DIMENSIONS & WEIGHTS

CLASS	Port	Valve Size		Center to Top, Open		End to End		Handwheel Diameter		Port Diameter		Approx. Weight	
				H		L		W		d			
		DN	in	mm	in	mm	in	mm	in	mm	in	kg	lb
900 & 1500	Reduced	10	3/8	151	5.51	87	3.43	95	3.74	8	0.31	1.9	4.2
		15	1/2	151	5.51	87	3.43	95	3.74	10	0.51	1.9	4.2
		20	3/4	181	7.13	96	3.77	105	4.13	13	0.51	2.3	5.1
		25	1	213	8.39	123	4.84	135	5.32	19	0.75	4.8	10.6
		32	1 1/4	226	8.90	141	5.55	135	5.32	25	1.00	5.4	11.9
		40	1 1/2	260	10.24	163	6.42	160	6.30	30	1.19	8.9	19.6
		50	2	365	18.0	172	6.77	180	7.08	37	1.57	20.4	44.9
	Full	10	3/8	181	7.28	96	3.77	95	3.74	13	0.51	2.3	5.1
		15	1/2	181	7.13	96	3.77	105	4.13	13	0.51	2.3	5.1
		20	3/4	213	8.27	123	4.84	135	5.32	19	0.75	4.8	10.6
		25	1	226	9.41	141	5.55	135	5.32	25	1.00	5.4	11.9
		32	1 1/4	260	10.98	163	6.42	160	6.30	30	1.19	8.9	19.6
		40	1 1/2	284	12.6	172	6.77	180	7.08	37	1.44	15.2	34.5
		50	2	388	15.3	220	8.66	230	9.06	45	1.77	25.4	56.0

GATE VALVES CLASS 2500

FORGED STEEL GATE VALVES
WELDED BONNET OS & Y

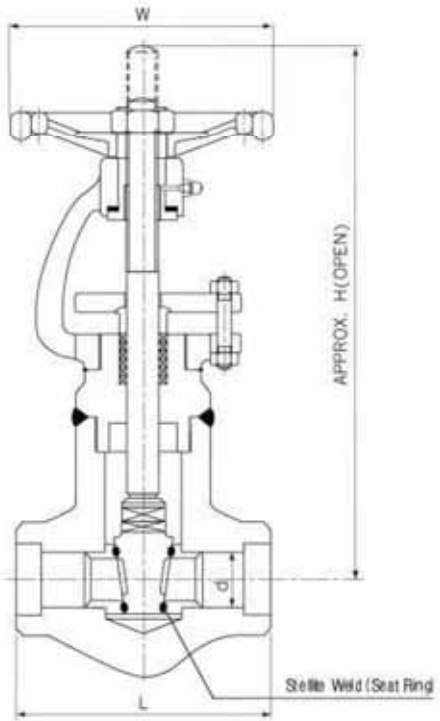

DIMENSIONS & WEIGHTS

CLASS	Port	Valve Size		Center to Top, Open		End to End		Handwheelt Diameter		Port Diameter		Approx. Weight	
				H		L		W		d			
		DN	in	mm	in	mm	in	mm	in	mm	in	kg	lb
2500	Full	15	1/2	205	8.07	96	3.77	160	6.29	10	0.39	2.9	6.39
		20	3/4	230	9.05	123	4.84	160	6.29	13	0.51	4.8	10.5
		25	1	275	10.82	141	5.55	200	7.87	18	0.70	5.4	11.9
		32	1 1/4	285	11.22	163	6.41	250	9.84	24	0.94	8.9	19.6
		40	1 1/2	315	12.40	172	6.77	250	9.84	30	1.10	26.8	59.1
		50	2	388	15.3	220	8.66	350	13.8	35	1.37	33.4	73.6

GLOBE VALVES

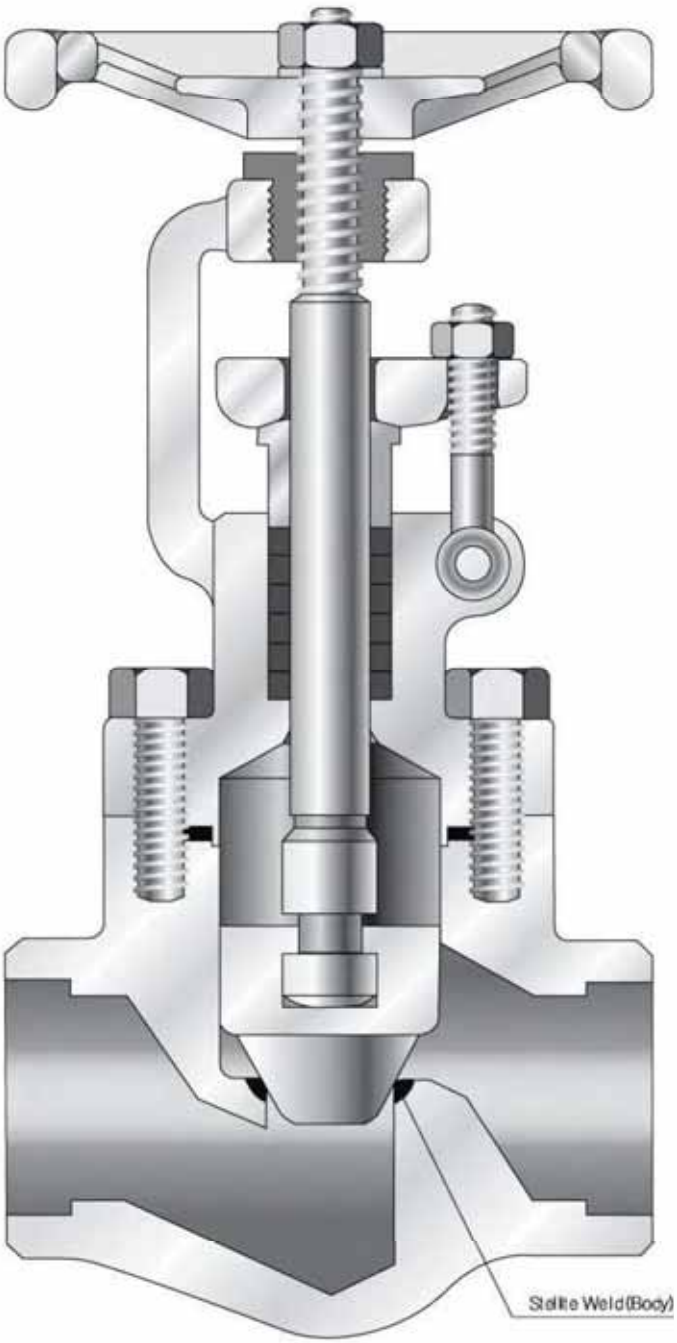

DESCRIPTION

are ideal for throttling service. Their flow characteristics permit accurate and repeatable flow control. However, caution must be exercised to avoid extremely close throttling when pressure drop exceeds 20%. This creates excessive noise, vibration, and possibly damage to valves and piping. When these conditions are anticipated, consult Dong-Kang for recommendations.

CLASS

API 800, 1500
ANSI 150, 300, 600, 900, 2500, 4500

SIZE

3/8", 1/2", 3/4", 1", 1 1/4", 1 1/2", 2"

MATERIAL

ASTM A105, A182-F5, A182-F9, A182-F11, A182-F22, A182-F304, A182-F316, A182-F304L, A182-F316L, A182-F321, A182-F347, A182-F51, A182-F91, A350-LF2

Other Materials also Available on Application

END CONNECTION

SOCKET WELDING, THREADED
BUTT WELDING, FLANGED

FEATURE

BOLTED BONNET OR WELDED BONNET
OUTSIDE SCREW & YOKE
PLUG DISC
INTEGRAL SEAT

GLOBE VALVES

FORGED STEEL GLOBE VALVES
BOLTED BONNET OS &Y

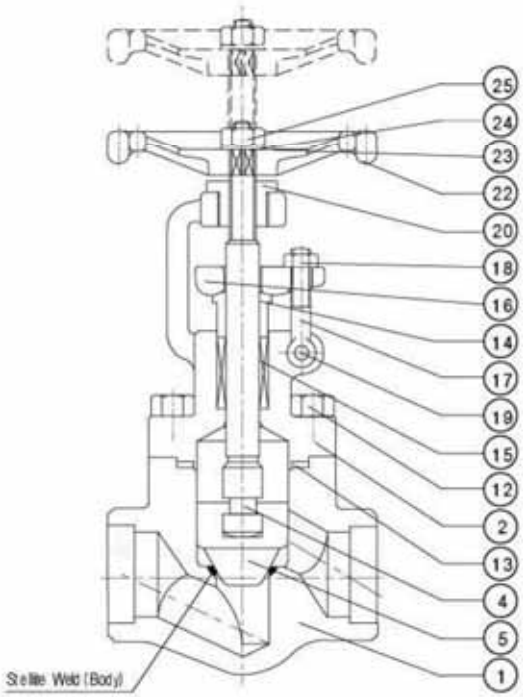

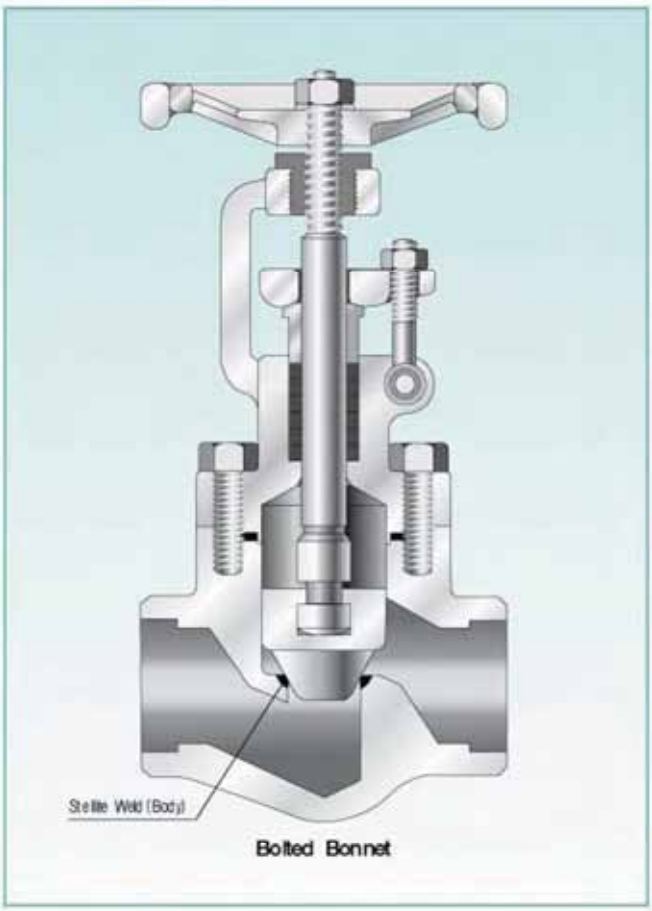

PARTS NOMENCLATURE

Part No.	Part Name	Q'ty	ASTM Specifications(Specs.-Grades/Types)									
			A105	A182				A182				
				F304	F304L	F316	F316L	F1	F5	F9	F11	F22
1	Body	1	A105 (1)	A182-F304	A182-F304L	A182-F316	A182-F316L	A182-F1	A182-F5	A182-F9	A182-F11	A182-F22
2	Bonnet	1	A105 (1)	A182-F304	A182-F304L	A182-F316	A182-F316L	A182-F1	A182-F5	A182-F9	A182-F11	A182-F22
4	Stem	1	A276-410	A276-304	A276-316			A276-410				
5	Disc	1	A217-CA15	A351-CF8	A351-CF8M			A217-CA15				
12	Bonnet Bolt	4	A193-B7	A193-B8				A193-B7				
13	Gasket	1	SS304+Graphite			SS316+Graphite		SS304+Graphite				
14	Gland	1	A276-304									
15	Gland Packing	1set	Graphite									
16	Gland Flange	1	A105	A182-F304				A105				
17	Gland Bolt	2	A276-304									
18	Gland Bolt Nut	2	A194-2H	A194-8				A194-2H				
19	Gland Bolt Pin	2	A276-304									
20	Sleeve	1	A276-410									
22	Handwheel	1	A197									
23	Nameplate	1	Aluminum									
24	Handwheel Washor	1	A108-1020									
25	Handwheel Net	1	A194 -2H									

(1) A105 also Available with 0.25% Maximum Carbon.
Other Materials also Available on Application.

GLOBE VALVES CLASS 600&800

FORGED STEEL GLOBE VALVES
WELDED BONNET OS &Y

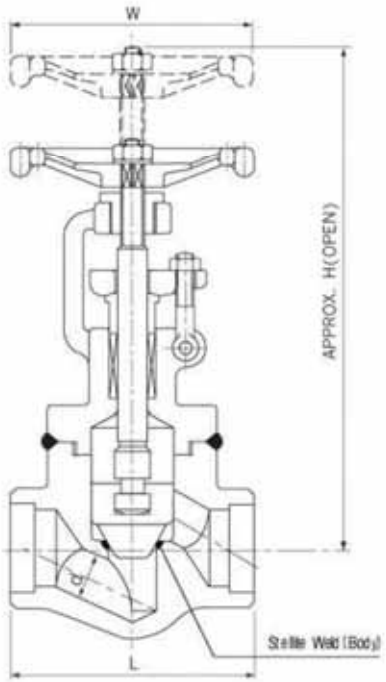

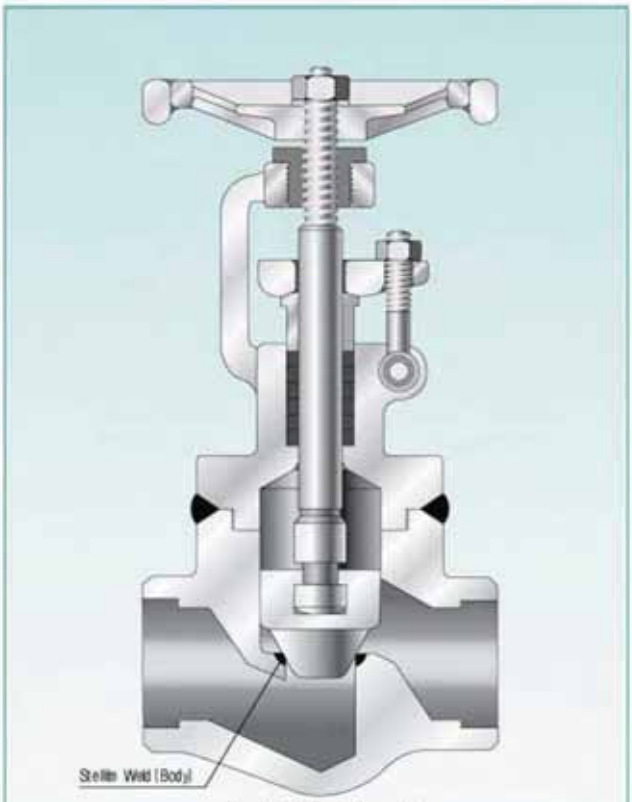

Seal Welded Bonnet

DIMENSIONS & WEIGHTS

CLASS	Port	Valve Size		Center to Top, Open		End to End		Handwheel Diameter		Port Diameter		Approx. Weight	
				H		L		W		d			
		DN	in	mm	in	mm	in	mm	in	mm	in	kg	lb
600 & 800	Reduced	10	3/8	134	5.28	73	2.87	75	2.95	8	0.31	1.5	3.3
		15	1/2	134	5.28	73	2.87	75	2.95	10	0.39	1.4	3.1
		20	3/4	148	5.82	87	3.42	95	3.74	13	0.51	1.9	4.2
		25	1	180	7.09	96	3.77	105	4.13	19	0.75	2.7	6.0
		32	1 1/4	210	8.27	123	4.84	135	5.31	25	0.98	4.9	10.8
		40	1 1/2	223	8.78	141	5.55	135	5.31	30	1.43	5.8	12.8
		50	2	255	10.04	163	6.41	160	6.30	37	1.46	9.3	20.5
	Full	10	3/8	134	5.28	73	2.87	75	2.95	10	0.39	1.4	3.1
		15	1/2	148	5.82	87	3.42	95	3.74	12	0.48	1.9	4.2
		20	3/4	180	7.09	96	3.77	105	4.13	18	0.70	2.7	6.0
		25	1	210	8.29	123	4.84	135	5.31	22	0.87	4.9	10.8
		32	1 1/4	223	8.78	141	5.55	135	5.31	28	1.10	5.8	12.8
		40	1 1/2	255	10.04	163	6.41	160	6.30	33	1.30	9.3	20.5
		50	2	382	15.04	172	6.77	180	7.08	45	1.77	11.2	24.7

GLOBE VALVES CLASS 900&1500

FORGED STEEL GLOBE VALVES
BOLTED BONNET OS &Y

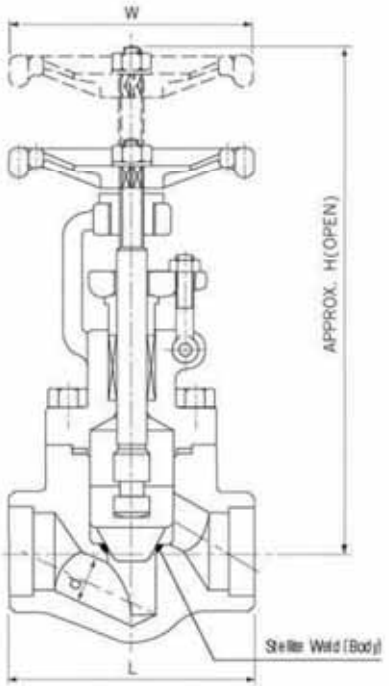

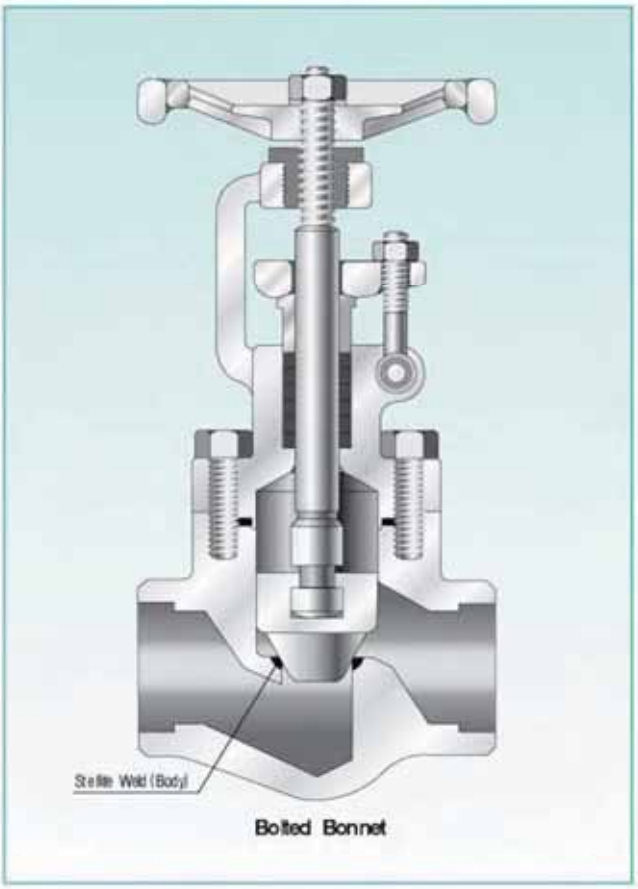

DIMENSIONS & WEIGHTS

CLASS	Port	Valve Size		Center to Top, Open		End to End		Handwheel Diameter		Port Diameter		Approx. Weight	
				H		L		W		d			
		DN	in	mm	in	mm	in	mm	in	mm	in	kg	lb
900 & 1500	Reduced	10	3/8	148	5.83	87	3.42	95	3.74	8	0.31	1.9	4.2
		15	1/2	148	5.83	87	3.42	95	3.74	10	0.39	1.9	4.2
		20	3/4	180	7.09	96	3.77	95	3.74	13	0.51	2.7	6
		25	1	210	8.27	123	4.84	135	5.31	19	0.68	4.9	10.8
		32	1 1/4	223	8.78	141	5.55	135	5.31	25	0.94	5.8	12.8
		40	1 1/2	255	10.04	163	6.41	160	6.29	30	1.22	9.3	20.5
		50	2	364	13.11	172	6.77	180	7.08	37	1.46	20.4	44.9
	Full	10	3/8	180	7.09	96	3.77	95	3.74	10	0.39	2.7	6
		15	1/2	180	7.09	96	3.77	95	3.74	13	0.51	2.7	6
		20	3/4	210	8.27	123	4.84	135	5.31	19	0.68	4.9	10.8
		25	1	223	8.78	141	5.55	135	5.31	25	0.94	5.8	12.8
		32	1 1/4	255	10.04	163	6.41	160	6.29	30	1.22	9.3	20.5
		40	1 1/2	364	14.3	172	6.77	180	7.08	37	1.48	20.5	44.9
		50	2	388	15.3	220	8.66	250	9.84	45	1.77	25.8	58.9

GLOBE VALVES CLASS 2500&4500

FORGED STEEL GLOBE VALVES
WELDED BONNET OS & Y

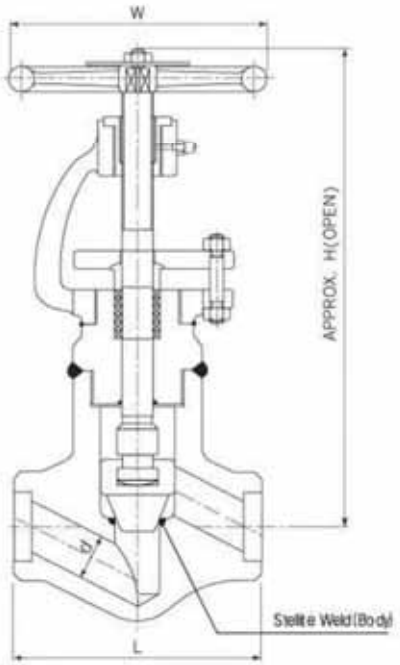

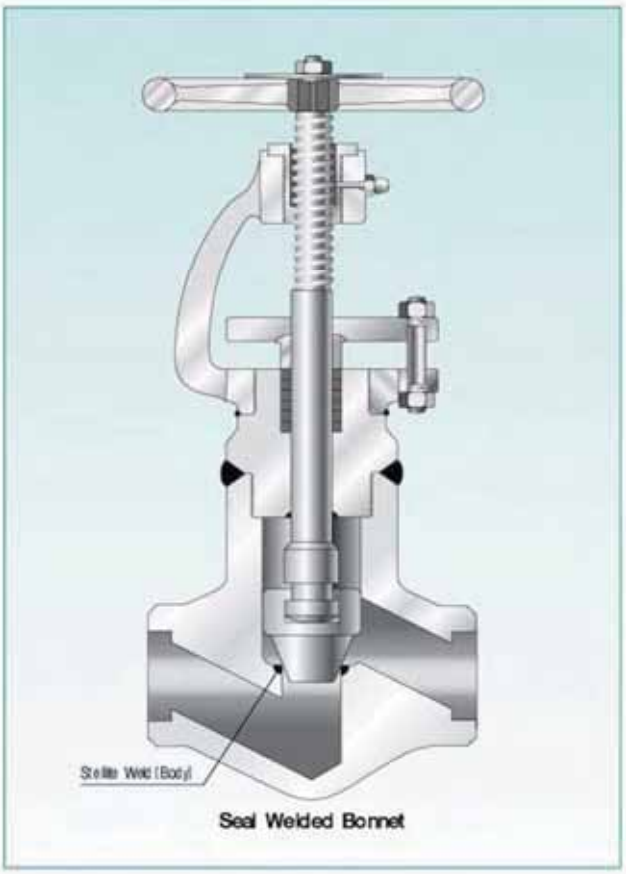

DIMENSIONS & WEIGHTS

CLASS	Port	Valve Size		Center to Top, Open		End to End		Handwheel Diameter		Port Diameter		Approx. Weight	
				H		L		W		d			
		DN	in	mm	in	mm	in	mm	in	mm	in	kg	lb
2500	Full	15	1/2	180	7.08	96	3.77	160	6.29	10	0.39	6.75	14.88
		20	3/4	210	8.26	123	4.84	160	6.29	13	0.51	8.9	19.62
		25	1	223	8.77	141	5.55	200	7.87	18	0.70	16.5	36.37
		32	1 1/4	255	10.0	163	6.41	250	9.84	24	0.94	18.4	40.56
		40	1 1/2	382	15.0	172	6.77	250	9.84	28	1.10	26.4	58.2
		50	2	458	18.0	220	8.66	350	13.8	35	1.38	33.5	73.9
4500	Full	15	1/2	324	12.8	163	6.41	160	6.29	8	0.31	18.4	40.56
		20	3/4	324	12.8	163	6.41	160	6.29	12	0.47	18.3	40.34
		25	1	324	12.8	163	6.41	200	7.87	14	0.55	18.3	40.34
		32	1 1/4	382	15.0	172	6.77	250	9.84	18	0.71	26.4	58.4
		40	1 1/2	382	15.0	172	6.77	250	9.84	22	0.87	26.4	58.2
		50	2	458	18.0	220	8.66	350	13.8	25	0.98	33.5	73.9

CHECK VALVES

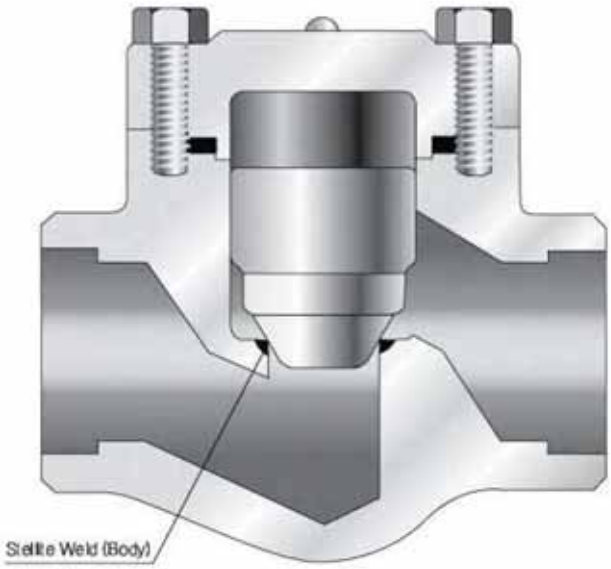

LIFT CHECK

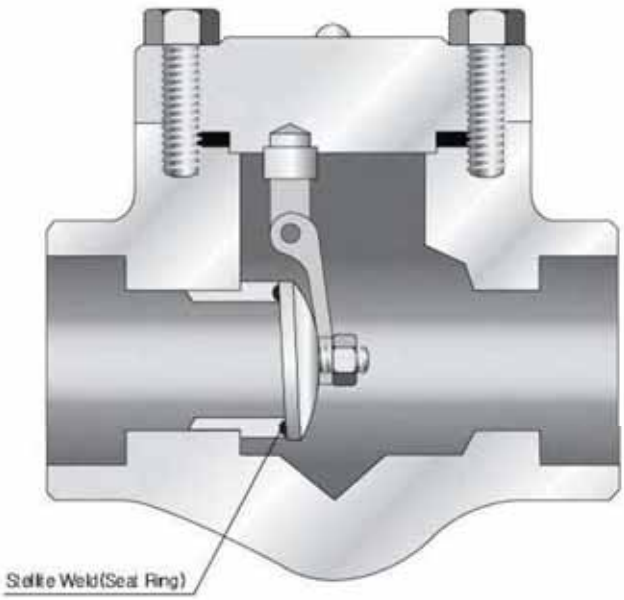

SWING CHECK

LIFT CHECK VALVES

DESCRIPTION

have an advantage over most other types of check valves in that they need only a relatively short lift to obtain full valve opening. The lift check valve uses a free-moving closure element that is placed above the seat. It prevents backflow and maintains pressure. The lift check valve is recommended to install in horizontal piping lines because the disc is pushed up by the flow until the flow reverses when gravity and down stream pressure close the closure element against the seat.

CLASS

API 800, 1500
ANSI 150, 300, 600, 900, 1500, 2500, 4500

SIZE

3/8", 1/2", 3/4", 1", 1 1/4", 1 1/2", 2"

MATERIAL

ASTM A105, A182-F5, A182-F9, A182-F11, A182-F22, A182-F304, A182-F316, A182-F304L, A182-F316L, A350-LF2

END CONNECTION

SOCKET WELDING, THREADED
BUTT WELDING, FLANGED

FEATURE

BOLTED COVER OR WELDED COVER
INTEGRAL SEAT

SWING CHECK VALVES

DESCRIPTION

prevent reversal of flow through pipe lines. The swing check valve uses a hinged door to open during flow and to close against a pressure reversal. Most dong-kang swing check valves can be installed in horizontal or vertical upward flow piping. They offer low resistance to flow and are particularly suited to low velocity service.

CLASS

API 800, 1500
ANSI 150, 300, 600, 900, 1500

SIZE

3/8", 1/2", 3/4", 1", 1 1/4", 1 1/2", 2"

MATERIAL

ASTM A105, A182-F5, A182-F9, A182-F11, A182-F22, A182-F304, A182-F316, A182-F304L, A182-F316L, A182-F321, A182-F347, A182-F51, A182-F91, A350-LF2

Other Materials also Available on Application

END CONNECTION

SOCKET WELDING, THREADED
BUTT WELDING, FLANGED

FEATURE

BOLTED COVER OR WELDED COVER
RENEWABLE SEAT

CHECK VALVES

FORGED STEEL LIFT CHECK VALVES
BOLTED COVER

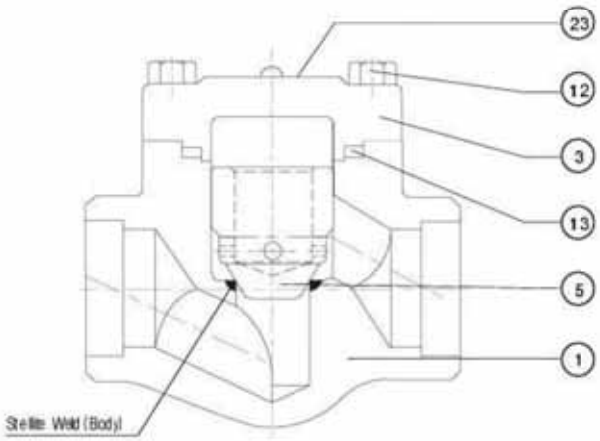

LIFT CHECK

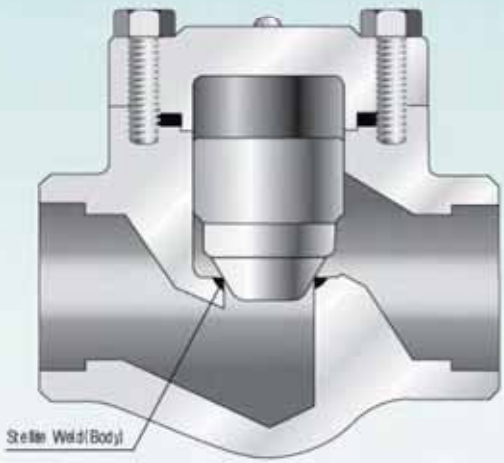

LIFT CHECK

PARTS NOMENCLATURE

No.	Part Name	Q'ty	MATERIAL - ASTM				
			A105	F304	F304L	F316	F316L
1	Body	1	A105 (1)	A182-F304	A182-F304L	A182-F316	A182-F316L
3	Cover	1	A105 (1)	A182-F304	A182-F304L	A182-F316	A182-F316L
5	Disc	1	A217-CA15	A351-CF8	A351-CF8M		
12	Cover Bolt	4	A193-B7	A193-B8			
13	Gasket	1	SS304+Graphite			SS316+Graphite	
23	Nameplate	1	Aluminum				

(1) A105 also Available with 0.25% Maximum Carbon.
Other Materials also Available on Application.

CHECK VALVES CLASS 800&1500

FORGED STEEL LIFT CHECK VALVES
BOLTED COVER

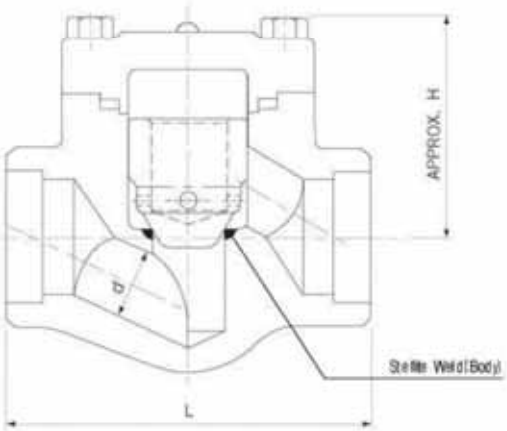

LIFT CHECK

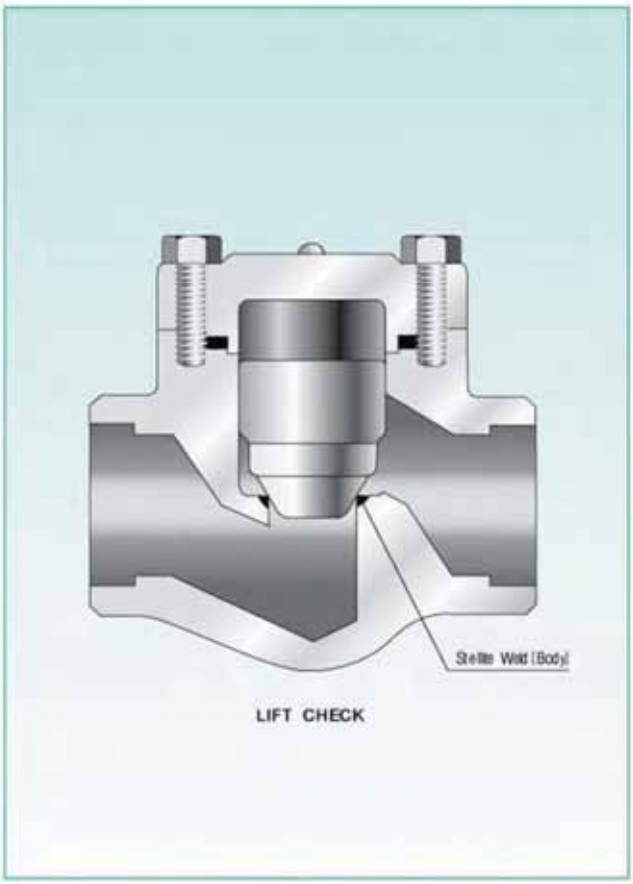

LIFT CHECK

DIMENSIONS & WEIGHTS

CLASS	Port	Valve Size		Center to Top, Open		End to End		Port Diameter		Approx. Weight	
				H		L		d			
		DN	in	mm	in	mm	in	mm	in	kg	lb
800	Reduced	10	3/8	51	2.00	73	2.87	8	0.31	1.3	2.9
		15	1/2	51	2.00	73	2.87	10	0.39	1.2	2.6
		20	3/4	55	2.17	87	3.42	13	0.51	1.3	2.9
		25	1	65	2.56	96	3.77	19	0.75	2.1	4.6
		32	1 1/4	76	2.99	123	4.84	25	0.98	4.0	8.8
		40	1 1/2	84	3.31	141	5.55	30	1.18	4.7	10.4
		50	2	101	3.98	163	6.41	37	1.46	7.1	15.6
	Full	10	3/8	51	2.00	73	2.87	10	0.39	1.3	2.9
		15	1/2	55	2.17	87	3.42	13	0.51	1.3	2.9
		20	3/4	65	2.56	96	3.77	19	0.75	2.1	4.6
		25	1	76	2.99	123	4.84	25	0.98	4.0	8.8
		32	1 1/4	84	3.31	141	5.55	30	1.18	4.7	10.4
		40	1 1/2	101	3.98	163	6.41	37	1.46	7.1	15.6
		50	2	116	4.57	172	6.77	45	1.77	10.7	23.5
1500	Reduced	10	3/8	55	2.17	87	3.42	8	0.31	1.2	2.6
		15	1/2	55	2.17	87	3.42	10	0.39	1.2	2.6
		20	3/4	65	2.56	96	3.77	13	0.51	2.1	4.6
		25	1	76	2.99	123	4.84	19	0.75	4.0	8.8
		32	1 1/4	84	3.31	141	5.55	25	0.98	4.7	10.4
		40	1 1/2	101	3.98	163	6.41	30	1.18	7.1	15.6
		50	2	116	4.57	172	6.77	37	1.46	10.5	23.1
	Full	10	3/8	65	2.56	96	3.77	10	0.39	3.1	4.6
		15	1/2	65	2.56	96	3.77	13	0.51	2.1	4.6
		20	3/4	76	2.99	123	4.84	19	0.75	4.0	8.8
		25	1	84	3.31	141	5.55	25	0.98	4.7	10.4
		32	1 1/4	101	3.98	163	6.41	30	1.18	7.1	15.6
		40	1 1/2	116	4.57	172	6.77	37	1.46	10.5	23.1
		50	2	136	5.35	220	8.66	44	1.73	12.5	27.5

CHECK VALVES CLASS 2500&4500

FORGED STEEL LIFT CHECK VALVES
WELDED COVER

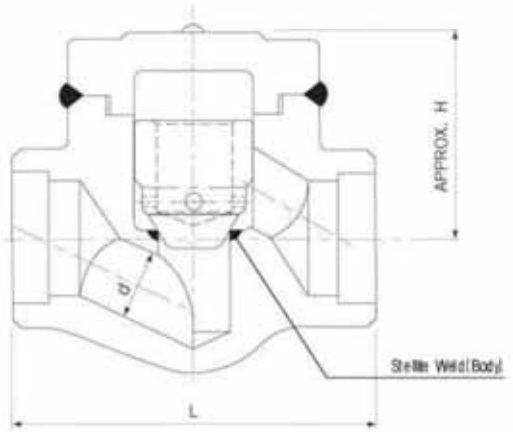

LIFT CHECK

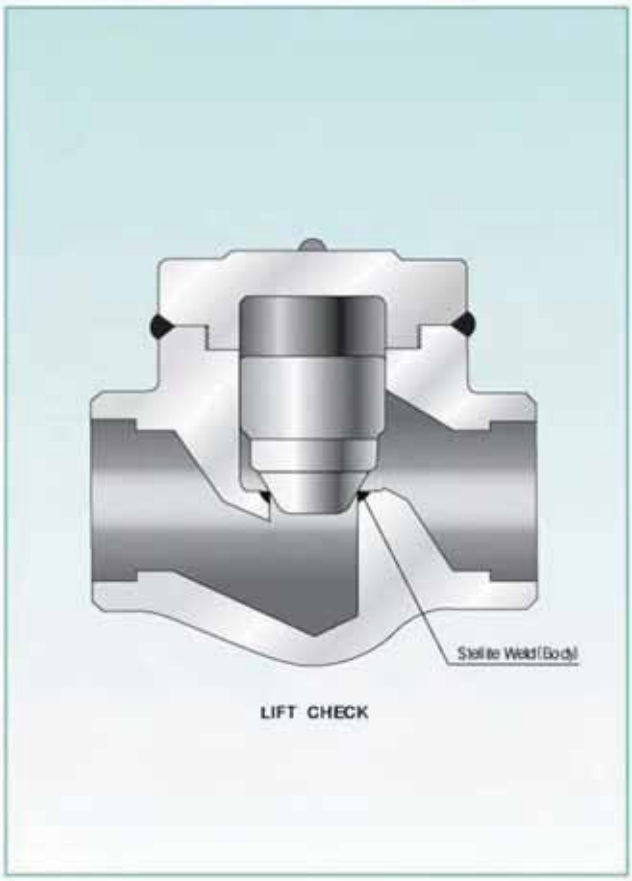

LIFT CHECK

DIMENSIONS & WEIGHTS

CLASS	Port	Valve Size		Center to Top, Open		End to End		Port Diameter		Approx. Weight	
				H		L		d			
		DN	in	mm	in	mm	in	mm	in	kg	lb
2500	Full	15	1/2	65	2.56	96	3.77	10	0.47	2.1	4.6
		20	3/4	76	2.99	123	4.84	13	0.62	4.0	8.8
		25	1	84	3.31	141	5.55	18	0.82	4.7	10.4
		32	1 1/4	101	3.98	163	6.41	24	1.02	7.1	15.6
		40	1 1/2	116	4.57	172	6.77	28	1.10	10.7	23.5
		50	2	136	5.35	220	8.66	35	1.33	12.5	27.5
4500	Full	15	1/2	101	3.98	163	6.41	8	0.31	7.1	15.6
		20	3/4	101	3.98	163	6.41	12	0.47	7.1	15.6
		25	1	101	3.98	163	6.41	14	0.55	7.1	15.6
		32	1 1/4	116	4.57	172	6.77	18	0.71	10.7	23.5
		40	1 1/2	116	4.57	172	6.77	22	0.87	10.7	23.5
		50	2	136	5.35	220	8.66	25	0.98	12.5	27.5

CHECK VALVES

FORGED STEEL SWING CHECK VALVES
BOLTED COVER

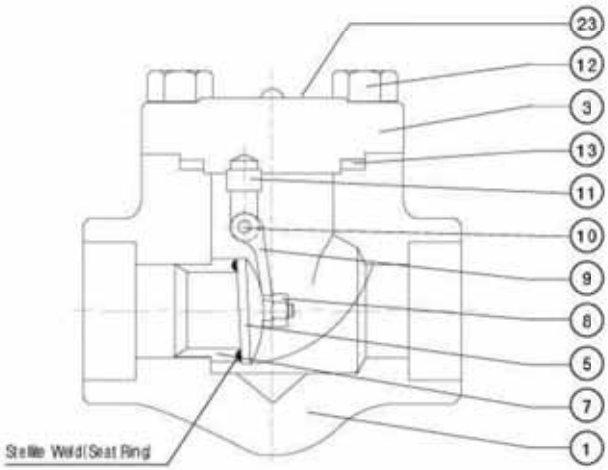

SWING CHECK

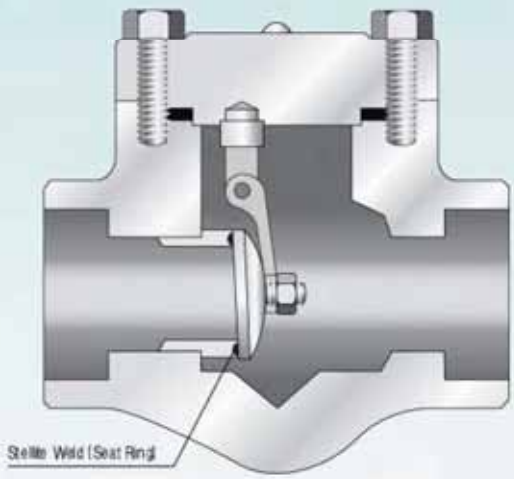

SWING CHECK

PARTS NOMENCLATURE

No.	Part Name	Q'ty	MATERIAL - ASTM				
			A105	F304	F304L	F316	F316L
1	Body	1	A105 (1)	A182-F304	A182-F304L	A182-F316	A182-F316L
3	Cover	1	A105 (1)	A182-F304	A182-F304L	A182-F316	A182-F316L
5	Disc	1	A217-CA15	A351-CF8	A351-CF8M		
7	Seat Ring	1	A276-410+STL'	A182-304+STL'	A182-316+STL'		
8	Retaining Nut	1	A194-2H	A194-8			
9	Hinge	1	A743-CA40	A351-CF8	A351-CF8M		
10	Hinge Pin	1	A276-304				
11	Supporter	1	A276-410	A276-304	A276-316		
12	Cover Bolt	4	A193-B7	A193-B8			
13	Gasket	1	SS304+Graphite			SS316+Graphite	
23	Nameplate	1	Aluminum				

(1) A105 also Available with 0.25% Maximum Carbon.

CHECK VALVES CLASS 800&1500

FORGED STEEL SWING CHECK VALVES
WELDED COVER

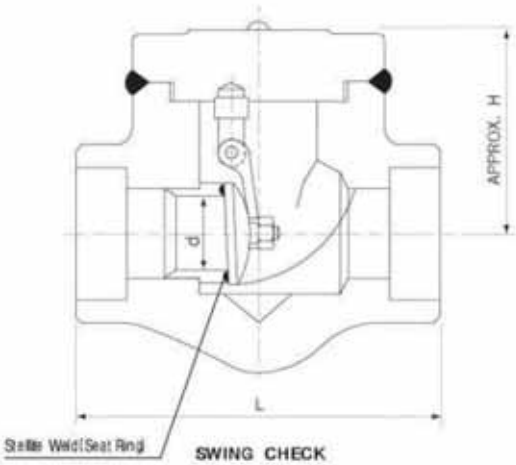

SWING CHECK

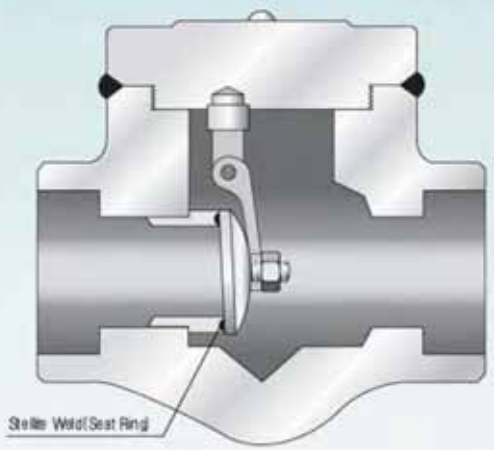

SWING CHECK

DIMENSIONS & WEIGHTS

CLASS	Port	Valve Size		Center to Top, Open		End to End		Port Diameter		Approx. Weight	
				H		L		d			
		DN	in	mm	in	mm	in	mm	in	kg	lb
800	Reduced	10	3/8	51	2.00	73	2.87	8	0.31	1.1	2.42
		15	1/2	51	2.00	73	2.87	0	0.39	1.0	2.2
		20	3/4	55	2.17	87	3.42	13	0.51	1.4	3.0
		25	1	65	2.56	96	3.77	19	0.75	2.2	4.85
		32	11/4	76	2.99	123	4.84	25	0.98	4.0	8.8
		40	11/2	84	3.31	141	5.55	30	1.18	4.1	9.0
		50	2	101	3.98	163	6.41	37	1.50	6.0	13.2
	Full	10	3/8	51	2.00	73	2.87	10	0.39	1.0	2.2
		15	1/2	55	2.17	87	3.42	13	0.51	1.4	3.0
		20	3/4	65	2.56	96	3.77	19	0.75	2.2	4.85
		25	1	76	2.99	123	4.84	25	0.98	4.0	8.8
		32	11/4	84	3.31	141	5.55	30	1.18	4.1	9.0
		40	11/2	101	3.98	163	6.41	37	1.50	6.0	13.2
		50	2	116	4.57	172	6.77	44.5	1.75	10.6	23.3
1500	Reduced	10	3/8	55	2.17	87	3.42	8	0.31	1.4	3.2
		15	1/2	55	2.17	87	3.42	10	0.39	1.4	3.2
		20	3/4	65	2.56	96	3.77	13	0.51	2.2	5.0
		25	1	76	2.99	123	4.84	19	0.75	4.0	9.2
		32	1 1/4	84	3.31	141	5.55	25	0.98	4.1	9.4
		40	1 1/2	101	3.98	163	6.41	30	1.18	6.0	13.8
		50	2	116	4.57	172	6.77	37	1.50	9.3	20.5
	Full	10	3/8	65	2.56	96	3.77	10	0.39	2.2	5.0
		15	1/2	65	2.56	96	3.77	13	0.51	2.2	5.0
		20	3/4	76	2.99	123	4.84	19	0.75	4.0	9.2
		25	1	84	3.31	141	5.55	25	0.98	4.1	9.4
		32	1 1/4	101	3.98	163	6.41	30	1.18	6.0	13.8
		40	1 1/2	116	4.57	172	6.77	37	1.50	9.3	20.5
		50	2	136	5.35	220	8.66	46	1.81	12.8	28.2

www.valvekorea.co.kr

CRYOGENIC VALVES

- Gate Valves
- Globe Valves
- Lift Check Valves
- Swing Check Valves
- Casting Swing Check Valves
- Ball Valves

GATE VALVES CLASS RF/150,300,900&1500

FORGED STEEL CRYOGENIC GATE VALVES
REDUCED BORE RF/150, 300, 900, 1500LB ENDS.
BOLTED BONNET OS &Y. RISING STEM RISING HANDWHEEL

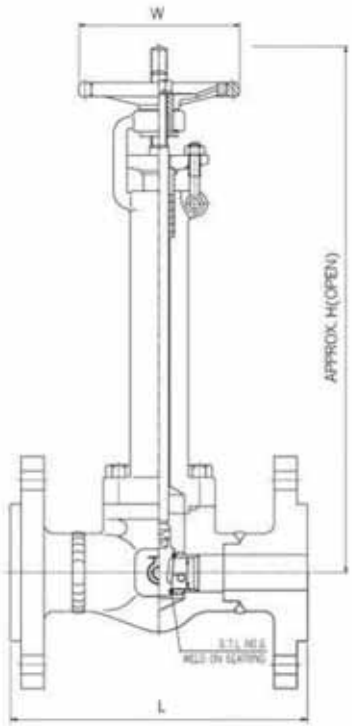

■MAIN COMPONENT MATERIAL

BODY	ASTM A182-F316L
BONNET	ASTM A182-F316L
DISC	ASTM A276-F316L
SEAT	ASTM A182-F316L(HF)
STEM	ASTM A276-F316L
GASKET	SPIRAL W GRAPHITE
BONNET BOLTED	ASTM A320-B8
GLAND PACKING	GRAPHITE

■BODY & BONNET STANDARD MATERIAL
ASTM A182-F304 / A182-F316 / A182-F316L

■VALVE DESIGN CONFORM TO BS5352
ANSI B16.34, BS6364
VALVE ENDS CONFORM TO ANSI B16.11

■SHELL AND SEAT LEAK TEST
ACCORDANCE WITH ANSI B16.34

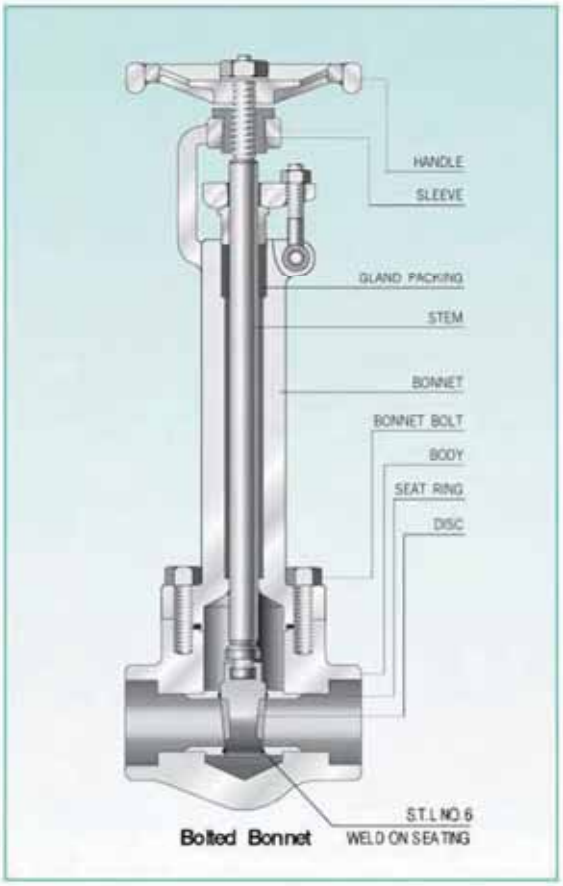

DIMENSIONS & WEIGHTS

CLASS	Valve Size		Center to Top, Open		End to End		Handlewheel Diameter		End to End		Port Diameter		Handlewheel Diameter	
			H		L (RF/150, 900LB)		W		L (RF/300,1500LB)		d			
	DN	in	mm	in	mm	in	mm	in	mm	in	mm	in	150LB kg / 300LB kg	300LB kg / 1500LB kg
150 300	15	1/2	250	9.98	108	4.25	95	3.74	140	5.51	10	0.39	3.40	4.45
	20	3/4	250	9.98	117	4.60	95	3.74	152	5.98	13	0.51	4.98	6.96
	25	1	280	11.2	127	5.00	105	4.13	165	6.49	19	0.74	6.87	9.10
	32	1 1/4	330	12.9	140	5.51	135	5.31	178	7.00	25	0.98	10.6	13.2
	40	1 1/2	330	12.9	165	5.55	135	5.31	190	7.48	30	1.18	10.6	13.2
	50	2	345	13.5	203	6.49	160	6.29	216	8.50	35	1.37	20.2	23.8
900 1500	15	1/2	250	9.98	216	8.50	95	3.74	216	8.50	10	0.39	7.48	7.48
	20	3/4	250	11.2	229	9.01	105	4.13	229	9.01	13	0.51	10.3	10.3
	25	1	330	12.9	254	10.2	135	5.31	254	10.2	19	0.74	15.9	15.9
	32	1 1/4	330	12.9	279	10.9	135	5.31	279	10.9	25	0.98	19.45	19.45
	40	1 1/2	345	13.5	305	12.0	135	5.31	305	12.0	30	1.18	19.45	19.45
	50	2	455	17.9	368	14.4	160	6.29	368	14.4	35	1.37	28.75	28.75

GLOBE VALVES CLASS 150~800&1500

FORGED STEEL CRYOGENIC GLOBE VALVES
REDUCED BORE SW ENDS. BOLTED BONNET OS & Y.
RISING STEM RISING HANDWHEEL

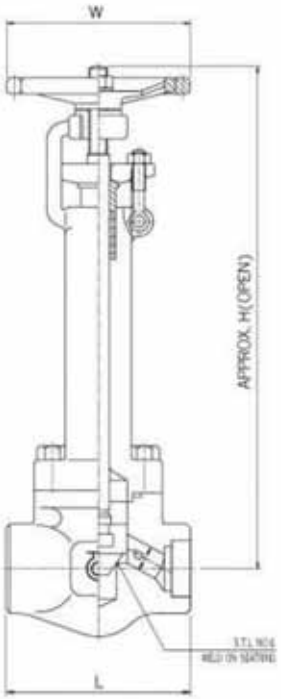

■ MAIN COMPONENT MATERIAL

BODY	ASTM A182-F316L
BONNET	ASTM A182-F316L
DISC	ASTM A276-F316L
SEAT	ASTM A182-F316L(HF)
STEM	ASTM A276-F316L
GASKET	SPIRAL W GRAPHITE
BONNET BOLTED	ASTM A320-BM
GLAND PACKING	GRAPHITE

■ BODY & BONNET STANDARD MATERIAL
ASTM A182-F304 / A182-F316 / A182-F316L

■ VALVE DESIGN CONFORM TO BS5352
ANSI B16.34, BS6364
VALVE ENDS CONFORM TO ANSI B16.11

■ SHELL AND SEAT LEAK TEST
ACCORDANCE WITH ANSI B16.34

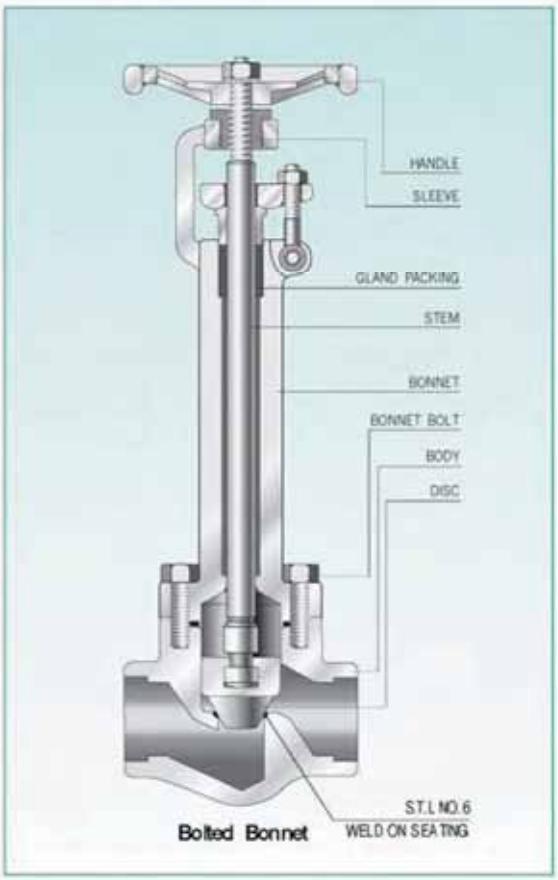

DIMENSIONS & WEIGHTS

CLASS	Valve Size		Center to Top, Open		End to End		Handlewheel Diameter		Port Diameter		Handlewheel Diameter	
			H		L		W		d			
	DN	in	mm	in	mm	in	mm	in	mm	in	kg	b
150 300 600 800	15	1/2	245	9.64	73	2.87	95	3.74	10	0.39	2.28	5.01
	20	3/4	245	9.64	87	3.42	95	3.74	13	0.51	3.15	6.93
	25	1	275	10.8	96	3.77	105	4.13	19	0.74	4.45	9.79
	32	1 1/4	325	12.7	123	4.84	135	5.31	25	0.98	8.75	19.2
	40	1 1/2	325	12.7	141	5.55	135	5.31	30	1.18	11.2	24.6
	50	2	340	13.3	163	6.41	160	6.29	35	1.37	14.5	3.19
1500	15	1/2	245	9.64	87	3.42	95	3.74	10	0.39	3.15	6.93
	20	3/4	245	9.64	96	3.77	105	4.13	13	0.51	4.45	9.79
	25	1	325	12.7	123	4.84	135	5.31	19	0.74	8.75	19.2
	32	1 1/4	325	12.7	141	5.55	135	5.31	25	0.98	11.2	24.6
	40	1 1/2	340	13.3	163	6.41	135	5.31	30	1.18	14.5	3.19
	50	2	450	17.7	172	6.77	160	6.29	35	1.37	19.5	4.29

LIFT CHECK VALVES CLASS 150~800&1500

FORGED STEEL CRYOGENIC SPRING LIFT CHECK VALVES
REDUCED BORE SW ENDS. BOLTED COVER

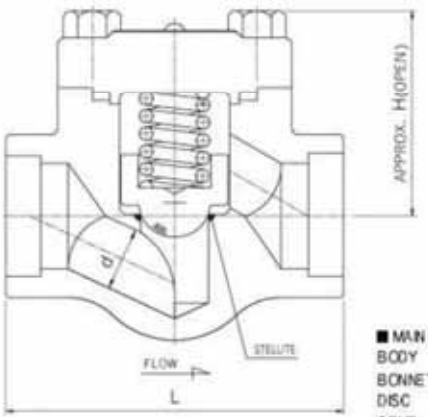

■ MAIN COMPONENT MATERIAL

BODY	ASTM A182-F316L
BONNET	ASTM A182-F316L
DISC	ASTM A276-F316L
SEAT	ASTM A182-F316L(HF)
STEM	ASTM A276-F316L
BONNET BOLTED	ASTM A320-B8M

■ BODY & BONNET STANDARD MATERIAL
ASTM A182-F304/A182-F316/A182-F316L

■ VALVE DESIGN CONFORM TO BS5352
ANSI B16.34, BS6364
VALVE ENDS CONFORM TO ANSI B16.11

■ SHELL AND SEAT LEAK TEST
ACCORDANCE WITH ANSI B16.34

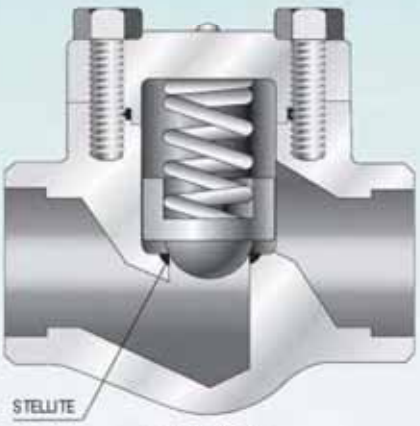

Bolted Bonnet

DIMENSIONS & WEIGHTS

CLASS	Valve Size		Center to Top, Open		End to End		Port Diameter		Approx. Weight	
			H		L		d			
	DN	in	mm	in	mm	in	mm	in	kg	lb
150 300 600 800	15	1/2	51	2.00	73	2.87	10	0.39	1.25	2.64
	20	3/4	55	2.17	87	3.42	13	0.51	2.15	4.73
	25	1	65	2.56	96	3.77	19	0.74	3.14	6.90
	32	1 1/4	76	2.99	123	4.84	25	0.98	4.89	10.8
	40	1 1/2	84	3.31	141	5.55	30	1.18	5.22	11.4
	50	2	101	3.98	163	6.41	35	1.37	6.23	13.7
1500	15	1/2	55	2.17	87	3.42	13	0.51	2.15	4.73
	20	3/4	65	2.56	96	3.77	19	0.74	3.14	6.90
	25	1	76	2.99	123	4.84	25	0.98	4.89	10.8
	32	1 1/4	84	3.31	141	5.55	30	1.18	5.22	11.4
	40	1 1/2	101	3.98	163	6.41	35	1.37	6.23	13.7
	50	2	116	4.57	172	6.77	38	1.49	7.89	17.3

SWING CHECK VALVES RF(FLANGE-150,300)

FORGED STEEL CRYOGENIC SWING CHECK VALVES
REDUCED BORE RF ENDS. BOLTED COVER

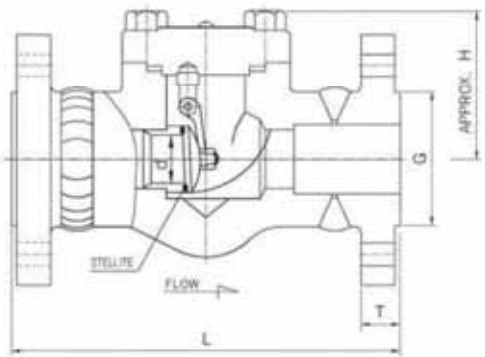

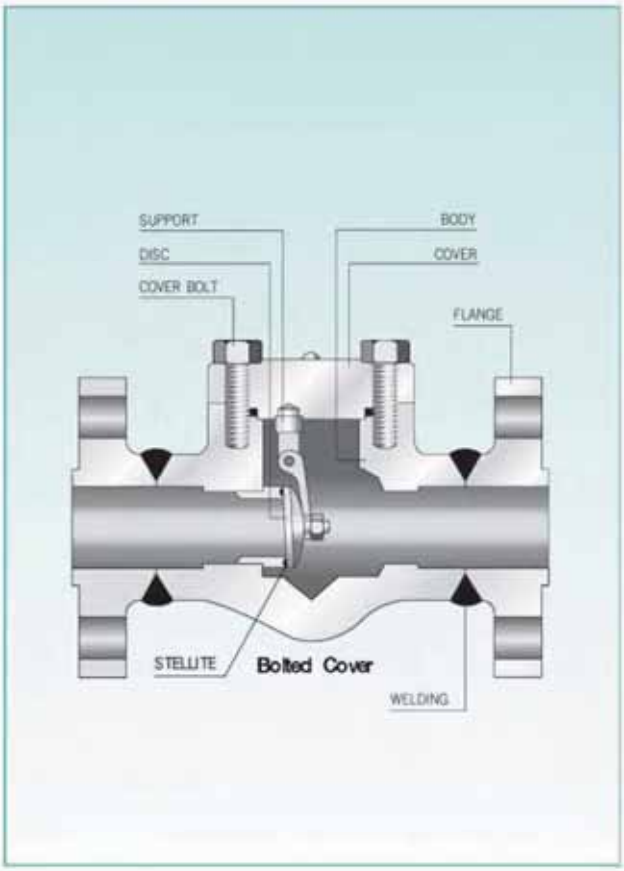

■ MAIN COMPONENT MATERIAL

BODY	ASTM A182-F316L
BONNET	ASTM A182-F316L
DISC	ASTM A276-F316L
SEAT	ASTM A182-F316L(HF)
GASKET	SPIRAL W GRAPHITE
BONNET BOLTED	ASTM A320-8M

■ BODY & BONNET STANDARD MATERIAL
ASTM A182-F304/A182-F316/A182-F316L

■ VALVE DESIGN CONFORM TO BS5352
ANSI B16.34, BS6364
VALVE ENDS CONFORM TO ANSI B16.11

■ SHELL AND SEAT LEAK TEST
ACCORDANCE WITH ANSI B16.34

DIMENSIONS & WEIGHTS

CLASS	Valve Size		Center to Top, Open		End to End		Gasket Diameter		Thickness		Port Diameter		Approx. Weight	
			H		L		G		T		d			
	DN	in	mm	in	mm	in	mm	in	mm	in	mm	in	kg	lb
150	15	1/2	48	1.89	108	4.25	35.1	1.38	11.2	0.44	10	0.39	2.00	4.4
	20	3/4	48	1.89	117	4.60	43.0	1.69	12.7	0.50	13	0.51	2.82	6.2
	25	1	63	2.48	127	5.00	50.8	2.00	14.3	0.56	19	0.75	3.79	8.3
	32	1 1/4	85	3.35	165	6.49	63.5	2.50	15.7	0.62	25	0.98	7.19	15.8
	40	1 1/2	85	3.35	165	6.49	73.2	2.88	17.5	0.69	30	1.43	7.19	15.8
	50	2	104	4.09	203	7.99	92.0	3.62	19.1	0.75	37	1.46	11.62	25.5
300	15	1/2	48	1.89	152	6.00	35.1	1.38	14.2	0.56	10	0.39	2.00	4.4
	20	3/4	48	1.89	178	7.00	43.0	1.69	15.7	0.62	13	0.51	2.82	6.2
	25	1	63	2.48	203	8.00	50.8	2.00	17.5	0.69	19	0.75	3.79	8.3
	32	1 1/4	85	3.35	216	8.50	63.5	2.50	19.1	0.75	25	0.98	7.19	15.8
	40	1 1/2	85	3.35	229	9.00	73.2	2.88	20.6	0.81	30	1.43	7.19	15.8
	50	2	104	4.09	267	10.50	92.0	3.62	22.4	0.88	37	1.46	11.62	25.5

SWING CHECK VALVES CLASS 150&300

CASTING STEEL CRYOGENIC SWING CHECK VALVES
REDUCED BORE RF ENDS. BOLTED COVER

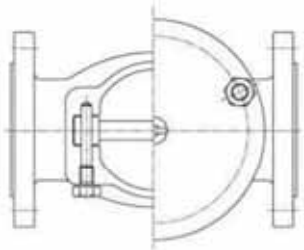

■ MAIN COMPONENT MATERIAL

BODY	A351-CF8M
COVER	A351-CF8M
DISC	A351-CF8M
SEAT	A351-CF8M(HF)
GASKET	SPIRAL W GRAPHITE
BONNET BOLTED	ASTM A320-B8M

■ BODY & BONNET STANDARD MATERIAL A351-CF8/A351-CF8M/A351-CF3M

■ VALVES COMPLY WITH APPLICABLE REQUIREMENTS OF API 603 MSS SP-42

■ PRESSURE-TEMPERATURE RATINGS: ANSI B16.34
ACCORDANCE WITH ANSI B16.34
SHELL WALL THICKNESS : ANSI B16.34

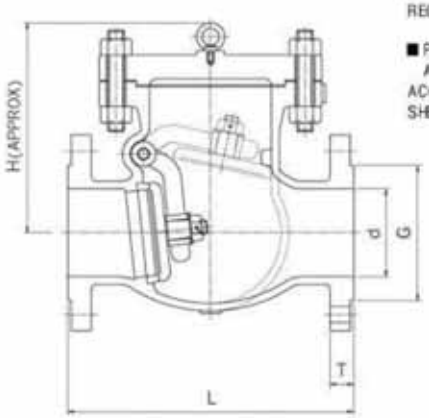

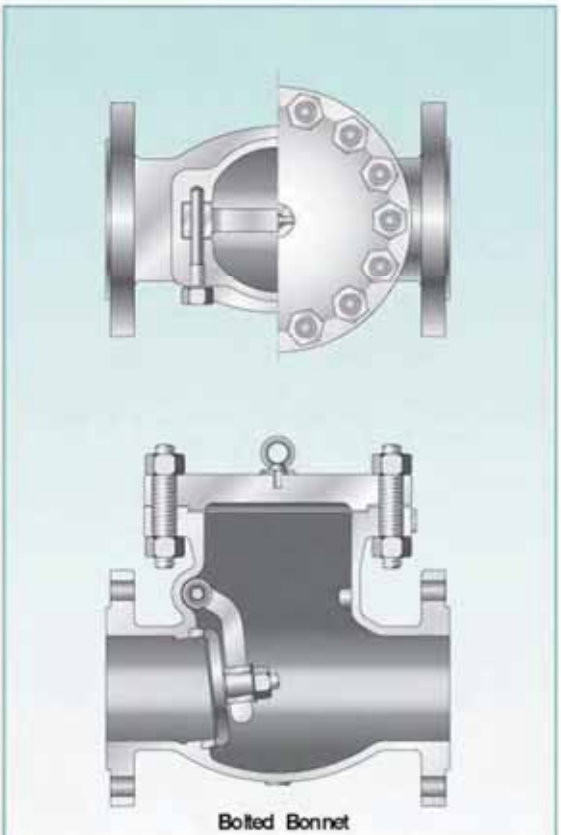

DIMENSIONS & WEIGHTS

CLASS	Valve Size		Center to Top, Open		End to End		Gasket Diameter		Thickness		Port Diameter		Handlewheel Diameter	
			H		L		G		T		d			
	DN	in	mm	in	mm	in	mm	in	mm	in	mm	in	kg	lb
150	65	2 1/2	160	6.29	216	8.50	104.6	4.11	17.6	0.69	65	2.55	14.5	31.9
	80	3	170	6.67	241	9.49	127	5.00	19.1	0.75	80	3.14	20.0	44.4
	100	4	210	8.26	292	11.5	157.2	6.18	23.9	0.94	100	3.92	33.0	72.6
	125	5	230	9.05	330	12.9	185.7	7.31	23.9	0.94	125	4.92	46.0	101.2
	150	6	250	9.84	356	14.0	215.9	8.50	25.4	1.0	150	5.90	67.0	147.4
	200	8	280	11.0	495	19.4	269.7	10.6	28.5	1.22	200	2.07	133.0	292.6
300	65	2 1/2	170	6.69	292	19.4	104.6	4.11	25.4	1.00	65	2.55	31.8	69.9
	80	3	185	7.28	318	12.5	127	5.00	28.5	1.12	80	3.14	38.7	85.1
	100	4	230	9.05	356	14.0	157.2	6.18	31.8	1.25	100	3.92	60.0	132.0
	125	5	270	10.6	400	15.7	185.7	7.31	35.1	1.38	125	4.92	78.7	173.1
	150	6	295	11.6	444	17.4	215.9	8.50	36.6	1.44	150	5.90	118.0	259.6
	200	8	345	13.5	533	20.9	269.7	10.6	41.2	1.62	200	2.07	207.0	888.0

BALL CHECK VALVES CLASS 800&1500

3-PIECE BALL VALVES

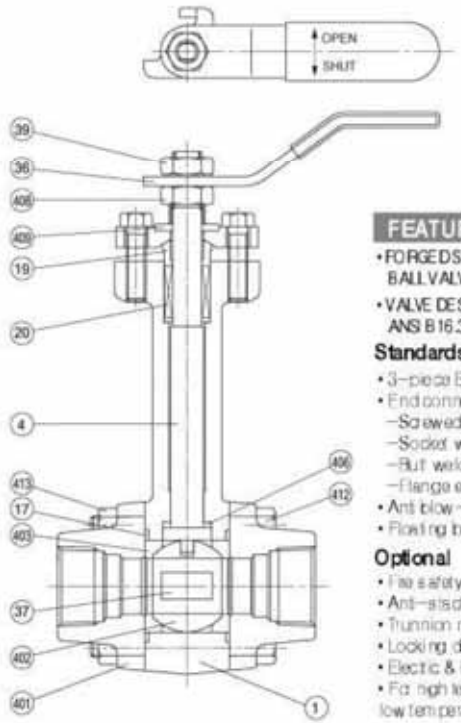

FEATURES

- FORGED STEEL CRYOGENIC BALL VALVE FULL BORE
- VALVE DESIGN CONFORM TO BS5351, ANSI B16.34

Standards

- 3-piece Ball Valve
- End connection:
  - Screwed end/ANSI B 1.20.1
  - Socket weld to ASME/ANSI B 16.11
  - Butt weld end ASME/ANSI B 16.25
  - Flange end/ANSI B16.34
- Anti blow-out proof stem
- Floating ball

Optional

- Fire safety
- Anti-static device
- Trunnion mounted
- Locking device
- Electric & Pneumatic Actuator
- For high temperature(max.450℃) & low temperature service(max.-196℃)

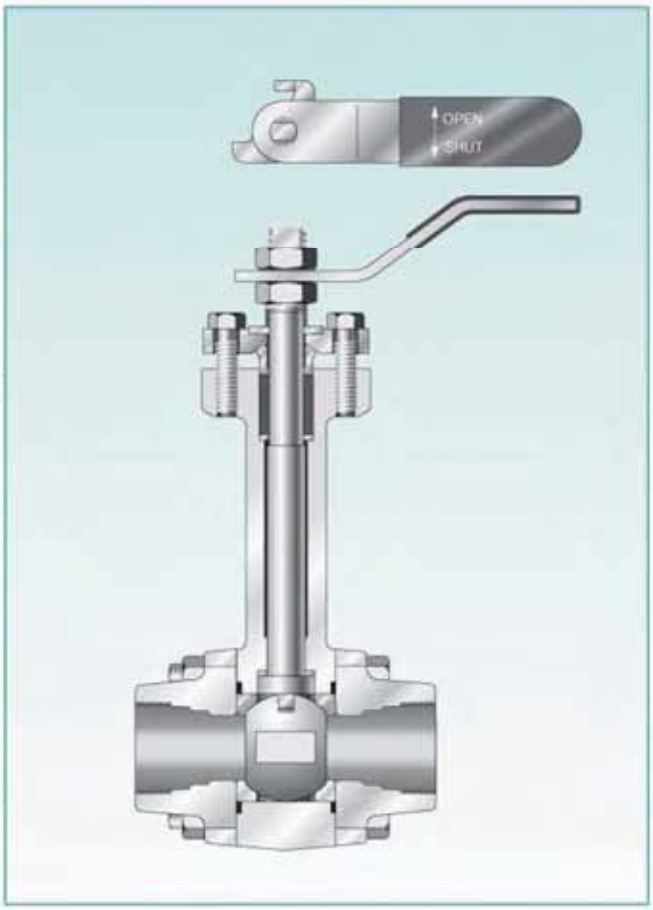

PARTS NOMENCLATURE

Part No.	Part Name	ASTM Specifications		
		A182-F304	A182-F316	A182-F316L
1	Body	A182-F304	A182-F316	A182-F316L
4	Stem	A276-304	A276-316	A276-316L
17	Gasket	PTFE / RTFE		
19	Gland	A276-304		
20	Gland Packing	Reinforced PTFE / RTFE		
36	Handle	A108-1020		
37	Nameplate	ALUMINIUM / SS304		
39	Handle Nut	A276-304		
401	Body Cap	A182-F304	A182-F316	
402	Ball	A276-304	A276-316	A276-316L
403	Seat Ring	PTFE / RTFE / PEEK / CARBON		
406	Thrust Bearing	Reinforced PTFE		
408	Stem Nut	A276-304		
409	Tab Washer	A167-304		
412	Cap Bolt	A193-B8		
413	Cap Bolt Nut	A194-8		

BALL CHECK VALVES CLASS 150,300,600&800

3-PIECE BALL VALVES

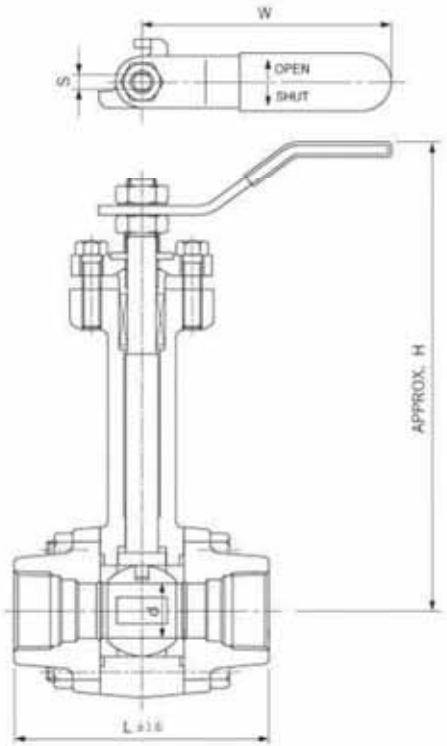

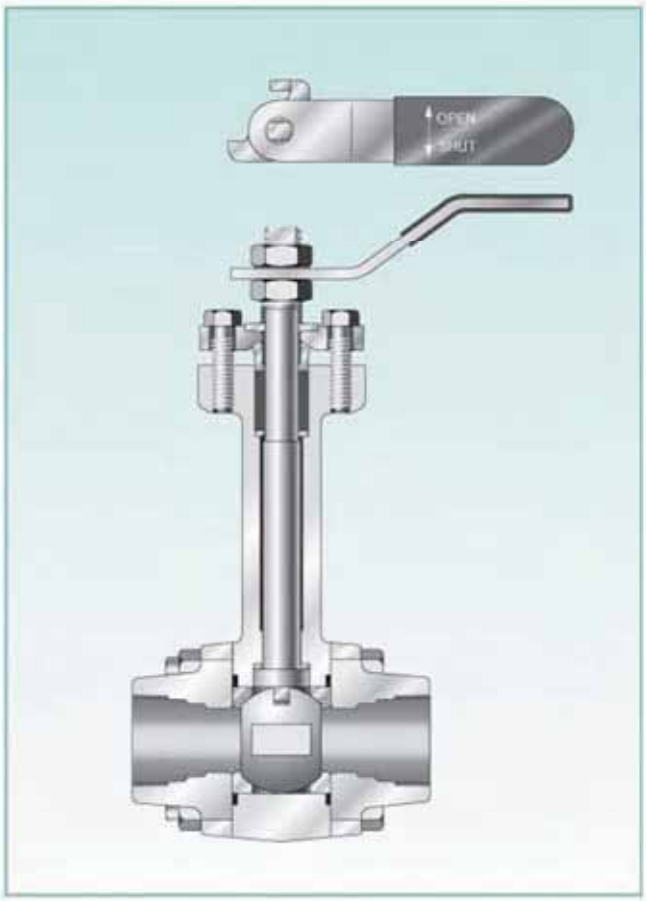

DIMENSIONS & WEIGHTS

CLASS	Valve Size		Center to Top H		End to End L		Length of Handle W		Top of Stem S		Port Diameter d		Approx. Weight	
	DN	in.	mm	in.	mm	in.	mm	in.	mm	in.	mm	in.	kg	lb
150 300 600 800	15	1/2	280	11.0	75	2.95	130	5.12	7.7	0.30	14.2	0.56	2.3	5.06
	20	3/4	280	11.0	75	2.95	130	5.12	7.7	0.30	14.2	0.56	2.3	5.06
	25	1	300	11.8	95	3.74	160	6.30	8.8	0.35	20.5	0.81	4.7	10.3
	32	1 1/4	340	13.4	116	4.57	230	9.05	8.8	0.35	26.0	1.02	6.8	15.0
	40	1 1/2	340	13.4	116	4.57	230	9.05	8.8	0.35	31.6	1.24	6.8	15.0
	50	2	360	14.1	128	5.04	230	9.05	8.8	0.35	38.1	1.50	8.9	19.6

www.valvekorea.co.kr

BELLOWS-SEAL VALVES

- Gate Valves
- Globe Valves
- Casting Globe Valves

GATE VALVES CLASS 150~800&1500

FORGED STEEL BELLOWS-SEAL GATE VALVES
BOLTED BONNET OS &Y.

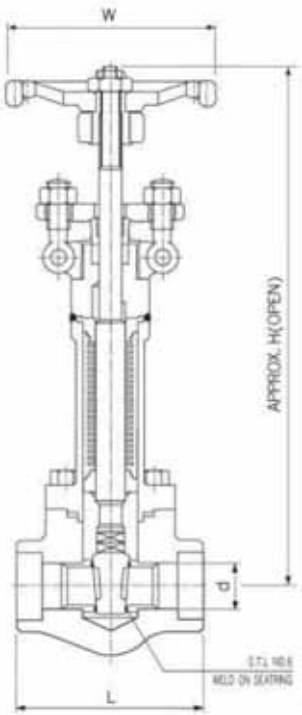

■ VALVE DESIGN CONFORM TO BS352
ANSI B16.3.4,MSS-SP 117

■ VALVE ENDS CONFORM TO ANSI B16.11
SHEEL AND SEAT LEAKAGE TEST
ACCORDANCE WITH ANSI B16.3.4

■ RIGHT TABLE INDICATE THE ASTM A105
OTHER MATERIAL ACCORDANCE

※ BELLOWS TEST PRESSURE : 102kgf/㎠

DIMENSIONS & WEIGHTS

CLASS	Valve Size		Center to Top, Open		End to End		Handlewheel Diameter		Port Diameter		Handlewheel Diameter	
			H		L		W		d			
	DN	in	mm	in	mm	in	mm	in	mm	in	kg	lb
150 300 600 800	15	1/2	279	10.98	96	3.77	105	4.13	10	0.39	4.23	9.30
	20	3/4	279	10.98	96	3.77	105	4.13	13	0.51	4.23	9.30
	25	1	345	13.58	141	5.55	135	5.31	19	0.74	8.45	18.59
	32	1 1/4	345	13.58	141	5.55	135	5.31	25	0.98	8.12	17.86
	40	1 1/2	345	13.58	141	5.55	135	5.31	30	1.18	8.12	17.86
	50	2	385	15.15	163	6.41	160	6.29	35	1.37	14.2	31.24
1500	15	1/2	345	13.58	141	5.55	135	5.31	10	0.39	6.25	13.75
	20	3/4	345	13.58	141	5.55	135	5.31	13	0.51	6.25	13.75
	25	1	385	15.15	163	6.41	160	6.29	19	0.74	10.25	22.55
	32	1 1/4	385	15.15	163	6.41	160	6.29	25	0.98	10.25	22.55
	40	1 1/2	385	15.15	163	6.41	160	6.29	30	1.18	10.25	22.55
	50	2	445	17.51	172	6.77	180	7.08	35	1.37	12.84	28.24

GLOBE VALVES CLASS 150~800&1500

FORGED STEEL BELLOWS-SEAL GLOBE VALVES
BOLTED BONNET OS & Y.

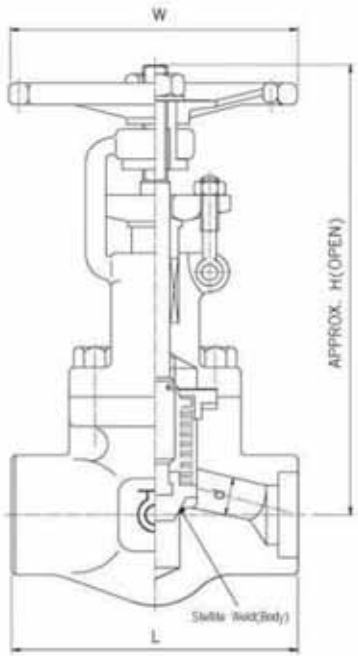

■ VALVE DESIGN CONFORM TO BS3352 ANSI B16.34, MSS-SP 117

■ VALVE ENDS CONFORM TO ANSI B16.11 SHEEL AND SEAT LEAKAGE TEST ACCORDANCE WITH ANSI B16.34

■ RIGHT TABLE INDICATE THE ASTM A105 OTHER MATERIAL ACCORDANCE

※ BELLOWS TEST PRESSURE : 102kgf/㎠

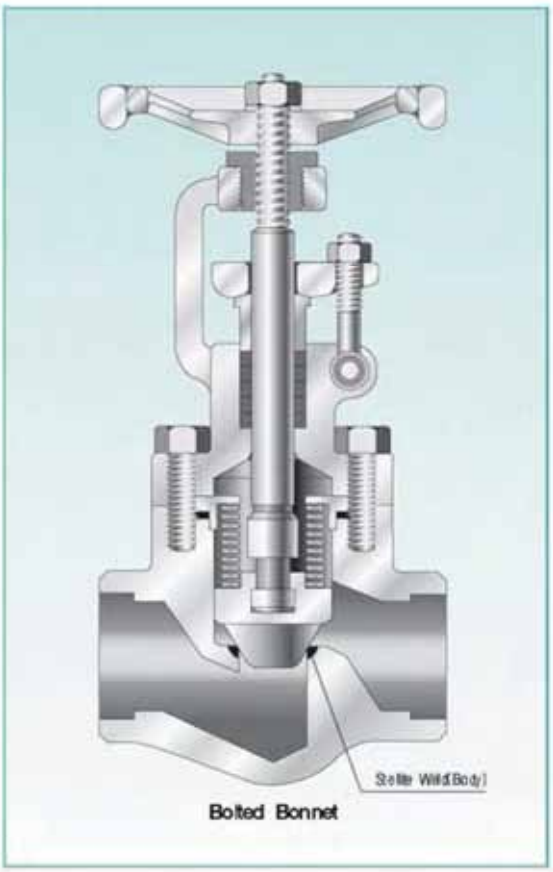

Bolted Bonnet

DIMENSIONS & WEIGHTS

CLASS	Valve Size		Center to Top, Open		End to End		Handlewheel Diameter		Port Diameter		Handlewheel Diameter	
			H		L		W		d			
	DN	in	mm	in	mm	in	mm	in	mm	in	kg	lb
150 300 600 800	15	1/2	180	7.08	96	3.77	105	4.13	10	0.39	2.85	6.27
	20	3/4	180	7.08	96	3.77	105	4.13	13	0.51	2.85	6.27
	25	1	226	8.89	141	5.55	135	5.31	19	0.74	6.25	13.75
	32	1 1/4	226	8.89	141	5.55	135	5.31	25	0.98	6.25	13.75
	40	1 1/2	226	8.89	141	5.55	135	5.31	30	1.18	6.25	13.75
	50	2	255	10.03	163	6.41	160	6.29	35	1.37	10.25	22.55
1500	15	1/2	226	8.89	141	5.55	135	5.31	10	0.39	6.25	13.75
	20	3/4	226	8.89	141	5.55	135	5.31	13	0.51	6.25	13.75
	25	1	255	10.03	163	6.41	160	6.29	19	0.74	10.25	22.55
	32	1 1/4	255	10.03	163	6.41	160	6.29	25	0.98	10.25	22.55
	40	1 1/2	255	10.03	163	6.41	160	6.29	30	1.18	10.25	22.55
	50	2	287	11.29	172	6.77	180	7.08	35	1.37	12.84	28.24

GLOBE VALVES CLASS 150,300&1500

CASTING BELLOWS-SEAL GLOBE VALVES
BOLTED BONNET OS &Y.

■ FULL PORT, BOLTED BONNET
OUTSIDE SCREW & YOKE
INTEGRAL SEATS, FLANGE ENDS

VALVE CODE	KS B2361/ANSI B1634
FACE TO FACE DIMENSION	KS B2306/ANSI B1610
END FLANGE DIMENSION	KS B1511/ANSI B165
PRESSURE	API 598

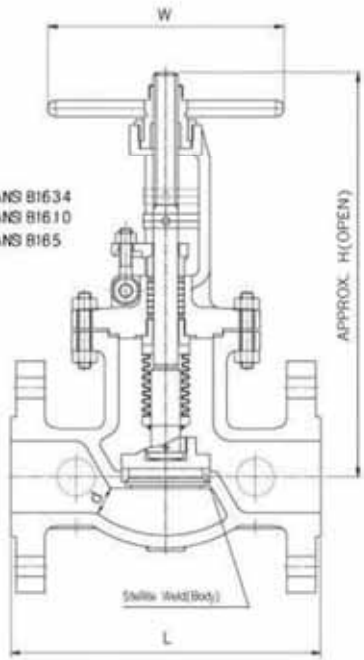

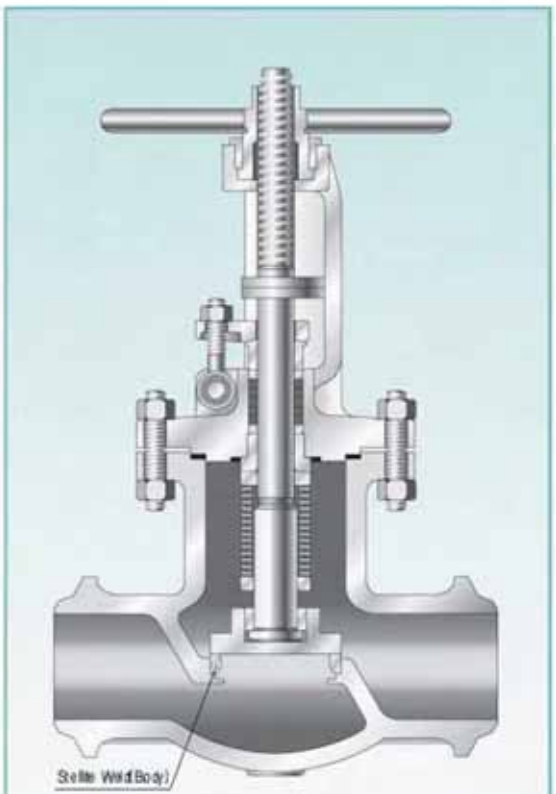

Bolted Bonnet/Butt Welding

DIMENSIONS & WEIGHTS

CLASS	Valve Size		Center to Top, Open		End to End		Handlewheel Diameter		Port Diameter		Handlewheel Diameter	
			H		L		W		d			
	DN	in	mm	in	mm	in	mm	in	mm	in	kg	lb
10K/150	65	2 1/2	495	19.48	216	8.50	160	6.29	65	2.55	23.8	52.36
	80	3	620	24.40	241	9.48	180	7.08	80	3.14	34.4	75.68
	100	4	745	29.33	292	11.49	200	7.87	100	3.93	56.4	124.0
	125	5	755	29.72	305	12.00	250	9.84	125	4.92	82.5	181.5
	150	6	835	32.87	406	15.98	300	11.81	150	5.90	118.4	260.4
	200	8	920	36.22	495	19.48	400	15.74	200	7.08	185.6	408.3
20K/300	65	2 1/2	530	20.86	292	11.49	200	7.87	65	2.55	25.5	56.10
	80	3	650	25.59	318	12.51	250	9.84	80	3.14	36.5	80.30
	100	4	780	30.70	356	14.01	300	11.81	100	3.93	59.4	130.6
	125	5	885	34.84	400	15.74	335	13.18	125	4.92	87.4	192.2
	150	6	900	35.43	444	17.48	400	15.74	150	5.90	122.6	269.7
	200	8	1150	45.27	559	22.00	450	17.71	200	7.08	189.5	416.9

www.valvekorea.co.kr

BALL VALVES
Y-STRAINER VALVES

- 3-piece Ball Valves
- Casting Y-Strainer Valves
- Y-Strainer Valves

BALL VALVES

3-PIECE BALL VALVES

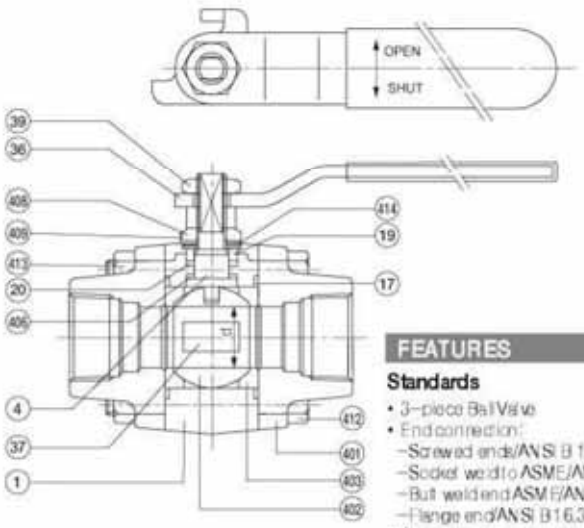

FEATURES

Standards

- 3-piece Ball Valve
- End connection:
  - Screwed ends/ANSI B 1.20.1
  - Socket weld to ASME/ANSI B 16.11
  - Butt weld end ASME/ANSI B 16.25
  - Flange end/ANSI B16.34
- Anti blow-out proof stem
- Floating ball

Optional

- Fire safety
- Anti-static device
- Trunnion mounted
- Locking device
- Electric & Pneumatic Actuator
- For high temperature(max.450℃) & low temperature service(max.-196℃)

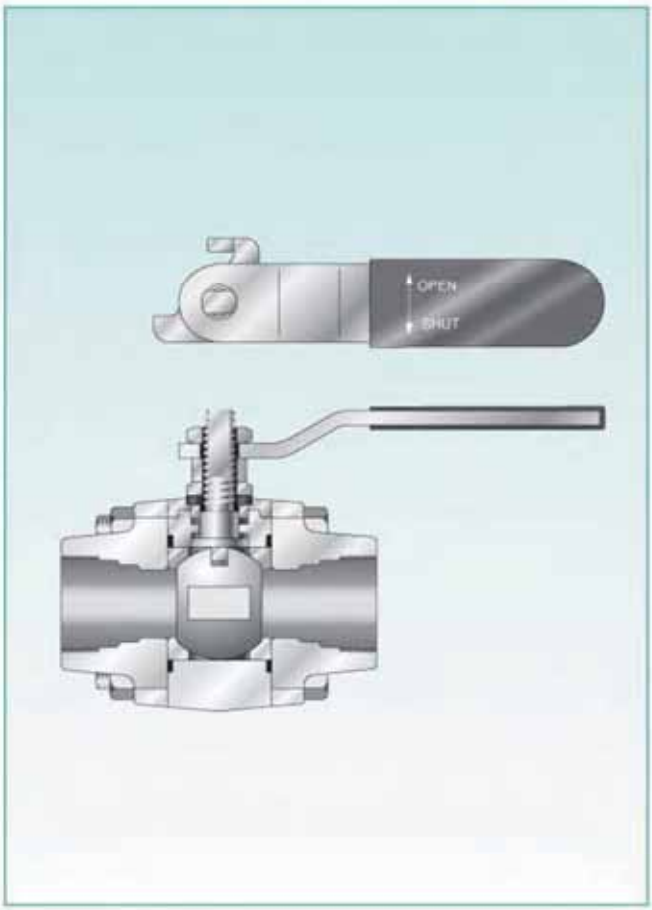

PARTS NOMENCLATURE

Part No.	Part Name	ASTM Specifications		
		A105	A182-F304	A182-F316
1	Body	A105 (1)	A182-F304	A182-F316
4	Stem	A276-304		A276-316
17	Gasket	PTFE / RTFE (SS304+Graphite: Metal Seat)		
19	Gland	A276-304		
20	Gland Packing	Reinforced PTFE / RTFE (Graphite: Metal Seat)		
36	Handle	A108-1020		
37	Nameplate	ALUMINIUM / SS304		
39	Handle Nut	A276-304		
401	Body Cap	A105 (1)	A182-F304	A182-F316
402	Ball	A276-304		A276-316
403	Seat Ring	PTFE / RTFE / PEEK / CARBON (A276-304, 316: Metal Seat)		
406	Thrust Bearing	Reinforced PTFE (Graphite: Metal Seat)		
408	Stem Nut	A276-304		
409	Tab Washer	A167-304		
412	Cap Bolt	A193-B7	A193-B8	
413	Cap Nut	A194-2H	A194-8	
414	Conical Spring	A276-302		

(1) A105 also Available with 0.25% Maximum Carbon.
Other Materials also Available on Application

BALL VALVES CLASS600,800&1500

3-PIECE BALL VALVES

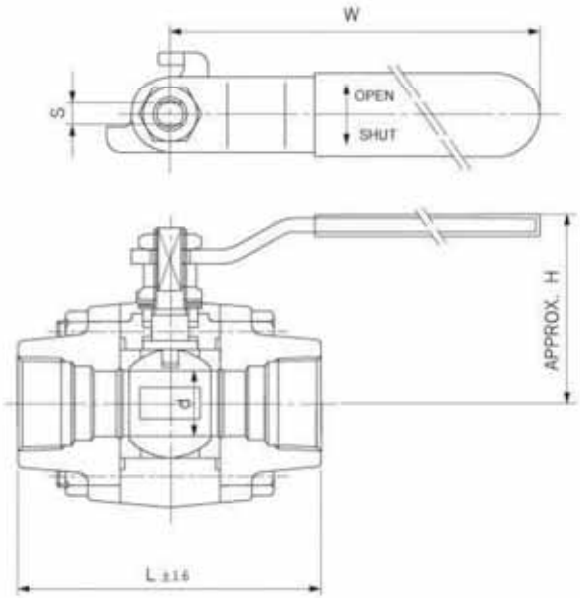

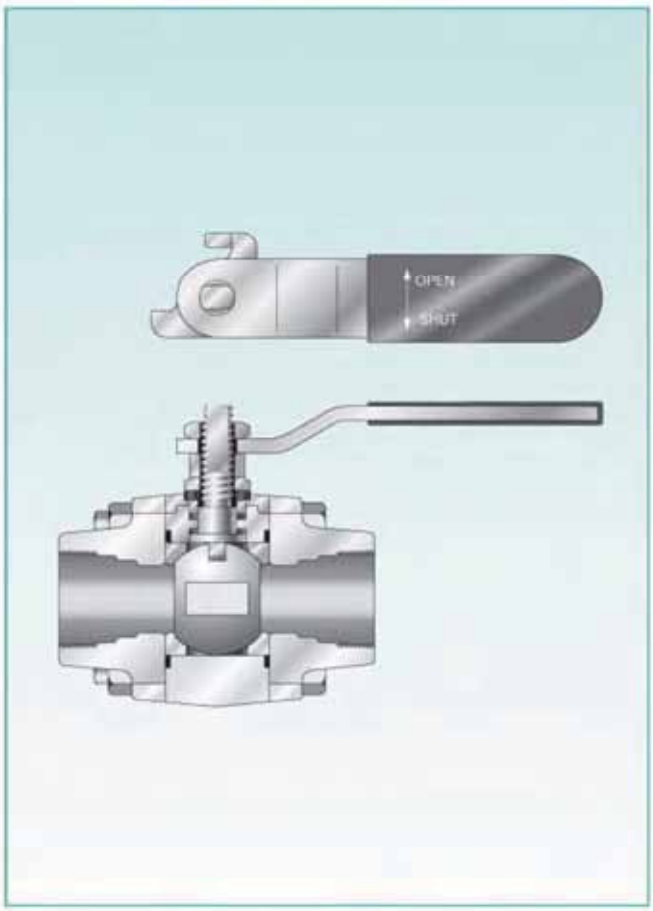

DIMENSIONS & WEIGHTS

CLASS	Valve Size		Center to Top H		End to End L		Length of Handle W		Top of Stem S		Port Diameter d		Approx. Weight	
	DN	in.	mm	in.	mm	in.	mm	in.	mm	in.	mm	in.	kg	lb
600 800	15	1/2	62	2.44	75	2.95	130	5.12	5.7	0.22	14.2	0.56	0.78	1.72
	20	3/4	62	2.44	75	2.95	130	5.12	5.7	0.22	14.2	0.56	0.78	1.72
	25	1	74	2.91	95	3.74	160	6.30	7.7	0.30	20.5	0.81	1.50	3.31
	32	1 1/4	88	3.47	116	4.57	230	9.06	8.8	0.35	26.0	1.02	2.95	6.50
	40	1 1/2	88	3.47	116	4.57	230	9.06	8.8	0.35	31.6	1.24	2.95	6.50
	50	2	93	3.66	128	5.04	230	9.06	8.8	0.35	38.1	1.50	4.00	8.82
1500	15	1/2	62	2.44	75	2.95	130	5.12	5.7	0.22	14.2	0.56	0.78	1.72
	20	3/4	74	2.91	95	3.74	160	6.30	7.7	0.30	20.5	0.81	1.50	3.31
	25	1	88	3.47	116	4.57	230	9.06	8.8	0.35	26.0	1.02	2.95	6.50
	32	1 1/4	88	3.47	116	4.57	230	9.06	8.8	0.35	31.6	1.24	2.95	6.50
	40	1 1/2	93	3.66	128	5.04	230	9.06	8.8	0.35	38.1	1.50	4.00	8.82
	50	2	125	4.92	160	6.29	230	9.06	8.8	0.35	45.2	1.78	8.90	19.60

Y-STRAINER VALVES CLASS150,300,600,1500&2500

CASTING Y-STRAINER VALVES

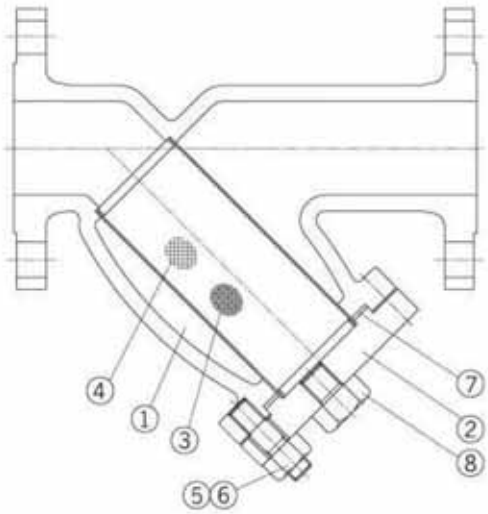

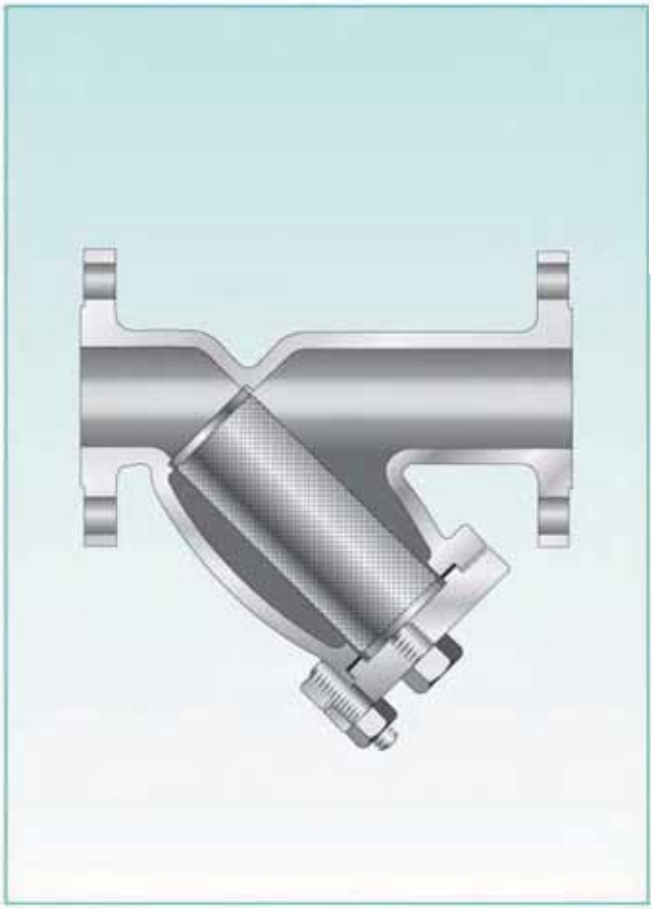

PARTS NOMENCLATURE

Part	Part Name	Qty	Materials
1	Body	1	A216-WCB
2	Cover	1	A216-WCB
3	Screen Holder	1	A240-304
4	Screen	1	A240-304
5	Cover Bolt	4	A193-B7
6	Cover Nut	1	A194-2H

Part	Part Name	Qty	Materials
7	Gasket	1	304+G.P
8	Drain Plug	1	A105

DIMENSIONS

CLASS	Size		CLASS	Size		CLASS	Size		CLASS	Size		CLASS	Size	
	DN	in		DN	in		DN	in		DN	in		DN	in
150	50	2	300	50	2	600	50	2	1500	50	2	2500	50	2
	65	2 1/2		65	2 1/2		65	2 1/2		65	2 1/2		65	2 1/2
	80	3		80	3		80	3		80	3		80	3
	100	4		100	4		100	4		100	4		100	4
	125	5		125	5		125	5		125	5		125	5
	150	6		150	6		150	6		150	6		150	6
	200	8		200	8		200	8		200	8		-	-
	250	10		250	10		250	10		-	-		-	-
	300	12		300	12		-	-		-	-		-	-
	350	14		-	-		-	-		-	-		-	-

Y-STRAINER VALVES CLASS 600&1500

FORGED STEEL Y-STRAINER VALVES

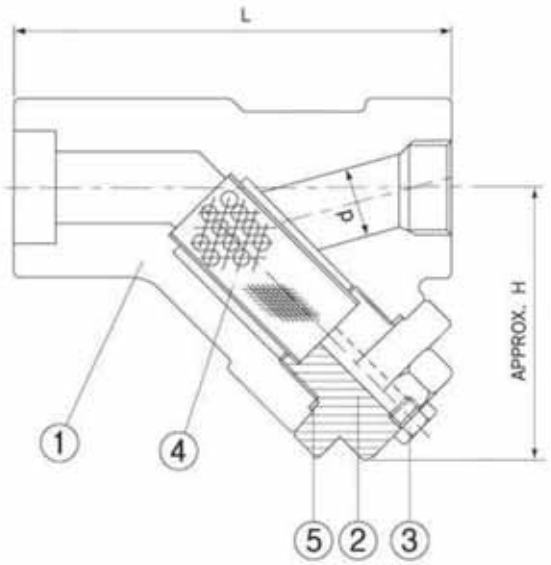

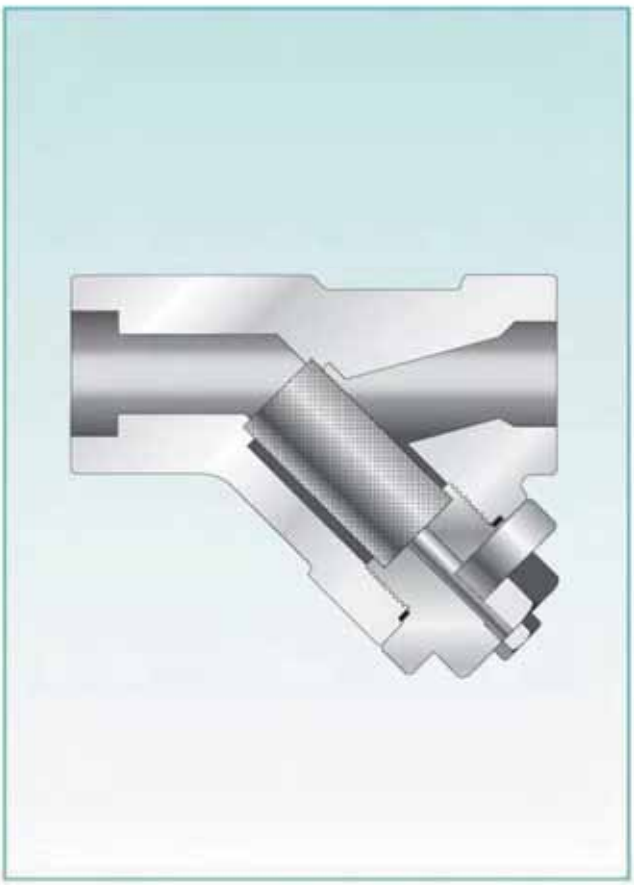

PARTS NOMENCLATURE

Part	Part Name	Qty	Materials		
1	Body	1	A105(1)	F304	F316
2	Cover	1	A105(1)	F304	F316
3	Plug	1	A105	F304	F316
4	Screen	1	SUS304	SUS304	SUS316
5	Gasket	1	SUS304 + GRAPHITE	SUS304 + GRAPHITE	SUS316 + GRAPHITE

DIMENSIONS & WEIGHTS

CLASS	Valve Size		Center to Top, Open		End to End		End to Hub Diameter		Approx. Weight	
			H		L		d			
	DN	in	mm	in	mm	in	mm	in	kg	lb
600	15	1/2	84	3.30	110	4.33	15	0.59	1.8	4.0
	20	3/4	84	3.30	110	4.33	20	0.79	1.7	3.7
	25	1	90	3.54	120	4.72	25	0.98	2.3	5.1
	32	1 1/4	120	4.72	170	6.69	32	1.26	5.8	12.8
	40	1 1/2	120	4.72	170	6.69	40	1.57	5.6	12.3
	50	2	142	5.59	200	7.87	50	1.97	6.7	14.8
1500	15	1/2	84	3.30	100	3.94	15	0.59	1.8	4.0
	20	3/4	90	3.54	120	4.72	20	0.79	2.3	5.1
	25	1	120	4.72	170	6.69	25	0.98	5.8	12.8
	32	1 1/4	142	5.59	200	7.87	32	1.26	7.1	15.7
	40	1 1/2	142	5.59	200	7.87	40	1.57	6.9	15.2
	50	2	170	6.69	240	7.87	50	1.97	14.4	-

(1) A105 also Available with 0.25% Maximum Carbon.

Y-STRAINER VALVES CLASS 150,300&600

FORGED STEEL Y-STRAINER VALVES
FLANGE TYPE

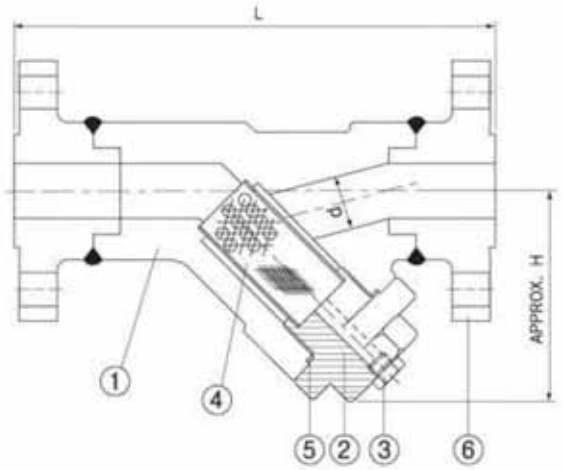

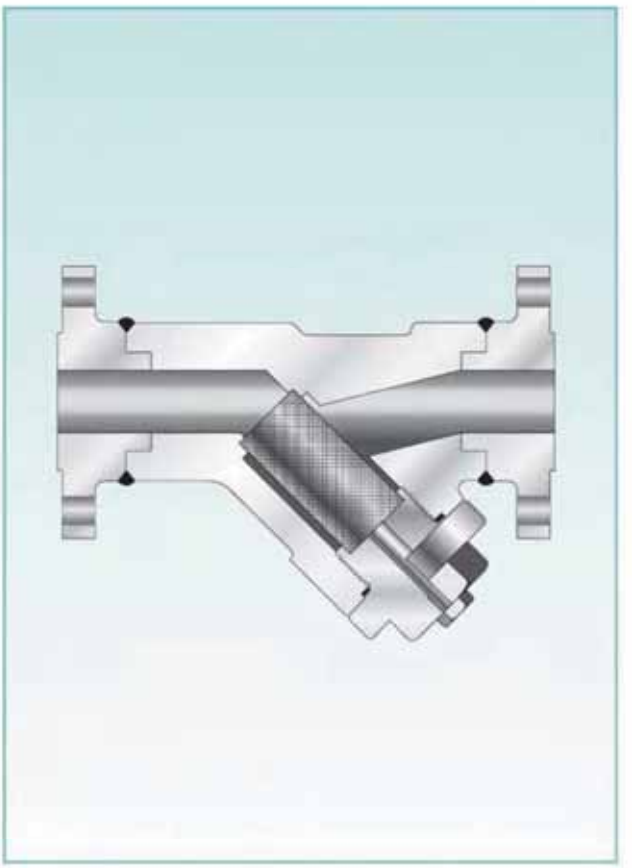

PARTS NOMENCLATURE

Part	Part Name	Qty	Materials		
1	Body	1	A105(1)	F304	F316
2	Cover	1	A105(1)	F304	F316
3	Plug	1	A105	F304	F316
4	Screen	1	SUS304	SUS304	SUS316
5	Gasket	1	SUS304 + GRAPHITE	SUS304 + GRAPHITE	SUS316 + GRAPHITE
6	Flange	2	A105	F304	F316

DIMENSIONS & WEIGHTS

CLASS	Valve Size		Center to Top, Open H		End to End L		End to Hub Diameter d		Approx. Weight	
	DN	in	mm	in	mm	in	mm	in	kg	lb
150, 300 (10K,20K,30K)	15	1/2	84	3.30	178	7.01	15	0.59	-	-
	20	3/4	84	3.30	187	7.36	20	0.79	-	-
	25	1	90	3.54	209	8.22	25	0.98	-	-
	32	1 1/4	120	4.72	241	9.49	32	1.26	-	-
	40	1 1/2	120	4.72	241	9.49	40	1.57	-	-
	50	2	142	5.59	278	10.9	50	1.97	-	-
600 (40K)	15	1/2	84	3.30	180	7.09	15	0.59	-	-
	20	3/4	90	3.54	190	7.48	20	0.79	-	-
	25	1	106	4.17	216	8.50	25	0.98	-	-
	32	1 1/4	142	5.59	260	10.24	32	1.26	-	-
	40	1 1/2	142	5.59	260	10.24	40	1.57	-	-
	50	2	170	6.69	292	11.50	50	1.97	-	-

(1) A105 also Available with 0.25% Maximum Carbon.
Other Materials also Available on Application.

Y-STRAINER VALVES CLASS 600&1500

FORGED STEEL Y-STRAINER VALVES
BOLTED COVER

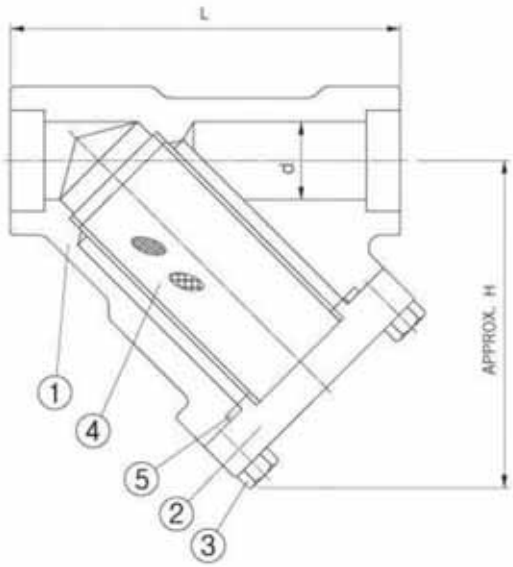

PARTS NOMENCLATURE

Part	Part Name	Qty	Materials		
1	Body	1	A105(1)	F304	F316
2	Cover	1	A105(1)	F304	F316
3	Cover Bolt	4	A1 93-B7	A193-B8	A193-B8
4	Screen	1	SUS304	SUS304	SUS316
5	Gasket	1	SUS304 + GRAPHITE	SUS304 + GRAPHITE	SUS316 + GRAPHITE

DIMENSIONS & WEIGHTS

CLASS	Valve Size		Center to Top, Open H		End to End L		End to Hub Diameter d		Approx. Weight	
	DN	in	mm	in	mm	in	mm	in	kg	lb
600	15	1/2	88	3.46	98	3.85	14	0.55	1.8	4.0
	20	3/4	88	3.46	98	3.85	19	0.74	1.7	3.7
	25	1	105	4.13	120	4.72	24	0.94	2.3	5.1
	32	1 1/4	123	4.84	140	5.51	32	1.26	5.8	12.8
	40	1 1/2	123	4.84	140	5.51	38	1.49	5.6	12.3
	50	2	142	5.59	170	6.69	49	1.92	6.7	14.8
1500	15	1/2	88	3.46	98	3.85	12	0.47	1.8	4.0
	20	3/4	105	4.13	120	4.72	16	0.62	2.3	5.1
	25	1	123	4.84	140	5.51	21	0.82	5.8	12.8
	32	1 1/4	123	4.84	140	5.51	29	1.14	7.1	15.7
	40	1 1/2	142	5.59	170	6.69	34	1.33	6.9	15.2
	50	2	170	6.69	240	7.87	43	1.69	14.4	-

(1) A105 also Available with 0.25% Maximum Carbon.
Other Materials also Available on Application.

Y-STRAINER VALVES CLASS 150,300&600

FORGED STEEL Y-STRAINER VALVES
BOLTED COVER FLANGE TYPE

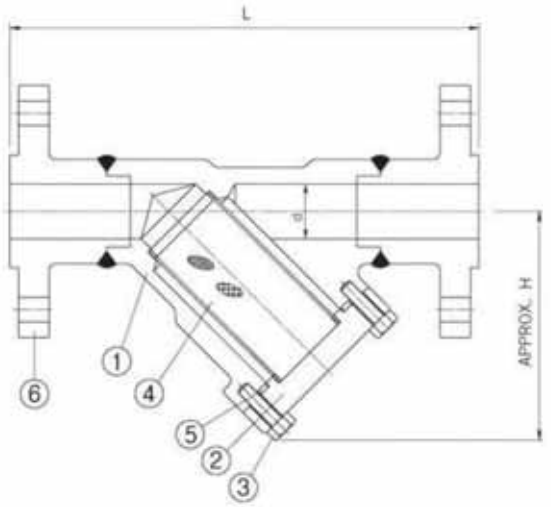

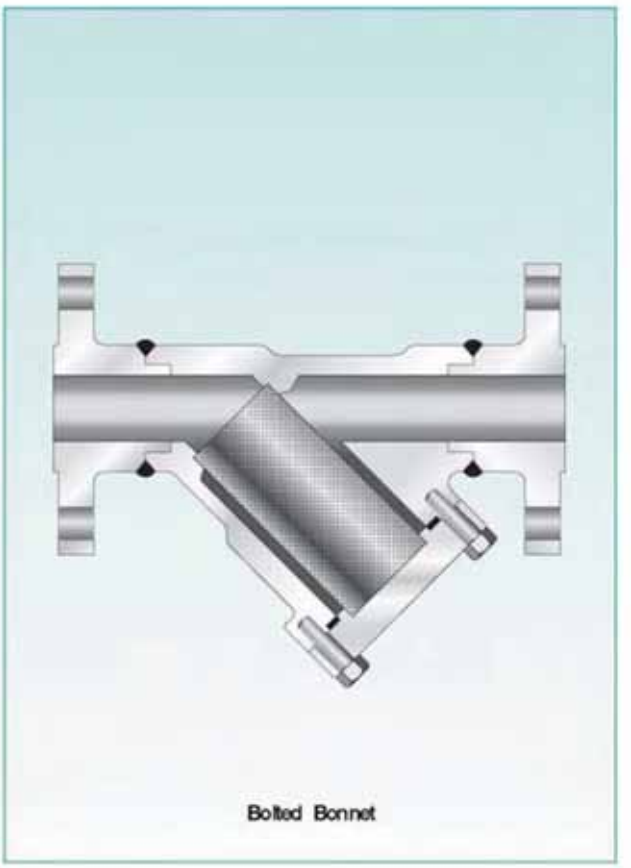

PARTS NOMENCLATURE

Part	Part Name	Qty	Materials		
1	Body	1	A105(1)	F304	F316
2	Cover	1	A105(1)	F304	F316
3	Cover Bolt	4	A193-B7	A19 3-B8	A193-B8
4	Screen	1	SUS304	SUS304	SUS316
5	Gasket	1	SUS304 + GRAPHITE	SUS304 + GRAPHITE	SUS316 + GRAPHITE
6	Flange	2	A105	F304	F316

DIMENSIONS & WEIGHTS

CLASS	Valve Size		Center to Top, Open H		End to End L		End to Hub Diameter d		Approx. Weight	
	DN	in	mm	in	mm	in	mm	in	kg	lb
150, 300 (10K,20K,30K)	15	1/2	88	3.46	178	7.01	15	0.59	-	-
	20	3/4	88	3.46	187	7.36	20	0.79	-	-
	25	1	105	4.13	209	8.22	25	0.98	-	-
	32	1 1/4	123	4.84	228	8.97	32	1.26	-	-
	40	1 1/2	123	4.84	228	8.97	40	1.57	-	-
	50	2	142	5.59	278	10.94	50	1.97	-	-
600 (40K)	15	1/2	88	3.46	180	7.09	15	0.59	-	-
	20	3/4	88	3.46	190	7.48	20	0.79	-	-
	25	1	105	4.13	216	8.50	25	0.98	-	-
	32	1 1/4	123	4.84	248	9.76	32	1.26	-	-
	40	1 1/2	123	4.84	248	9.76	40	1.57	-	-
	50	2	142	5.59	288	11.33	50	1.97	-	-

(1) A105 also Available with 0.25% Maximum Carbon.

TECHNICAL INFORMATION

- End Connections & Dimensions
- Flanged End Dimensions
- Tolerances
- Tolerance for Pipe Flangs
- Dimensions of End Connection
- Dimensions of Steel Pipes
- Flange Facing Finish
- Finish & Tolerance
- Comparison List for Casting & Forging
- Hydrostatic Test Pressures
- Pressure-Temperature Ratings
- Conversion Tables
- Corrosion Resistance Guide
- Reference Standard & Specification
- Guide to Storage, Installation & Service

END CONNECTIONS& DIMENSIONS

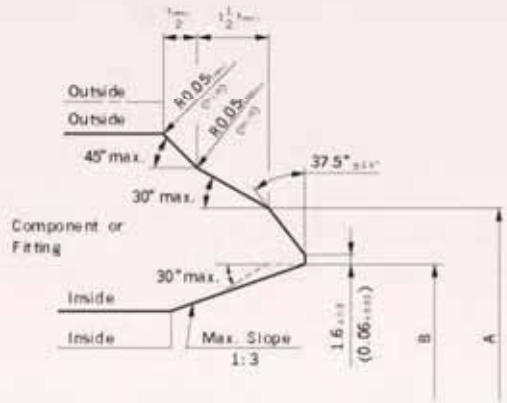

For nominal wall thicknesses 22mm(0.88 in.) & thinner (Without backing ring)

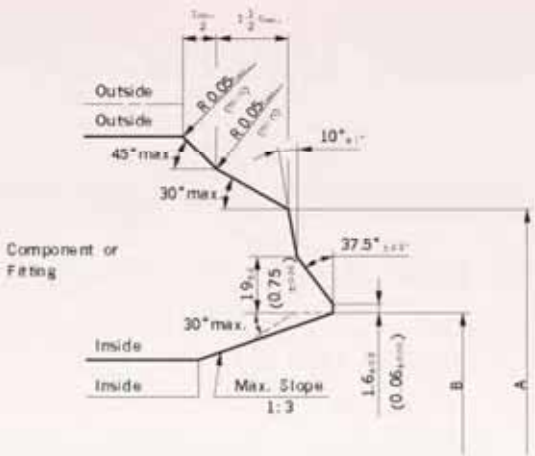

For nominal wall thicknesses greater than 22mm(0.88 in.) (Without backing ring)

BUTT WELDING END

DIMENSIONS (MILLIMETERS/INCHES)-ANSI B16.25

NPS	Pipe Schedule	Outside Dia. A		Inside Dia. B		Wall Thickness t	
		mm	in	mm	in	mm	in
1/2	40	21	0.84	16	0.622	2.77	0.109
	80			14	0.546	3.73	0.147
	160			12	0.464	4.78	0.188
	XXS			6	0.252	7.47	0.294
3/4	40	27	1.05	21	0.824	2.87	0.113
	80			19	0.742	3.91	0.154
	160			16	0.612	5.56	0.219
	XXS			11	0.434	7.82	0.308
1	40	33	1.32	27	1.049	3.38	0.133
	80			24	0.957	4.55	0.179
	160			21	0.815	6.36	0.250
	XXS			15	0.599	9.09	0.358
1 1/4	40	42	1.66	35	1.380	3.56	0.140
	80			32	1.278	4.85	0.191
	160			29	1.160	6.35	0.250
	XXS			23	0.896	9.70	0.382
1 1/2	40	48	1.90	41	1.610	3.68	0.145
	80			38	1.500	5.08	0.200
	160			34	1.388	7.14	0.281
	XXS			28	1.100	10.15	0.400

NPS	Pipe Schedule	Outside Dia. A		Inside Dia. B		Wall Thickness t	
		mm	in	mm	in	mm	in
2	40	60	2.38	53	2.067	3.91	0.154
	80			49	1.939	5.54	0.218
	160			43	1.687	8.74	0.344
	XXS			38	1.503	11.07	0.436
2 1/2	40	73	2.88	63	2.469	5.15	0.203
	80			59	2.323	7.00	0.276
	160			54	2.125	9.55	0.375
	XXS			45	1.771	14.00	0.552
3	40	89	3.50	78	3.068	5.50	0.216
	80			74	2.900	7.60	0.300
	160			67	2.624	11.15	0.438
	XXS			58	2.300	15.25	0.600
3 1/2	40	102	4.00	90	3.548	5.75	0.226
	80			85	3.364	8.10	0.318
4	40			102	4.026	6.00	0.237
	80			97	3.826	8.55	0.337
	120			92	3.624	11.15	0.438
	160			87	3.438	13.50	0.531
	XXS			80	3.152	17.10	0.674

Note:When ordering butt welding ends, indicate type of ends and pipe schedule to be used.

END CONNECTIONS& DIMENSIONS

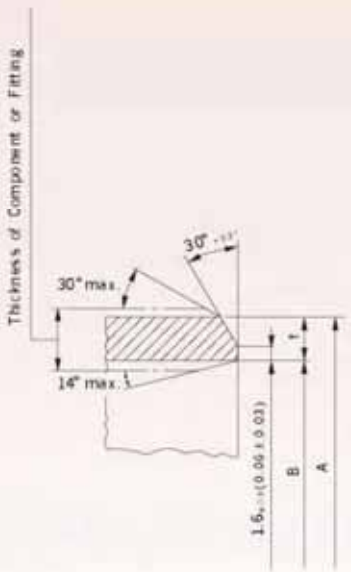

For nominal wall thicknesses
22mm(0.88 in.) & thinner

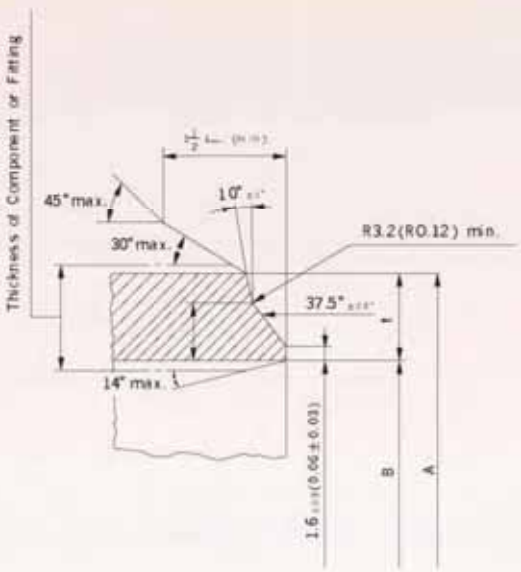

For nominal wall thicknesses
greater than 22mm(0.88 in.)

BUTT WELDING END

DIMENSIONS (MILLIMETERS/INCHES)- JIS B2312

NPS	Pipe Schedule	Outside Dia. A		Inside Dia. B		Wall Thickness t	
		mm	in	mm	in	mm	in
1/2	40	21.7	0.85	16.1	0.63	2.8	0.11
	80			3.7	0.15		
	160			12.3	0.48	4.7	0.19
3/4	40	27.2	1.07	21.4	0.84	2.9	0.11
	80			19.4	0.76	3.9	0.15
	160			16.2	0.64	5.5	0.22
1	40	34.0	1.34	27.2	1.07	3.4	0.13
	80			25.0	0.98	4.5	0.18
	160			21.2	0.83	6.4	0.25
1 1/4	40	42.7	1.68	35.5	1.40	3.6	0.14
	80			32.9	1.30	4.9	0.19
	160			29.9	1.18	6.4	0.25
1 1/2	40	48.6	1.91	41.2	1.62	3.7	0.15
	80			38.4	1.51	5.1	0.20
	160			34.4	1.35	7.1	0.28

NPS	Pipe Schedule	Outside Dia. A		Inside Dia. B		Wall Thickness t	
		mm	in	mm	in	mm	in
2	40	60.5	2.38	52.7	2.07	3.9	0.15
	80			49.5	1.95	5.5	0.22
	160			43.1	1.70	8.7	0.34
2 1/2	40	76.3	3.00	65.9	2.59	5.2	0.20
	80			62.3	2.45	7.0	0.28
	160			57.3	2.26	9.5	0.37
3	40	89.1	3.51	78.1	3.07	5.5	0.22
	80			73.9	2.91	7.6	0.30
	160			66.9	2.63	11.1	0.44
3 1/2	40	101.6	4.00	90.2	3.55	5.7	0.22
	80			85.4	3.36	8.1	0.32
	160			76.2	3.00	12.7	0.50
4	40	114.3	4.50	102.3	4.03	6.0	0.24
	80			97.1	3.82	8.6	0.34
	160			87.3	3.44	13.5	0.53

Note:When ordering butt welding ends, indicate type of ends and pipe schedule to be used.

FLANGED END DIMENSIONS

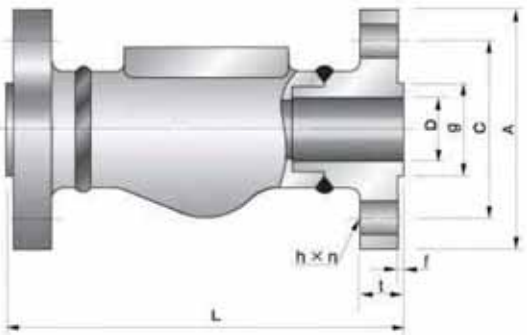

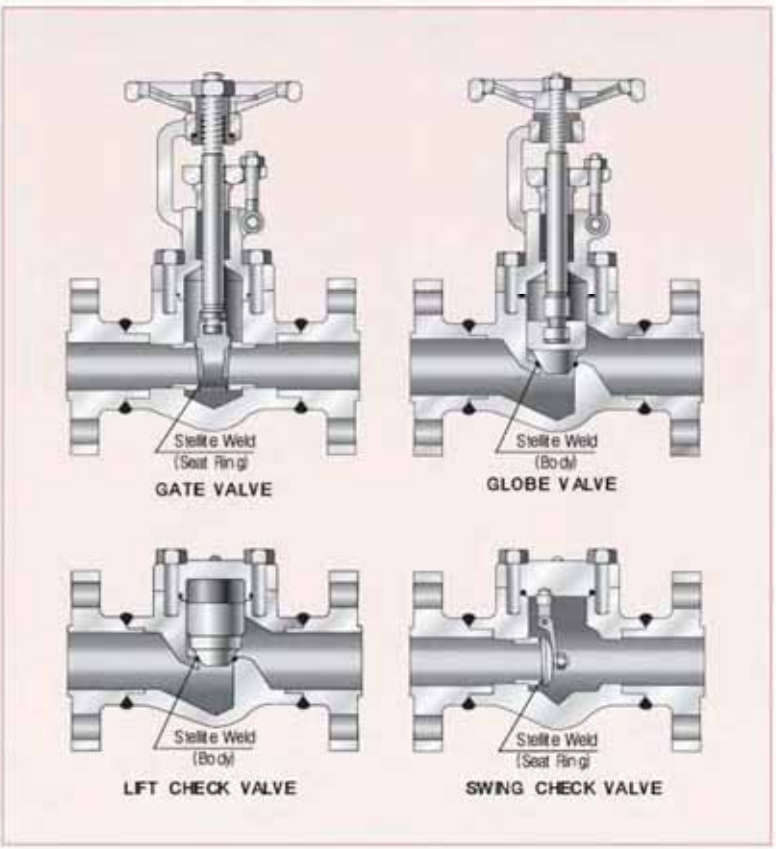

JIS STANDARD

(Unit: mm)

DIMENSIONS (JIS B 2210)													
Pressure Rating	Valve Size		L			D	A	C	g	t	f	h	Number of Bolts n
	DN	In.	Gate	Globe L/Check	Swing Check								
10Kg/cm²	15	1/2	108	108		15	95	70	51	12	1	15	4
	20	3/4	117	117		20	100	75	56	14		15	
	25	1	127	127		25	125	90	67	14		19	
	32	1 1/4	140	140		32	135	100	76	16	2	19	
	40	1 1/2	165	165		40	140	105	81	16		19	
	50	2	178	203		50	155	120	96	16		19	
20Kg/cm²	15	1/2	140	152		15	95	70	51	14	1	15	4
	20	3/4	152	178		20	100	75	56	16		15	
	25	1	165	203		25	125	90	67	16		19	
	32	1 1/4	178	216		32	135	100	76	18	2	19	
	40	1 1/2	190	229		40	140	105	81	18		19	
	50	2	216	267		50	155	120	96	18		19	8
30Kg/cm²	15	1/2	140	152		15	115	80	55	18	1	19	4
	20	3/4	152	178		20	120	85	60	18		19	
	25	1	165	203		25	130	95	70	20		19	
	32	1 1/4	178	216		32	140	105	80	22	2	19	
	40	1 1/2	190	229		40	160	120	90	22		23	
	50	2	216	267		50	165	130	105	22		19	8
40Kg/cm²	15	1/2	165	165		15	115	80	55	20	1	19	4
	20	3/4	190	190		20	120	85	60	20		19	
	25	1	216	216		25	130	95	70	22		19	
	32	1 1/4	229	229		32	140	105	80	24	2	19	
	40	1 1/2	241	241		40	160	120	90	24		23	
	50	2	292	292		50	165	130	105	26		19	8
63Kg/cm²	15	1/2	216	216		15	120	85	55	23	1	19	4
	20	3/4	229	229		20	135	95	60	25		23	
	25	1	254	254		25	140	100	70	27		23	
	32	1 1/4	279	279		32	150	110	80	30	2	23	
	40	1 1/2	305	305		40	175	130	90	32		25	
	50	2	368	368		50	185	145	105	34		23	8

INTEGRAL FLANGED END DIMENSIONS

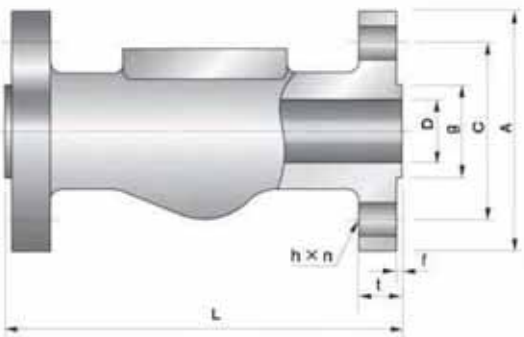

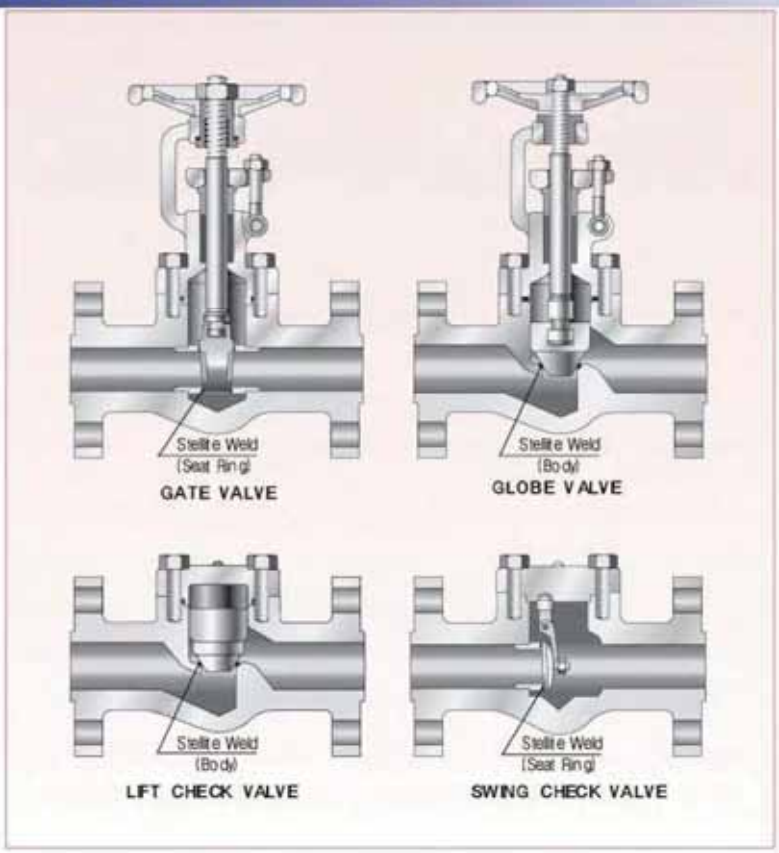

JIS STANDARD

(Unit: mm)

DIMENSIONS (JIS B 2210)													
Pressure Rating	Valve Size		L			D	A	C	g	t	f	h	Number of Bolts n
	DN	In.	Gate	Globe L/Check*	Swing Check								
10Kg/cm²	15	1/2	108	108		15	95	70	51	12	1	15	4
	20	3/4	117	117		20	100	75	56	14		15	
	25	1	127	127		25	125	90	67	14		19	
	32	1 1/4	140	140		32	135	100	76	16	2	19	
	40	1 1/2	165	165		40	140	105	81	16		19	
	50	2	178	203		50	155	120	96	16		19	
20Kg/cm²	15	1/2	140	152		15	95	70	51	14	1	15	4
	20	3/4	152	178		20	100	75	56	16		15	
	25	1	165	203		25	125	90	67	16		19	
	32	1 1/4	178	216		32	135	100	76	18	2	19	
	40	1 1/2	190	229		40	140	105	81	18		19	
	50	2	216	267		50	155	120	96	18		19	8
30Kg/cm²	15	1/2	140	152		15	115	80	55	18	1	19	4
	20	3/4	152	178		20	120	85	60	18		19	
	25	1	165	203		25	130	95	70	20		19	
	32	1 1/4	178	216		32	140	105	80	22	2	19	
	40	1 1/2	190	229		40	160	120	90	22		23	
	50	2	216	267		50	165	130	105	22		19	8
40Kg/cm²	15	1/2	165	165		15	115	80	55	20	1	19	4
	20	3/4	190	190		20	120	85	60	20		19	
	25	1	216	216		25	130	95	70	22		19	
	32	1 1/4	229	229		32	140	105	80	24	2	19	
	40	1 1/2	241	241		40	160	120	90	24		23	
	50	2	292	292		50	165	130	105	26		19	8
63Kg/cm²	15	1/2	216	216		15	120	85	55	23	1	19	4
	20	3/4	229	229		20	135	95	60	25		23	
	25	1	254	254		25	140	100	70	27		23	
	32	1 1/4	279	279		32	150	110	80	30	2	23	
	40	1 1/2	305	305		40	175	130	90	32		25	
	50	2	368	368		50	185	145	105	34		23	8

FLANGED END DIMENSIONS

ANSI STANDARD

(Unit: mm / in)

Pressure Rating	Valve Size		DIMENSIONS (ANSI B 16.5 & B 16.10)																						
			L						D		A		C		g		t		f		h		Number of Bolts n
			Gate		Globe		Swing																
	DN	in.	mm	in	mm	in	mm	in	mm	in	mm	in	mm	in	mm	in	mm	in	mm	in	mm	in	
150 Lb/in ²	15	1/2	108	4.25	108	4.25	108	4.25	15	0.67	89	3.50	60.3	2.38	34.9	1.38	11.2	0.44	1.6	0.06	16	0.62	4
	20	3/4	117	4.62	117	4.62	117	4.62	20	0.91	98	3.88	69.9	2.75	42.9	1.69	12.7	0.50			16	0.62	
	25	1	127	5.00	127	5.00	127	5.00	25	1.14	108	4.25	79.4	3.12	50.8	2.00	14.2	0.56			16	0.62	
	32	1 1/4	140	5.50	140	5.50	140	5.50	32	1.38	117	4.62	88.9	3.50	63.5	2.50	15.7	0.62			16	0.62	
	40	1 1/2	165	6.50	165	6.50	165	6.50	40	1.57	127	5.00	98.4	3.88	73.0	2.88	17.5	0.69			16	0.62	
	50	2	178	7.00	203	8.00	203	8.00	50	2.05	152	6.00	120.6	4.75	92.1	3.62	19.1	0.75			19	0.75	
300 Lb/in ²	15	1/2	140	5.50	152	6.00	152	6.00	15	0.67	95	3.75	66.7	2.62	Same As Class 150		14.2	0.56	1.6	0.06	16	0.62	4
	20	3/4	152	6.00	178	7.00	178	7.00	20	0.91	117	4.62	82.5	3.25			15.7	0.62			19	0.75	
	25	1	165	6.50	203	8.00	203	8.00	25	1.14	124	4.88	88.9	3.50			17.5	0.69			19	0.75	
	32	1 1/4	178	7.00	216	8.50	216	8.50	32	1.38	133	5.25	98.4	3.88			19.1	0.75			19	0.75	
	40	1 1/2	190	7.50	229	9.00	229	9.00	40	1.57	156	6.12	114.3	4.50			20.6	0.81			22	0.88	
	50	2	216	8.50	267	10.50	267	10.50	50	2.05	165	6.50	127.0	5.00			22.4	0.88			19	0.75	8
600 Lb/in ²	15	1/2	165	6.50	Same As Gate				Same As Class 300						Same As Class 150		20.6	0.81	6.4	0.25	Same As Class 300		
	20	3/4	190	7.50													22.1	0.87					
	25	1	216	8.50													23.9	0.94					
	32	1 1/4	229	9.00													26.9	1.06					
	40	1 1/2	241	9.50													28.8	1.13					
	50	2	292	11.50													31.8	1.25					
900 Lb/in ²	15	1/2	216	8.50	Same As Gate				15	0.67	121	4.75	82.5	3.25	Same As Class 150		28.8	1.13	6.4	0.25	22	0.88	4
	20	3/4	229	9.00					20	0.91	130	5.12	88.7	3.50			31.8	1.25			22	0.88	
	25	1	254	10					25	1.14	149	5.88	101.6	4.00			34.8	1.37			25	1.00	
	32	1 1/4	279	11.00					32	1.38	159	6.25	111.3	4.38			34.8	1.37			25	1.00	
	40	1 1/2	305	12.0					40	1.57	178	7.00	124.0	4.88			38.1	1.50			29	1.12	
	50	2	368	14.5					50	2.05	216	8.50	165.1	6.50			44.5	1.75			25	1.00	8
1500 Lb/in ²	15	1/2	216	8.50	Same As Gate				15	0.67	121	4.75	82.5	3.25	Same As Class 150		28.8	1.13	6.4	0.25	22	0.88	4
	20	3/4	229	9.00					20	0.91	130	5.12	88.9	3.50			31.8	1.25			22	0.88	
	25	1	254	10					25	1.14	149	5.88	101.6	4.00			34.8	1.37			25	1.00	
	32	1 1/4	279	11.00					32	1.38	159	6.25	111.3	4.38			34.8	1.37			25	1.00	
	40	1 1/2	305	12.0					40	1.57	178	7.00	124	4.88			38.1	1.50			29	1.12	
	50	2	368	14.5					50	2.05	216	8.50	165.1	6.5			44.5	1.75			25	1.00	8
2500 Lb/in ²	15	1/2	264	10.38	Same As Gate				15	0.67	133	5.25	88.9	3.5	Same As Class 150		36.6	1.44	6.4	0.25	22	0.88	4
	20	3/4	273	10.75					20	0.91	140	5.50	95.2	3.75			38.1	1.50			22	0.88	
	25	1	308	12.12					25	1.14	159	6.25	107.9	4.25			41.4	1.63			25	1.00	
	32	1 1/4	349	13.75					32	1.38	184	7.25	130.2	5.12			44.5	1.75			29	1.12	
	40	1 1/2	384	15.12					40	1.57	203	8.00	146.0	5.75			50.8	2.00			32	1.25	
	50	2	451	17.75					50	2.05	235	9.25	171.4	6.75			57.2	2.25			29	1.12	8

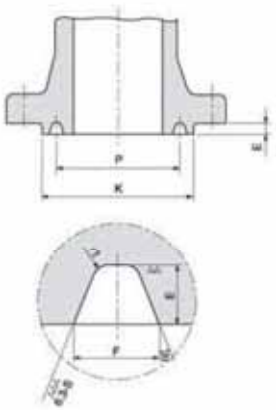

RING JOINT

PN/ Class	VALVE SIZE		Dia of Raised Face for Ring Joint	Ring No.	Pitch Dia. of Ring Groove	RTJ TYPE		
						Depth of Groove	Width of Groove	Radius of Groove
	DN	in.	K	P	(mm)	E	F	r1
20/150	15	1/2	-	-	-	-	-	-
	20	3/4	-	-	-	-	-	-
	25	1	63.5	47.62	R15	6.35	8.74	0.8
	32	1 1/4	73.0	57.15	R17	6.35	8.74	0.8
	40	1 1/2	82.5	69.07	R19	6.35	8.74	0.8
	50	2	102	82.55	R22	6.35	8.74	0.8
50/300	15	1/2	51.0	34.14	R11	5.56	7.14	0.8
	20	3/4	63.5	42.88	R13	6.35	8.74	0.8
	25	1	70.0	50.80	R16	6.35	8.74	0.8
	32	1 1/4	79.5	60.32	R18	6.35	8.74	0.8
	40	1 1/2	90.5	68.28	R20	6.35	8.74	0.8
	50	2	108	82.55	R23	7.92	11.91	0.8
100/600	15	1/2	51.0	34.14	R11	5.56	7.14	0.8
	20	3/4	63.5	42.88	R13	6.35	8.74	0.8
	25	1	70.0	50.80	R16	6.35	8.74	0.8
	32	1 1/4	79.5	60.32	R18	6.35	8.74	0.8
	40	1 1/2	90.5	68.28	R20	6.35	8.74	0.8
	50	2	108	82.55	R23	7.92	11.91	0.8
150/900	15	1/2	60.5	39.67	R12	6.35	8.74	0.8
	20	3/4	66.5	44.45	R14	6.35	8.74	0.8
	25	1	71.5	50.80	R16	6.35	8.74	0.8
	32	1 1/4	81.0	60.32	R18	6.35	8.74	0.8
	40	1 1/2	92.0	68.28	R20	6.35	8.74	0.8
	50	2	124	95.25	R24	7.92	11.91	0.8
250/1500	15	1/2	60.5	39.67	R12	6.35	8.74	0.8
	20	3/4	66.5	44.45	R14	6.35	8.74	0.8
	25	1	71.5	50.80	R16	6.35	8.74	0.8
	32	1 1/4	81.0	60.32	R18	6.35	8.74	0.8
	40	1 1/2	92.0	68.28	R20	6.35	8.74	0.8
	50	2	124	95.25	R24	7.92	11.91	0.8
420/2500	15	1/2	60.5	42.88	R13	6.35	8.74	0.8
	20	3/4	73.0	50.80	R16	6.35	8.74	0.8
	25	1	82.5	60.32	R18	6.35	8.74	0.8
	32	1 1/4	102	72.24	R21	7.92	11.91	0.8
	40	1 1/2	114	82.55	R23	7.92	11.91	0.8
	50	2	133	101.6	R26	7.92	11.91	0.8

FLANGED END DIMENSIONS

The table covers flanges conforming to pressure classes PN6-PN400 for valves, as well as matching pipe flanges.
Pressure classes with the same colour coding have the same flange diameter, drilling and number of holes, but the flange thicknesses differ in certain cases.

DIN STANDARD

(Unit: mm / in)

DIMENSIONS (SS, DIN, BS 4504 and EN 558-1)												
Pressure Rating	Valve Size	L		D		C		T		h		Number of Bolts n
		mm	in	mm	in	mm	in	mm	in	mm	in	
PN6	10	130	5.11	75	2.95	50	1.96	12	0.47	11	0.43	4
		210	8.26									
	15	130	5.11	80	3.14	55	2.16	12	0.47	11	0.43	
		210	8.26									
	20	150	5.90	90	3.54	65	2.55	14	0.55	11	0.43	
		230	9.05									
	25	160	6.29	100	3.93	75	2.95	14	0.55	11	0.55	
		230	9.05									
	32	180	7.08	120	4.72	90	3.54	14	0.55	14	0.55	
		260	10.2									
	40	200	7.87	130	5.11	100	3.93	14	0.55	14	0.55	
		260	10.2									
	50	250	9.84	140	5.51	110	4.43	14	0.55	14	0.55	
		300	11.8									
PN10	10	same as class 6		90	3.54	60	2.36	14	0.55	14	0.55	4
	15			95	3.74	65	2.55	14	0.55	14	0.55	
	20			105	4.13	75	2.95	16	0.62	14	0.55	
	25			115	4.52	85	3.34	16	0.62	14	0.55	
	32			140	5.51	100	3.93	16	0.62	18	0.70	
	40			150	5.90	110	4.43	16	0.62	18	0.70	
	50			165	6.49	125	4.92	18	0.70	18	0.70	
PN16	10	same as class 6		90	3.54	60	2.36	14	0.55	14	0.55	4
	15			95	3.74	65	2.55	14	0.55	14	0.55	
	20			105	4.13	75	2.95	16	0.62	14	0.55	
	25			115	4.52	85	3.34	16	0.62	14	0.55	
	32			140	5.51	100	3.93	16	0.62	18	0.70	
	40			150	5.90	110	4.43	16	0.62	18	0.70	
	50			165	6.49	125	4.92	18	0.70	18	0.70	
PN25	10	same as class 6		90	3.54	60	2.36	16	0.62	14	0.55	4
	15			95	3.74	65	2.55	16	0.62	14	0.55	
	20			105	4.13	75	2.95	18	0.70	14	0.55	
	25			115	4.52	85	3.34	18	0.70	14	0.55	
	32			140	5.51	100	3.93	18	0.70	18	0.70	
	40			150	5.90	110	4.43	18	0.70	18	0.70	
	50			165	6.49	125	4.92	20	0.78	18	0.70	
PN40	10	same as class 6		90	3.54	60	2.36	16	0.62	14	0.55	4
	15			95	3.74	65	2.55	16	0.62	14	0.55	
	20			105	4.13	75	2.95	18	0.70	14	0.55	
	25			115	4.52	85	3.34	18	0.70	14	0.55	
	32			140	5.51	100	3.93	18	0.70	18	0.70	
	40			150	5.90	110	4.43	18	0.70	18	0.70	
	50			165	6.49	125	4.92	20	0.78	18	0.70	

FLANGED END DIMENSIONS

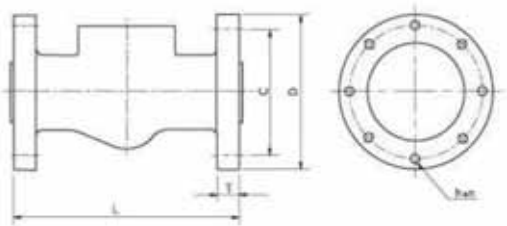

Bolt hole positions and numbers of holes according to SS 335 and DIN 2508

DIN STANDARD

(Unit: mm / in)

DIMENSIONS (SS, DIN, BS 4504 and EN 558-1)												
Pressure Rating	Valve Size	L		D		C		T		h		Number of Bolts
		mm	in	mm	in	mm	in	mm	in	mm	in	n
PN64	10	130	5.11	100	3.93	70	2.75	20	0.78	14	0.55	4
		210	8.26									
	15	130	5.11	105	4.13	75	2.95	20	0.78	14	0.55	
		210	8.26									
	20	150	5.90									
		230	9.05									
	25	160	6.29	140	5.51	100	3.93	24	0.94	18	0.70	
		230	9.05									
	32	180	7.08	155	6.10	110	4.43	24	0.94	22	0.86	
		260	10.2									
	40	200	7.87	170	6.69	125	4.92	26	1.02	22	0.86	
		260	10.2									
	50	250	9.84	180	7.08	135	5.31	28	1.10	22	0.86	
		300	11.8									
PN100	10	same as class 64		100	3.93	70	2.75	20	0.78	14	0.55	4
	15			105	4.13	75	2.95	20	0.78	14	0.55	
	20											
	25			140	5.51	100	3.93	24	0.94	18	0.70	
	32			155	6.10	110	4.33	24	0.94	22	0.86	
	40			170	6.69	125	4.92	26	1.02	22	0.86	
	50			195	7.67	145	5.70	28	1.10	26	1.02	
PN160	10	same as class 64		100	3.93	70	2.75	20	0.78	14	0.55	4
	15			105	4.13	75	2.95	20	0.78	14	0.55	
	20											
	25			140	5.51	100	3.93	24	0.94	18	0.70	
	32											
	40			170	6.69	125	4.92	28	1.10	22	0.86	
	50			195	7.67	145	5.70	30	1.18	26	1.02	
PN250	10	same as class 64		125	4.92	85	3.34	24	0.94	18	0.70	4
	15			130	5.11	90	3.54	26	1.02	18	0.70	
	20											
	25			150	5.90	105	4.13	28	1.10	22	0.86	
	32											
	40			185	7.28	135	5.31	34	1.33	26	1.02	
	50			200	7.87	150	5.90	38	1.49	26	1.02	8
PN400	10	same as class 64		125	4.92	85	3.34	18	0.70	18	0.70	4
	15			145	5.70	100	3.93	22	0.86	22	0.86	
	20											
	25			180	7.08	130	5.11	26	1.02	26	1.02	
	32											
	40			220	8.66	165	6.49	30	1.18	30	1.18	
	50			235	9.25	180	7.08	30	1.18	30	1.18	8

TOLERANCES ANSI B16.5 Forged Flanges

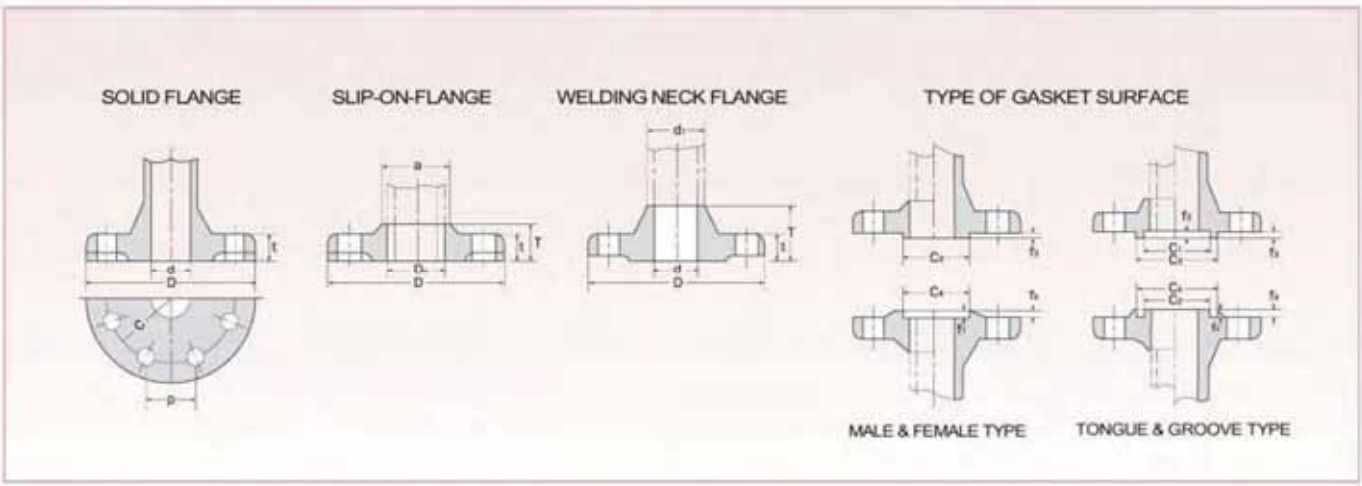

THREAD, SOCKET-WELDING, SLIP-ON, LAP JOINT AND BLIND

Outside Diameter	When O.D. is 24" or less	±1/16"(1.6mm)*
	When O.D. is Over 24"	±1/8"(3.2mm)*
Inside Diameter	Threaded	Within limits on boring gauge
	Socket-welding. Slip-on and Lap joint	10" & Smaller + 1/32"(0.8mm), -0 12" & Larger + 1/16"(1.6mm), -0
Outside Diameter of Hub	5" and Smaller	+ 3/32"(2.4mm)* - 1/32"(0.8mm)
	6" and Larger	+ 5/32"(4.0mm) - 1/32"(0.8mm)
Diameter of Contact Face	1/16" Raised Face	± 1/32"(0.8mm)
	1/4" Raised Face Tongue & Globe Male. Female	± 1/64"(0.4mm)
Diameter of Counter bore	Same as for Inside Diameter	
Drilling	Bolt Circle	± 1/16"(1.6mm)
	Bolt Hole Spacing	±1/32"(0.8mm)
	Eccentricity of Bolt Circle with Respect to Facing	2 1/2" Smaller 1/32"(0.8mm) Max. 3" & Larger 1/16"(1.6mm) Max.
	Eccentricity of Bolt Circle with Respect to Bore	1/32"(0.8mm) Max.
	Eccentricity of Bolt Circle with Respect to Bore	1/32"(0.8mm) Max.
Thickness	18" and Smaller	+ 1/8"(3.2mm), -0
	20" and Larger	+ 3/16"(4.8mm), -0
Length Thru Hub	10" and Smaller	± 1/16"(1.6mm)
	12" and Larger	±1/8"(3.2mm)

Note:*This tolerance is not covered in ANSI B16.5. but maker's option.

WELDING NECK

Outside Diameter	When O.D. is 24" or less	±1/16"(1.6mm)*
	When O.D. is Over 24"	±1/8"(3.2mm)
Inside Diameter	10" and Smaller	± 1/32"(0.8mm)
	12" thru 18"	± 1/16"(1.6mm)
	20" and Larger	+1/8"(3.2mm) - 1/16"(1.6mm)
Diameter of Contact Face	1/16" Raised Face	± 1/32"(0.8mm)
	1/4" Raised Face Tongue & Globe Male. Female	± 1/64"(0.4mm)
Diameter of Hub at Base	When Hub Base is 24" or Smaller	± 1/16"(1.6mm)*
	When Hub Base is Over 24"	± 1/8"(3.2mm)*
Diameter of Hub at Point of Welding	5" and Smaller	+ 3/32"(2.4mm) - 1/32"(0.8mm)
	6" and Larger	+ 5/32"(4.0mm) - 1/32"(0.8mm)
Drilling	Bolt Circle	± 1/16"(1.6mm)
	Bolt Hole Spacing	± 1/32"(0.8mm)
	Eccentricity of Bolt Circle with Respect to Facing	2 1/2" Smaller 1/32"(0.8mm) Max. 3" & Larger 1/16"(1.6mm) Max.
	Eccentricity of Bolt Circle with Respect to Bore	1/32"(0.8mm) Max.*
	Eccentricity of Bolt Circle with Respect to Bore	1/32"(0.8mm) Max.*
Thickness	18" and Smaller	+ 1/8"(3.2mm), -0
	20" and Larger	+ 3/16"(4.8mm), -0
Length Thru Hub	10" and Smaller	± 1/16"(1.6mm)
	12" and Larger	±1/8"(3.2mm)

TOLERANCES FOR PIPE FLANGES

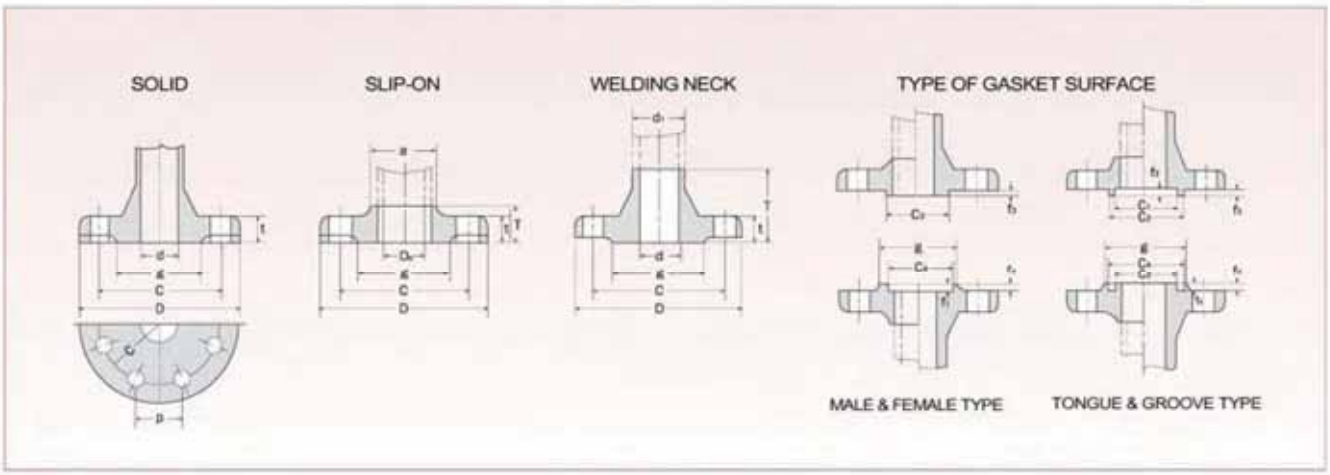

(Unit: mm)

Flange Section		Surface Condition	Basic Size	Dimensional Tolerance
Outside Dia D		As Forged (1)	300 & below	+Not Specified -2.0
			over 300 thru 600	
			over 600 thru 1000	
			over 1000 thru 1500	+Not Specified -3.0
			over 1500	
		Finish	300 & below	±1
			over 300 thru 600	±1.5
			over 600 thru 1000	±2
			over 1000 thru 1500	±2.5
			over 1500	±3
Inside Dia D	Solid Flange d(2)	As Forged (1)	16 & below	±1
			over 16 thru 63	±1.5
			over 63 thru 125	±2
			over 125 thru 150	±2.5
			over 250 thru 500	±3
			over 500 thru 1000	±4
			over 1000	±5
	Slip-on Flange do	Finish	100 & below	$^{+0.5}_{0}$
			over 100 thru 400	$^{+1}_{0}$
			over 400 thru 600	$^{+1.5}_{0}$
			over 600 thru 800	$^{+2}_{0}$
			over 800 thru 1000	$^{+2.5}_{0}$
			over 1000	$^{+3}_{0}$
	Welding Neck Flange d		100 & below	$^{0}_{-0.5}$
			over 100 thru 400	$^{0}_{-1}$
			over 400 thru 600	$^{0}_{-1.5}$
			over 600 thru 800	$^{0}_{-2}$
			over 800 thru 1000	$^{0}_{-2.5}$
			over 1000	$^{0}_{-3}$
Bolt Hole	Bolt Circle Dia. C		2500 & below	±0.5
			over 250 thru 550	±0.6
			over 550 thru 950	±0.8
			over 950 thru 1350	±1
			over 1350	±1.5

Flange Section		Surface Condition	Basic Size	Dimensional Tolerance
Bolt Hole	Pitch of Hole p	Drilling Hole	-	±0.5
Dia. of Hub	Slip-on Flange (a) and Welding Neck Flange (d_1)	As Forged	220 & below	$^{+2}_{0}$
			over 220 thru 450	$^{+3}_{0}$
			over 450 thru 650	$^{+4}_{0}$
			over 650 thru 850	$^{+6}_{0}$
			over 850 thru 1000	$^{+7}_{0}$
			over 1000	$^{+8}_{0}$
		Finish	220 & below	$^{+1}_{0}$
			over 220 thru 450	$^{+1.5}_{0}$
			over 450 thru 650	$^{+2}_{0}$
			over 650 thru 850	$^{+2.5}_{0}$
			over 850 thru 1000	$^{+3}_{0}$
			over 1000	$^{+3.5}_{0}$
Gasket Seat	C1, C2 C3, C4	Finish	500 & below	±0.3
			over 500 thru 1000	±0.35
			over 1000 thru 1500	±0.4
			over 1500	±0.5
	f/f_1	Finish	8 & below	±0.2
			over 8	±0.25
	g	Finish	200 & below	±0.8
			over 200 thru 650	±0.9
			over 650 thru 1000	±1
			ever 1000	±1.2
Thickness t		One-side Finish	20 & below	$^{+1.5}_{0}$
			over 20 thru 50	$^{+2}_{0}$
			over 50 thru 100	$^{+3}_{0}$
		Both-side Finish	20 & below	$^{+1}_{0}$
			over 20 thru 50	$^{+1.5}_{0}$
			over 50 thru 100	$^{+2}_{0}$
Hub Height T	Flange with Pipe inserted	Finish	50 & below	±1
			over 50 thru 100	±1.5
			over 100 thru 200	±2
	Flange with Butt-welded Pipe	Finish	over 200 & below	$^{+2}_{0}$
			over 200 thru 300	$^{+3}_{0}$

Note

(1) This dimensional tolerance applies to the machined surface, as required.

(2) This dimension "d" has been specified only for the flange, of which the bore part is cylindrical in shape.

Remarks

(1) The dimensions "d" of bore part of the solid flanges with surface, as forged of valves, pumps, etc. are allowed up to plus 100% of the above dimensional tolerance. Provided that the required thickness shall be free from its influence.

(2) The thickness of flange of valve and the like, of which the dimension between flange faces is limited to a fixed value, are all owed up to plus 100% of the above dimensional tolerance in the column of thickness.

(3) In the case of spot facing of the single surface finishing, the thickness of spot facing is allowed up to 70% of the dimensional t olerance in the above column of thickness in negative side.

(4) The chain double-dashed lines in the figures of solid flange and socket welding type flange illustrate the cases of large r aised face flange.

DIMENSIONS OF END CONNECTION

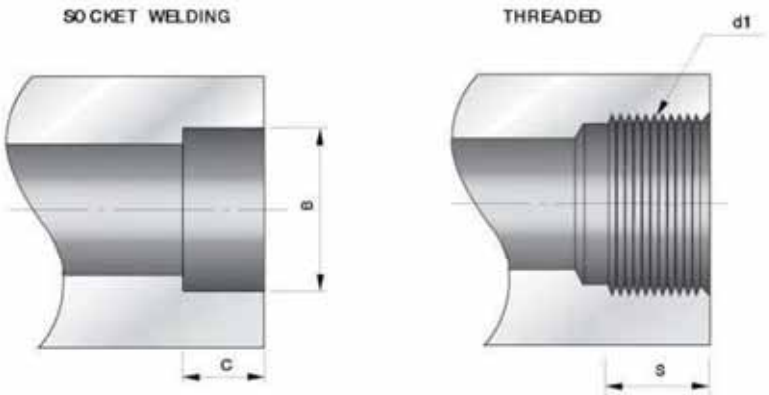

SOCKET WELDING

Unit :mm(inch)

Valve size		ANSI B 16.11						JIS B 2316					
		B				Min.C		B				Min.C	
		Min.		Max.				Min.		Max.			
DN	in	mm	in	mm	in	mm	in	mm	in	mm	in	mm	in
8	1/4	14.10	0.555	14.35	0.565	10	0.38	14.3	0.56	14.6	0.57	10	0.38
10	3/8	17.55	0.690	17.80	0.700	10	0.38	17.8	0.70	18.1	0.71	10	0.38
15	1/2	21.70	0.855	21.95	0.865	10	0.38	22.2	0.87	22.5	0.89	10	0.38
20	3/4	27.05	1.065	27.30	1.075	13	0.50	27.7	1.09	28.0	1.10	13	0.50
25	1	33.80	1.330	34.05	1.340	13	0.50	34.5	1.36	34.8	1.37	13	0.50
32	1 1/4	42.55	1.675	42.80	1.685	13	0.50	43.2	1.70	43.5	1.71	13	0.50
40	1 1/2	48.65	1.915	48.90	1.925	13	0.50	49.1	1.93	49.4	1.94	13	0.50
50	2	61.10	2.406	61.35	2.416	16	0.62	61.1	2.41	61.4	2.42	16	0.62

THREADED

Unit :mm(inch)

Valve size		ANSI B 16.11 / B1. 20.1			JIS B 0203		
		Thread, Min. S		Thread, d1	Thread, Min. S		Thread, d1
DN	in	mm	in.		mm.	in.	
8	1/4	10.0	0.4018	1/4-18NPT	9.4	0.37	PT1/4-19
10	3/8	10.5	0.4078	3/8-18NPT	9.7	0.38	PT3/8-19
15	1/2	13.5	0.5337	1/2-14NPT	12.7	0.50	PT1/2-14
20	3/4	14.0	0.5457	3/4-14NPT	14.1	0.56	PT3/4-14
25	1	17.5	0.6828	1-11 1/2NPT	16.2	0.64	PT1-11
32	1 1/4	18.0	0.7068	1 1/4-11 1/2NPT	18.5	0.73	PT1 1/4-11
40	1 1/2	18.5	0.7235	1 1/2-11 1/2NPT	18.5	0.73	PT1 1/2-11
50	2	19.0	0.7565	2-11 1/2NPT	22.8	0.90	PT2-11

DIMENSIONS OF STEEL PIPES

JIS G3454 STPG 38/JIS G3456 STPT 38/JIS G3455 STS, ETC(LENGTH: 5.5M)

NB O.D			Sch/20		Sch/30		Sch/40			Sch/60			Sch/80			Sch/100		Sch/120		Sch/160	
			Thick	Weight	Thick	Weight	Thick	Weight	kg/5.5	Thick	Weight	kg/5.5	Thick	Weight	kg/5.5	Thick	Weight	Thick	Weight	Thick	Weight
DN	IN	mm	mm	kg/m	mm	kg/m	mm	kg/m	Piece	mm	kg/m	Piece	mm	kg/m	Piece	mm	kg/m	mm	kg/m	mm	kg/m
6	1/8"	10.5	-	-	-	-	1.7	0.369	2.03	2.2	0.450	2.48	2.4	0.479	2.63	-	-	-	-	-	-
8	1/4"	13.8	-	-	-	-	2.2	0.629	3.46	2.4	0.675	3.71	3.0	0.799	4.39	-	-	-	-	-	-
10	3/8"	17.3	-	-	-	-	2.3	0.851	4.68	2.8	1.00	5.50	3.2	1.11	6.11	-	-	-	-	-	-
15	1/2"	21.7	-	-	-	-	2.8	1.31	7.21	3.2	1.46	8.03	3.7	1.64	9.02	-	-	-	-	4.7	1.97
20	3/4"	27.2	-	-	-	-	2.9	1.74	9.57	3.4	2.00	11.0	3.9	2.24	12.3	-	-	-	-	5.5	2.94
25	1"	34.0	-	-	-	-	3.4	2.57	14.1	3.9	2.89	15.9	4.5	3.27	18.0	-	-	-	-	6.4	4.36
32	1 1/4"	42.7	-	-	-	-	3.6	3.47	19.1	4.5	4.24	23.3	4.9	4.57	25.1	-	-	-	-	6.4	5.73
40	1 1/2"	48.6	-	-	-	-	3.7	4.10	22.6	4.5	4.89	26.9	5.1	5.47	30.1	-	-	-	-	7.1	7.27
50	2"	60.5	3.2	4.52	-	-	3.9	5.44	29.9	4.9	6.72	37.0	5.5	7.46	41.0	-	-	-	-	8.7	11.1
65	2 1/2"	76.3	4.5	7.97	-	-	5.2	9.12	50.2	6.0	10.4	57.2	7.0	12.0	66.0	-	-	-	-	9.5	15.6
80	3"	89.1	4.5	9.39	-	-	5.5	11.3	62.2	6.6	13.4	73.7	7.6	15.3	84.2	-	-	-	-	11.1	21.4
90	3 1/2"	101.6	4.5	10.8	-	-	5.7	13.5	74.3	7.0	16.3	89.7	8.1	18.7	103.	-	-	-	-	12.7	27.8
100	4"	114.3	4.9	13.2	-	-	6.0	16.0	88.0	7.1	18.8	103.1	8.6	22.4	123.	-	-	11.1	28.2	13.5	33.6
125	5"	139.8	5.1	16.9	-	-	6.6	21.7	119.	8.1	26.3	45.	9.5	30.5	168.	-	-	12.7	39.8	15.9	48.6
150	6"	165.2	5.5	21.7	-	-	7.1	27.7	152.	9.3	35.8	197.	11.0	41.8	230.	-	-	14.3	53.2	18.2	66.1
200	8"	216.3	6.4	33.1	7.0	36.1	8.2	42.1	232.	10.3	52.3	288.	12.7	63.8	351.	15.1	74.9	18.2	88.9	23.0	110.
250	10"	267.4	6.4	41.2	7.8	49.9	9.3	59.2	326.	12.7	79.8	439.	15.1	93.9	516.	18.2	112.	21.4	130.	28.6	169.
300	12"	318.5	6.4	49.3	8.4	64.2	10.3	78.3	431.	14.3	107.	589.	17.4	129.	710.	21.4	157.	25.4	184.	33.3	235.
350	14"	355.6	7.9	67.7	9.5	81.1	11.1	94.3	519.	15.1	127.	699.	19.0	158.	869.	23.8	195.	27.8	225.	35.7	282.
400	16"	406.4	7.9	77.6	9.5	93.0	12.7	123.	677.	16.7	160.	880.	21.4	203.	1117.	26.2	246.	30.9	286.	40.5	365.
450	18"	457.2	7.9	87.5	11.1	122.	14.3	156.	858.	19.0	205.	1128.	23.8	254.	1397.	29.4	310.	34.9	363.	45.2	459.
500	20"	508.0	9.5	117.	12.7	155.	15.1	184.	1012.	20.6	248.	1364.	26.2	311.	1711.	32.5	38.1	32.5	441.	50.0	565.

JIS G3452 SGP . E

NB D.D			Thick	Weight
DN	IN	mm	mm	kg/m
6	1/8"	10.5	2.0	0.419
8	1/4"	13.8	2.3	0.652
10	3/8"	17.3	2.3	0.851
15	1/2"	21.7	2.8	1.31
20	3/4"	27.2	2.8	1.68
25	1"	34.0	3.2	2.43
32	1 1/4"	42.7	3.5	3.38
40	1 1/2"	48.6	3.5	3.89
50	2"	60.5	3.8	5.31
65	2 1/2"	76.3	4.2	7.47
80	3"	89.1	4.2	8.79
90	3 1/2"	101.6	4.2	10.1
100	4"	114.3	4.5	12.2
125	5"	139.8	4.5	15.0
150	6"	165.2	5.0	19.8
200	8"	216.3	5.8	30.1
250	10"	267.4	6.6	42.4
300	12"	318.5	6.9	53.0
350	14"	355.6	7.9	67.7
400	16"	406.4	7.9	77.6
450	18"	457.2	7.9	87.5
500	20"	508.0	7.9	97.4

ASTM A53/A120 (ANSI B36.10)

N.S	OUTSUDE DIAMETER		SCH20				STD				SCH40				XS				SCH80				XXS				SCH160			
			THICK		WEIGHT		THICK		WEIGHT		THICK		WEIGHT		THICK		WEIGHT		THICK		WEIGHT		THICK		WEIGHT		THICK		WEIGHT	
	inch	mm	inch	mm	kg/ft	kg/m	inch	mm	kg/ft	kg/m	inch	mm	kg/ft	kg/m	inch	mm	kg/ft	kg/m	inch	mm	kg/ft	kg/m	inch	mm	kg/ft	kg/m	inch	mm	kg/ft	kg/m
1/8"	0.405	10.3	-	-	-	-	0.068	1.73	0.11	0.36	0.068	1.73	0.11	0.36	0.095	2.41	0.14	0.46	0.095	2.41	0.14	0.46	-	-	-	-	-	-	-	-
1/4"	0.540	13.7	-	-	-	-	0.088	2.24	0.19	0.63	0.088	2.24	0.19	0.63	0.119	3.02	0.25	0.80	0.119	3.02	0.25	0.80	-	-	-	-	-	-	-	-
3/8"	0.675	17.1	-	-	-	-	0.091	2.31	0.26	0.85	0.091	2.31	0.26	0.85	0.126	3.20	0.34	1.10	0.126	3.20	0.34	1.10	-	-	-	-	-	-	-	-
1/2"	0.840	21.3	-	-	-	-	0.109	2.77	0.39	1.27	0.109	2.77	0.39	1.27	0.147	3.73	0.49	1.62	0.147	3.73	0.49	1.62	0.294	7.47	0.78	2.55	0.188	4.78	0.59	1.93
3/4"	1.050	26.7	-	-	-	-	0.113	2.87	0.51	1.68	0.113	2.87	0.51	1.68	0.154	3.91	0.67	2.19	0.154	3.91	0.67	2.19	0.308	7.82	1.11	3.63	0.219	5.56	0.88	2.88
1"	1.315	33.4	-	-	-	-	0.133	3.38	0.76	2.50	0.133	3.38	0.76	2.50	0.179	4.55	0.99	3.23	0.179	4.55	0.99	3.23	0.358	9.09	1.66	5.45	0.250	6.35	1.29	4.22
1 1/4"	1.660	42.2	-	-	-	-	0.140	3.56	1.03	3.38	0.140	3.56	1.03	3.38	0.191	4.85	1.36	4.47	0.191	4.85	1.36	4.47	0.382	9.70	2.37	7.76	0.250	6.35	1.71	5.60
1 1/2"	1.900	48.3	-	-	-	-	0.145	3.68	1.23	4.05	0.145	3.68	1.23	4.05	0.200	5.08	1.65	5.41	0.200	5.08	1.65	5.41	0.400	10.16	2.91	9.55	0.281	7.14	2.71	7.23
2"	2.375	60.3	-	-	-	-	0.154	3.91	1.65	5.44	0.154	3.91	1.65	5.44	0.218	5.54	2.28	7.48	0.218	5.54	2.28	7.48	0.436	11.07	4.10	13.45	0.344	8.74	3.39	11.10
2 1/2"	2.875	73.0	-	-	-	-	0.203	5.16	2.63	8.62	0.203	5.16	2.63	8.62	0.276	7.01	3.48	11.41	0.276	7.01	3.48	11.41	0.552	14.02	6.29	20.41	0.375	9.53	4.54	14.90
3"	3.500	88.9	-	-	-	-	0.216	5.49	3.44	11.29	0.216	5.49	3.44	11.29	0.300	7.62	4.65	15.27	0.300	7.62	4.65	15.27	0.600	15.24	8.44	27.67	0.438	11.13	6.50	21.30
3 1/2"	4.000	101.6	-	-	-	-	0.237	5.74	4.34	13.57	0.226	5.74	4.34	13.57	0.318	8.08	5.68	18.63	0.318	8.08	5.68	18.63	-	-	-	-	-	-	-	-
4"	4.500	114.3	-	-	-	-	0.258	6.02	4.90	16.07	0.237	6.02	4.90	16.07	0.337	8.56	6.60	22.31	0.337	8.56	6.60	22.31	0.674	17.12	12.50	41.02	0.531	13.49	10.22	33.52
5"	5.563	141.3	-	-	-	-	0.280	6.55	6.64	21.78	0.258	6.55	6.64	21.78	0.375	9.53	9.45	31.0	0.375	9.53	9.45	31.0	0.750	19.05	17.50	57.42	0.625	15.88	14.96	49.09
6"	6.625	168.3	-	-	-	-	0.312	7.11	8.61	28.26	0.280	7.11	8.61	28.26	0.432	10.97	12.97	42.56	0.432	10.97	12.97	42.56	0.864	21.95	24.13	79.2	0.719	18.26	20.59	67.53
8"	8.625	219.1	0.250	6.35	10.15	33.31	0.365	8.18	12.97	42.55	0.322	8.18	12.97	42.55	0.500	12.7	19.70	64.64	0.500	12.7	19.70	64.64	0.875	22.23	32.89	107.9	0.906	23.01	33.92	111.30
10"	10.750	273.0	0.250	6.35	12.73	41.75	0.375	9.27	18.28	60.29	0.365	9.27	18.38	60.29	0.500	12.7	24.85	81.52	0.594	15.09	29.25	95.97	1.000	25.4	47.27	155.1	1.125	28.58	52.52	172.30
12"	12.750	323.8	0.250	6.35	15.15	49.71	0.375	9.53	22.51	73.86	0.406	10.31	24.19	79.70	0.500	12.7	29.70	97.43	0.688	17.48	40.23	132.0	1.000	25.4	56.97	186.9	1.312	33.32	72.76	238.70
14"	14.000	355.6	0.312	7.92	20.70	67.90	0.375	9.53	24.79	81.33	0.438	11.31	28.87	94.55	0.500	12.7	32.74	107.4	0.750	19.05	48.19	158.1	-	-	-	-	1.406	35.71	85.9	281.75
16"	16.000	406.4	0.312	7.92	23.72	77.83	0.375	9.53	28.43	93.27	0.500	12.7	37.58	123.3	0.500	12.7	37.58	123.3	0.844	21.44	62.03	203.5	-	-	-	-	1.594	40.49	111.4	365.40
18"	18.000	457.2	0.312	7.92	26.75	87.75	0.375	9.53	32.06	105.2	0.562	14.27	47.52	155.9	0.500	12.7	42.43	139.2	0.938	23.83	77.63	254.7	-	-	-	-	1.781	45.24	140.1	459.60
20"	20.000	508.0	0.375	9.53	35.69	117.1	0.375	9.53	35.69	117.1	0.594	15.09	55.90	184.4	0.500	12.7	47.27	155.1	0.981	24.91	94.85	311.2	-	-	-	-	1.969	50.01	172.2	564.87
24"	24.000	609.6	0.375	9.53	42.98	141.0	0.375	9.53	42.98	141.0	0.688	17.48	77.78	255.2	0.500	12.7	56.97	186.3	1.219	30.96	134.66	441.8	-	-	-	-	2.344	59.54	246.2	807.60

FLANGE FACING FINISH

6.4.4 Flange Facing. The finish of contact faces of pipe flanges and connecting end flanges of fittings shall be judges by visual comparison with standards(see ANSI/ASME B46.1)and not by instruments having stylus tracers and electronic amplification. The finishes required are given below. Other finishes may be furnished by agreement between user and manufacturer.

6.4.4.1 Raised Face Large Male and Female.
Either a serrated concentric or serrated spiral finish having from 24 grooves/in. to 40 grooves/in. shall be used. The cutting tool employed shall have an approximate 0.06 in. or larger radius. The resultant surface finish shall have a 125 in. to 500 in. roughness.

STANDARD FINISHES for Face of Flange(MSS SP6)

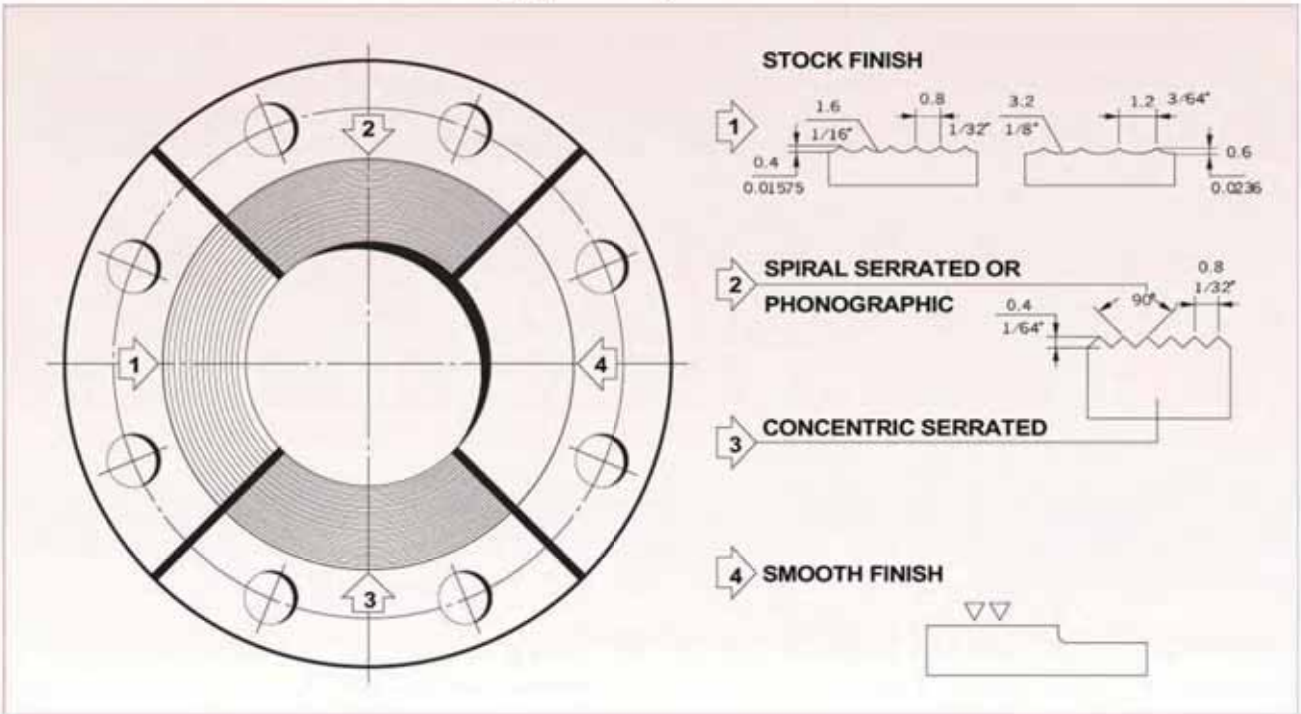

STOCK FINISH: The most widely used of any gasket finish, because, practically, is suitable for all ordinary service conditions. This is a continuous spiral groove. Flanges sizes12 " and smaller, are produced with a 1/16 "round-nosed tool at a feed of 1/32 "per revolution. For sizes 14 "and larger, the finish is made with 1/8 " round-nosed tool at a feed of 3/64 "per revolution.

SPIRAL SERRATED OF PHONOGRAPHIC: This finish is produced by using a 90 " included-angle <V) tool, making a spiral groove 1/64 " deep with a feed of 1/32 ".

CONCENTRIC SERRATED: This finish a produced by using a 90 " included-angle <V>tool, making concentric groove 1/64 " deep and 1/32" apart.

SMOOTH FINISH: This finish is produced by several shapes of tools cutting at speeds and feeds which leave no definite tool marks apparent to the naked eye.

1. RAISED FACE, AND LARGE MALE AND FEMALE

Either a serrated-concentric or serrated-spiral finish having from 24 to 40 grooves per inch is used.

The cutting tool employed has an approximate 0.06 in. or larger radius. The resultant surface finish has a 500 micro inch (12.5 μm)approximate roughness.

2. TONGUE AND GROOVE, AND SMALL MALE AND FEMALE

The gasket contact surface does not exceed 125 micro inch(3.2 μm)roughness.

3. RING JOINT

The inside wall surface of gasket groove does not exceed 63 micro inch(1.6 μm)roughness.

4. BLIND

Blind flanges need not be faced in the center if, when this center part is raised, its diameter is at least 1 in. smaller than the inside diameter of fittings of the corresponding pressure class. When the center part is depressed, its diameter is not greater than the inside diameter of the corresponding pressure class fittings. Machining of the depressed center is not required.

FINISH & TOLERANCE

1. Standard Finishes for Contact Face of Flanges

the flange face shall have a serrated finish consisting of 20 to 40 grooves per inch, 0.002 in. to 0.005 in. deep, cut spirally or concentrically with a round-nose tool.

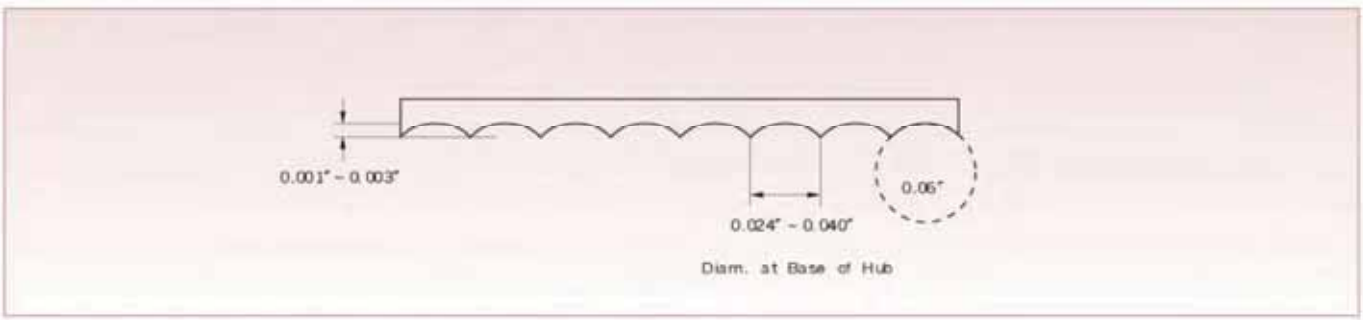

2. Dimensional tolerances for API 605 flanges

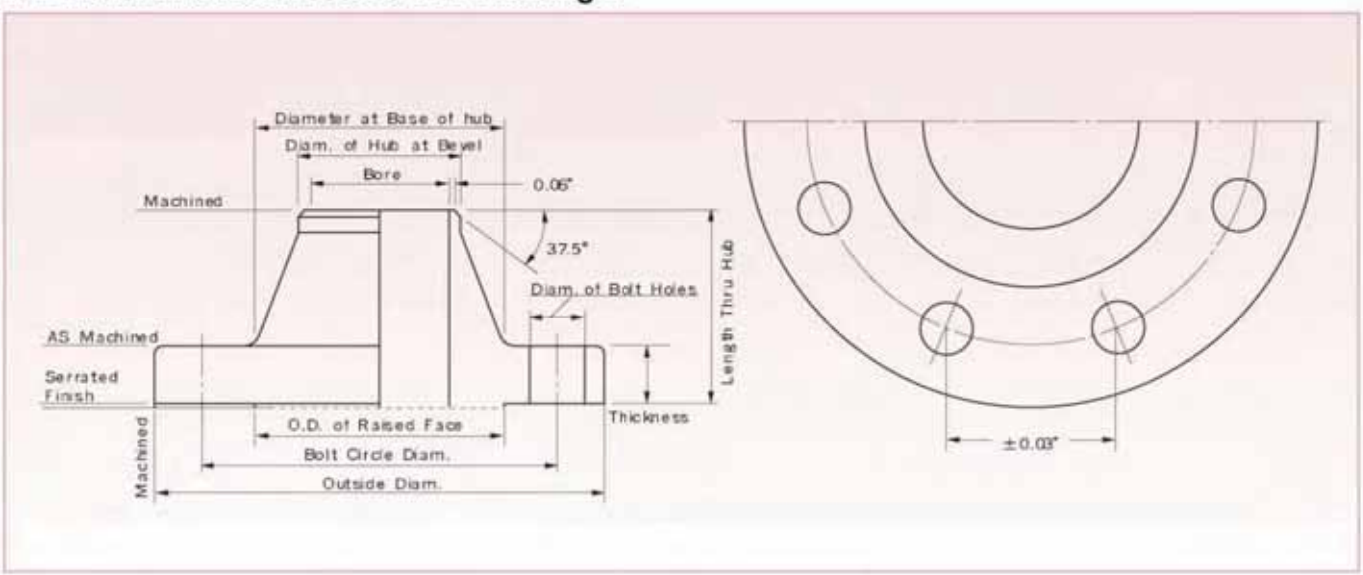

Dimension	Tolerance
Outside diameter of raised face	±0.03 "
Flange thickness	±0.19 ", -0 "
Length thru hub	±0.12 "
Diam. of hub at bevel	+0.16 ", -0.03 "
Bolt circle diameter	±0.06 "
Center-to-center of adjacent bolt holes	±0.03 "
Bore	+0.12 ", -0.06 "
Outside diameter	±0.12 " ★
Diameter at base of hub	±0.12 " ★

Notes:

(1) Flanges shall have bearing surfaces for bolting that are parallel to the flange face within 1 degree. any back facing or spot facing required to accomplish parallelism between the flange face and nut bearing surface on the back of the flange shall not reduce the flange thickness.

(2) Tolerances for the welding end of a welding neck flange shall be in co nformance with ANSI B16.25.

(3) Other tolerances than specified the table shall be in accordance with ANSI B16.5.

(4) The flange shall be either back-faced or spot-faced at the bolt-holes on the flange back if the nut bearing surface at the back of the flange is not parallel with the flange face within the tolerances listed in note(1), if the fillet at the hub interferes with the nut bearing surface or if the flange thickness exceeds the minimum required thickness by more than 0.19 inch(4.8 millimeters). the nut bearing surface is the spot-facing diameter at the bolt-holes as given in MSS SP-9. spot-facing shall be in accordance with MSS SP-9

(5) Tolerances marked ★ are not covered in API 605.

COMPARISON LIST FOR CASTING&FORGING

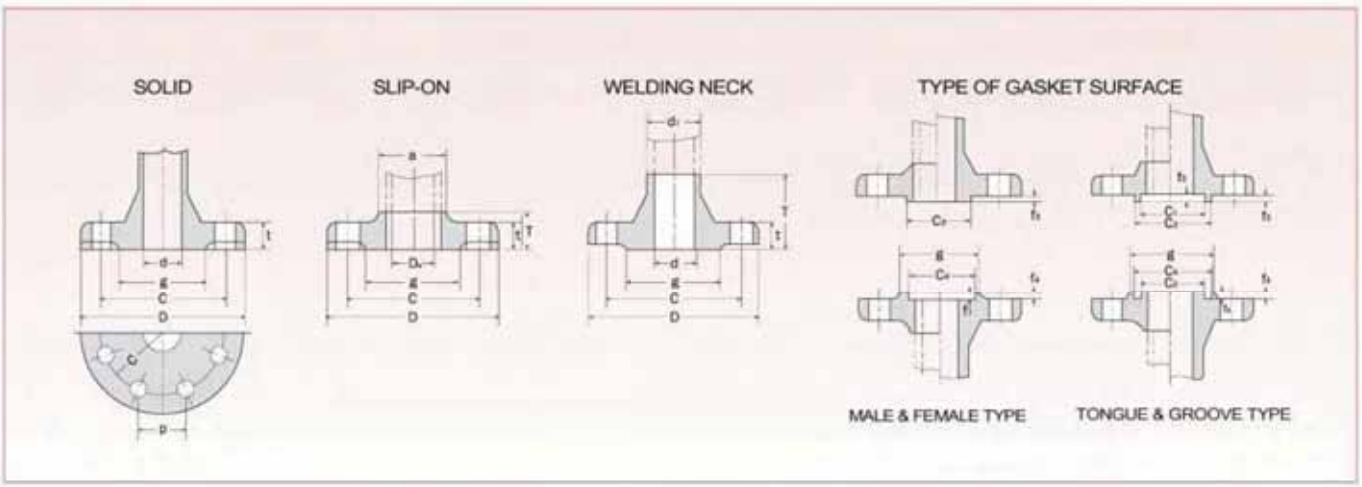

(Unit: mm)

Flange Section		Surface Condition	Basic Size	Dimensional Tolerance
Outside Dia D		As Forged (1)	300 & below	+Not Specified -2.0
			over 300 thru 600	
			over 600 thru 1000	
			over 1000 thru 1500	+Not Specified -3.0
			over 1500	
		Finish	300 & below	±1
			over 300 thru 600	±1.5
			over 600 thru 1000	±2
			over 1000 thru 1500	±2.5
			over 1500	±3
Inside Dia D	Solid Flange d(2)	As Forged (1)	16 & below	±1
			over 16 thru 63	±1.5
			over 63 thru 125	±2
			over 125 thru 150	±2.5
			over 250 thru 500	±3
			over 500 thru 1000	±4
			over 1000	±5
	Slip-on Flange do	Finish	100 & below	$^{+0.5}_{0}$
			over 100 thru 400	$^{+1}_{0}$
			over 400 thru 600	$^{+1.5}_{0}$
			over 600 thru 800	$^{+2}_{0}$
			over 800 thru 1000	$^{+2.5}_{0}$
			over 1000	$^{+3}_{0}$
	Welding Neck Flange d		100 & below	$^{0}_{-0.5}$
			over 100 thru 400	$^{0}_{-1}$
			over 400 thru 600	$^{0}_{-1.5}$
			over 600 thru 800	$^{0}_{-2}$
			over 800 thru 1000	$^{0}_{-2.5}$
			over 1000	$^{0}_{-3}$
Bolt Hole	Bolt Circle Dia. C		2500 & below	±0.5
			over 250 thru 550	±0.6
			over 550 thru 950	±0.8
			over 950 thru 1350	±1
			over 1350	±1.5

Flange Section		Surface Condition	Basic Size	Dimensional Tolerance
Bolt Hole	Pitch of Hole p	Drilling Hole	-	±0.5
Dia. of Hub	Slip-on Flange (a) and Welding Neck Flange (d_1)	As Forged	220 & below	$^{+2}_{0}$
			over 220 thru 450	$^{+3}_{0}$
			over 450 thru 650	$^{+4}_{0}$
			over 650 thru 850	$^{+6}_{0}$
			over 850 thru 1000	$^{+7}_{0}$
			over 1000	$^{+8}_{0}$
		Finish	220 & below	$^{+1}_{0}$
			over 220 thru 450	$^{+1.5}_{0}$
			over 450 thru 650	$^{+2}_{0}$
			over 650 thru 850	$^{+2.5}_{0}$
			over 850 thru 1000	$^{+3}_{0}$
			over 1000	$^{+3.5}_{0}$
Gasket Seat	C1, C2 C3, C4	Finish	500 & below	±0.3
			over 500 thru 1000	±0.35
			over 1000 thru 1500	±0.4
			over 1500	±0.5
	$f_1 f_2$	Finish	8 & below	±0.2
			over 8	±0.25
	g	Finish	200 & below	±0.8
			over 200 thru 650	±0.9
			over 650 thru 1000	±1
			ever 1000	±1.2
Thickness t		One-side Finish	20 & below	$^{+1.5}_{0}$
			over 20 thru 50	$^{+2}_{0}$
			over 50 thru 100	$^{+3}_{0}$
		Both-side Finish	20 & below	$^{+1}_{0}$
			over 20 thru 50	$^{+1.5}_{0}$
			over 50 thru 100	$^{+2}_{0}$
Hub Height T	Flange with Pipe inserted	Finish	50 & below	±1
			over 50 thru 100	±1.5
			over 100 thru 200	±2
	Flange with Butt-welded Pipe	Finish	over 200 & below	$^{+2}_{0}$
			over 200 thru 300	$^{+3}_{0}$

Note

(1) This dimensional tolerance applies to the machined surface, as required.

(2) This dimension "d" has been specified only for the flange, of which the bore part is cylindrical in shape.

Remarks

(1) The dimensions "d" of bore part of the solid flanges with surface, as forged of valves, pumps, etc. are allowed up to plus 100% of the above dimensional tolerance. Provided that the required thickness shall be free from its influence.

(2) The thickness of flange of valve and the like, of which the dimension between flange faces is limited to a fixed value, are allowed up to plus 100% of the above dimensional tolerance in the column of thickness.

(3) In the case of spot facing of the single surface finishing, the thickness of spot facing is allowed up to 70% of the dimensional tolerance in the above column of thickness in negative side.

(4) The chain double-dashed lines in the figures of solid flange and socket welding type flange illustrate the cases of large raised face flange.

HYDROSTATIC TEST PRESSURES

Material			Test pressure by classes																											
Group No	Forging	Casting	150				300				600				900				1500				2500				4500			
			Shell		Seat/ Backseat		Shell		Seat/ Backseat		Shell		Seat/ Backseat		Shell		Seat/ Backseat		Shell		Seat/ Backseat		Shell		Seat/ Backseat		Shell		Seat/ Backseat	
			kg/cm²	psi	kg/cm²	psi	kg/cm²	psi	kg/cm²	psi	kg/cm²	psi	kg/cm²	psi	kg/cm²	psi	kg/cm²	psi	kg/cm²	psi	kg/cm²	psi	kg/cm²	psi	kg/cm²	psi	kg/cm²	psi	kg/cm²	psi
	A105																													
1.1	A350-LF2	A216-WCB	32.0	450	23.0	325	79.5	1125	58.5	825	156.5	2225	116.5	1650	236.0	3350	172.5	2450	392.0	5515	288.5	4100	652.5	9575	478.5	6800	1172.5	16675	860.0	12225
1.2	A350-LF3	A126WCC A352-LC2 A352-LC3	32.0	450	23.0	325	79.5	1125	58.5	825	158.5	2250	116.5	1650	237.5	3375	174.5	2475	395.5	5625	290.5	4125	659.5	9375	483.5	6875	1186.5	16875	870.5	12375
1.3		A352-LCB	28.5	400	21.5	300	74.5	1050	54.5	775	148.0	2100	109.0	1550	221.5	3150	162.0	2300	367.5	5225	269.0	3825	612.0	8100	448.5	6375	1099.0	15625	806.5	11470
1.4	A350-LF1		26.5	375	19.5	275	67.0	950	49.5	700	133.0	1875	97.0	1375	195.5	2275	144.5	2050	327.0	4650	239.5	3400	543.5	7125	399.5	5675	977.5	13900	717.5	10200
		A217-WC1																												
1.5	A182-F1	A352-LC1	28.5	400	21.5	300	74.5	1050	54.5	775	148.0	2100	109.0	1550	221.5	3150	162.0	2300	367.5	5225	269.0	3825	612.0	8700	448.5	6375	1099.0	15625	806.5	11470
1.7	A182-F2	A217-WC4 A217-WC5	32.0	450	23.0	325	79.5	1125	58.5	825	158.5	2250	116.5	1650	237.5	3375	174.5	2475	395.5	5625	290.5	4125	659.5	9375	483.5	6875	1186.5	16875	870.5	12375
1.9	A182-F12 A182-F11	A217-WC6	32.0	450	23.0	325	79.5	1125	58.5	825	158.5	2250	116.5	1650	237.5	3375	174.5	2475	395.5	5625	290.5	4125	659.5	9375	483.5	6875	1186.5	16875	870.5	12375
1.10	A182-F22	A217-WC9	32.0	450	23.0	325	79.5	1125	58.5	825	158.5	2250	116.5	1650	237.5	3375	174.5	2475	395.5	5625	290.5	4125	659.5	9375	483.5	6875	1186.5	16875	870.5	12375
1.11	A182-F21		32.0	450	23.0	325	79.5	1125	58.5	825	158.5	2250	116.5	1650	237.5	3375	174.5	2475	395.5	5625	290.5	4125	659.5	9375	483.5	6875	1186.5	16875	870.5	12375
1.13	A182-F5a	A217-C5	32.0	450	23.0	325	79.5	1125	58.5	825	158.5	2250	116.5	1650	237.5	3375	174.5	2475	395.5	5625	290.5	4125	659.5	9375	483.5	6875	1186.5	16875	870.5	12375
1.14	A182-F9	A217-C12	32.0	450	23.0	325	79.5	1125	58.5	825	158.5	2250	116.5	1650	237.5	3375	174.5	2475	395.5	5625	290.5	4125	659.5	9375	483.5	6875	1186.5	16875	870.5	12375
2.1	A182-F304 A182-F304H	A351-CF3 A351-CF8	30.0	425	23.0	325	77.5	1100	56.5	800	153.0	2175	112.5	1600	229.0	3250	169.0	2400	380.0	5400	279.5	3975	633.0	9000	464.5	6600	1139.5	16200	837.0	11900
2.2	A182-F316 A182-F316H	A351-CF3A A351-CF8A A351-CF3M A351-CF8M	30.0	425	23.0	325	77.5	1100	56.5	800	153.0	2175	112.5	1600	229.0	3250	169.0	2400	380.0	5400	279.5	3975	633.0	9000	464.5	6600	1139.5	16200	837.0	11900
2.3	A182-F304L A182-F316L		25.0	350	19.5	275	63.5	900	49.5	675	127.0	1800	93.5	1325	190.0	2700	141.0	2000	316.5	4500	232.5	3300	527.5	7500	387.0	5500	949.5	13500	6965	9900
2.4	A182-F321 A182-F321H		30.0	425	23.0	325	77.5	1100	56.5	800	153.0	2175	112.5	1600	229.0	3250	169.0	2400	380.0	5400	279.5	3975	633.0	9000	464.5	6600	1139.5	16200	837.0	11900
2.5	A182-F347 A182-F347H A182-F348 A182-F348	A351-CF8C	30.0	425	23.0	325	77.5	1100	56.5	800	153.0	2175	112.5	1600	229.0	3250	169.0	2400	380.0	5400	279.5	3975	633.0	9000	464.5	6600	1139.5	16200	837.0	11900
2.6	A351-CH20	A351-CH20	28.5	400	21.5	300	72.5	1025	53.0	750	143.0	2025	106.0	1500	213.5	3025	157.0	2225	356.0	5050	261.0	3700	562.0	8400	435.0	6175	1065.5	15125	782.0	11100
2.7	A182-F310	A351-CK20	28.5	400	21.5	300	72.5	1025	53.0	750	143.0	2025	106.0	1500	213.5	3025	157.0	2225	356.0	5050	261.0	3700	562.0	8400	435.0	6175	1065.5	15125	782.0	11100

PRESSURE-TAMPERATURE RATINGS

(°C/kg/cm²)

CLASS			150	300	600	800	1500	800								1500							
MATERIAL			A105[a] & A350-LF2[b]					A182								A182							
								F5	F9	F11[c]	F22[c]	F304	F304L	F316	F316L	F5	F9	F11[c]	F22[c]	F304	F304L	F316F	316L
TEMP.	°F	°C																					
-20 to	100	37.5	20.1	52.1	104.1	138.9	260.5	140.6	140.6	140.6	146.6	135.0	112.5	135.0	112.5	263.7	263.7	263.7	263.7	253.2	210.9	253.2	210.9
	200	93.3	18.3	47.5	95.0	126.6	237.3	140.6	140.6	133.6	134.3	112.5	949.0	116.4	95	263.7	263.7	263.7	251.7	210.9	177.9	217.6	177.9
	300	148.9	16.2	46.1	92.5	123.1	230.6	136.4	136.4	126.2	126.9	99.2	85.1	105.1	85.1	260.0	260.0	236.6	238.0	185.6	159.6	196.5	159.6
	400	204.4	14.1	44.7	89.3	118.9	222.9	132.3	132.2	123.4	121.7	88.3	77.4	96.4	77.4	248.2	248.2	231.3	227.8	165.3	145.2	180.7	145.2
	500	260.0	12.0	42.2	84.4	112.2	210.6	124.8	124.8	120.3	119.9	81.9	71.7	89.7	71.8	233.8	223.8	225.7	225.0	153.7	134.3	168.1	134.3
	600	315.6	9.9	38.7	77.0	102.7	192.3	113.6	113.6	113.6	113.6	77.7	67.5	84.8	67.5	212.7	212.7	212.7	212.7	145.9	126.6	158.6	126.6
	650	343.4	8.8	37.7	75.6	100.6	188.8	110.4	110.4	110.4	110.4	76.7	65.8	83.4	65.8	206.7	206.7	206.7	206.7	143.5	123.1	156.1	123.1
	700	371.1	7.7	36.9	74.9	99.9	187.4	106.6	106.6	106.6	106.6	75.6	64.4	80.9	64.4	199.7	199.7	199.7	199.7	141.7	120.6	151.9	120.6
	750	398.9	6.7	35.5	71.0	94.6	177.2	99.9	99.9	99.9	99.8	74.6	62.9	79.5	63.0	187.0	187.0	187.0	187.0	139.9	118.1	148.4	118.1
	800	426.7	5.7	28.9	58.0	77.4	144.9	93.2	95.3	95.3	95.3	73.9	61.6	77.7	61.6	174.7	178.6	178.6	178.6	138.5	115.7	145.9	115.7
	850	454.4	4.6	19.0	37.7	50.3	94.3	82.3	91.4	91.4	91.4	72.8	60.5	75.9	60.5	154.4	171.2	171.2	171.2	136.8	113.2	142.8	113.2
	900	482.2	3.6	12.0	24.3	32.4	60.5	66.1	84.4	84.4	84.4	72.1		73.9		124.1	157.9	157.9	157.9	135.0		138.5	
	950	510.0	2.5	7.4	14.5	19.4	36.3	48.9	69.3	70.7	70.7	70.3		72.5		91.8	130.1	132.6	132.6	131.5		135.7	
	1000	537.8	1.4	3.6	7.4	9.9	18.3	35.9	54.9	41.9	50.3	60.5		68.2		67.5	102.7	78.4	94.3	113.2		128.0	
	1050	565.6						26.4	35.5	25.7	37.3	58.0		67.5		49.6	66.5	48.2	70	108.7		126.6	
	1100	593.3						19.4	21.1	18.0	21.1	48.2		60.5		36.2	39.8	33.8	39.8	90.4		113.2	
	1150	621.1						13.0	14.1	9.9	19.4	36.6		51.7		24.3	26.8	18.3	36.3	68.9		96.4	
	1200	648.9						8.5	9.9	6.7	10.2	29.2		38.7		15.9	18.3	12	19.4	54.2		72.5	
	1250	676.7										20.8		34.1						38.7		64.0	
	1300	704.4										15.4		25.7						28.9		48.2	
	1350	732.2										11.6		19.4						21.8		36.3	
	1400	760.0										9.2		14.1						16.9		26.8	
	1450	787.8										6.7		10.9						12.0		20.4	
	1500	815.6										4.6		7.8						8.5		14.5	

(a) Permissible, but not recommended for prolonged usage above 426°C. (b)A350-LF2 is suitable down to -45°C at -29°C at pressure ratings. Do not use A350-LF2 above 399°C.
(c) Permissible, but not recommended for prolonged usage above 593°C.

CONVERSION TABLES

STRESS

1N/mm²=1MPa

kgf/mm²	kgf/cm²	lbf/ft²	Pa	MPa(N/mm²)
1	1×10^{1}	2.048×10^{3}	9.80665×10^{6}	9.80665
1×10^{-2}	1	2.048×10^{1}	9.80665×10^{4}	9.80665×10^{-2}
4.882×10^{-4}	4.882×10	1	4.786×10	4.786×10^{-7}
1.01972×10^{-7}	1.01972×10^{-5}	2.089×10^{-2}	1	1×10^{-6}
1.0972×10^{-1}	1.01972×10	2.089×10^{4}	1×10^{6}	1

LENGTH

m	cm	in	ft	yd	km	mile	Nautical mile
1	100	39.37	3.281	1.094	1	0.6214	0.5400
0.01	1	0.3937	0.032 81	0.010 94	1.609	1	0.8690
0.0254	2.510	1	0.083 33	0.027 78	1.852	1.151	1
0.3048	30.48	12	1	0.333 3			
0.9144	91.44	36	3	1			

KINEMATIC VISCOSITY

1St=1cm²/s

m²/s	ft²/s	cSt	St
1	1.076×10	1×10^{6}	1×10^{2}
9.290×10^{-2}	1	9.2900×10^{5}	9.290×10^{1}
1×10^{-6}	1.076×10^{-5}	1	1×10^{-2}
1×10^{-4}	1.076×10^{-3}	1×10^{2}	1

AREA

m²	in²	ft²	yd²	km²	acre	mile²	ha
1	1550	10.76	1.196	1	247.1	0.386 1	100
6.452×10^{-4}	1	6.944×10^{-3}	7.716×10^{-4}	4.047×10^{-3}	1	1.562×10^{-7}	0.4047
0.09290	144	1	0.1111	2.590	640	1	259.0
0.8361	1296	9	1	0.01	2.471	3.861×10^{-3}	1

VOLUME

m³	in³	ft³	yd³	dm³	gal(British)	gal(U.S)	in³
1	61 024	35.31	1.308	1	0.220 0	0.264 2	61.02
1.639×10^{-5}	1	5.787×10^{-4}	2.143×10^{-5}	4.546	1	1.201	277.4
0.02832	1 728	1	0.03704	3.785	0.832 7	1	231
0.7646	46 656	27	1	0.016 39	3.605×10^{-3}	4.329×10^{-3}	1

PRESSURE

Mpa	kgf/cm²	lbf/in²	atm	mHg	inHg	mH₂o	ftH₂o
1	10.20	145.0	9.869	7.501	295.3	102.0	334.6
0.098 07	1	14.22	0.967 8	0.735 6	28.96	10	32.61
0.006 895	0.070 31	1	0.068 05	0.051 71	2.036	0.703 1	2.307
0.101 3	1.033	14.70	1	0.76	29.92	10.33	33.90
0.133 3	1.360	19.34	1.316	1	39.37	13.60	44.60
0.003 386	0.034 53	0.491 2	0.033 42	0.025 4	1	0.345 3	1.133
0.009 806	0.1	1.422	0.096 78	0.073 55	2.896	1	3.281
0.002 989	0.030 48	0.433 5	0.029 50	0.022 42	0.882 7	0.304 8	1

VISCOSITY

Poise=g/cm·s (CGS UNIT)	centipose.cP	kg/m·h	kg/m·s	lbf/ft·s
1	100	0.1	360	0.0672
0.01	1	0.001	3.6	0.000672
10	1000.0	1	3600.0	0.672
0.00278	0.278	0.0-278	1	0.000187
14.88	1488.0	1.488	5356.8	1

POWER

KW	PS	HP(British)	kgf·m/s	ft·lbf/s	Kcal/s	BTU/s(British)
1	1.360	1.340	102.0	737.6	0.238 9	0.918 0
0.735 5	1	0.985 9	75	542.5	0.175 7	0.697 3
0.746	1.014	1	76.07	550.2	0.178 2	0.707 2
0.009 807	0.013 33	0.013 15	1	7.233	0.002 343	0.009 297
0.001 356	0.001 843	0.001 817	0.138.3	1.0	0.003 239	0.001 285
4.186	5.691	5.611	426.9	3087.0	1	3.968
1.055	1.434	1.414	107.6	778.0	0.252 0	1

VELOCITY

m/s	km/h	kn	ft/s	mi/h
1	3.6	1.944	3.281	2.237
0.277 8	1	0.540 0	0.911 3	0.621 4
0.514 4	151	1	1.688	1.151
0.304 8	1.097	0.592 5	1	0.681 8
0.447 0	1.609	0.869 0	1.467	1

FLOW

l/s	m³/h	m³/s	British gal/min	U.S gal/min	ft³/h	ft³/s
1	3.6	0.001	13.197	15.8514	127.14	0.03532
0.2778	1	0.0-2778	3.6658	4.4032	35.317	0.09-801
1.000	3600.0	1	13197.0	15851.0	127150.0	35.3160
0.075775	0.27279	0.0-75775	1	1.2011	9.6342	0.0-2676
0.06309	0.2271	0.0-6304	0.8325	1	8.0208	0.0-2228
0.0-7865	0.02832	0.0-7865	0.1038	0.1247	1	0.0-2778
28.3153	101.935	0.02832	373.672	448.833	3600.0	1

ENERGY

1J-1Ws, 1wh=3600Ws, 1cal=4.18605J

kgf·m	lbf·ft	J	kw·h	
1	7.231	9.807	2.724×10^{-6}	2.343×10^{-3}
1.383×10^{-1}	1	1.356	3.766×10^{-7}	3.239×10^{-4}
1.0197×10^{-1}	7.376×10^{-1}	1	2.778×10^{-7}	2.389×10^{-4}
3.671×10^{5}	2.665×10^{6}	3.600×10^{6}	1	8.600×10^{2}
4.269×10^{2}	3.087×10^{3}	4.186×10^{3}	1.163×10^{-3}	1

WEIGHT

kg	g	t(tone)France	lb	British ton	U.S ton
0.001	1	0.0-1	0.002205	0.0-984	0.0-1102
1	1,000	0.001	2.2046	0.0-984	0.0-1102
1,000	1×10^{6}	1	2,204.6	0.9842	1.1023
0.4536	453.6	0.0-4536	1	0.0-446	0.0-51
1,016.05	1,016,047	1.01605	2,240	1	1.12
907,185	907,185	0.90719	2,000	0.86289	1

DENSITY

1g/cm³=1t/m³

g/cm³	kg/m³	lb/in	lb/ft³	H.U.S gal
1	1×10^{3}	3.613×10^{-2}	6.243×10	8.345
1×10^{-3}	1	3.613×10^{-5}	6.243×10^{-2}	8.345×10^{-3}
2.768×10	2.768×10^{6}	1	1.728×10^{3}	231
1.602×10^{-2}	1.602×10	5.787×10^{-4}	1	1.337×10^{-1}
1.198×10^{-1}	1.198×10^{3}	4.329×10^{-3}	7.481	1

FORCE

1dyn=10N

kgf	lbf	N	dyn
1	2.205	9.80655	9.80665×10^{5}
4.536×10^{-1}	1	4.44822	4.44822×10^{5}
1.01972×10^{-1}	2.248×10^{-1}	1	1×10^{5}
1.01972×10^{-6}	2.248×10^{-6}	1×10^{-5}	1

CORROSION RESISTANCE GUIDE

Fluid	Materials													
	Carbon Steel	Cast Iron	Type 302/304 Stainless Steel	Type 316 Stainless Steel	Bronze	Monel ®	Hastelloy ® B	Hastelloy ® C	Durimet ® 20	Titanium	Cobalt-Base Alloy 6	Type 416 Stainless Steel	Type 440c Hard Stainless Steel	17-4ph Hard Stainless Steel
Acetaldehyde	A	A	A	A	A	A	I.L.	A	A	I.L.	I.L.	A	A	A
Acetic acid, Air Free	C	C	B	B	B	B	A	A	A	A	A	C	C	B
Acetic Acid, Aerated	C	C	A	A	A	A	A	A	A	A	A	C	C	B
Acetic Acid, Vapors	C	C	A	A	B	B	I.L.	A	B	A	A	C	C	B
Acetone	A	A	A	A	A	A	A	A	A	A	A	A	A	A
Acetylene	A	A	A	A	I.L.	A	A	A	A	I.L.	A	A	A	A
Alcohols	A	A	A	A	A	A	A	A	A	A	A	A	A	A
Aluminum Sulfate	C	C	A	A	B	B	A	A	A	A	I.L.	C	C	I.L.
Ammonia	A	A	A	A	C	A	A	A	A	A	A	A	A	I.L.
Ammonium Chloride	C	C	B	B	B	B	A	A	A	A	B	C	C	I.L.
Ammonium Nitrate	A	C	A	A	C	C	A	A	A	A	A	C	B	I.L.
Ammonium Phosphate(Mono-basic)	C	C	A	A	B	B	A	A	B	A	A	B	B	I.L.
Ammonium Sulfate	C	C	B	A	B	A	A	A	A	A	A	C	C	I.L.
Ammonium Sulfite	C	C	A	A	C	C	I.L.	A	A	A	A	B	B	I.L.
Aniline	C	C	A	A	C	B	A	A	A	A	A	C	C	I.L.
Asphalt	A	A	A	A	A	A	A	A	A	I.L.	A	A	A	A
Beer	B	C	A	A	B	A	A	A	A	A	A	B	B	A
Benzene (Benzol)	A	A	A	A	A	A	A	A	A	A	A	A	A	A
Benzoic Acid	C	C	A	A	A	A	I.L.	A	A	A	I.L.	A	A	A
Boric Acid	C	C	A	A	A	A	A	A	A	A	A	B	B	I.L.
Butane	A	A	A	A	A	A	A	A	A	I.L.	A	A	A	A
Calcium Chloride (Alkaline)	B	B	C	B	C	A	A	A	A	A	I.L.	C	C	I.L.
Calcium Hypochlorite	C	C	B	B	B	B	C	A	A	A	I.L.	C	C	I.L.
Carbolic Acid	B	B	A	A	A	A	A	A	A	A	A	I.L.	I.L.	I.L.
Carbon Dioxide, Dry	A	A	A	A	A	A	A	A	A	A	A	A	A	A
Carbon Dioxide, Wet	C	C	A	A	B	A	A	A	A	A	A	A	A	A
Carbon Disulfide	A	A	A	A	C	B	A	A	A	A	A	B	B	I.L.
Carbon Tetrachloride	B	B	B	B	A	A	B	A	A	A	I.L.	C	A	I.L.
Carbonic acid	C	C	B	B	C	A	A	A	A	I.L.	I.L.	A	A	A
Chlorine Gas, Dry	A	A	B	B	C	A	A	A	A	C	B	C	C	C
Chlorine Gas, Wet	C	C	C	C	C	C	C	B	C	A	B	C	C	C
Chlorine, Liquid	C	C	C	C	B	C	C	A	B	C	B	C	C	C
Chromic Acid	C	C	C	B	C	A	C	A	C	A	B	C	C	C
Citric Acid	I.L.	C	B	A	A	B	A	A	A	A	I.L.	B	B	B
Coke Oven Gas	A	A	A	A	B	B	A	A	A	A	A	A	A	A
Copper Sulfate	C	C	B	B	B	C	I.L.	A	A	A	I.L.	A	A	A
Cottonseed Oil	A	A	A	A	A	A	A	A	A	A	A	A	A	A
Creosote	A	A	A	A	C	A	A	A	A	I.L.	A	A	A	A
Ethane	A	A	A	A	A	A	A	A	A	A	A	A	A	A
Ether	B	C	A	A	A	A	A	A	A	A	A	A	A	A
Ethyl Chloride	C	C	A	A	A	A	A	A	A	A	A	B	B	I.L.
Ethylene	A	A	A	A	A	A	A	A	A	A	A	A	A	A
Ethylene Glycol	A	A	A	A	A	A	I.L.	I.L.	A	I.L.	A	A	A	A
Ferric Chloride	C	C	C	C	C	C	C	B	C	A	B	C	C	I.L.
Formaldehyde	B	B	A	A	A	A	A	A	A	A	A	A	A	A
Formic acid	I.L.	C	B	B	A	A	A	A	A	C	A	C	C	B
Freon, Wet	B	B	B	A	A	A	A	A	A	A	A	I.L.	I.L.	I.L.
Freon, Dry	B	B	A	A	A	A	A	A	A	A	A	I.L.	I.L.	I.L.
Furfural	A	A	A	A	A	A	A	A	A	A	A	B	B	I.L.
Gasoline, Refined	A	A	A	A	A	A	A	A	A	A	B	A	A	A
Glucose	A	A	A	A	A	A	A	A	A	A	B	A	A	A
Hydrochloric Acid, Aerated	C	C	C	C	C	C	A	B	C	C	B	C	C	C
Hydrochloric Acid, Air Free	C	C	C	C	C	C	A	B	C	C	I.L.	C	C	C
Hydrofluoric Acid, Aerated	B	C	C	B	C	C	A	A	B	C		C	C	C
Hydrofluoric Acid, Air Free	A	C	C	B	C	A	A	A	B	C		C	C	

A-Recommended C-Unsatisfactory
B-Minor to moderate effect. Proceed with caution. I.L.-In formation lacking

Note: Ratings are based on media at ambient temperature unless otherwise specified.
These ratings should be used as *a general guide only.*

CORROSION RESISTANCE GUIDE

Fluid	Materials													
	Carbon Steel	Cast Iron	Type 302/304 Stainless Steel	Type 316 Stainless Steel	Bronze	Monel ®	Hastelloy ® B	Hastelloy ® C	Durimet ® 20	Titanium	Cobalt-Base Alloy 6	Type 416 Stainless Steel	Type 440c Hard Stainless Steel	17-4ph Hard Stainless Steel
Hydrogen	A	A	A	A	A	A	A	A	A	A	A	A	A	A
Hydrogen Peroxide	I.L.	A	A	A	C	A	B	B	A	A	I.L.	B	B	I.L.
Hydrogen Sulfide, Liquid	C	C	A	A	C	C	A	A	B	A	A	C	C	I.L.
Magnesium Hydroxide	A	A	A	A	B	A	A	A	A	A	A	A	A	I.L.
Mercury	A	A	A	A	C	B	A	A	A	A	A	A	A	B
Methanol	A	A	A	A	A	A	A	A	A	A	A	A	B	A
Methyl Ethyl Ketone	A	A	A	A	A	A	A	A	A	I.L.	A	A	A	A
Milk	C	C	A	A	A	A	A	A	A	A	A	C	C	C
Natural Gas	A	A	A	A	A	A	A	A	A	A	A	A	A	A
Nitric Acid	C	C	A	B	C	C	C	B	A	A	C	C	C	B
Oleic Acid	C	C	A	A	B	A	A	A	A	A	A	A	A	I.L.
Oxalic Acid	C	C	B	B	B	B	A	A	A	B	B	B	B	I.L.
Oxygen	A	A	A	A	A	A	A	A	A	A	A	A	A	A
Petroleum Oils, Refined	A	A	A	A	A	A	A	A	A	A	A	A	A	A
Phosphoric Acid, Aerated	C	C	A	A	C	C	A	A	A	B	A	C	C	C
Phosphoric Acid, Air Free	C	C	A	A	C	B	A	A	A	B	A	C	C	C
Phosphoric Acid Vapors	C	C	B	B	C	C	A	I.L.	A	B	C	C	C	C
Picric Acid	C	C	A	A	C	C	A	A	A	I.L.	I.L.	B	B	I.L.
Potassium Chloride	B	B	A	A	B	B	A	A	A	A	I.L.	C	C	I.L.
Potassium Hydroxide	B	B	A	A	B	A	A	A	A	A	I.L.	B	B	I.L.
Propane	A	A	A	A	A	A	A	A	A	A	A	A	A	A
Rosin	B	B	A	A	A	A	A	A	A	I.L.	A	A	A	A
Silver Nitrate	C	C	A	A	C	C	A	A	A	A	B	B	B	I.L.
Sodium Acetate	A	A	B	A	A	A	A	A	A	A	A	A	A	A
Sodium Carbonate	A	A	A	A	A	A	A	A	A	A	A	B	B	A
Sodium Chloride	C	C	B	B	A	A	A	A	A	A	A	B	B	B
Sodium Chromate	A	A	A	A	A	A	A	A	A	A	A	A	A	A
Sodium Hydroxide	A	A	A	A	C	A	A	A	A	A	A	B	B	A
Sodium Hypochloride	C	C	C	C	B-C	B-C	C	A	B	A	I.L.	C	C	I.L.
Sodium Thiosulfate	C	C	A	A	C	C	A	A	A	A	I.L.	B	B	I.L.
Stannous Chloride	B	B	C	A	C	B	A	A	A	A	I.L.	C	C	I.L.
Stearic Acid	A	C	A	A	B	B	A	A	A	A	B	B	B	I.L.
Sulfate Liquor (black)	A	A	A	A	C	A	A	A	A	A	A	I.L.	I.L.	I.L.
Sulfur	A	A	A	A	C	A	A	A	A	A	A	A	A	A
Sulfur Dioxide, Dry	A	A	A	A	A	A	B	A	A	A	A	B	B	I.L.
Sulfur Trioxide, Dry	A	A	A	A	A	A	B	A	A	A	A	B	B	I.L.
Sulfuric Acid, Aerated	C	C	C	C	C	C	A	A	A	B	B	C	C	C
Sulfuric Acid, Air Free	C	C	C	C	B	B	A	A	A	B	B	C	C	C
Sulfurous Acid	C	C	B	B	B	C	A	A	A	A	B	C	C	I.L.
Tar	A	A	A	A	A	A	A	A	A	A	A	A	A	A
Trichloroethylene	B	B	B	A	A	A	A	A	A	A	A	B	B	I.L.
Turpentine	B	B	A	A	A	B	A	A	A	A	A	A	A	A
Vinegar	C	C	A	A	B	A	A	A	A	I.L.	A	C	C	A
Water, Boiler Feed	B	C	A	A	C	A	A	A	A	A	A	B	A	A
Water, Distilled	A	A	A	A	A	A	A	A	A	A	A	B	B	I.L.
Water, Sea	B	B	B	B	A	A	A	A	A	A	A	C	C	A
Whiskey And Wines	C	C	A	A	A	B	A	A	A	A	A	C	C	I.L.
Zinc Chloride	C	C	C	C	C	C	A	A	A	A	B	C	C	I.L.
Zinc Sulfate	C	C	A	A	B	A	A	A	A	A	A	B	B	I.L.

A-Recommended
B-Minor to moderate effect. Proceed with caution.
C-Unsatisfactory
I.L.-In formation lacking

Note: Ratings are based on media at ambient temperature unless otherwise specified. These ratings should be used as a general guide only.

REFERENCE STANDARD & SPECIFICATION

ANSI STANDARDS-AMERICAN NATIONAL STANDARDS

B1.1	Unified Screw Threads
B2.1	Pipe Threads(Except Dryseal)
B16.1	Steel Pipe Flanges Flanged Fittings
B16.10	Face to face and End to-End Dimensions of Ferrous Valves
B16.11	Forged Steel Fittings Socket Welding and Threaded
B16.20	Ring-Joint Gaskets and Grooves for Steel Pipe Flanges
B16.21	Nonmetallic Gaskets for Pipe Flanges
B16.25	Buttwelding Ends
B16.34	Steel Valves Flanged and Buttwelding End
B18.21	Square and Hax Bolts and Screws
B18.22	Square and Hax Nuts
B31.1	Power Piping
B31.2	Fuel Gas Piping
B31.3	Chemical Plant and Petroleum Refining Piping
B31.4	Liquid Petroleum Transportation Piping Systems
B31.5	Refrigeration Piping Systems
B31.7	Nuclear Power Piping
B31.8	Gas Transmission and Distribution Piping Systems
B31.10	Wrought-Steel and Wrought-lion Pipe

API STANDARDS-AMERICAN PETROLEUM INSTITUTE

6A	Specification for Wellhead Equipment
6D	Specification for Pipeline Valve
597	Steel Venturi Gate Valves, Flanged or Buttwelding End
598	Valve Inspection and Test
600	Steel Gate Valve, Flanged or Buttwelding Ends
602	Compact Steel Gate Valves
603	150-Lb, Light-Wall, Corrosion-Resistant Gate Valve for Refinery Use
605	Large Diameter Carbon Steel Flanges

MSS STANDARD PRACTICES-MANUFACTURES STANDARDIZATION SOCIETY OF THE VALVE AND FITTINGS INDUSTRY.

SP-6	Finishes for Contact Faces of Connecting End-flanges of Ferrous Valves and Fittings
SP-9	Spot- Facing Standard
SP-25	Standard Making System for Valves, Fitting, Flanges and Unions
SP-42	150Lb Corrosion Resistant Cast Flanged Valves
SP-44	Steel Pipe Line Flanges
SP-45	Bypass and Drain Connection Standard
SP-53	Quality Standard for Steel Castings-Dry Particle Magnetic Inspection Method
Sp-54	Quality Standard for Steel Castings-Radiographic Inspection Method
Sp-55	Quality Standard for Steel Castings-Visual Method
SP-61	Hydrostatic Testing of Steel Valves
SP-67	Butterfly Valves
SP-81	Stainless Steel Knife Gate Valves
SP-82	Valve Pressure Testing Methods

GUIDE TO STORAGE, INSTALLATION & SERVICE

Ⅰ.STORAGE

1.Dongkang valves are thoroughly cleaned to remove fluids, rust and other foreign materials after testing and before shipping.
2.Plastic covers are pressed firmly in both ends to keep the valves clean. Do not remove plastic covers until ready to install.
3.Valves should be stored in a suitably sheltered place to prevent contamination by weather, dirt or dampness. Valves will eventually rust unless treated with a light oil coating, when stored for long periods of time.

Ⅱ.INSTALLATION

1.Make sure all piping and components are cleaned of dirt and foreign objects.
2.Install valves as indicated by the arrow forged on the valve body.
3.Install valves in a manner that will allow future service and ease of operaton.
4.Use hangers to support the weight of the valve and piping properly.
5.Keep valves in a partially open position during the welding process. Valves should be fully closed again after the welding process is completed.

Ⅲ.OPERATION

1.Valves are manually actuated by means of the handwheel-counterclockwise to open and clockwise to close.
2.Gate valves should be fully opened or fully closed.
Do not use gate valves in a throtting or modulating application.
3.Valves that do not require frequent opening and closing should have grease applied to the stem threads on a regular basis.
4.If a leakage starts in our valve, please follow this procedure.
a)Do not apply extra force to close the valve.
b)Open the valve fully, then close again. This usually away foreign materials on the seating surface.
c)If leakage still continues, after flushings(Step b), disassemble the valve, clean the seating surface and reassemble the valve.

Ⅳ.ADJUSTING GLAND PACKING

1.When trying the valve for the time in the piping, it is recommended to adjust the gland packing by tightening the gland bolt nut. Tighten the gland packing uniformly so as to stop leakage.
Over tightening can result in hard to turn the valve handwheel.
2.If tightning does not stop leakage around the stem, repacking should be considered at once.

NON-SLAM CHECK VALVE

TILTING TYPE & NOZZLE TYPE


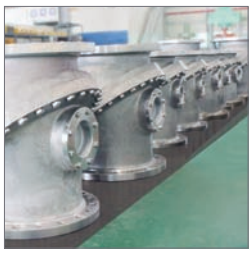

www.duocheck.co.kr
soosung@duocheck.co.kr

SSV SOOSUNG Valve

NON-SLAM
(TILTING TYPE)

Tilting disc check valve offers significant energy and cost savings over the life of the valve due to its large flow area and low head loss characteristics. Short disc travel from full open to full close provides the ability to close very rapidly or very slowly to avoid contributing to slamming and surges.

MODEL No. : TCV-1

FEATURES

Short disc stroke reduce water hammer
Disc counteraction has self cushioning movement

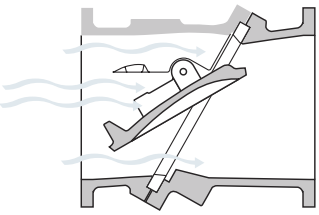

No-Slam Characteristics

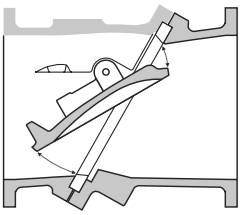

Unique disc movement

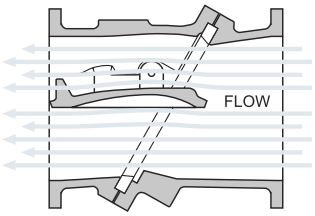

Laminar flow

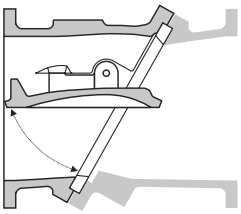

Rapid opening/ quicker closing

DESCRIPTION OF PARTS

NO.	PARTS NAME	MATERIALS	Q'ty
1	HINGE BODY	ASTM A890 Gr. 4A	1
2	SEAT BODY	ASTM A890 Gr. 4A	1
3	BODY SEAL O-RING	VITON	1
4	BODY FLANGE BOLT	A193-B8M	1set
5	SEAT RING	ASTM A890 Gr. 4A	1
6	SEAT RING O-RING	VITON	1
7	DISC	ASTM A890 Gr. 4A	1
8	INSPECTION HOLE COVER BOLT	ASTM A890 Gr. 4A	2
9	IN.HOLE COVER O-RING	VITON	2
10	IN.HOLE COVER BOLT	A193-B8M	2set
11	HINGE PIN	UNS S31803	2
12	HINGE PIN BUSH	UNS S31803	2
13	HINGE PIN COVER	ASTM A890 Gr. 4A	2
14	HINGE PIN COVER O-RING	VITON	2
15	HINGE PIN COVER BOLT	A193-B8M	2set
16	INDICATOR PIN	A193-B8M	1
17	INDICATOR SHAFT	UNS S31803	1
18	INDICATOR WASHER	A276-316	1
19	INDICATOR	A276-316	1
20	INDICATOR PLATE	A276-316	1
21	INDICATOR NUT	A276-316	1
22	INDICATOR O-RING	VITON	2
23	GREASE FITTING	A276-316	2
24	LOCATING PIN	A276-316	2
25	NAME PLATE	STAINLESS STEEL	1

*Available with various material based on customer's demand.

CHECK VALVE

SPECIFICATION

DESCRIPTION	METERIAL
PRESSURE / SIZE	ANSI 125LB~300LB (4"~60")
BODY, PLATE MATERIAL	A126 CL.B, A536 Gr 65-45-12, A216 WCB CA15, Stainless Steel, DUPLEX, MONEL
SPRING MATERIAL	STS316WPA, INCONEL X-750
VALVE TEST	API 598, ANSI B16.34,
FLANGES	ASME 16.5, B16.47, ANSI B16.1
END CONNECTION	FLANGE TYPE

APPLICATIONS

- PORTALE WATER
- WASTE WATER TREATMENT SYSTEM
- PRESSURIZED COOLANT SYSTEM
- POWER PLANT
- PUMP STATION

DRAWING

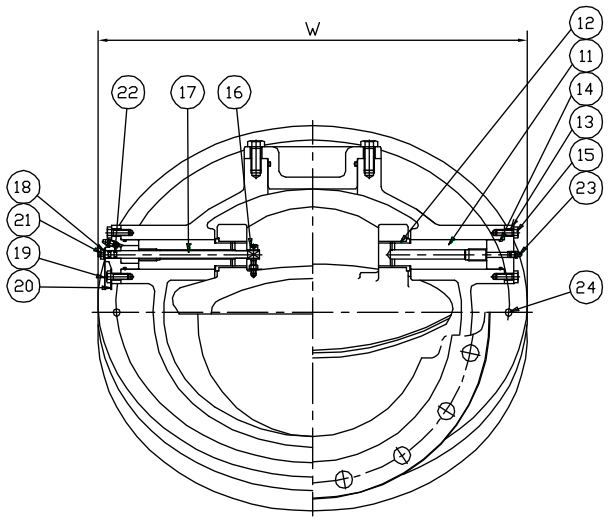

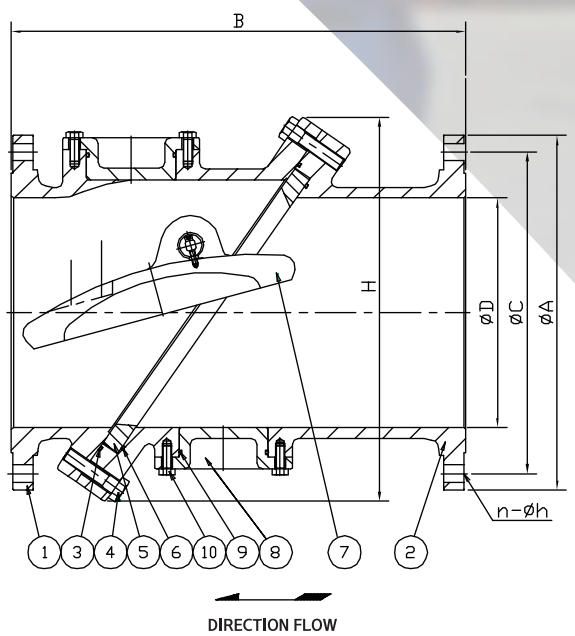

NON-SLAM
(NOZZLE TYPE)

MODEL NO. : NCV-1

APPLICATIONS

- GAS Transmission
  (Compressor Suction / Discharge)
- Power Generation
  (Cooling Water / Steam)
- Petrochemical Processing
- Water Transmission (Pump Station)

SPECIFICATION

DESCRIPTION	METERIAL
PRESSURE / SIZE	ANSI 125LB~2500LB (4"~60")
BODY, PLATE MATERIAL	A126 CL.B, A536 Gr 65-45-12, A216 WCB CA15, Stainless Steel, DUPLEX, MONEL
SPRING MATERIAL	STS316WPA, INCONEL X-750
VALVE TEST	API 598, ANSI B16.34
FLANGES	ASME 16.5, B16.47, ANSI B16.1
END CONNECTION	FLANGE TYPE

CHECK VALVE

Non-Slam Nozzle Check valves are specifically designed for fast-reversing systems where backflow is a constant concern. In such critical service applications, nozzle check valves offer the following benefits.

- Minimizes the damaging effects of water hammer in fluid systems
- Removal of chatter associated with conventional valves in reciprocating compressor service
- Protects rotating equipment from damage due to flow reversal
- Minimizes pressure loss in piping systems
- Provides quick dynamic response reducing reverse velocity

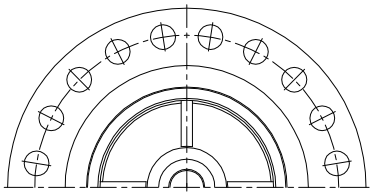

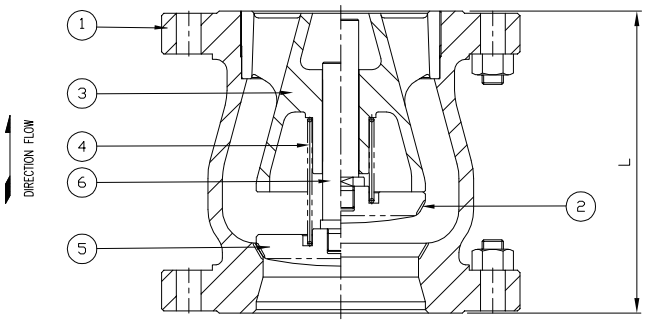

DESCRIPTION OF PARTS

NO.	PARTS NAME	MATERIALS	Q'ty
1	BODY	A126 CL.B, A536 Gr 65-45-12, A216 WCB CA15, Stainless Steel, DUPLEX, MONEL	1
2	DISC		1
3	DIFFUSER		1
4	SPRING	STS316WPA, INCONEL-X750	1
5	SEAT	METAL TO METAL	1
6	DISC STEM	STAINLESS STEEL , DUPLEX, MONEL	1

DIMENSION

NON-SLAM CHECK VALVE (TILTING TYPE)

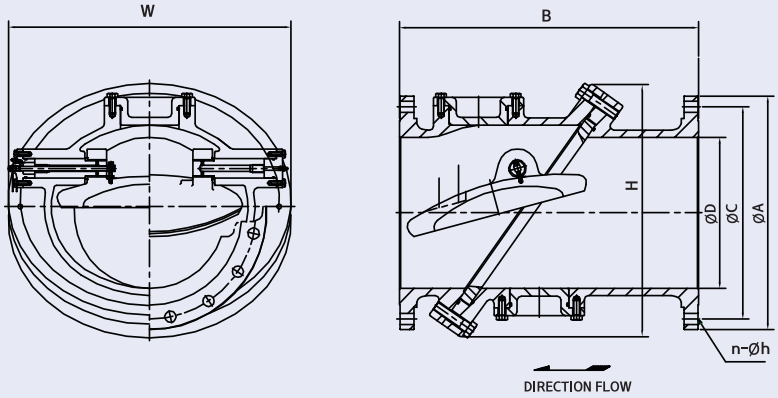

SIZE	Raiting	DIMENSIONS							Weight (Kg)
		ØA	B	ØC	ØD	H	W	n-Øh	
4"	125	230	292	191	100	254	330	8-3/4"	37
	150			190.5				8-3/4"	40
	300	255	317	200.0		273	362	8-7/8"	76
	600	275	432	215.9		327	406	8-1"	101
6"	125	280	381	241	150	330	406	8-7/8"	71
	150			241.3				8-7/8"	77
	300	320		269.9				12-7/8"	
	600	355	559	292.1		406	514	12-1 1/8"	196
8"	125	345	495	299	200	406	483	8-7/8"	134
	150			298.5				8-7/8"	142
	300	380	533	330.2		432	559	12-1"	207
	600	420	660	349.2		486	597	12-1 1/4"	329
10"	125	405	622	362	250	457	584	12-1"	196
	150			362.0				12-1"	214
	300	445	622	387.4		514	638	16-1 1/8"	304
	600	510	787	431.8		562	699	16-1 3/8"	469
12"	125	485	609	432	300	533	660	12-1"	282
	150			431.8				12-1"	305
	300	520	711	450.8		610	756	16-1 1/4"	467
	600	560	838	489.0		656	794	20-1 3/8"	667
14"	125	535	762	476	350	597	737	12-1 1/8"	404
	150			476.3				12-1 1/8"	433
	300	585	762	514.4		632	768	20-1 1/4"	565
	600	605	889	527.0		695	841	20-1 1/2"	830
16"	125	595	762	540	400	711	813	16-1 1/8"	526
	150			539.8				16-1 1/8"	570
	300	650	838	571.5		706	813	20-1 3/8"	769
	600	685	991	603.2		756	917	20-1 5/8"	1157

SIZE	Raiting	DIMENSIONS							Weight (Kg)
		ØA	B	ØC	ØD	H	W	n-Øh	
18"	125	635	838	578	450	762	914	16-1 1/4"	639
	150			577.9				16-1 1/4"	685
	300	710	914	628.6		781	1003	24-1 3/8"	989
	600	745	1092	654.0		870	1086	20-1 3/4"	1619
20"	125	700	813	635	500	813	991	20-1 1/4"	779
	150			635.0				20-1 1/4"	844
	300	775	990	685.8		826	1035	24-1 3/8"	1201
	600	815	1194	723.9		953	1165	24-1 3/4"	2180
24"	125	815	965	749	600	940	1169	20-1 3/8"	1224
	150			749.3				20-1 3/8"	1327
	300	915	1143	812.8		953	1149	24-1 5/8"	1846
	600	940	1397	838.2		1111	1353	24-2"	3261
30"	125	985	1321	914	750	1143	1397	28-1 3/8"	2223
	150			914.4				28-1 3/8"	2409
	300	1090	1371	997.0		1130	1365	28-1 7/8"	2812
	600	1130	1499	1022.4		1235	1524	28-2 1/8"	3141
36"	125	1170	1511	1086	900	1296	1651	32-1 5/8"	3402
	150			1085.8				32-1 5/8"	3692
	300	1270	1524	1168.4		1432	1727	32-2 1/8"	5377
42"	125	1345	1588	1257	1050	1499	1854	36-1 5/8"	4763
	150			1257.3				36-1 5/8"	5171
48"	125	1510	1651	1422	1200	1753	2083	44-1 5/8"	6260
	150			1422.4				44-1 5/8"	6804
54"	125	1685	1981	1594	1350	1905	2311	44-2"	7938
	150			1593.8				44-1 7/8"	8618
60"	125	1855	2210	1759	1500	2191	2337	52-2"	10433
	150			1759.0				52-1 7/8"	11340

valve size	4", 6", 8" .....24"	26", 28",30" .....60"
Flange Standard	ANSI B16.1 (125LB) ANSI B16.5 (150LB)	ANSI B16.1 (125LB) ASME B16.47 SERIES A (150LB)

DIMENSION

NON-SLAM CHECK VALVE (NOZZLE TYPE)

SIZE	Rating (RF)	L(mm) (short pattern)	Weight (Kg)	SIZE	Rating (RF)	L(mm) (short pattern)	Weight (Kg)	SIZE	Rating (RF)	L(mm) (short pattern)	Weight (Kg)
2"	150	203	10	14"	150	475	347	32"	150	1080	2130
	300	267	13		300	475	445		300	1080	2860
	600	292	17		600	475	538				
	900	368	36		900	473	695				
	1500	368	36		1500	648	1600				
	2500	451	52								
3"	150	241	30	16"	150	545	415	36"	150	1215	2605
	300	318	30		300	545	530		300	1215	3670
	600	356	30		600	545	790		600	1215	4500
	900	381	55		900	750	1220		900	1190	7250
	1500	470	78		1500	750	1840				
	2500	578	119								
4"	150	292	48	18"	150	610	538	42"	150	1415	4100
	300	356	48		300	610	690		300	1415	5620
	600	432	74		600	610	1355		600	1461	6584
	900	457	100		900	775	1440		900	1524	9920
	1500	546	123		1500	813	2700				
	2500	673	168								
6"	150	356	76	20"	150	850	1075	48"	150	1461	5275
	300	254	88		300	810	1090		300	1461	5325
	600	390	169		600	810	1380		600	1615	10250
	900	391	193		900	869	2120		900	1626	14400
	1500	403	270		1500	869	2950				
	2500	403	485								
8"	150	495	194	24"	150	810	1310	54"	150	1850	9450
	300	311	190		300	810	1370		300	1850	10140
	600	311	203		600	810	1935		600	1829	12400
	900	346	290		900	1016	3182				
	1500	346	365		1500	869	5190				
	2500	449	700								
10"	150	365	220	28"	150	945	1560	60"	150	2035	10800
	300	365	248		300	1035	2200		300	2035	11100
	600	365	335		600	870	2660		600	2159	18500
	900	394	483		900	1016	4650				
	1500	394	628								
	2500	562	1227								
12"	150	438	282	30"	150	1010	1965				
	300	438	305		300	1010	2394				
	600	438	426		600	1010	3000				
	900	457	675		900	1026	4750				
	1500	457	900								
	2500	914	2073								
valve size	2", 3", 4" .....24"				26", 28" .....60"						
Flange Standard	ANSI B16.5				ASME B16.47 SERIES A (MSS SP44)						

INTERNATIONAL QUALITY CERTIFICATES

SOOSUNG Valve

SOOSUNG VALVE Ind. Co., Ltd.
14B-7L, GEOMDAN INDUSTRIAL COMPLEX, SEO-GU, INCHEON, KOREA
TEL : 82 32 569 4230 FAX: 82 32 569 4234

www.duocheck.co.kr E-mail: soosung@duocheck.co.kr

www.valve-korea.com

One Stop Solution Of Quality Valves

PLUG VALVE

PLUG VALVE

SSV corporation

New Plug Valves

Non-Lubricated

Extended Packing Plug Valves

Lined Plug Valves

Sleeved Plug Valves

Double Block & Bleed Plug Valves

Lubricated Plug Valves

PLUG VALVES HOW TO ORDER

■ **EXAMPLE** : PLUG VALVE, FIG P250J, PJ 316 / 316 /304-12″G

P	VALVE TYPE	2	PORT TYPE	5	CLASS	0	END TYPE	J	OPTION(Ⅰ)	PJ	OPTION(Ⅱ)
P	PLUG VALVE	2	2-WAY	5	ANSI 150	0	FLANGED END	N/A	ANSI	PJ	PARTIAL JACKET
B	BALL CHECK VALVE	3	3-WAY	3	ANSI 300	L	LINED TYPE	J	JIS	FJ	FULL JACKET
S	SWING CHECK VALVE	4	4-WAY	6	ANSI 600	0F	FULL BORE	DIN	DIN	CV	CONTROL VALVES
		5	5-WAY	9	ANSI 900	0M	METAL SEATED				
				15	ANSI 1500	0L	LUBRICATED				
				5	JIS10K	0BW	BUTT WELD				
				3	JIS20K	0SC	SCREW TYPE				
				6	JIS40K	0SW	SOCKET TYPE				
				9	JIS63K	DBB	DOUBLE BLOCK & BLEED TYPE				

316	BODY MATERIAL	316	PLUG MATERIAL	304	OPTION MATERIAL	12″ SIZE	G	OPERATOR
WCB	WCB	WCB	WCB	304	SUS304	1/2″	N/A	WRENCH TYPE
304	CF8	304	CF8	316	SUS 316	3/4″	G	WORM GEAR TYPE
316	CF8M	316	CF8M	A283	A283 Gr.C	1″		
A20	CN7M	A20	CN7M			1.1/2″		
CD4M	CD4MCU	CD4M	CD4MCU			2″		
304L	CF3	304L	CF3			2.1/2″		
316L	CF3M	316L	CF3M			3″		
MO	MONEL	MO	MONEL			4″		
						5″		
HC	HASTELLOY C	HC	HASTELLOY C			6″		
TI	TITANIUM	TI	TITANIUM			8″		
PFA	PFA LINED	PFA	PFA LINED			10″		
						12″		
						14″		
						18″		
						20″		
						24″		

OS VALVE

TEFLON SLEEVED PLUG VALVES

TEFLON SLEEVED PLUG VALVES

Non-Lubricated

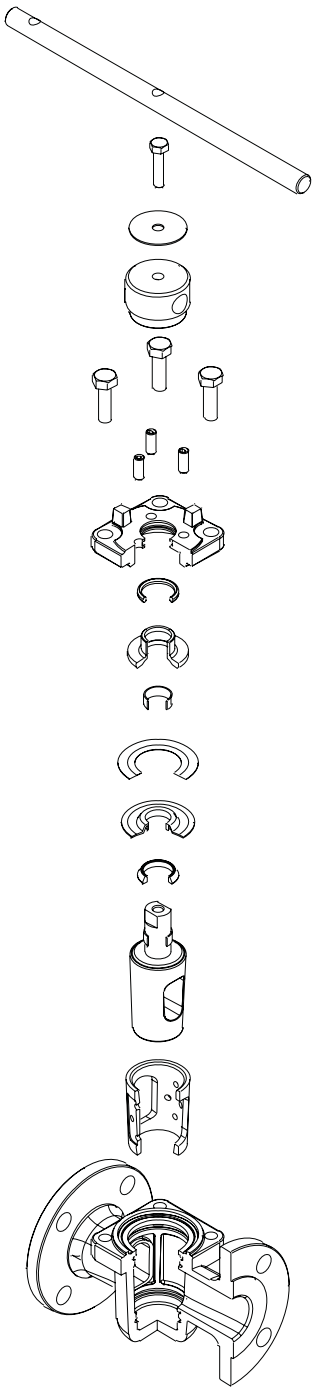

■ PART OF STANDARD MATERIAL

NO	DESCRIPTION	MATERIAL	SPECIFICATION
1	WRENCH	CARBON STEEL	1045. PAINTED
2	HUB BOLT	CARBON STEEL	SUS304
3	NAME PLATE	STAINLESS STEEL	SUS304
4	HUB	CARBON STEEL	ASTM A216 WCB
5	COVER BOLT	STAINLESS STEEL	SUS304
6	ADJUSTING BOLT	STAINLESS STEEL	SUS304
7	COVER	STAINLESS STEEL	
8	O-RING	VITON	
9	THRUST COLLAR	STAINLESS STEEL	SUS304
10	ANSTATIC BEARING	RTFE	
11	METAL DIAPHRAGM	STAINLESS STEEL	SUS304
12	PTFE DIAPHRAGM	RTFE	
13	WEDGE RING	RTFE	
14	PLUG	STAINLESS STEEL	ASTM A351 CF8M
15	SLEEVE	RTFE	
16	BODY	STAINLESS STEEL	ASTM A351 CF8M

TEFLON SLEEVED PLUG VALVES

Non-Lubricated

▶ Design more economical, flexible, and compact fluid handing systems.

Bi-directional flow, simple actuation, light weight, compact design, and multi-port configurations all facililated by an improved system design.

▶ Superior, Longer-lasting in-Line Sealing

The PTFE sleeve completely surrounds the plug. The sleeve provides a large, circumferential sealing surface from port to port. Open, closed, or rotating, the seal is assured. No ball or gate valve can match this sealing power.

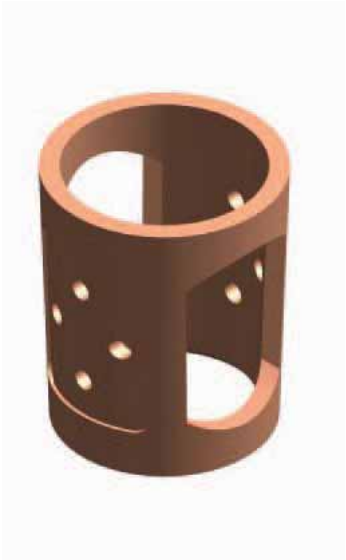

▶ Secure sealing with no cold-flow, deformation blow-out, or rotating of the sleeve

The sleeve is securely/safely nestled in the valve body. High-pressure ribs, top and bottom retention, and 360 degree port lips all assure sleeve containment.

▶ No seizing. No sticking

As the plug rotates, the 360 degree lips provide a self cleaning action to remove scaling and adhering media.

▶ No cavities. No contamination.

There are no body cavities where flow media can accumulate and contaminate future processing. The cavity-free design also prevents sticking.

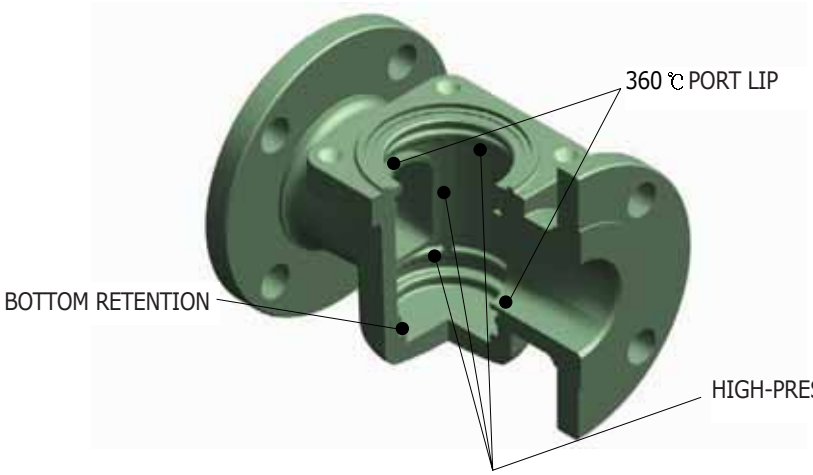

TOP SEAL STRUCTURE OF TEFLON SLEEVED PLUG VALVES

Non-Lubricated

WEATHER PROOF TYPE

WEATHER PROOF O-RING WILL PREVENT ANY PENETRATION OF RAIN OR FLUID FROM THE OUTSIDE OF THE VALVE AND THEREFORE NO OXIDATION OCCURS AT THE INSIDE OF THE VALVE.

THE ANTISTATIC THRUST COLLAR

3-POINT STANDED THRUST COLLAR HOLDS THE STEM TIGHTLY AND PUSHES THE DIAPHARAM WITH DEFINED PRESSURE.
HOLD THE STEM TIGHTLY AND REMOVES ANY STATIC ELECRICITY BUILT UP INSIDE THE VALVE.

THE FOURTHLY SEAL

THE SPECIALLY DESIGNED LIP STRUCTURE OF THE TEFLON DIAPHRAGM WILL PREVENT ANY LEAKAGE FROM THE TOP OF THE PLUG.

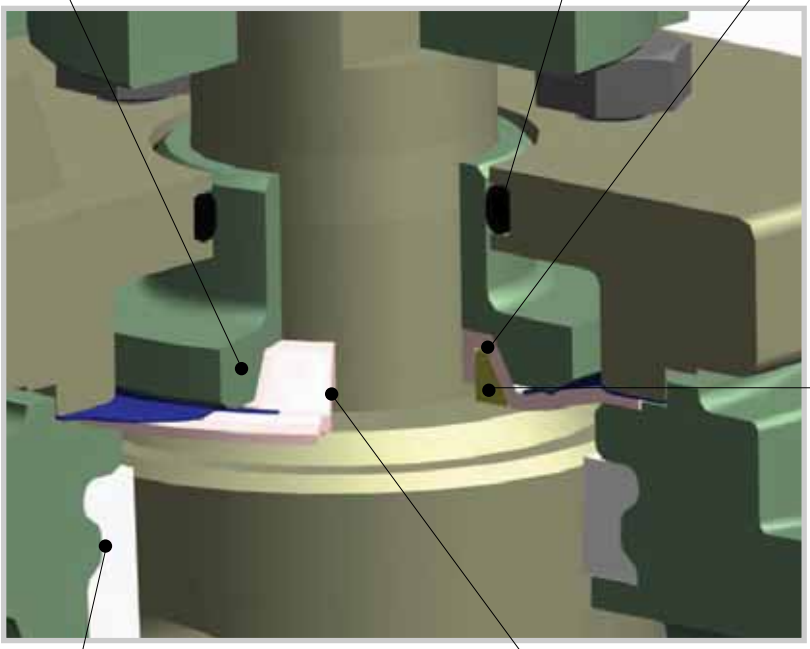

THE TERTIARY SEAL

RTFE TEFLON WEDGE RING AND PLUG FIT TIGHTLY

THE PRIMARY SEAL

THE TOUCHED FACE BETWEEN THE TEFLON SLEEVE AND THE PLUG WILL NOT ALLOW ANY LEAKAGE OF FLOW MEDIA

THE SECONDARY SEAL

THE SPECIALLY DESIGNED LIP STRUCTURE OF THE TEFLON DIAPHRAGM WILL HOLD THE STEM MORE TIGHTLY WITH ANY LEAKED GAS OR FLUID FROM THE TOP OF PLUG.

SLEEVED PLUG VALVES

Non-Lubricated

FIG P250 316/316
SLEEVED PLUG VALVES

SLEEVED PLUG VALVE's Characteristic and Merits

1. Completely no leakage.

① PLUG & apered pipe of the Teflon Sleeve use the contact method, giving absolutely no leakage problems compared to other Process Valves.

② Stem seal structure has secured the security design and gives absolutely no leakage characteristic of magnet powered type.

③ Water proof type characteristic has been added. The steam seal parts of the products of other enterprises leak and after long usage, corrosion takes place in the sealing but our product has used the sealing structure in the stem part and the covering part which gives absolutely no leakages for longtime use eventually increasing the life span of the product. (Top seal structure)

2. No extra space in the valve.

The passage way of the valve has no extra space like other process valves allowing full control and open/close function, semi-permanent life span.

3. No need of maintenance and repair

Having no extra space, there is no worry that moving materials might clog up inside the pipe.

① The seal pressure made by the abrasion of the Teflon sleeve is recontrolled by the cover of ADJ. Bolt for semipermanent sealing.

② Inside the body of the port is a Metal lib with Self-cleaning function which can control all sticky and solid materials.

③ Top entry type allowing maintenance in on-line status possible. Valve which doesn't need much maintenance.

Non-Lubricated Type

Material - Body, Plug
WCB, LCB, 304, 304L, 316, 316L, A20, CD4M, HB, HC, MO, INCONEL, TI, ZR

Sleeve Material - PTFE, RTFE(GLASS, BRASS, GRAPHITE), TFM

SIZE 1/2″ ~ 24″

Use Temperature - 50℃ ~ 230℃

Main Fluid : Toxic, Flammable, Explosive Fluid Line and No-leakage required Line

TEFLON SLEEVED PLUG VALVES

P250 Flanged ANSI class 150

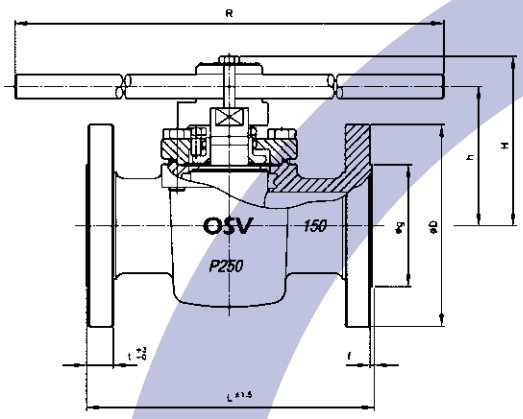

1/2″ THRU 4″

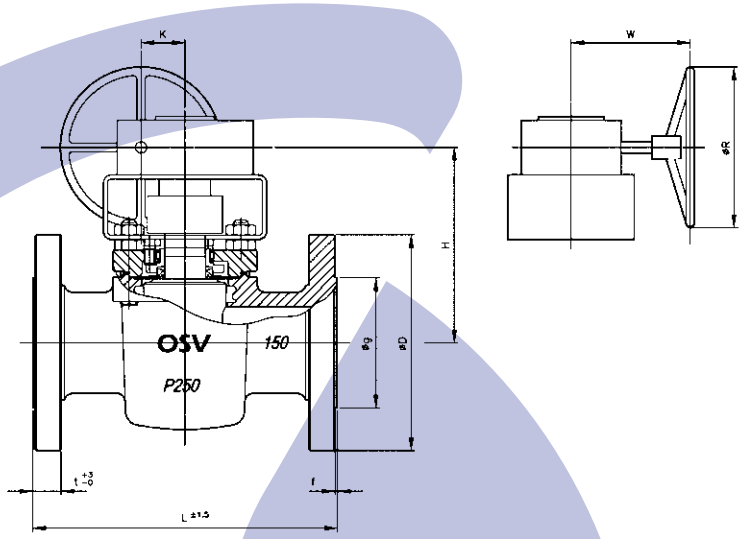

4″ & 6″ OVER

DIMENSIONS

UNIT : MM

			END FLANGES													
							BOLT HOLE									
IN	MM	L	D	g	t	f	PCD	N	d	h	H	R	K	W	OPERATOR	REMARK
1/2	15	108	89	35	9.7	1.6	60.5	4	16	80	-	180	-	-	WITH	
3/4	20	117	98	43	10.4	1.6	70.0	4	16	80	-	180	-	-	WRENCH	
1	25	127	108	51	11.2	1.6	79.5	4	16	75	96	222	-	-		
1.1/2	40	165	127	73	14.2	1.6	98.5	4	16	91	116	320	-	-		
2	50	178	152	92	15.8	1.6	120.5	4	19	106	130	460	-	-		
2.1/2	65	190	178	105	17.5	1.6	139.5	4	19	121	145	600	-	-		
3	80	203	190	127	19.1	1.6	152.5	4	19	121	145	600	-	-		
4	100	229	229	157	23.9	1.6	190.5	8	19	150	178	750	-	-		
4	100	229	229	157	23.9	1.6	190.5	8	19	-	233	250	53	177	WITH	
6	150	267	279	216	25.4	1.6	241.5	8	22	-	260	300	62.5	228	WORM	
8	200	292	343	270	28.6	1.6	298.5	8	22	-	343	300	62.5	228	GEAR	
10	250	330	406	324	30.2	1.6	362.0	12	25	-	374	500	91.5	297		
12	300	356	483	381	31.8	1.6	432.0	12	25	-	464	560	113	330		
14	350	381	533	413	35.1	1.6	476.0	12	29	-	575	630	153	370		
16	400	762	597	470	36.6	1.6	539.5	16	29	-	615	560	113	360		
18	450	864	635	533	39.7	1.6	578.0	16	32	-	725	630	153	420		
20	500	914	698	584	42.9	1.6	635.0	20	32	-	829	800	235	552		
24	600	1067	813	692	52.4	1.6	749.5	20	35	-	885	900	281	602		

TEFLON SLEEVED PLUG VALVES

P230 Flanged ANSI class 300

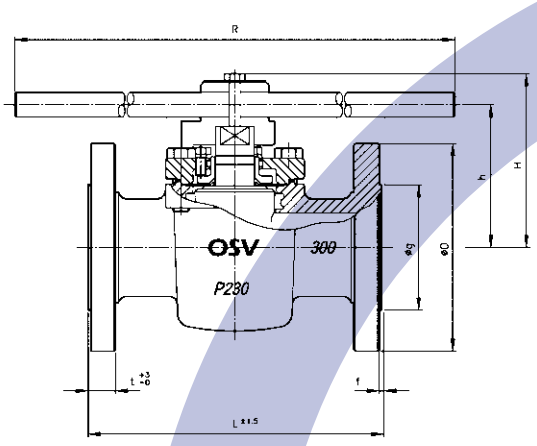

1/2″ THRU 4″

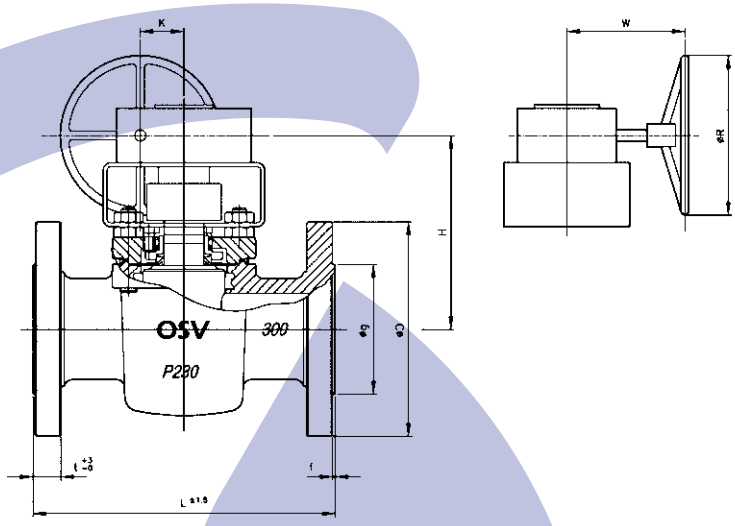

4″ & 6″ OVER

DIMENSIONS

UNIT : MM

			END FLANGES													
							BOLT HOLE									
IN	MM	L	D	g	t	f	PCD	N	d	h	H	R	K	W	OPERATOR	REMARK
1/2	15	140	95	35	14.3	1.6	66.5	4	16	80	-	180	-	-	WITH	
3/4	20	152	117	43	15.9	1.6	82.5	4	19	80	-	180	-	-	WRENCH	
1	25	165	124	51	17.5	1.6	89.0	4	19	75	96	222	-	-		
1.1/2	40	190	156	73	20.7	1.6	114.5	4	22	91	116	320	-	-		
2	50	216	165	92	22.3	1.6	127.0	8	19	106	130	460	-	-		
2.1/2	65	241	190	105	25.4	1.6	149.0	8	22	121	145	600	-	-		
3	80	283	210	127	28.6	1.6	168.0	8	22	121	145	600	-	-		
4	100	305	254	157	31.8	1.6	200.0	8	22	150	178	750	-	-		
4	100	305	254	157	31.8	1.6	200.0	8	22	-	233	250	53	177	WITH	
6	150	403	318	216	36.6	1.6	270.0	12	22	-	260	300	62.5	228	WORM	
8	200	419	381	270	41.3	1.6	330.0	12	22	-	343	300	62.5	228	GEAR	
10	250	457	444	324	47.7	1.6	387.5	16	29	-	374	500	91.5	297		
12	300	502	521	381	50.8	1.6	451.0	16	32	-	464	560	113	330		
14	350	762	584	413	54.0	1.6	514.5	20	32	-	575	630	153	370		
16	400	838	648	470	57.2	1.6	571.5	20	35	-	615	560	113	360		
18	450	914	711	533	60.4	1.6	628.5	24	35	-	725	630	153	420		
20	500	991	775	584	63.5	1.6	686.0	24	35	-	829	800	235	552		
24	600	1143	914	692	69.9	1.6	812.8	24	41	-	885	900	281	602		

TEFLON SLEEVED PLUG VALVES

P260 Flanged ANSI class 600

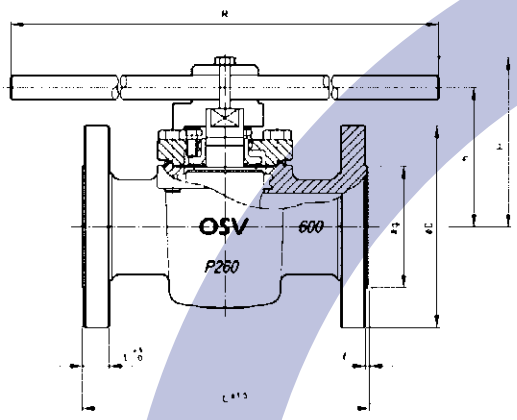

1/2″ THRU 4″

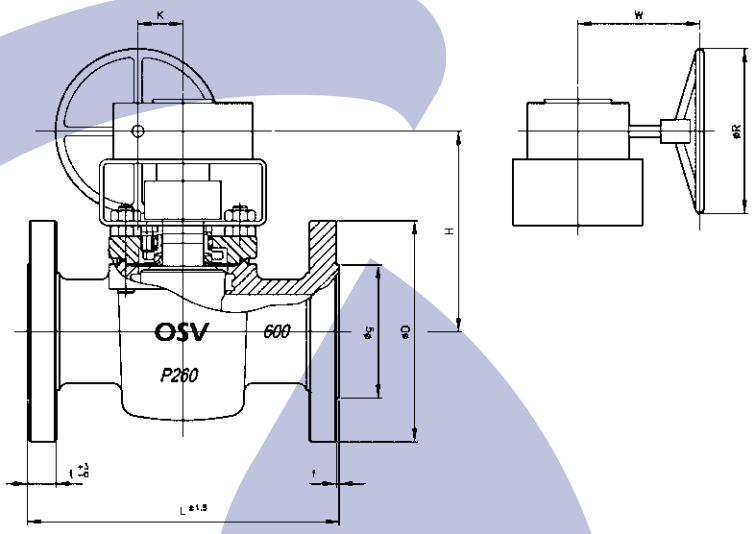

4″ & 6″ OVER

DIMENSIONS

UNIT : MM

			END FLANGES													
							BOLT HOLE									
IN	MM	L	D	g	t	f	PCD	N	d	h	H	R	K	W	OPERATOR	REMARK
1/2	15	165	95	35	20.7	6.4	66.5	4	16	80	-	180	-	-	WITH	
3/4	20	190	117	43	22.3	6.4	82.5	4	19	80	-	180	-	-		
1	25	216	124	51	23.9	6.4	89.0	4	19	75	96	222	-	-		
1.1/2	40	241	156	73	28.7	6.4	114.5	4	22	91	116	320	-	-		
2	50	292	165	92	31.8	6.4	127.0	8	19	106	130	460	-	-		
2.1/2	65	330	190	105	35.0	6.4	149.0	8	22	121	145	600	-	-		
3	80	356	210	127	38.1	6.4	168.0	8	22	121	145	600	-	-		
4	100	432	273	157	44.5	6.4	216.0	8	25	150	178	750	-	-		
4	100	432	273	157	44.5	6.4	216.0	8	25	-	233	250	53	177	WITH	
6	150	559	356	216	54.1	6.4	292.0	12	29	-	260	300	62.5	228	WORM	
8	200	660	419	270	62.0	6.4	349.0	12	32	-	343	300	62.5	228	GEAR	
10	250	787	508	324	69.9	6.4	432.0	16	35	-	374	500	91.5	297		
12	300	838	559	381	73.1	6.4	489.0	20	35	-	464	560	113	330		

NOTES

1. Pressure 900# and above size 12 inch of 600# and above 900#, 1500#,2500# should be made case by case.
2. JIS standard table drawing will be released by OSV separately, when required by the client.

TEFLON SLEEVED JACKETED PLUG VALVES

Non-Lubricated

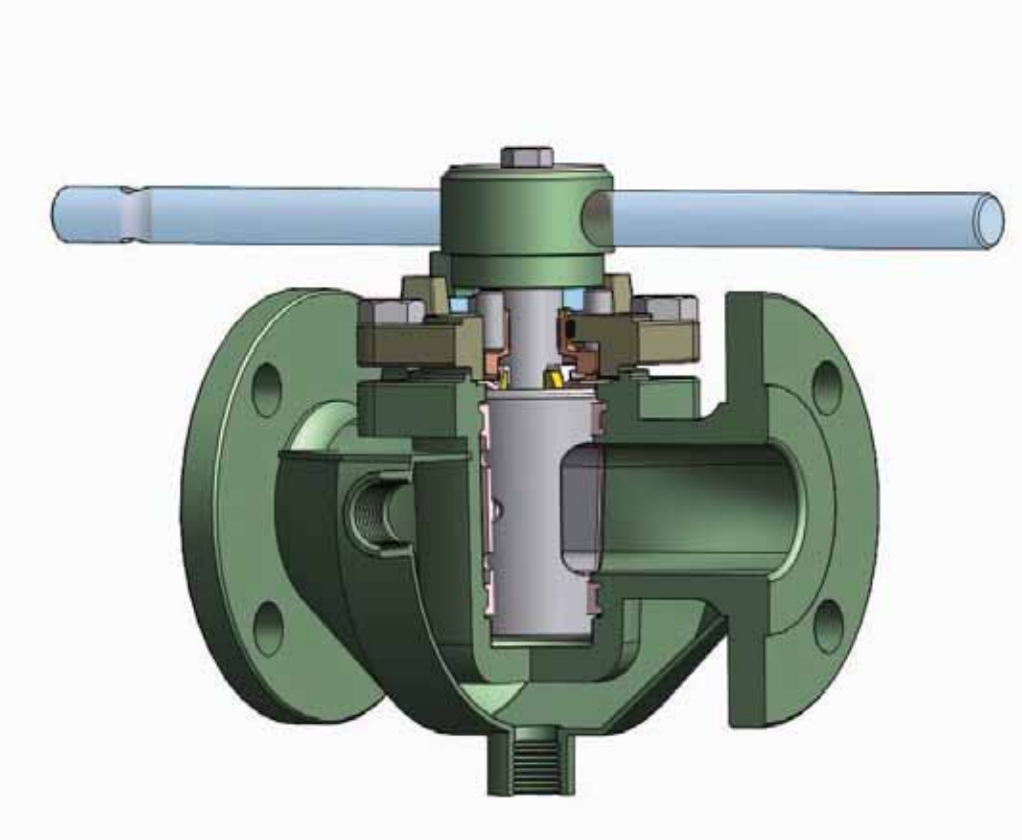

FIG. P250PJ 316/316/304
TEFLON SLEEVED JACKETED PLUG VALVES

Non-Lubricated Type

Jacket Type Partical Jacket, Full Jacket

Material - Body, Plug
WCB, LCB, 304, 304L, 316, 316L, A20, CD4M, HB, HC, MO, INCONEL, TI, ZR

Sleeve Material - PTFE, RTFE(GLASS, BRASS, GRAPHITE), TFM

Jacket Carbon Steel, Stainless Steel

Size 1/2″ ~ 24″

Use Temperature -50℃~230℃

MULTI PORT TEFLON SLEEVED PLUG VALVES

Non-Lubricated

3-Way PLUG VALVES

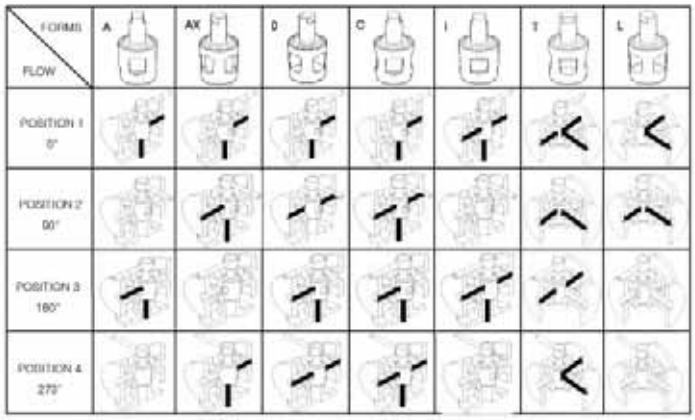

3-Way Port arrangement

4-Way PLUG VALVES

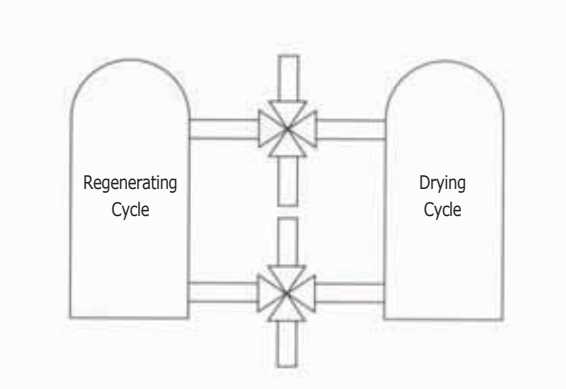

5-Way PLUG VALVES

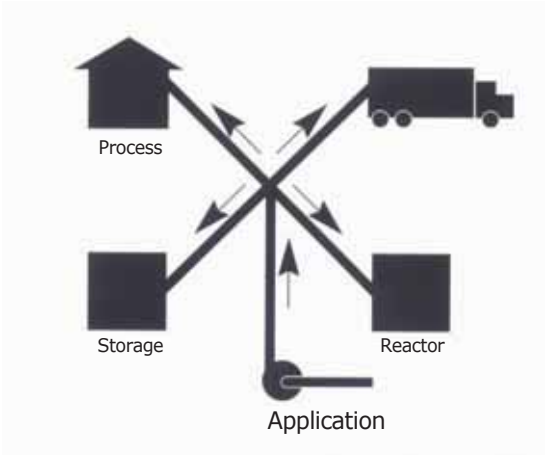

SCREW & WELD ENDS TEFLON SLEEVED PLUG VALVES

Non-Lubricated

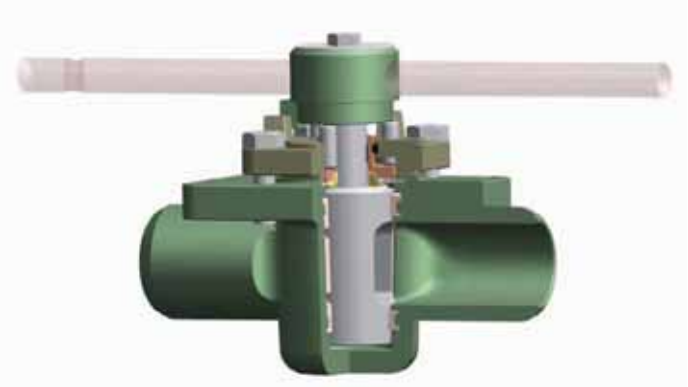

FIG. P260N BW 316/316
BUTT WELD ENDS NUCLEAR PLUG VALVES
2-WAY CLASS 150#, 300#, 600#
JIS 10K, 20K, 40K
1/2″ ~ 8″

FIG. P250SC 316/316
SCREW ENDS PLUG VALVES
2-WAY, CLASS 150#, 300#, 600#
JIS 10K, 20K, 40K
1/2″ ~ 2″

FIG. P250SW 316/316
SOCKET WELD PLUG VALVES
2-WAY, CLASS 150#, 300#, 600#
JIS 10K, 20K, 40K
1/2″ ~ 8″

FIG. P250BW 316/316
BUTT WELD ENDS PLUG VALVES
2-WAY, CLASS 150#, 300#, 600#
JIS 10K, 20K, 40K
1/2″ ~ 12″

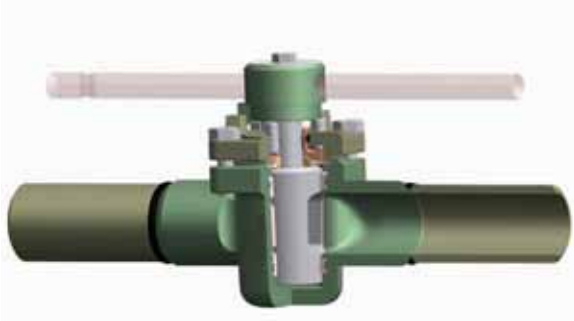

FIG. P250BW 316/316
PUPS WELD ENDS PLUG VALVES
2-WAY, CLASS 150#, 300#, 600#
JIS 10K, 20K, 40K
1/2″ ~ 12″

EXTENDED PLUG VALVES

Non-Lubricated

FIG. P250EP WCB/316

EXTENDED PACKING TYPE PLUG VALVES

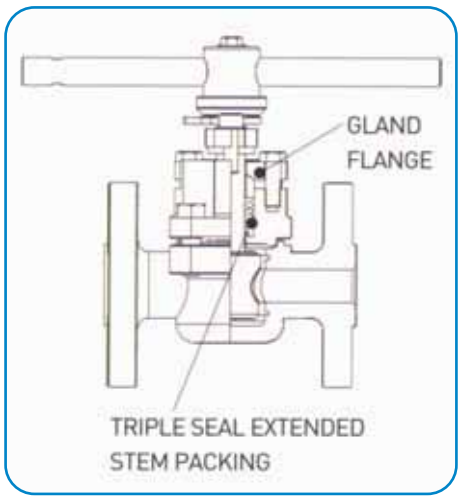

◆ Feature

- Extended triple seal stem packing type. Easy to choose the kinds and material of packing. (Graphite, PTFE V-Packing, VOC packing etc.)
- Leakproof semi-permanent structure though equally pressured Triple Seal Stem Packing by Gland flange.
- Various and steady Leaking Prevention by Steam Sealing.
- Usable as Live Loaded Extended Packing by using Plate
- Spring with an Option to use Gland Flange Bolt to do triple sealing against varying temperatures effectively.
- Able to prevent stern requirements for leaking prevention and control the requirements for sealing economically.

◆ Advantages

1. Completely No Leakage.

① As the tapered Plug and Teflon Sleeve contact face to face, it gives absolutely no leakage.

② A Steam Seal Structure has been designed to complement the controversial point of other plug valves.

③ As the Steam Seal is not exposed externally it doesn't rust/oxidate and is able to increase life span. (Weather Proof Type)

2. No Dead Space

No dead space in the fluid way can allow full control of open/close function and gives semi-permanent life span.

3. Few Maintenance and Repair needed

① No dead space is present, which prevents fluid to be clogged up.

② Re-adjusting of Seal Pressure by using Adjusting-Bolt After abrasion of Teflon Sleeve gives semi-permanent sealing function

③ Metal lib around the Port has a Self-Cleaning function to control steamy and solid material liquid.

④ Top Entry type gives the possiblity to be repaired on-line.

METAL SEATED PLUG VALVES

Non-Lubricated Type

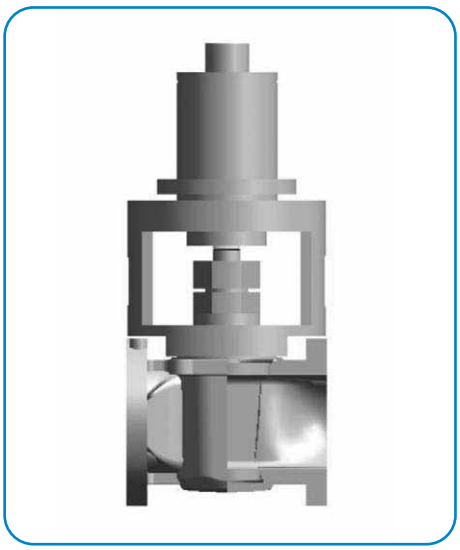

FIG. P250M 316/316

METAL SEATED PLUG VALVES

OSV METAL SEATED PLUG VALVES

- **Non-Lubricated Lift & Turn Type**
- **Type** Standard Bore
- **Material** Body, Plug : 304, 304L, 316, 316L, A20, CD4M, MONEL
- **Size** 1/2″~ 12″
- **Class** ANSI #150, 300, 600
  JIS 10K, 20K, 40K
- **Temperature** below -50℃, 300℃ ~ 700℃
- **End Connection** SCR(PT, NPT), BW, SW, FF, RF, LMF, T&G
- **Use**

High and Low temperature like PA, RFCC, Heat Medium, Tar, LPG or the place which needs Zero Leakage, Zero Maintenance eith Fire Safe function required Process.

◆ Feature

- **Structure** : Similar with Sleeve type Plug valves but like Lined Type
  1) Operation with No Leakage, 2) No Dead-Space, 3) No Maintenance
- **Non Lubricate type**

This is a Non-Lubricate type, Metal seat type. Therefore it doesn't need Lubricant. Also it is able to prevent any contamination in Line which is available to manege line clearly. Putting tapered metal plug in to Metal seat (which was nestled in the body) can achieve perfect sealing. Opening the valve is done by lifting Tapered plug up slightly and turn in one quarter. Valve closure is done in the reverse way of opening the valve, which is operated by unique mechanism. Thus operation doesn't need any force and makes open and closure available absolutely anytime. OSV also has Trunnion type plug valves which attain our product range wide.

- **Credibility of basic sealing : different with ball valves, since Plug valves form sealing by mechanical structure and equipments, plug valves aren't affected by line pressure at all.**

Tapered plug prevents absolutely all leakage without a valve bonnet in a wat similar to a cork stopper of wine. This means absolute zero leakage. Since ball valves don't have a basic sealing by there structure, they are rather weak for leakage problems with its floating system.

- **Application for high and low temperature.** OSV Metal Seated Valve can easily apply to high and low temperature. Selecting adequate valve material for specific temperature conditions should be consulted with OSV
- **Application for high pressure and high vacuum fluid.** OSV plug valves, including but not limited to OSV Metal Seated Valves, have a perfect sealing system. Any other metal valves including ball valves can assure zero leakage at all. To review detail advantages of OS valves, please refer to OSV Teflon Sleeved Plug Valves or Teflon Lined Valves explanations.

OSV PLUG VALVES for OPERATING TORQUE

1. PURPOSE

The purpose of this procedure is to prescribe allowble Break torque, Running torque and Seating torque for On-Off operation by measuring of working rate of PTFE Sleeved Plug Valves.

2. SCOPE

This procedure is applicable to the OSV Sleeved Plug Valve from 1/2″ to 18″

3. ALLOWABLE TORQUE

VALVE SIZE	BREAK TORQUE		RUNNING TORQUE		SEATING TORQUE		REMARKS
	IN · LBS	KG · M	IN · LBS	KG · M	IN · LBS	KG · M	
1/2″	140	1.6	70	0.8	80	0.9	
3/4″	140	1.6	70	0.8	80	0.9	
1″	400	4.6	200	2.3	250	2.9	
1.1/2″	800	9.2	400	4.6	500	5.8	
2″	1100	12.8	550	6.4	650	7.5	
3′	1200	13.8	600	6.9	700	8	
4″	2400	27.6	1200	13.8	1450	16.7	
6″	5000	57.6	2500	28.8	3000	34.5	
8″	7800	89.9	3900	44.9	4700	54.1	
10″	14400	165.8	7200	82.9	8600	98.9	
12″	21000	241.6	10500	120.8	12600	144.9	
14″	(32600)	(365.6)	(16300)	(181.3)	(19500)	(224.3)	
16″	(65300)	(725.2)	(32600)	(362.6)	(39000)	(448.9)	
18″	(130000)	(1450.1)	(65000)	(725.2)	(78000)	(879.0)	

OS VALVE

TEFLON LINED PLUG VALVES

TEFLON LINED PLUG VALVES

Non-Lubricated

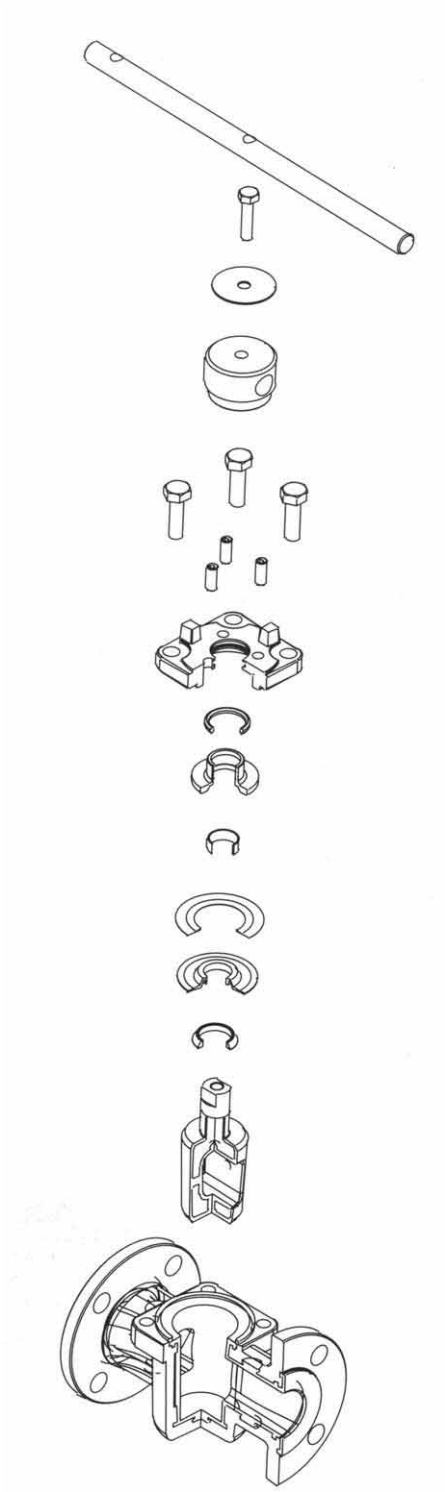

▪ PART OF STANDARD MATERIAL

NO	DESCRIPTION	MATERIAL	SPECIFICATION
1	WRENCH	CARBON STEEL	1045. PAINTED
2	HUB BOLT	CARBON STEEL	SUS304
3	NAME PLATE	STAINLESS STEEL	SUS304
4	HUB	CARBON STEEL	ASTM A216 WCB
5	COVER BOLT	STAINLESS STEEL	ASTM A193 B7
6	ADJUSTING BOLT	STAINLESS STEEL	SUS304
7	COVER	CARBON STEEL	ASTM A216 WCB
8	O-RING	VITON	
9	THRUST COLLAR	STAINLESS STEEL	SUS304
10	ANSTATIC BEARING	RTFE	
11	METAL DIAPHRAGM	STAINLESS STEEL	SUS304
12	PTFE DIAPHRAGM	RTFE	
13	WEDGE RING	RTFE	
14	PLUG	CAST STL PFA LINED	ASTM A216 WCB
15	BODY	CAST STL PFA LINED	ASTM A216 WCB

TEFLON LINED PLUG VALVES

Non-Lubricated

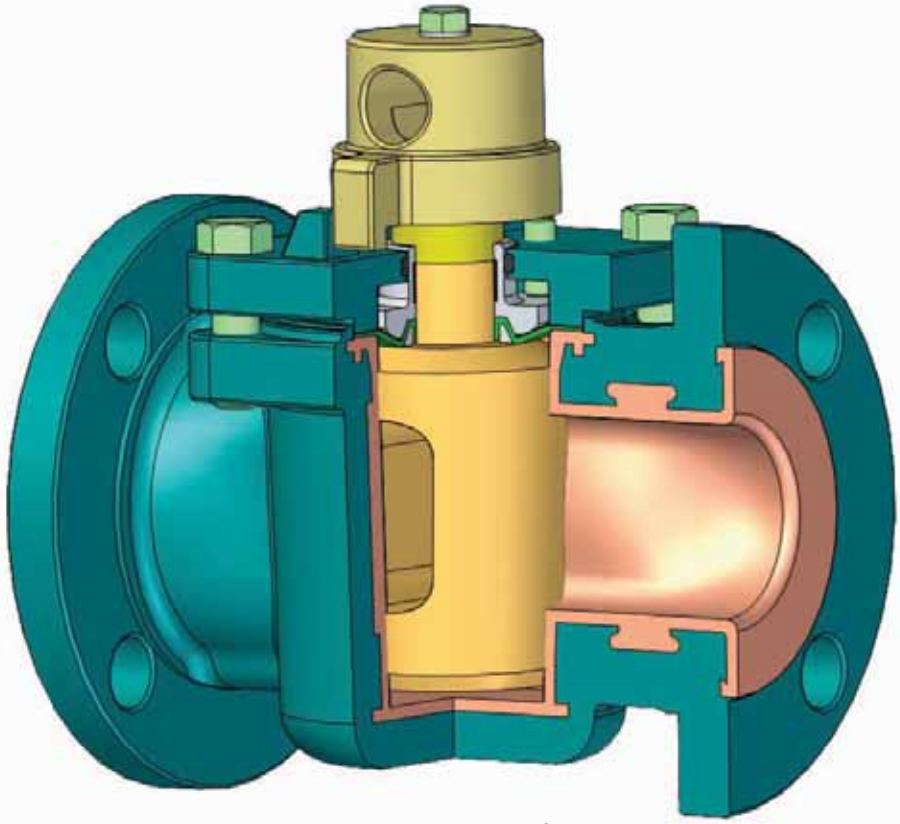

FIG. P25L WCB/PFA

TEFLON LINED PLUG VALVES

Non-Lubricated Type

Material

- Body, Plug : ASTM A216 WCB, ASTM A351 CF8M, CF3M, ETC

- LINING MATL: PFA

Size 1/2″~ 18″

Use Temperature -50℃~230℃

Main Fluid : Acidic or Alkatic fluid line specially required for No-Leakage.

TEFLON LINED PLUG VALVES

P25L Flanged ANSI class 150

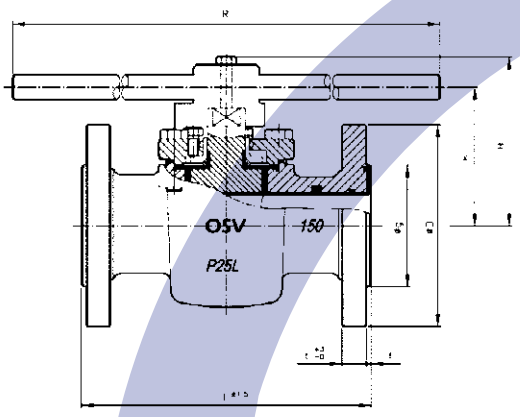

1/2″ THRU 4″

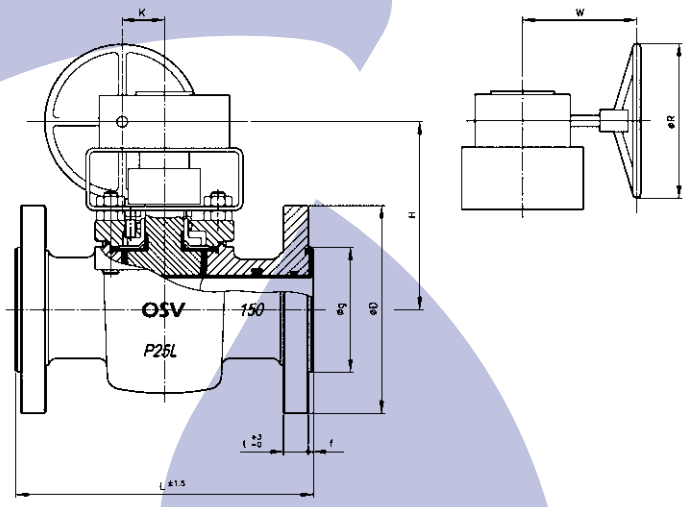

4″ & 6″ OVER

DIMENSIONS

UNIT : MM

			END FLANGES													
							BOLT HOLE									
IN	MM	L	D	g	t	f	PCD	N	d	h	H	R	K	W	OPERATOR	REMARK
1/2	15	108	89	35	11.7	2.0	60.5	4	16	80	-	180	-	-	WITH	
3/4	20	117	98	43	12.4	2.0	70.0	4	16	80	-	180	-	-	WRENCH	
1	25	127	108	51	14.2	3.0	79.5	4	16	75	96	222	-	-		
1.1/2	40	165	127	73	17.2	3.0	98.5	4	16	91	116	320	-	-		
2	50	178	152	92	18.8	3.0	120.5	4	19	106	130	460	-	-		
2.1/2	65	190	178	105	20.5	3.0	139.5	4	19	121	145	600	-	-		
3	80	203	190	127	22.1	3.0	152.5	4	19	121	145	600	-	-		
4	100	229	229	157	27.4	3.5	190.5	8	19	150	178	750	-	-		
4	100	229	229	157	27.4	3.5	190.5	8	19	-	233	250	53	177	WITH	
6	150	267	279	216	28.9	3.5	241.5	8	22	-	260	300	62.5	228	WORM	
8	200	292	343	270	32.1	3.5	298.5	8	22	-	343	300	62.5	228	GEAR	
10	250	330	406	324	34.2	4.0	362.0	12	25	-	374	500	91.5	297		
12	300	356	483	381	35.8	4.0	432.0	12	25	-	464	560	113	330		

TEFLON LINED PLUG VALVES

P23L Flanged ANSI class 300

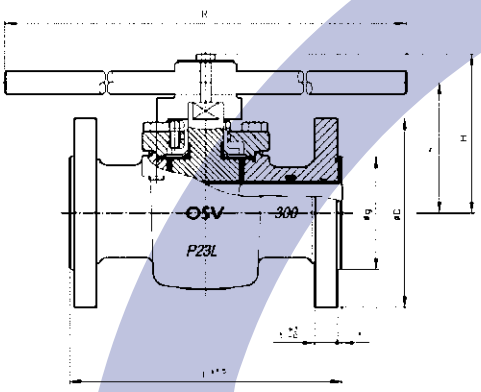

1/2″ THRU 4″

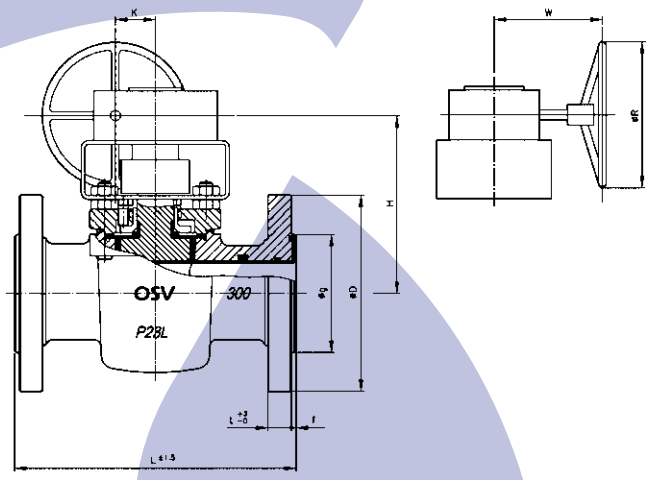

4″ & 6″ OVER

DIMENSIONS

UNIT : MM

			END FLANGES													
							BOLT HOLE									
IN	MM	L	D	g	t	f	PCD	N	d	h	H	R	K	W	OPERATOR	REMARK
1/2	15	140	95	35	16.3	2.0	66.5	4	16	80	-	180	-	-	WITH	
3/4	20	152	117	43	17.9	2.0	82.5	4	19	80	-	180	-	-	WRENCH	
1	25	165	124	51	20.5	3.0	89.0	4	19	75	96	222	-	-		
1.1/2	40	190	156	73	23.7	3.0	114.5	4	22	91	116	320	-	-		
2	50	216	165	92	25.3	3.0	127.0	8	19	106	130	460	-	-		
2.1/2	65	283	210	127	31.6	3.0	168.0	8	22	121	145	600	-	-		
3	80	305	254	157	35.3	3.5	200.0	8	22	121	145	600	-	-		
4	100	305	254	157	35.3	3.5	200.0	8	22	150	178	750	-	-		
4	100	403	318	216	39.1	3.5	270.0	12	22	-	233	250	53	177	WITH	
6	150	419	381	270	46.8	3.5	330.0	12	25	-	260	300	62.5	228	WORM	
8	200	457	444	324	52.2	4.0	387.0	16	29	-	343	300	62.5	228	GEAR	
10	250	502	521	381	54.8	4.0	451.0	16	32	-	374	500	91.5	297		
12	300	140	95	35	16.3	2.0	66.5	4	16	-	464	560	113	330		

OS VALVE

TEFLON LINED ACCESSORY VALVES

TEFLON LINED BALL CHECK VALVES

Non-Lubricated

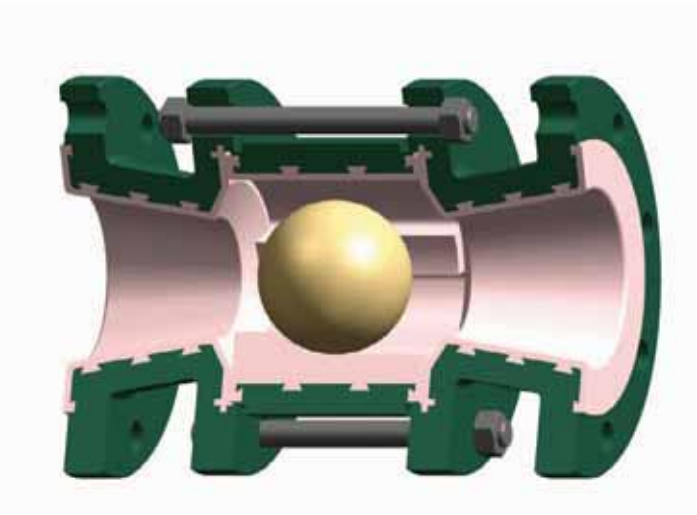

FIG. B25L WCB/PFA

TEFLON LINED BALL CHECK VALVES

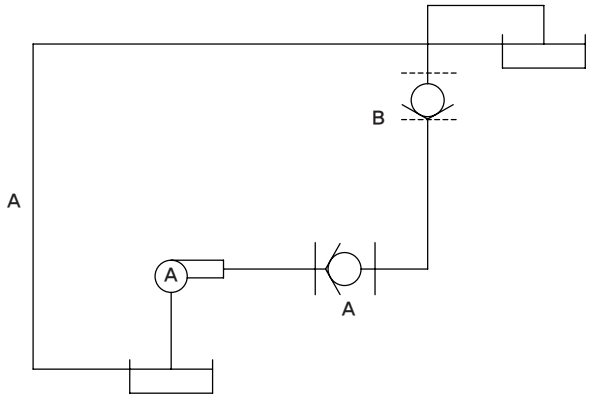

OPERATION DIAGRAM

Structure

The whole body of the valve has PFA & FEP Teflon linings. RTFE ball moves freely on the Spacer where lining has been done with Teflon materials and the ball stops in the double sided flange passage way. Pressure of the material of the counter flow moves the ball upstream stopping the flow. The spacer of the downstream is in development to ensure there is a free flow.

Places of use and function

1) Prevent harm done on the pump motor by counter flow
2) Prevent harm done on the pump impeller by the counter flow
3) Interception when the back-head is high

TEFLON LINED BALL CHECK VALVES

B25L Flanged ANSI class 150

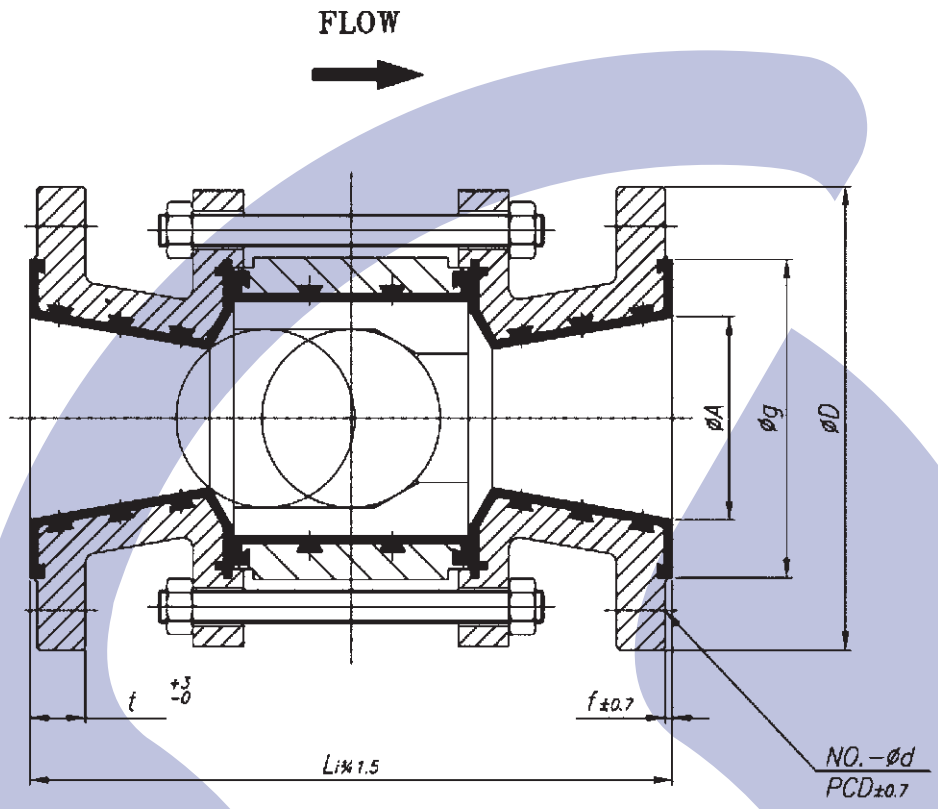

DIMENSIONS

UNIT : MM

NOMINAL SIZE			END FLANGES								WALL THICKNESS	WEIGHT (KG)	ACTUATOR	REMARK
								BOLT HOLE						
IN	MM	L	D	A	g	t	f	PCD	NO.	d				
1/2	15	152	89	15	35	10.1	2.0	60.5	4	16	6.4	3	BALL	
3/4	20	152	98	20	43	10.8	2.0	70.0	4	16	6.4	3.5	CHECK TYPE	
1	25	152	108	25	51	12.6	3.0	79.5	4	16	6.4	4		
1.1/2	40	165	127	38	73	15.6	3.0	98.5	4	16	6.4	10		
2	50	217	152	51	92	17.2	3.0	120.5	4	19	8.7	15		
3	80	254	190	76	127	20.5	3.0	152.2	4	19	10.3	22		
4	100	317	229	102	157	25.8	3.5	190.5	8	19	11.1	378		
6	150	381	279	152	216	27.3	3.5	241.5	8	22	11.9	50		
8	200	482	343	203	270	31.2	3.5	298.5	8	22	12.7	85		
10	250	635	406	250	324	34.2	4.0	362.0	12	25	14.3	127		

TEFLON LINED SWING CHECK VALVES

Non-Lubricated

FIG. S25L WCB/PFA

TEFLON LINED SWING CHECK VALVES

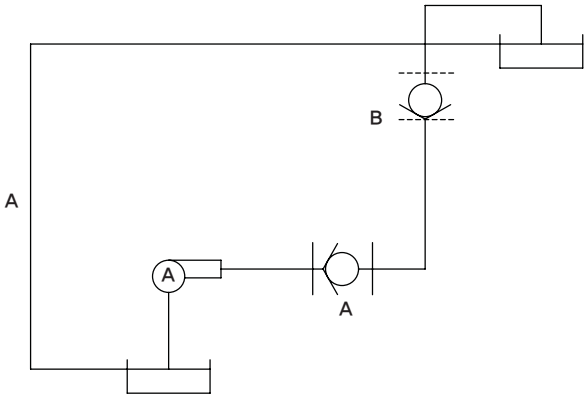

OPERATION DIAGRAM

Structure

Teflon Lined Swing Check Valve is composed of the Body and 2 Discs all of which come in contact with the flowing bodies. The areas of contact have Teflon lining making the product applicable to places where an anti-corrosive characteristic is needed instead of high steel alloy valves. The disc with an attached hinge between the valve's body and the flange moves to stop or allow the flow.

Use

1) Prevention of the counter rotation of the Pump Motor
2) Shock prevention of the Pump
3) Shut-off function when the back head is high

TEFLON LINED SWING CHECK VALVES

Non-Lubricated

Use

- Vertical and horizontal piping can be available.
- It can be with strong and corrosive liquid instead of an expensive high-alloy valve.
- It has only its own two components since a spring or pin can't be used because of corrosion and oxidation.

Material

Body	WCB(316) / PFA(FEP)
DISC	FEP(PFA) : 4″ and Under
	WCB/PFA(FEP) : 6″ and Under
	LINING THICK 2.4mm Over

TEFLON LINED WATER TYPE CHECK VALVES

S25L Flanged ANSI class 150

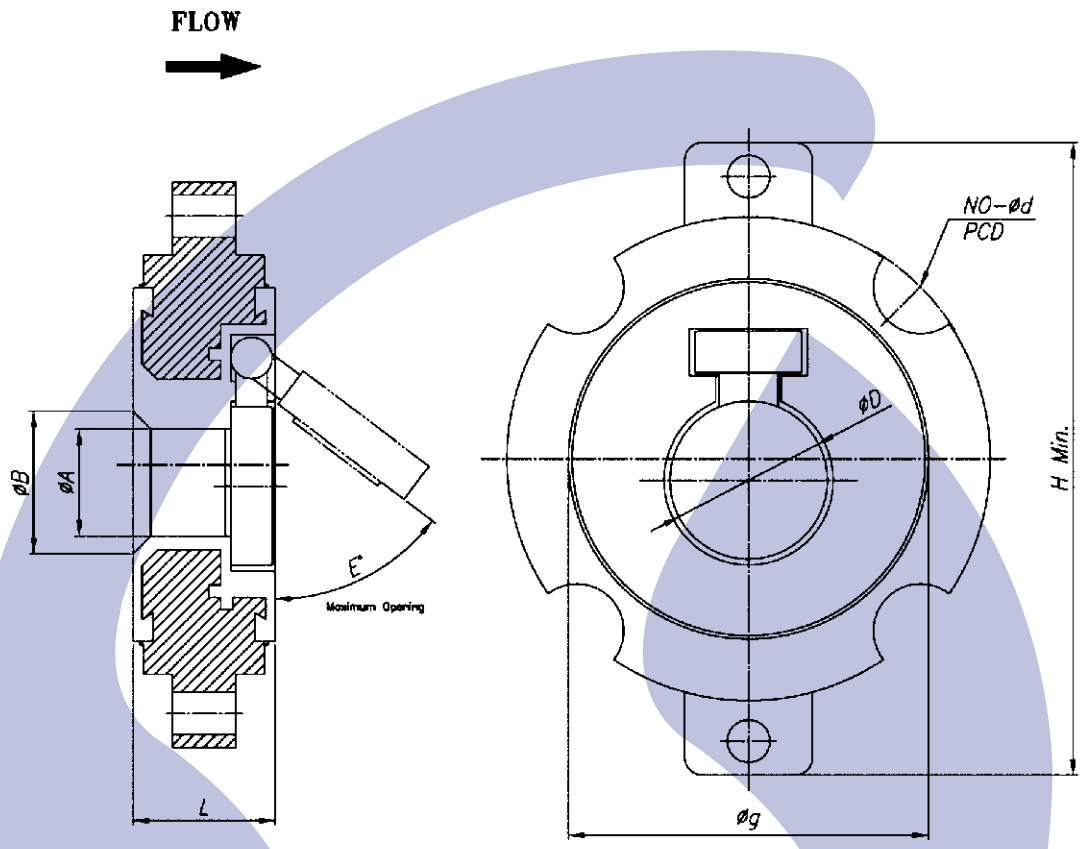

DIMENSIONS

UNIT : MM

NOMINAL SIZE			END FLANGES								
				BOLT HOLE							
IN	MM	L	g	PCD	NO.	d	A	B	E	H	REMARK
1.1/2	40	40	73	98.5	4	16	25	36	51	105	
2	50	40	92	12.5	4	19	30	40	53	175	
3	80	46	127	152.5	4	19	45	55	55	190	
4	100	46	157	190.5	8	19	70	80	64	266	
6	150	57	216	241.5	8	22	110	125	65	319	
8	200	67	270	298.5	8	22	158	172	61	373	
10	250	76	324	362.0	12	25	184	222	53	394	
12	300	86	381	432.0	12	25	232	256	53	510	

OS VALVE

METAL TYPE LUBRICATED PLUG VALVES

METAL TYPE PRESSURE BALANCED PLUG VALVES

Lubricated

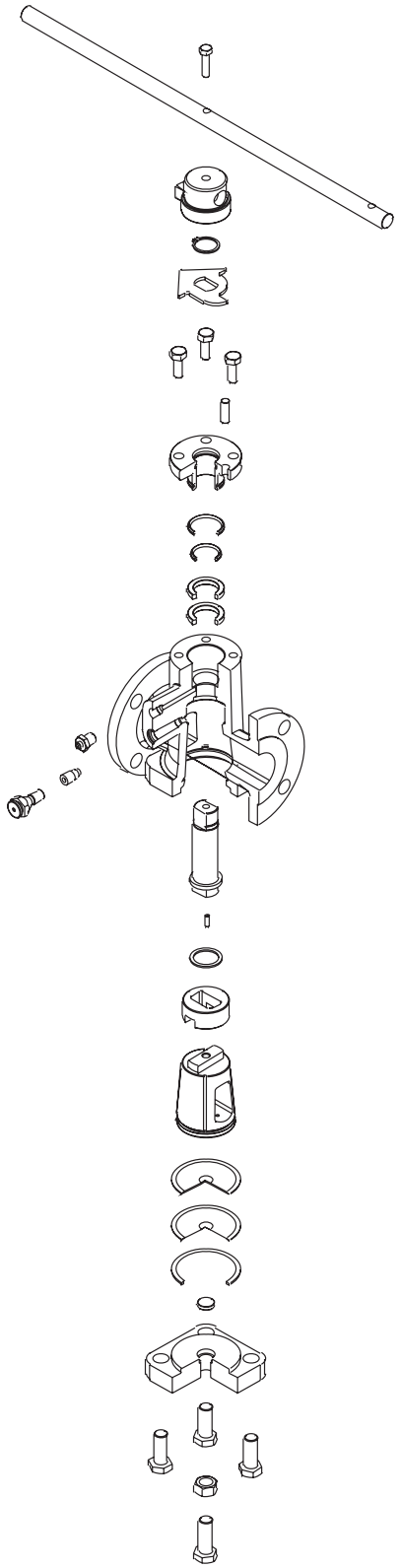

■ PART OF STANDARD MATERIAL

NO	DESCRIPTION	MATERIAL	SPECIFICATION
1	WRENCH	CARBON STEEL	1045. PAINTED
2	HUB BOLT	CARBON STEEL	SUS304
3	HUB	CARBON STEEL	ASTM A216 WCB
4	SNAP RING	CARBON STEEL	1020, PAINTED
5	INDICATOR	STAINLESS STEEL	SUS304
6	STEM	STAINLESS STEEL	SUS316
7	THRUST BEARING	STAINLESS STEEL	SUS316
8	GRAND BOLT	STAINLESS STEEL	SUS304
9	STOPPER	STAINLESS STEEL	SUS304
10	GRAND	STAINLESS STEEL	SUS316
11	GRAND PACKING	GRAPHITE	
12	O-RING(Ⅰ)	VITON	
13	O-RING(Ⅱ)	VITON	
14	BODY	CARBON STEEL	ASTM A216 WCB
15	NEEDLE VALVE	STAINLESS STEEL	SUS304
16	CHECK VALVE	STAINLESS STEEL	SUS304
17	GREASE NIPPLE	STAINLESS STEEL	SUS304
18	COMPENSATOR	CARBON STEEL	1045 PAINTED
20	METAL DIAPHRAGM(Ⅰ)	STAINLESS STEEL	SUS304
21	METAL DIAPHRAGM(Ⅱ)	CARBON STEEL	1045
22	GASKET	SOFT STEEL	1020
23	PRESSURE BUTTON	CARBON STEEL	ASTM A216 WCB
24	COVER	CARBON STEEL	ASTM A216 WCB
25	COVER BOLT	CARBON STEEL	ASTM A193 B7
26	LOCK NUT	CARBON STEEL	ASTM A194 2H
27	ADJUSTING BOLT	CARBON STEEL	ASTM A193 B7

METAL TYPE PRESSURE BALANCE PLUG VALVES

Lubricated

DESIGN FEATURES

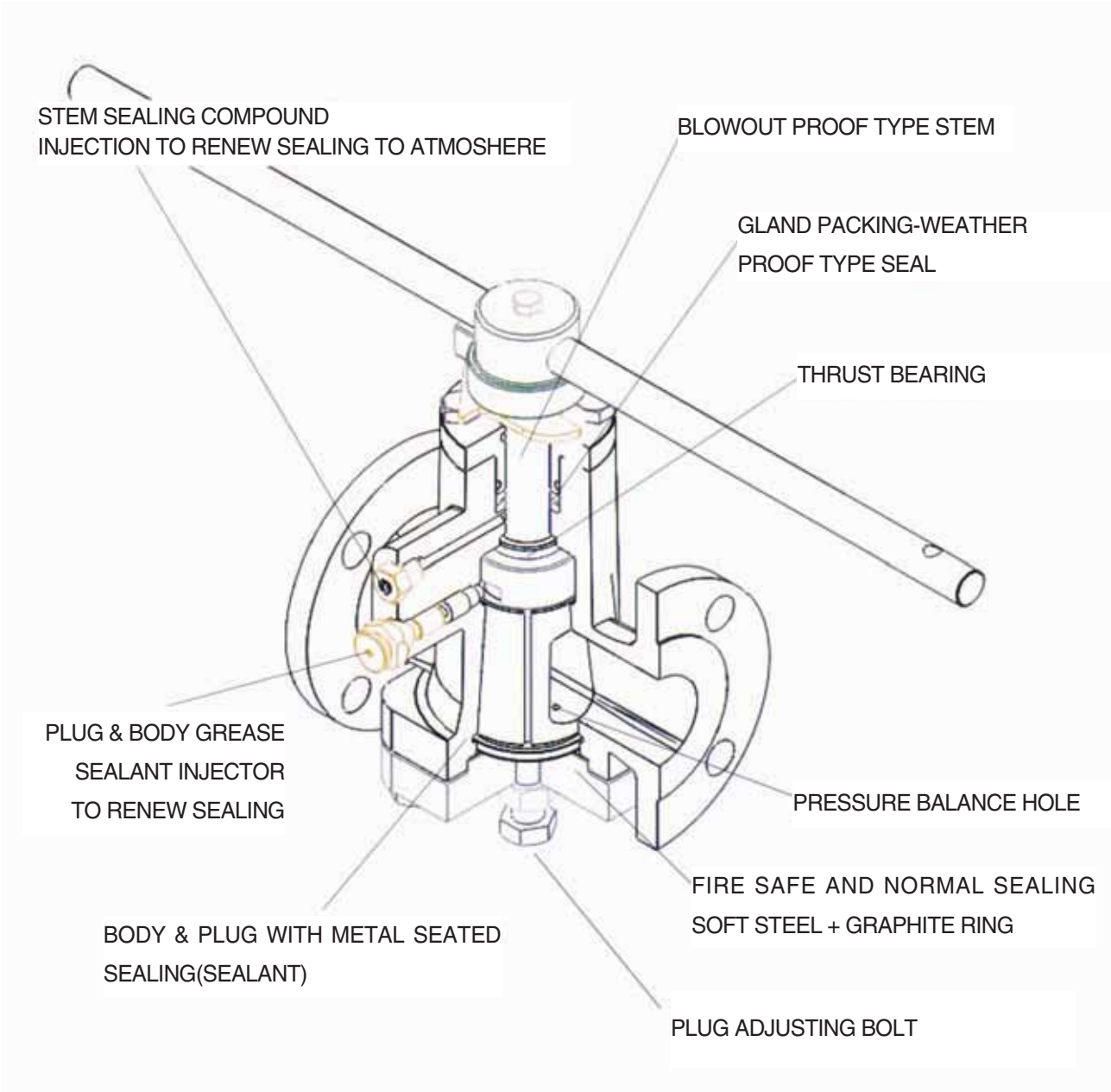

METAL TYPE PRESSURE BALANCE PLUG VALVES

Lubricated

■ FEATURES

1. OSV FEATURES

1) No Leakage (Bubble Tight Shut Off)

OSV tapered plug valve assures positive bubble tight shut off with unique sealant system.

2) No Maintenance (In-Line Adjustment)

OSV tapered plug valve can be adjusted with the valve in line, extending the service life of the valve.

3) No Dead Space

Slurry or sludge don t accumulate anywhere in a OSV valve, because OSV valve have no dead cavity in the flow path.

2. EASE OF OPERATION

Positive quarter turn operation is quick and sure.

3. PRESSURE BALANCE SYSTEM

For maintaining pressure equalization between plug port and bottom of the plug, and for ensuring the pressure above the plug being the same as or greater than in the plug port, OSV pressure balance system design is available.

4. SAFETY

Fire tested according to API 607.

■ BENEFIT

1. PRESSURE BALANCED TYPE AS STANDARD

2. BLOWOUT- PROOF STEM STRUCTURE

3. OPERATION

1) Freedom from seizure by long service operation

2) Consistent Torque

4. SELF CLEANING SEATING SURFACE

The turning action of plug valves scrape off any ingredient which may accumulate the plug surface in a closed position.

METAL TYPE PRESSURE BALANCED PLUG VALVES

Lubricated

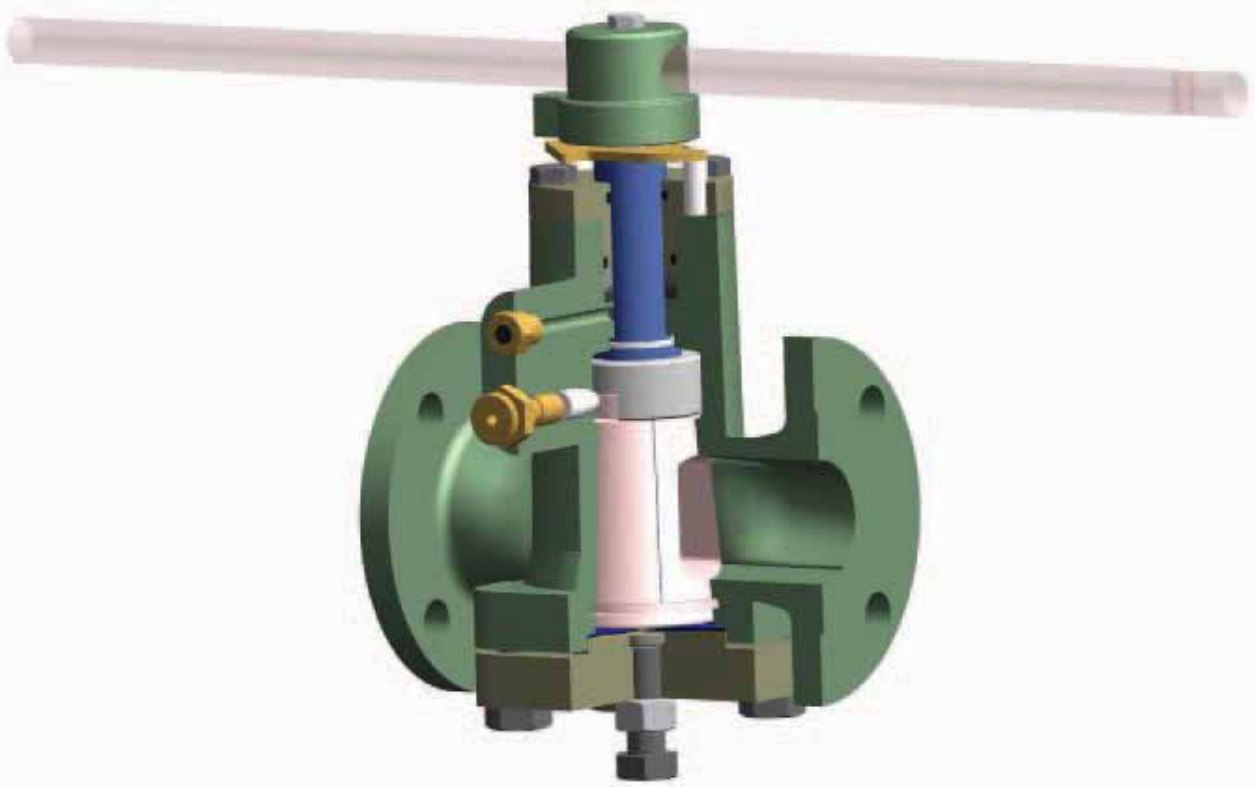

FIG. P260L WCB/WCB
PRESSURE BALANCED PLUG VALVES

Lubricated Type

- **CLASS** ANSI 150#, 300#, 600#, 900#, 1500#
- **Size** 1/2″ ~ 24″

METAL TYPE PRESSURE BALANCE PLUG VALVES

Lubricated Type

SEALANTS

OSV	ROCKWELL	WALWORTH	CLIMAX	AVAILABLE FLUID
OS-400/400A	147-421		400/400A	Acids, Alcohols, Glycerine
OS-204	234		204	Silicone sealant
OS-711	357		711	Gasoline, Mineral Oils, Kerosene
OS-600	386		600	General gas and Wate sealant
OS-650/800/900	555	No.1	650/800/900	Aliphatic hydrocarbon liquids and gases
OS-650/800/900	654		650/800/900	Hot hydrocarbon vapors and gases
OS-711	755	No.7	711	Benzene, butane, solvent naphthas
OS-711	833		711	Aviation gasoline, Jet fuel
OS-GP	862		220	Air and inert gases at sub-zero temp
OS-950	950	No.5, No6	950	Benzene, propylene, styrene, LPGS
OS-400A		No.4	400A	Strong acids, alkalies
OS-340			340	Sour gas, H_2S, CO_2
OS-FL5	660		FL-5	Fluorocarbon, lubricant oxygen chlorine
OS-PS3	921		Polyseal No.3	Hot hydrocarbon gases and vapors
OS-PS6		No.2	Polyseal No.6	Steam, high temperature water

The availble fluid is recommened by OSV. As the conditions of the used fluid differ, it is possible to change the appropriate sealant.

METAL TYPE PRESSURE BALANCE PLUG VALVES

Lubricated Type

APPLICATION : CHEMICAL, OIL, GAS AND HYDROCARBON PROCESS IN INDUSTRIES

OSV PATTERN FOR PRESSURE BALANCED PLUG VALVES.

1. OSV HAVE CAST PATTERNS FOR SHORT, REGULAR AND VENTURI ACCORDING TO API 6D & API599.
2. FACE TO FACE AND END TO END DIMENSIONS CONFORM TO API599 (ANSI B 16.34).
3. AVAILABLE PATTERN GOING WITH SIZE & CLASS.

NORMAL SIZE		CLASS					
IN	MM	ANSI 150#	ANSI 300#	ANSI 600#		ANSI 1500#	
1/2	15			R	R		
3/4	20			R	R		
1	25			R	R		
1-1/2	40		S	R	R		
2	50	S	S	R	R		
3	80	S	S	R	R		
4	100	S	S	R	R		
6	150	S	V	R	V	R	V
8	200	S	V	R	V	R	V
10	250	S	V	R	V	R	V
12	300	S	V	R	V	R	V
14	350	V	V	R	V		
16	400	V	V		V		V
18	450	V	V		V		
20	500	V	V		V		
24	600	V	V		V		

NOTES

1. Above pattern is available for flanged end type.
2. If a Specific requirement for pattern is available, please contact to OSV
3. Above chart symbols means as follows :

   S : SHORT PATTERN, R : REGULAR PATTERN, V : VENTURI PATTERN

METAL TYPE PRESSURE BALANCE PLUG VALVES

Lubricated Type

LUBRICANTS

The role of lubricants

It minimizes the resistance during working and prevents corrosion inside the plug. The port part of the valve is covered with lubricant groove and prevents any leakage.

The characteristic of lubricants

OSV-Lubricants have necessary characteristics for several purposes.

1. The lubricated valve is suitable for working the valve easily.
2. It is strong enough to resist dilution by fluids.
3. It is chemically inactive and firmly adherent for anti-corrosiveness .
4. It maintains a fluid state against a wide range of temperatures.
5. It minimizes the solidification caused by temperature or chemical reactions.

The selection of lubricants

It is selected in accordance with temperature, conformable and non-conformable fluids as below.

■ TABLE-1 OSV LUBRICANTS

LUBRICANT NO.	COLOR	TEMPERATURE	CONFORMITY	NON-CONFORMITY
OS-104	Peanut Butter	18~260℃	Scrayched ball & plug valve	Alkali
OS-204	White	46~204℃	Molten Sulfur, Acetic Anhydride, Acetic Acid	LPG or solvent of hydrocarbon
OS-220	Transparent	59~121℃	Pipe line, compressor, Gasoline & oil factory for Low temperature	Aromatic & sorbent
OS-340	Yellow	28~204℃	Where H_2 and CO_2 meet	Solvent & ammine
OS-350A	Yellow	29~204℃	Mixture of HF & LPG	High temperature air
OS-400A	Yellowish brown	29~204℃	Aqueous solution of acid & base	Fluid hydrocarbon
OS-400	Red	20~232℃	Acid & base	Fluid hydrocarbon
OS-525	Transparent	18~204℃	Air starting valve	Fluid hydrocarbon
OS-600	Brown	29~260℃	Gas & water Sealant & hydrocarbon line	LPG
OS-650	Green	40~260℃	Hydrocarbon & LPG line	Aromatic, alkali & sorbent
OS-711	White	0~204℃	Aerial Gasoline & oil, Alkylate compound	100% Benzine

METAL TYPE PRESSURE BALANCE PLUG VALVES

Lubricated Type

LUBRICANTS

LUBRICANT NO.	COLOR	TEMPERATURE	CONFORMITY	NON-CONFORMITY
OS-750	Black	18~316℃	High temperature asphalt line & steam line	Aromatic, alkali, sorbent
OS-800	White	29~232℃	Butane, Butadiene, CCL4, Ethane, Propane	Alkali
OS-900	Black	29~343℃	Nutural gas, Oil-Chemical factory, Bubber Factory	Alkali
OS-901	Black	34~149℃	Low temperature air, Hydrocarbon lubricant	Alkali
OS-950	Black	40~149℃	Propylene, Butadiene Xylene, Benzene, Styrene	Alkali

LUBRICANT NO.	TEMPERATURE	CONFORMITY	NON-CONFORMITY
OS-Turn #1	29~260℃	Removal of residue in Hydrocarbon line valve	Sealant
OS-Turn #2	29~260℃	Ditto, except acid & base	Sealant
OS-FL5	18~204℃	Corrosive fluid & oxide	Aluminium & Magnesium
OS-PS6	0~232℃	Steam & high temperature water	Fluid hydrocarbon
OS-PS3	0~343℃	Over-heated steam	Fluid hydrocarbon
OS-1500	~815℃	Anti-Ceez Lubricant	Fluid hydrocarbon
OS-S3	29~177℃	EP bearing lubricant	Fluid hydrocarbon

The maintenance of lubricant

The needed quantity of maintenance shall be in accordance with the working cycle of the valve.

Periodical improvement

Leakage should be prevented. All valves that are not used periodically should be improved every six months.

LUBRICATED TYPE PLUG VALVES

P250L Flanged ANSI class 150

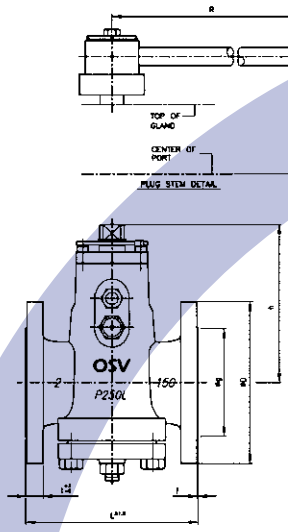

1/2″ THRU 4″

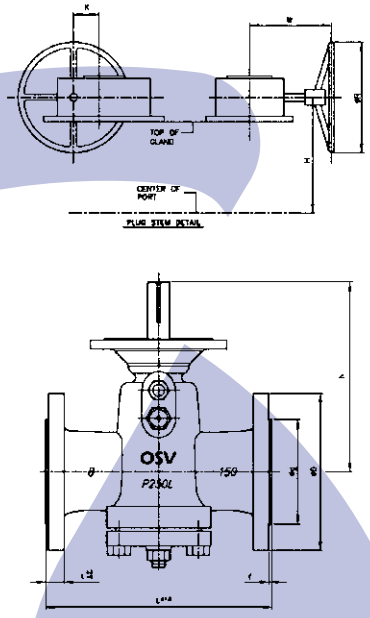

4″ & 6″ OVER

DIMENSIONS

UNIT : MM

			END FLANGES													
							BOLT HOLE									
IN	MM	L	D	g	t	f	PCD	N	d	h	H	R	K	W	OPERATOR	REMARK
1/2	15	108	89	35	9.7	1.6	60.	5 4	16	68	87	180	-	-	WITH	
3/4	20	117	98	43	10.4	1.6	70.0	4	16	68	87	180	-	-	WRENCH	
1	25	127	108	51	11.2	1.6	79.5	4	16	98	125	222	-	-		
1.1/2	40	165	127	73	14.2	1.6	98.5	4	16	148	168	320	-	-		
2	50	178	152	92	15.8	1.6	120.5	4	19	170	182	460	-	-		
2.1/2	65	190	178	105	17.5	1.6	139.5	4	19	205	225	600	-	-		
3	80	203	190	127	19.1	1.6	152.5	4	19	205	225	600	-	-		
4	100	229	229	157	23.9	1.6	190.5	8	19	232	248	750	-	-		
4	100	229	229	157	23.9	1.6	190.5	8	19	232	248	250	53	177	WITH	
6	150	267	279	216	25.4	1.6	241.5	8	22	325	381	300	62.5	228	WORM	
8	200	292	343	270	28.6	1.6	298.5	8	22	382	465	300	62.5	228	GEAR	
10	250	330	406	324	30.2	1.6	362.0	12	25	423	580	500	91.5	297		
12	300	356	483	381	31.8	1.6	432.0	12	25	483	645	560	113	330		
14	350	381	533	413	35.1	1.6	476.0	12	29	525	762	630	153	370		
16	400	762	597	470	36.6	1.6	539.5	16	29	735	814	560	113	360		
18	450	864	635	533	39.7	1.6	578.0	16	32	895	925	630	153	420		
20	500	914	698	584	42.9	1.6	635.0	20	32	945	1025	800	235	552		
24	600	1067	813	692	52.4	1.6	749.5	20	35	1020	1254	900	281	602		

LUBRICATED TYPE PLUG VALVES

P230L Flanged ANSI class 300

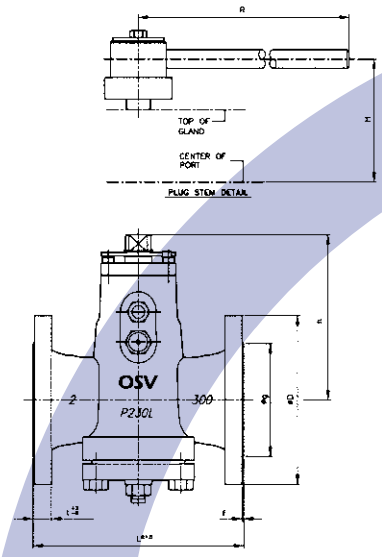

1/2″ THRU 4″

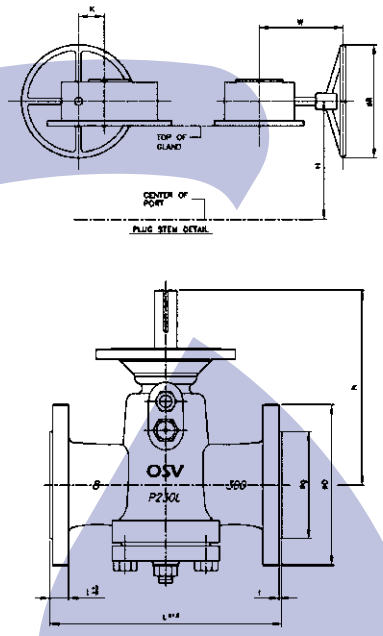

4″ & 6″ OVER

DIMENSIONS

UNIT : MM

			END FLANGES													
							BOLT HOLE									
IN	MM	L	D	g	t	f	PCD	N	d	h	H	R	K	W	OPERATOR	REMARK
1/2	15	140	95	35	14.3	1.6	66.5	4	16	68	87	180	-	-	WITH	
3/4	20	152	117	43	15.9	1.6	82.5	4	19	68	87	180	-	-	WRENCH	
1	25	165	124	51	17.5	1.6	89.0	4	19	98	125	222	-	-		
1.1/2	40	190	156	73	20.7	1.6	114.5	4	22	148	168	320	-	-		
2	50	216	165	92	22.3	1.6	127.0	8	19	170	182	460	-	-		
2.1/2	65	241	190	105	25.4	1.6	149.0	8	22	205	225	600	-	-		
3	80	283	210	127	28.6	1.6	168.0	8	22	205	225	600	-	-		
4	100	305	254	157	31.8	1.6	200.0	8	22	232	248	750	-	-		
4	100	305	254	157	31.8	1.6	200.0	8	22	232	248	250	53	177	WITH	
6	150	403	318	216	36.6	1.6	270.0	12	22	325	381	300	62.5	228	WORM	
8	200	419	381	270	41.3	1.6	330.0	12	22	382	465	300	62.5	228	GEAR	
10	250	457	444	324	47.7	1.6	387.5	16	29	423	580	500	91.5	297		
12	300	502	521	381	50.8	1.6	451.0	16	32	483	645	560	113	330		
14	350	762	584	413	54.0	1.6	514.5	20	32	525	762	630	153	370		
16	400	838	648	470	57.2	1.6	571.5	20	35	735	814	560	113	360		
18	450	914	711	533	60.4	1.6	628.5	24	35	895	925	630	153	420		
20	500	991	775	584	63.5	1.6	686.0	24	35	945	1025	800	235	552		
24	600	1143	914	692	69.9	1.6	812.8	24	41	1020	1254	900	281	602		

LUBRICATED TYPE PLUG VALVES

P260L Flanged ANSI class 600

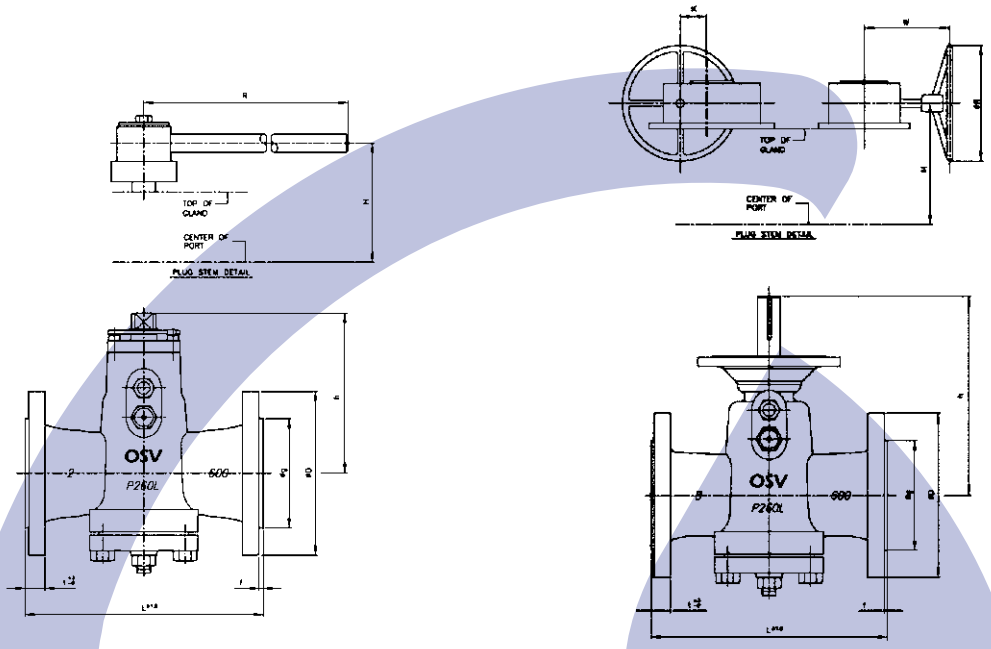

1/2″ THRU 4″

4″ & 6″ OVER

DIMENSIONS

UNIT : MM

			END FLANGES													
							BOLT HOLE									
IN	MM	L	D	g	t	f	PCD	N	d	h	H	R	K	W	OPERATOR	REMARK
1/2	15	165	95	35	20.7	6.4	66.5	4	16	68	87	180	-	-	WITH	
3/4	20	190	117	43	22.3	6.4	82.5	4	19	68	87	180	-	-	WRENCH	
1	25	216	124	51	23.9	6.4	89.0	4	19	98	125	222	-	-		
1.1/2	40	241	156	73	28.7	6.4	114.5	4	22	148	168	320	-	-		
2	50	292	165	92	31.8	6.4	127.0	8	19	170	182	460	-	-		
2.1/2	65	330	190	105	35.0	6.4	149.0	8	22	205	225	600	-	-		
3	80	356	210	127	38.1	6.4	168.0	8	22	205	225	600	-	-		
4	100	432	273	157	44.5	6.4	216.0	8	25	232	248	750	-	-		
4	100	432	273	157	44.5	6.4	216.0	8	25	232	248	250	53	177	WITH	
6	150	559	356	216	54.1	6.4	292.0	12	29	325	381	300	62.5	228	WORM	
8	200	660	419	270	62.0	6.4	349.0	12	32	382	465	300	62.5	228	GEAR	
10	250	787	508	324	69.9	6.4	432.0	16	35	423	580	500	91.5	297		
12	300	838	559	381	73.1	6.4	489.0	20	35	483	645	560	113	330		

NOTES

1. Pressure 900# and above size 12 inch of 600# and above 900#, 1500#,2500# should be made case by case.
2. JIS standard table drawing will be released by OSV separately, when client required.

METAL TYPE PRESSURE BALANCE PLUG VALVES

Lubricated Type

APPLICATION : CHEMICAL, OIL, GAS AND HYDROCARBON PROCESS IN INDUSTRIES

MAXIMUM BREAK TORQUE

- OSV LUBRICATED PLUG VALVES HAVE THE LOWEST POSSIBILITY OF TURNING TORQUE COMPARED WITH TIGHT SHUT-OFF CONDITIONS.
- THE TABLE GIVEN BELOW IS ACTUAL TEST DATA FOR EXPECTED MAXIMUM WORKING CONDITIONS.

UNIT : N.m

	NOMINAL SIZE		CLASS		
	IN	MM	ANSI CLASS150	ANSI CLASS300	ANSI CLASS600
VALVE TORQUE	1	25	33		
	2	60	162	173	210
	3	80	173	249	400
	4	100	303	378	735
	5	150	197	649	1,167
	6	200	1,027	984	2,269
	10	250	1,470	2,475	3,620
	12	300	2,053	2,637	5,823
	14	350	2,053	3,729	5,620
	16	400	2,702	4,648	7,350
	18	460	3,469	6,784	10,593
	20	500	4,626	5,859	17,294
	24	600	5,836	13,295	31,344

NOTES

1. Above table data add 30% safety factor to actual torque data.
2. When sizing an actuator, consult with OSV.

OS VALVE

DOUBLE BLOCK & BLEED PLUG VALVES

STRUCTURE OF DOUBLE BLOCK & BLEED PLUG VALVE Non-Lubricated

This system is designed to relieve excess pressure rise in the body cavity of a closed valve due to ambient temperature causing expansion of the liquid in the valve. The relief valve is set to openat 25 PSI on all valves, regardless of their working pressure. With the Double Seal valve closed, the relief valve will open at 25 PSI above upstream pressure. This system functions only when the Double Seal valve is closed and the isolation valve is open.

◆ PLUG VALVE' s characteristic and merits

1. Completely no leakage.
   ①PLUG & Tapered pipe of the Teflon Sleeve uses the contact method giving absolutely no leakage problems compared to other Process Valves.
   ②Stem Seal structure has secured the security design and gives absolutely no leakage characteristic of magnet powered type.
   ③Weather Proof Type characteristic has been added. The steam seal parts of products of other enterprises leaks and after long usage corrosion takes place in the sealing but our product has used the sealing structure in the stem part and the covering part which gives absolutely no leakage for longtime use eventually increasing the life span of the product. (Top Seal structure)
2. No dead space in the valve.
   The passage ways of the valve have no extra space like other Process valve allowing full control and open/close function, semi - permanent life span.
3. No need of maintenance and repair
   Having no extra space there is no worry that the moving materials are clogged up inside the pipe.
   ①The Seal pressure made by the abrasion of the Teflon sleeve is re - controlled by the Cover of ADJ. Bolt for semi - permanent sealing.
   ②Inside the Body of the port is a Metal lip with Self-cleaning function which can control all sticky and solid materials.
   ③Top entry type allowing maintenance in on-line status possible. Valve which doesn't need much maintenance.

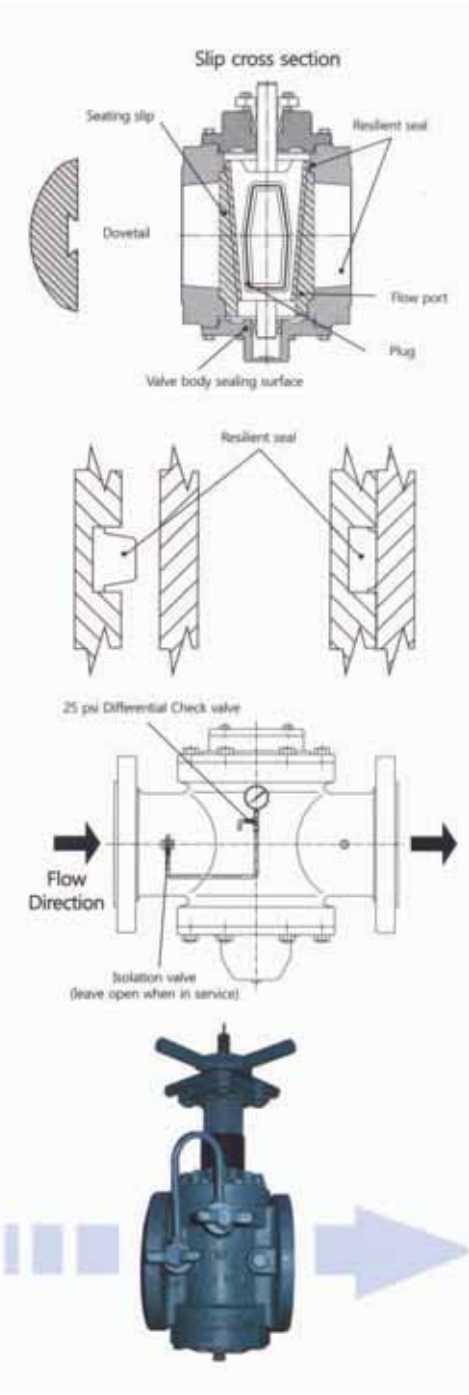

OSV DOUBLE BLOCK & BLEED PLUG VALVE

DOUBLE BLOCK & BLEED PLUG VALVE HOW THIS VALVE WORKS

Non-Lubricated

1) CLOSING

The smaller sizes of Double Seal Valves are handwheel operated and large valves have enclosed weatherproof gearing, but operate in the same manner, requiring proportionately more turns. Turning the operator rotates the plug 90 degrees, aligning the seating slips.

2) COMPRESSING

Turned further, the plug lowers, forcing the seals against the body and compressing them to fit into grooves. With the slip solidly against the body, a secondary metal-to-metal seat forms on both sides of each seal providing double protection. During compressing, the wedging action of the plug forces the seating slips against the valve body.

3) OPENING

During opening,the dovetails pull the slips away from the body. The plug is guided by upper trunnion and then the plug is rotated 90 degrees, aligning the seating slips. In the open position, the seals are completely out of the low.

CHARACTERISTIC OF DOUBLE BLOCK & BLEED PLUG VALVE Non-Lubricated

◆ Completely no leakage.

A valve selection is very important in petroleum industry. A wrong valve selection causes the decrease of income, the pollution of product and the increase of product line maintenance cost. In multi-product systems, the valves should stand cycle variation of frequent and cut off completely in up-stream sealing and down sealing. The double block and bleeding valve is developed for satisfying a demand fact of metering station, tank farm marine loading docks, blending plant.

◆ Completely no abrasion.

DBB valves can do complete isolation without leakage in a design pressure, and the valve is designed so that a seal doesn't make contact with body of the valve the body during valve opening or closing of the valve. At the last moment of the closing operation, when the seal makes contact with the body, the existing force only consists of a pressure force. A shearing force doesn't be suspended. In all opening, handle operations, the seal is in separated form body, and maintain this state during plug rotation. This takes the abrasion of the seal away and extends the life span.

◆ Double block & bleed

In DBB there are up-stream seals, down-stream seals, and bleed points for each other. So one valve can substitute for two valves and one spool piece, drain. The spool drain sends leakage fluid of valve to tank.The bleed system in this valve is installed to ensure zero leakage.

◆ Complete interception

When the valve is closed, a seat place is in serfed in around plug and body port. An elastic quality of seal is compressed inside groove completely. It is a simple design without using a spring, line pressure, seal differential or brute force for fixing a seal. A sealing of DBB is perfect and can substitute for line blind.

◆ Quick and easy operation

DBB looks like a gate valve, and the operation of DBB is like a ball valve, but it is called a plug valve. Like this, DBB uses only the merit of each valve for complete sealing. The operation mechanism of DBB is an easy operation by minimum rotation.

◆ It is possible to repair on-line?

It is possible to inspect and substitute a seal in on-line DBB
This valve is designed for an easy use substitution and decrease at minimum repair cost.

◆ Operation without a shock

The operation mechanism of DBB is a self locking method, so the force of the fluid from the line doesn't rotate a plug. There aren't plug slaw, line shock and the risk of worker injury. In large size valves it isn't no necessity for attaching gear for catching the shock of line force.Because of this properties, it is changed that petroleum industry business of whole the world like DBB for good efficiency, long life, easy maintenance and low maintenance cost during usage.

DBB valve for complete sealing and the axis makes metal rotation pushing up the valve plug opening the entrance to 90 degrees. The process works in a counter process especially designed for the operation.

PLUG
SLIP BACK FACE
SLIP FRONT FACE
VITON O-RING

BODY

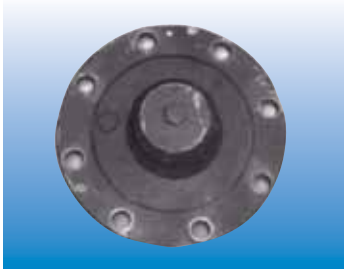

BOTTOM COVER

DBB PLUG VALVE FOR BLEED SYSTEM

Non-Lubricated

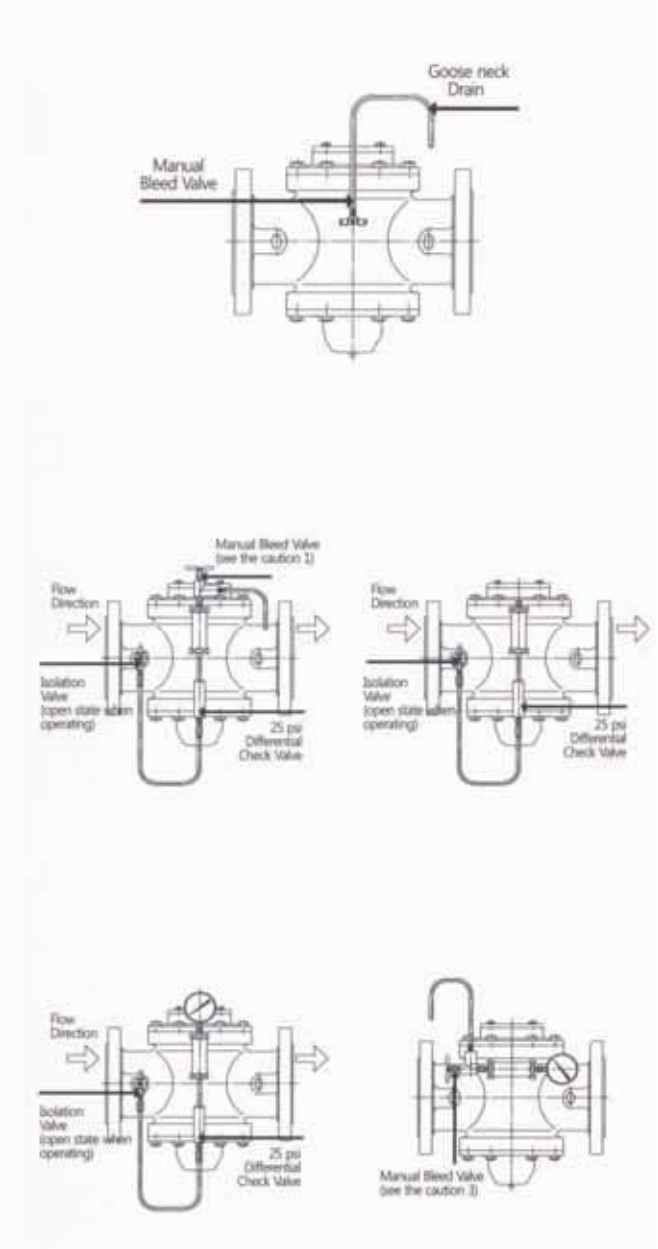

Hand bleed valve

It is the most simple method among bleed systems that is worked by hand. When the plug is closed, we open the bleed valve for seeing that sealing is maintained tightly. Before opening the plug, we close bleed valve.<caution 1> A bleed exit faces down vertically and a fluid falls on a fixed hollow and storage, so you prevent privately if the fluid is dangerous or scatters out of sight. Yon must pay attention to goose neck type the prevents the leakage of body fluid.

Thermal relief to upstream **

When the plug is closed, a thermal relief valve releases the fluid to upstream automatically, if the fluid in closing state does a thermal expansion. A relief valve is adapted for operating at 25psi pressure.

Thermal relief to atmosphere **

It is like a thermal relief to upstream, but it is mediated a fluid emits when the pressure is over 50 psi and the place of emission is waiting not upstream.

Hand bleed valve that has thermal relief **

A hand bleed valve shows a complete sealing and a thermal relief valve makes it possible that any thermal expansion is emitted to upstream safely and automatically. The relief valve is adapted for operating at 25 psi pressure. A relief valve is adapted for opening at 25 psi pressure in all valve. A relief valve in plug-closed is opened when the pressure of upstream is over 25 psi. This system operates only when the plug is closed and the isolation valve is opened. The thermal relief system is designed for decreasing the excess pressure of the body hole in the closed valve. This excess pressure is made when the fluid in the valve expands by high surround temperature.<caution 2> All automatic DBB need a pressure decrease system in the body. If not, the opening is difficult or a fluid sticks in the closed state.

Automatic body bleed valve The cheek valve that is operated by a plunger opens a bleed valve by a coupling cam during the plug valve closing. At this moment the plug of valve can be operated by hand or electric actuator. This system provides a complete automatic system by removing the factor that a human needs to intervene in checking the seal. An isolation valve that is a selection can be fixed in open state to prevent the mistake of checking sealing by human and prove the perfections of DBB valve.

Hand bleed valve that has a gauge-only if the fluid is liquid.

A hand bleed valve connected to a gage is used if you don t want an emission to atmosphere. A gauge always indicates the pressure of body hole and is used for measuring the tightness of sealing in many valve size. You may consult OSV about the pressure change that can occur in the closed state of DBB valve. specific size valve. After time passed, the pressure of body may be changed by heat, so a leakage indication can be wrong by this.

Thermal relief valve that has a gauge-only if the fluid is liquid.

The thermal relief valve for decreasing the pressure of the body that can occur by heat change is used by connecting a gauge for indicating the tightness of the seal. There isn`t an emission to the atmosphere. So it is no necessity water receiver system the emission pressure is adapted to 25 psi.<caution 3> When the plug is closed, the cam opens the automatic bleed and the fluid can exit. When the valve is closed completely, the ejecting fluid must stop if the out fluid is dangerous, it is necessary a proper water receiver system.

THE DEFINITE CHOICE OF THE OPERATION TOOL. OPERATOR OF DOUBLE BLOCK & BLEED PLUG VALVE Non-Lubricated

◆ Feature

Various operation tools can be supplied in attaching valve as the demand of customer. At order, please indicate a operation tool that is a demand for the operating condition of the valve, and contact with an OSV sales engineer for the definite choice of the operation tool.

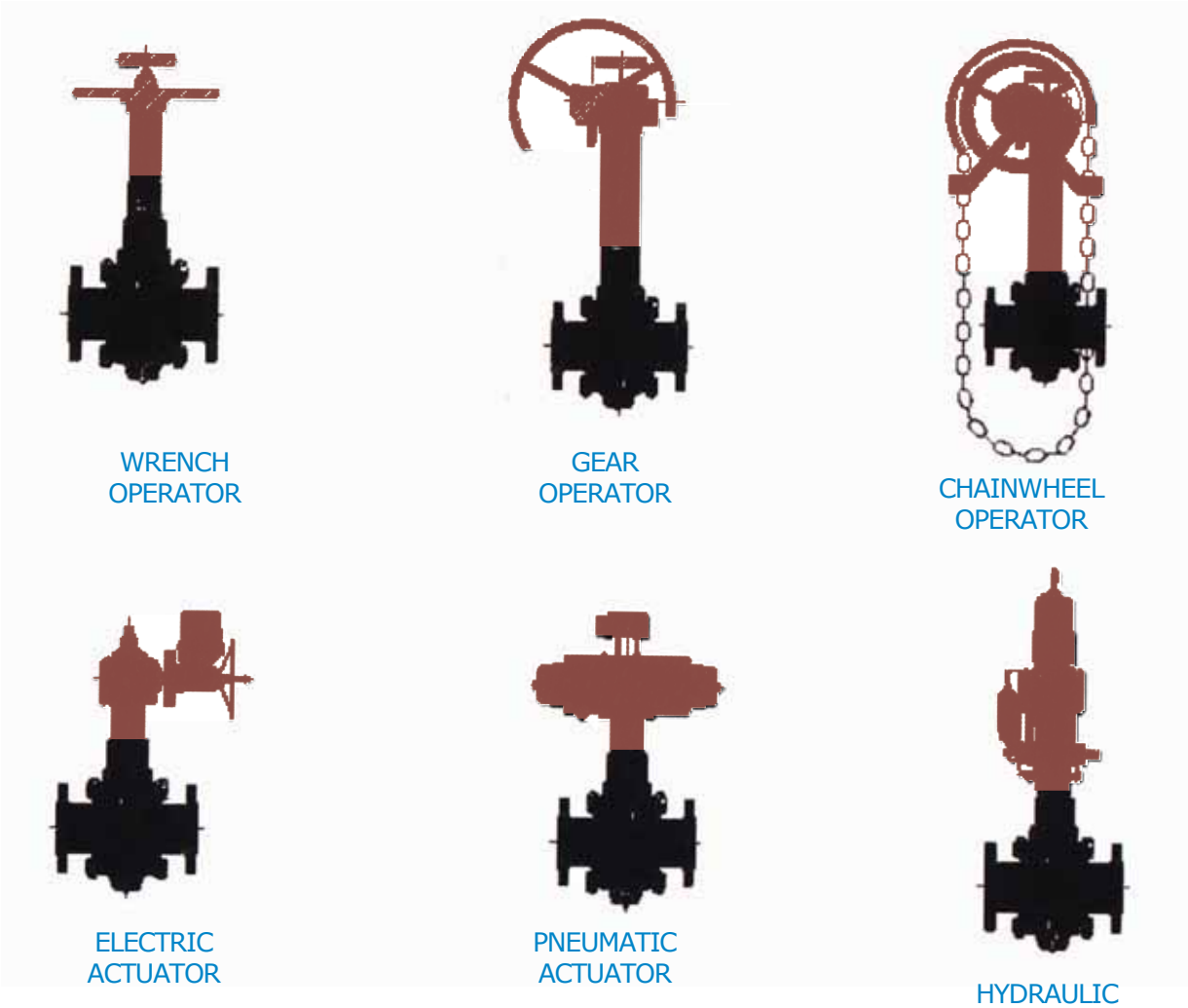

Certificate of Registration