ASAHI YUKIZAI



ASAHI AV

ASAHI YUKIZAI CORPORATION

General Catalog (Valves)

ASAHI AV **will not change.**

—— What we have maintained since the establishment of the company in 1945. It is a "sincere attitude toward customers". We have contributed to our customers and thereby to the society by developing products that meet customers' demands for performance, including corrosion, chemical, abrasion and thermal resistances and durability, and by providing various suggestions and thorough after-sales services.

We will not stop moving forward. We will continue to respond to the trust placed in us by customers.

ASAHI AV will offer full support to our customers in the future as well.

ASAHI AV **will change.**

—— The technologies we have developed, the products we have produced and the trust we have gained from our customers are the sources of our pride.

However, we are not satisfied with these developments. We will be sensitive to market changes and technology advances to produce better products and thereby further contribute to the society.

As the pioneer of the industry, ASAHI AV will evolve so that we continue to be trusted and chosen by customers all over the world.

ASAHI AV



ASAHI AV General Catalog (Valves)

INDEX

P. 005 TYPES AND FEATURES OF MAJOR ASAHI AV VALVES

P. 006 DIFFERENCES BETWEEN PNEUMATIC AND ELECTRIC TYPES / TYPES OF PLASTIC AND RUBBER MATERIALS AND THE PARTS USING THEM / CERTIFICATES

P. 007 SYSTEMATIC CHART

P. 013 DIAPHRAGM VALVE

P. 015 DIAPHRAGM VALVE TYPE 14

P. 021 TRUE UNION DIAPHRAGM VALVE TYPE 14

P. 025 DIAPHRAGM VALVE TYPE 15

P. 031 DIAPHRAGM VALVE TYPE 72

P. 035 DIAPHRAGM VALVE (TYPE AI)

P. 035 TRUE UNION DIAPHRAGM VALVE (TYPE AI)

P. 037 DIAPHRAGM VALVE TYPE 16

P. 039 OPTION

P. 041 BALL VALVE

P. 043 BALL VALVE TYPE 21, 21α

P. 053 WATER BALL VALVE

P. 057 3 WAY BALL VALVE TYPE 23

P. 063 3 WAY BALL VALVE TYPE 23 H

P. 065 LAB COCK

P. 067 COMPACT BALL VALVE TYPE 27

P. 071 BUTTERFLY VALVE

P. 073 BUTTERFLY VALVE TYPE 57

P. 079 BUTTERFLY VALVE TYPE 56

P. 083 BUTTERFLY VALVE TYPE 75

P. 087 BUTTERFLY VALVE TYPE 56D, 75D

P. 090 BUTTERFLY VALVE TYPE 58

P. 091 BUTTERFLY VALVE TYPE 55

P. 095 BUTTERFLY VALVE TYPE 55IS

P. 097 LUG BUTTERFLY VALVE TYPE 57L

P. 099 LUG BUTTERFLY VALVE TYPE 57TL

P. 101 PDCPD LARGE SIZE BUTTERFLY VALVE

P. 104 ROTARY DAMPER

CONTROL VALVE

P. 111 CONTROL VALVE

ACTUATOR

PNEUMATIC

P. 117 TYPE AN

P. 118 TYPE AV

P. 120 TYPE AI

P. 122 TYPE AP

P. 123 TYPE AA

P. 124 TYPE TA, TYPE TW

P. 125 TYPE VC

ELECTRIC

P. 125 TYPE H

P. 127 TYPE M

P. 131 TYPE S

P. 139 TYPE T

P. 143 TYPE V

P. 145 CHECK VALVE

P. 147 SWING CHECK VALVE

P. 149 WAFER CHECK VALVE

P. 151 BALL CHECK VALVE

P. 153 TRUE UNION BALL CHECK VALVE

P. 155 BALL FOOT VALVE

OTHERS

P. 157 STOP VALVE

P. 161 CONSTANT FLOW VALVE

P. 163 NEEDLE VALVE

P. 165 SELF CONTROL VALVE PRESSURE REDUCING TYPE

P. 166 SELF CONTROL VALVE PRESSURE RELIEF TYPE

P. 167 SELF CONTROL VALVE PRESSURE RETAINING TYPE

P. 168 GAUGE VALVE

P. 169 SEDIMENT STRAINER (TYPE Y)

WATER/WASTEWATER- AND AGRICULTURE-RELATED

GATE VALVE STANDARD TYPE (TYPE P)

P. 171 INSIDE SCREW CAP TYPE

P. 173 INSIDE SCREW ROUND HANDLE TYPE

GATE VALVE SOFT SEAL TYPE (TYPE S)

P. 175 SOFT SEAL VALVE TYPE 66

P. 177 INSIDE SCREW CAP TYPE

P. 179 INSIDE SCREW ROUND HANDLE TYPE

P. 181 OUTSIDE SCREW ROUND HANDLE TYPE

GATE VALVE

P. 183 OUTSIDE SCREW SECTION VALVE (FOR VACUUM SEWAGE)

P. 185 AIR RELEASE VALVE / ISOLATING VALVE AUTOMATIC WATER PLUG

P. 187 AUTOMATIC WATER FEEDING VALVE

P. 189 ALFALFA VALVE® TYPE 82

P. 190 ROTARY ANGLE VALVE

P. 191 ANGLE BUTTERFLY VALVE TYPE 80 mm, 100 mm

P. 192 FLOW METER

P. 193 ULTRASONIC-VORTEX FLOW METER (ASUSV SERIES)

P. 195 IMPELLER FLOW METER (ASIP80 SERIES)

P. 196 IMPELLER FLOW METER (ASSPX SERIES)

P. 197 INSERTION ELECTROMAGNETIC FLOW METER (ASEX80 SERIES)

P. 198 ULTRASONIC FLOW METER (DOPPLER ULTRASONIC FLOW METER)

P. 200 ULTRASONIC FLOW METER (TIME DIFFERENCE ULTRASONIC FLOW METER)

APPENDICES

P. 203 WORKING PRESSURE VS. TEMPERATURE

P. 215 Cv VALUE FOR EACH OPENING DEGREE

P. 221 BOLT DIMENSIONS FOR PIPING

P. 225 PRODUCT WEIGHT LIST (REFERENCE)

P. 237 PROPER FLOW RANGE

P. 239 PRODUCT CERTIFICATION TARGET LIST

P. 240 ASAHI AV MANUAL VALVE DISCONTINUED PRODUCT LIST

P. 240 REVISED RECORD

P. 241 PRECAUTIONS IN HANDLING AND USE

P. 244 WARRANTY INFORMATION OF OUR PRODUCTS

P. 244 PRECAUTIONS TO TAKE WHEN EXPORTING OUR PRODUCTS

FOR USE OF THIS CATALOG

- FOR COMPARISON AND EXAMINATION OF TYPE/APPLICATIONS AND MATERIALS, SEE "**SYSTEMATIC CHART (P.007)**".
- EACH VALVE PAGE CONTAINS **"BASIC VALVE SPECIFICATIONS", "PRODUCT MODEL CODE LIST", "DRAWING" AND "STANDARD LIST (JIS/DIN/ANSI)".**
- THE ACTUATOR PAGE CONTAINS **"BASIC ACTUATOR SPECIFICATIONS" AND "WIRING DIAGRAM (ELECTRIC)".**

TYPES AND FEATURES OF MAJOR ASAHI/AV VALVES

Various other types of valves are also available.

	FULLY CLOSED STATE	FULLY OPEN STATE	INTENDED USE	MANUAL VALVE VALVE TYPE	USE AS AUTOMATIC VALVE
DIAPHRAGM VALVE OPENS AND CLOSES THE GATE AT THE CENTER OF THE VALVE BY MOVING UP AND DOWN THE DIAPHRAGM. ・THE FLOW MAY BE EITHER FROM THE RIGHT OR LEFT.	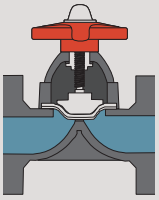	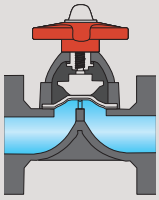	・INSULATES THE WETTED PART FROM LOW-CONTAMINATION GREASE AND METAL PARTS ・FLOW RATE CONTROL ・SLURRY FLUID	ROUND HANDLE TYPE	AVAILABLE
BALL VALVE OPENS AND CLOSES THE FLOW PATH BY TURNING THE SPHERICAL VALVE ELEMENT 90°. ・IN PRINCIPLE, THE FLOW MAY BE EITHER FROM THE RIGHT OR LEFT. ・THE FLOW IS STRAIGHT.	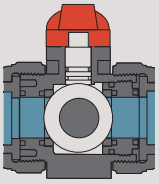	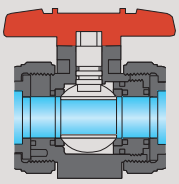	・LOW PRESSURE LOSS ・SWITCHING OF FLOW DIRECTION (3 WAY BALL VALVE) ・ON-OFF	LEVER TYPE	AVAILABLE
BUTTERFLY VALVE OPENS AND CLOSES THE FLOW PATH BY TURNING THE DISC VALVE ELEMENT 90°. ・THE FLOW MAY BE EITHER FROM THE RIGHT OR LEFT. ・ALTHOUGH DIVIDED INTO TWO BY THE VALVE ELEMENT, THE FLOW IS ALMOST STRAIGHT.	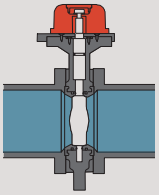	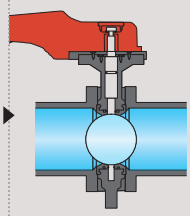	・LARGE FLOW RATE ・SPACE SAVING ・SLURRY FLUID ・LOW PRESSURE LOSS ・FLOW RATE CONTROL	LEVER TYPE GEAR TYPE	AVAILABLE
SWING CHECK VALVE BACKWARD FLOW OF THE FLUID MAKES THE VALVE ELEMENT PRESSED ONTO THE VALVE SEAT, WHICH PREVENTS BACKFLOW. ・THE DIRECTION OF FLOW IS FIXED. ・THE FLOW IS ALMOST STRAIGHT.	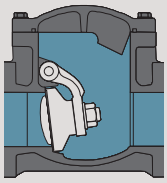	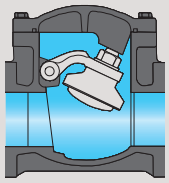	・BACK-FLOW PREVENTION	——	NOT AVAILABLE
STOP VALVE (GLOBE VALVE) THE VALVE ELEMENT SHUTS OFF THE FLUID TO CONTROL OPEN AND CLOSE. ・THE DIRECTION OF FLOW IS FIXED. ・THE FLOW FORMS AN S SHAPE.	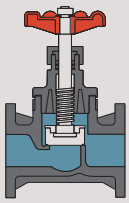	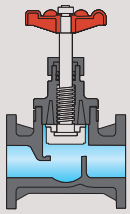	・HIGH ACCURACY CONTROL	ROUND HANDLE TYPE	AVAILABLE (CONTROL VALVE)
GATE VALVE THE VALVE ELEMENT BLOCKS THE FLUID PASSAGE PERPENDICULARLY TO CONTROL OPEN AND CLOSE. ・THE FLOW MAY BE EITHER FROM THE RIGHT OR LEFT. ・THE FLOW IS STRAIGHT.	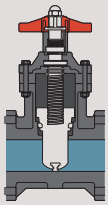	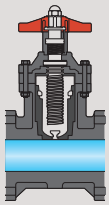	・LOW PRESSURE LOSS ・ON-OFF	ROUND HANDLE TYPE CAP TYPE	NOT AVAILABLE

DIFFERENCES BETWEEN PNEUMATIC AND ELECTRIC TYPES OF AUTOMATIC VALVES

	ADVANTAGES	ACTUATOR TYPE
PNEUMATIC	• LOWER PRICE THAN ELECTRIC TYPE. • SIMPLE STRUCTURE ALLOWING GOOD MAINTAINABILITY • QUICK OPENING AND CLOSING • FREELY ADJUSTABLE OPEN/CLOSE SPEED (OPTIONAL) • CONTROL IS ALSO AVAILABLE AT AN INTERMEDIATE OPENING POSITION (OPTIONAL)	TYPE AN, TYPE AP  TYPE AI, TYPE AD, TYPE AV  TYPE AA  TYPE TA 
ELECTRIC	• CAN BE INSTALLED MORE EASILY THAN PNEUMATIC TYPE (REQUIRING RELATIVELY SIMPLE INSTALLATION WORK) • EASY TO ASSEMBLE SEQUENCES • EASY TO OBTAIN HIGH OUTPUT BY CHANGING GEAR REDUCTION RATIO • CAN BE HOUSED IN THE ACTUATOR EVEN WITH OPTIONS.	TYPE T  TYPE M  TYPE S  TYPE H 

TYPES OF PLASTIC AND RUBBER MATERIALS AND THE PARTS USING THEM

PLASTIC MATERIALS		WORKING TEMPERATURE RANGE	MAJOR USED PARTS
U-PVC	POLYVINYL CHLORIDE PLASTIC	0～ 60℃	BODY, VALVE ELEMENT, PIPE CONNECTION (MAINLY WETTED PARTS)
HI-PVC	HIGH-IMPACT POLYVINYL CHLORIDE PLASTIC	−10～ 60℃	
C-PVC (HT)	THERMAL-RESISTANT POLYVINYL CHLORIDE PLASTIC	0～ 90℃	
PP	POLYPROPYLENE	−20～ 90℃	
PVDF	VINYLIDENE FLUORIDE PLASTIC	−40～120℃	
PPG	GLASSFIBER REINFORCED POLYPROPYLENE	−20～120℃	BONNET

RUBBER MATERIALS		HEAT-RESISTANT TEMPERATURE	MAJOR USED PARTS
EPDM	ETHYLENE PROPYLENE RUBBER	120℃	SEALING PARTS (DIAPHRAGMS AND O-RINGS)
FKM	FLUORORUBBER	180℃	
PTFE	POLY TETRA FLUORO ETHYLENE	300～350℃	


U-PVC


C-PVC


PP


PVDF

NOTE The working temperature range and heat-resistance temperature show the range in which the materials can be used, and therefore are not applicable to all the valves. The allowable temperature of each valve is determined according to its structure and sealing materials. See the catalogs for details.

CERTIFICATES

Certificates and copies of certificate may be delivered.
Contact our sales representative for request.

Certificates

CE marking (PED:Pressure Equipment Directive) Declaration of Conformity

Contained chemical substance investigation (RoHS, REACH, MSDSplus, etc.)

Material certificate

SDS (MSDS)

Test report / certificate according to Japanese Food Sanitation Act (Japanese only)

Copy of certificate — AS OF FEBRUARY 1, 2017

ISO9001 certificate

ISO14001 certificate

NK (Nippon Kaiji Kyokai)

ABS(American Bureau of Shipping)

NSF certification (NSF/ANSI61 Drinking water components-health Effects)

JIS product certificate (Japanese only)

For details of applicable products and certificates other than the above, contact us.


PED


NK


ABS


NSF

SYSTEMATIC CHART

DIAPHRAGM VALVE

	MODEL		ACTUATION TYPE	ACTUATOR	MODEL	SIZE
BASIC TYPE	TYPE 14	P.015	MANUAL			15mm — 100mm
			AUTOMATIC	PNEUMATIC	TYPE AN	15mm — 50mm
					TYPE AV	65mm — 100mm
					TYPE AP	65mm — 100mm
				ELECTRIC	TYPE H	15mm — 100mm
					TYPE M	15mm — 100mm
	TRUE UNION TYPE 14	P.021	MANUAL			15mm — 50mm
			AUTOMATIC	PNEUMATIC	TYPE AN	15mm — 50mm
				ELECTRIC	TYPE H	15mm — 50mm
					TYPE M	15mm — 50mm
	TYPE 15	P.025	MANUAL			125mm — 150mm
			AUTOMATIC	PNEUMATIC	TYPE AV	125mm — 150mm
				ELECTRIC	TYPE H	125mm — 150mm
					TYPE S	125mm — 150mm
	TYPE 72	P.031	MANUAL			200mm — 250mm
			AUTOMATIC	PNEUMATIC	TYPE AV	200mm — 250mm
				ELECTRIC	TYPE S	200mm — 250mm
BALANCED TYPE	TYPE AI TRUE UNION TYPE AI	P.035	AUTOMATIC	PNEUMATIC	TYPE AI	15mm — 50mm
HIGH DURABILITY	TYPE 16	P.037	AUTOMATIC	PNEUMATIC	TYPE AD	15mm — 50mm

BALL VALVE

	MODEL		ACTUATION TYPE	ACTUATOR	MODEL	SIZE
FOR CHEMICALS	TYPE 21α	P.043	MANUAL			15mm — 50mm
			AUTOMATIC	PNEUMATIC	TYPE TA	15mm — 50mm
					TYPE AA	15mm — 50mm
				ELECTRIC	TYPE T	15mm — 50mm
	TYPE 21	P.043	MANUAL			15mm — 100mm
			AUTOMATIC	PNEUMATIC	TYPE TA	15mm — 100mm
					TYPE AA	15mm — 50mm
				ELECTRIC	TYPE T	15mm — 100mm
	TYPE 23 (3 WAY VALVE)	P.057	MANUAL			15mm — 100mm
			AUTOMATIC	PNEUMATIC	TYPE TA	15mm — 100mm
				ELECTRIC	TYPE T	15mm — 100mm
	TYPE 23H	P.063	MANUAL			25mm — 40mm
	LAB COCK	P.065	MANUAL			13mm — 15mm
	COMPACT BALL TYPE 27	P.067	MANUAL			13mm — 50mm
FOR WATER	WATER BALL VALVE	P.053	MANUAL			15mm — 50mm
			AUTOMATIC	PNEUMATIC	TYPE VC	15mm — 50mm
				ELECTRIC	TYPE V	15mm — 50mm

	BODY MATERIAL					SEAL MATERIAL				CONNECTION				STANDARD * FOR INFORMATION ABOUT BS, CONTACT US.			MEMO
	U-PVC	C-PVC	PP	PVDF	OTHERS	EPDM	PTFE	FKM	OTHERS	SOCKET	THREADED	SPIGOT	FLANGED	JIS	DIN	ANSI	
	●	●	●	●	●	●	●						●	●	●	●	
	●	●	●	●		●	●						●	●	●	●	
	●	●	●	●		●	●						●	●	●	●	
	●	●	●	●		●	●						●	●	●	●	
	●	●	●	●		●	●						●	●	●	●	
	●	●	●	●		●	●						●	●	●	●	
	●	●	●	●	●	●	●	●		●	●	●		●	●	●	
	●	●	●	●		●	●	●		●	●	●		●	●	●	
	●	●	●	●		●	●	●		●	●	●		●	●	●	
	●	●	●	●		●	●	●		●	●	●		●	●	●	
	●		●	●	●	●	●						●	●	●	●	
	●		●	●		●	●						●	●	●	●	
	●		●	●		●	●						●	●	●	●	
	●		●	●		●	●						●	●	●	●	
	●		●	●	●	●	●						●	●	●	●	
	●		●	●		●	●						●	●	●	●	
	●		●	●		●	●						●	●	●	●	
	●	●	●	●		●	●	●					●	●	●	●	
	●	●	●	●		●	●	●		●	●	●		●	●	●	
	●					●	●	●		●	●		●	●	●	●	

	BODY MATERIAL					SEAL MATERIAL				CONNECTION				STANDARD * FOR INFORMATION ABOUT BS, CONTACT US.			MEMO
	U-PVC	C-PVC	PP	PVDF	OTHERS	EPDM	PTFE	FKM	OTHERS	SOCKET	THREADED	SPIGOT	FLANGED	JIS	DIN	ANSI	
	●	●				●		●		●	●	●	●	●	●	●	
	●	●				●		●		●	●	●	●	●	●	●	
	●	●				●		●		●	●	●	●	●	●	●	
	●	●				●		●		●	●	●	●	●	●	●	
	●	●	●	●		●		●		●	●	●	●	●	●	●	
	●	●	●	●		●		●		●	●	●	●	●	●	●	
			●	●		●		●		●	●	●	●	●	●	●	
	●	●	●	●		●		●		●	●	●	●	●	●	●	
	●	●	●	●		●		●		●	●	●	●	●	●	●	
	●	●	●	●		●		●		●	●	●	●	●	●	●	
	●	●	●	●		●		●		●	●	●	●	●	●	●	
			●			●		●		●	●	●	●	●	●	●	
	●					●	●	●			●			●	●	●	
	●	●				●		●		●	●			●	●	●	
	●					●				●	●			●			
	●					●				●	●			●			
	●					●				●	●			●			

BUTTERFLY VALVE

	MODEL		ACTUATION TYPE	ACTUATOR	MODEL	SIZE
RUBBER SHEET	TYPE 57	P.073	MANUAL			40mm — 350mm
			AUTOMATIC	PNEUMATIC	TYPE TA	40mm — 350mm
				ELECTRIC	TYPE T	40mm — 350mm
					TYPE S	40mm — 350mm
	TYPE 56	P.079	MANUAL			400mm
			AUTOMATIC	PNEUMATIC	TYPE TA	400mm
				ELECTRIC	TYPE S	400mm
	TYPE 75	P.083	MANUAL			450mm — 600mm
			AUTOMATIC	PNEUMATIC	TYPE TW	450mm — 600mm
				ELECTRIC	TYPE S	450mm — 600mm
	TYPE 58	P.090	MANUAL			700mm
	PDCPD LARGE SIZE	P.101	MANUAL			700mm — 1,200mm
			AUTOMATIC	ELECTRIC	TYPE S	700mm — 1,200mm
	TYPE 57L	P.097	MANUAL			80mm — 250mm
	56D, 75D (HIGH PRESSURE RESISTANCE)	P.087	MANUAL			400mm — 600mm
			AUTOMATIC	PNEUMATIC	TYPE TW	400mm — 600mm
				ELECTRIC	TYPE S	400mm — 600mm
	TYPE 57TL (LUG CONNECTION TAP HOLE)	P.099	MANUAL			80mm — 300mm
PTFE SHEET	TYPE 55 (ORIGINAL FACE-TO-FACE DIMENSION)	P.091	MANUAL			50mm — 250mm
			AUTOMATIC	PNEUMATIC	TYPE TA	50mm — 250mm
				ELECTRIC	TYPE T	50mm — 250mm
					TYPE S	50mm — 250mm
	TYPE 55IS (ISO FACE-TO-FACE DIMENSION)	P.095	MANUAL			50mm — 200mm
			AUTOMATIC	PNEUMATIC	TYPE TA	50mm — 200mm
				ELECTRIC	TYPE T	50mm — 200mm
					TYPE S	50mm — 200mm
DAMPER	ROTARY DAMPER TYPE 57, 56, 75	P.104	MANUAL			40mm — 600mm
			AUTOMATIC	PNEUMATIC	TYPE TA	40mm — 600mm
				ELECTRIC	TYPE T	40mm — 600mm
					TYPE S	40mm — 600mm

CONTROL VALVE

	MODEL		ACTUATION TYPE	ACTUATOR	MODEL	SIZE
CONTROL	CONTROL VALVE	P.111	AUTOMATIC	PNEUMATIC	TYPE AV	15mm — 100mm
				ELECTRIC	TYPE M	

	BODY MATERIAL					SEAL MATERIAL				CONNECTION	STANDARD * FOR INFORMATION ABOUT BS, CONTACT US.			MEMO
	U-PVC	C-PVC	PP	PVDF	OTHERS	EPDM	PTFE	FKM	OTHERS	WAFER	JIS	DIN	ANSI	
	●		●	●		●		●		●	●	●	●	
	●		●	●		●		●		●	●	●	●	
	●		●	●		●		●		●	●	●	●	
	●		●	●		●		●		●	●	●	●	
			●	●		●		●		●	●	●	●	
			●	●		●		●		●	●	●	●	
			●	●		●		●		●	●	●	●	
			●	●		●		●		●	●	●	●	
			●	●		●		●		●	●	●	●	
			●	●		●		●		●	●	●	●	
					●	●		●		●	●	●	●	
					●	●				●	●	●	●	
					●	●				●	●	●	●	
					●	●		●		●	●	●		
					●	●		●		●	●	●	●	
					●	●		●		●	●	●	●	
					●	●		●		●	●	●	●	
	●					●		●		●			●	
					●		●			●	●	●	●	
					●		●			●	●	●	●	
					●		●			●	●	●	●	
					●		●			●	●	●	●	
					●		●			●	●	●	●	
					●		●			●	●	●	●	
					●		●			●	●	●	●	
	●		●	●		●	●	●		●	●	●	●	
	●		●	●		●	●	●		●	●	●	●	
	●		●	●		●	●	●		●	●	●	●	
	●		●	●		●	●	●		●	●	●	●	

	BODY MATERIAL					SEAL MATERIAL				CONNECTION				STANDARD * FOR INFORMATION ABOUT BS, CONTACT US.			MEMO
	U-PVC	C-PVC	PP	PVDF	OTHERS	EPDM	PTFE	FKM	OTHERS	SOCKET	THREADED	SPIGOT	FLANGED	JIS	DIN	ANSI	
	●			●		●		●	●				●	●	●	●	
	●			●		●		●	●				●	●	●	●	

CHECK VALVE

	MODEL		OPERATING SYSTEM	SIZE
CHECK VALVE	SWING CHECK VALVE	P.147	—	15mm — 200mm
	WAFER CHECK VALVE	P.149	—	80mm — 300mm
	BALL CHECK VALVE	P.151	—	15mm — 100mm
	TRUE UNION BALL CHECK VALVE	P.153	—	15mm — 50mm
	BALL FOOT VALVE	P.155	—	15mm — 100mm

OTHERS

	MODEL		OPERATING SYSTEM	SIZE
OTHERS	STOP VALVE (GLOBE VALVE)	P.157	MANUAL	15mm — 100mm
	CONSTANT FLOW VALVE	P.161	MANUAL	15mm — 100mm
	NEEDLE VALVE	P.163	MANUAL	15mm — 25mm
	SELF CONTROL VALVE PRESSURE REDUCING TYPE	P.165	—	15mm — 50mm
	SELF CONTROL VALVE PRESSURE RELIEF TYPE	P.166	—	15mm — 50mm
	SELF CONTROL VALVE PRESSURE RETAINING TYPE	P.167	—	15mm — 50mm
	GAUGE VALVE	P.168	MANUAL	20mm — 25mm
	SEDIMENT STRAINER (TYPE Y)	P.169	—	15mm — 100mm

WATER/WASTEWATER- AND AGRICULTURE-RELATED	MODEL		ACTUATION TYPE	OPERATING SYSTEM	SIZE
GATE VALVE (INSIDE SCREW TYPE)	STANDARD TYPE (TYPE P)	P.171	MANUAL	CAP TYPE	32mm — 350mm
				ROUND HANDLE TYPE	32mm — 350mm
	SOFT SEAL TYPE 66 (TYPE S) JWWA	P.175	MANUAL	CAP TYPE	32mm — 150mm
	SOFT SEAL (TYPE S) JWWA	P.177	MANUAL	CAP TYPE	65mm — 200mm
	SOFT SEAL (TYPE S)	P.179	MANUAL	CAP TYPE	65mm — 200mm
				ROUND HANDLE TYPE	50mm — 200mm
GATE VALVE (OUTSIDE SCREW TYPE)	SOFT SEAL (TYPE S)	P.181	MANUAL	ROUND HANDLE TYPE	32mm — 250mm
	OUTSIDE SCREW SECTION VALVE (FOR VACUUM SEWAGE)	P.183	MANUAL	CAP TYPE	100mm — 250mm
AIR RELEASE VALVE, ISOLATING VALVE	AIR RELEASE VALVE, ISOLATING VALVE	P.185	—		25mm — 200mm
AUTOMATIC WATER FEEDING VALVE	AUTOMATIC WATER FEEDING VALVE	P.187	—		50mm — 80mm
OTHERS	ALFALFA VALVE® TYPE 82	P.189	MANUAL		50mm — 100mm
	ROTARY ANGLE VALVE	P.190	MANUAL		50mm — 80mm
	ANGLE BUTTERFLY VALVE	P.191	MANUAL		80mm — 100mm

FLOW METER

	SERIES			SIZE
FLOW METER	ULTRASONIC-VORTEX FLOW METER	P.193	ASUSV SERIES	20mm — 100mm
	IMPELLER FLOW METER	P.195	ASIP80 SERIES	15mm — 150mm
		P.196	ASSPX SERIES	10mm — 25mm
	INSERTION ELECTROMAGNETIC FLOW METER	P.197	ASEX80 SERIES	25mm — 150mm
	ULTRASONIC FLOW METER	P.198	DOPPLER ULTRASONIC FLOW METER	—
		P.200	TIME DIFFERENCE ULTRASONIC FLOW METER	—

	BODY MATERIAL					SEAL MATERIAL				CONNECTION				STANDARD * FOR INFORMATION ABOUT BS, CONTACT US.			MEMO
	U-PVC	C-PVC	PP	PVDF	OTHERS	EPDM	PTFE	FKM	OTHERS	SOCKET	THREADED	SPIGOT	FLANGED	JIS	DIN	ANSI	
	HI-PVC		●	●		●		●	●				●	●	●	●	
	●					●		●					WAFER	●	●	●	
	●	●	●	●		●		●		●	●		●	●	●	●	
	●	●	●	●		●		●		●	●	●	●		●	●	
	●	●	●	●		●		●		●	●		●	●	●	●	

	BODY MATERIAL					SEAL MATERIAL				CONNECTION				STANDARD * FOR INFORMATION ABOUT BS, CONTACT US.			MEMO
	U-PVC	C-PVC	PP	PVDF	OTHERS	EPDM	PTFE	FKM	OTHERS	SOCKET	THREADED	SPIGOT	FLANGED	JIS	DIN	ANSI	
	●		●			●	●		●	●	●		●	●	●	●	
	●					●			●				●	●	●	●	
	●					●		●					●	●	●	●	
	●					●				●	●		●	●		●	
	●					●			●	●	●		●	●		●	
	●					●			●	●	●		●	●		●	
	●		●			●	●		●				●	●	●	●	
	●					●		●	●	●	●		●	●	●	●	

	BODY MATERIAL			SEAL MATERIAL			CONNECTION				STANDARD * FOR INFORMATION ABOUT BS, CONTACT US.			MEMO
	HI-PVC	U-PVC	OTHERS	EPDM	SBR	OTHERS	SOCKET	THREADED	SPIGOT	FLANGED	JIS	DIN	ANSI	
	●			●				●		●	●	●	●	
	●			●				●		●	●	●	●	
	●				●			●		●	●	●	●	
	●				●					●	●	●	●	
	●				●					●	●	●	●	
	●				●					●	●	●	●	
	●				●	NBR				●	●	●	●	
	●				●					●	●	●	●	
			●	●	●			●		●	●			
	●			●			●	●		●	●			
		●		●			●			●	●			
		●		●			●	●		●	●			
			●	●		●	●				●			

	BODY MATERIAL					SEAL MATERIAL				CONNECTION				STANDARD * FOR INFORMATION ABOUT BS, CONTACT US.			MEMO
	U-PVC	C-PVC	PP	PVDF	OTHERS	EPDM	PTFE	FKM	OTHERS	SOCKET	THREADED	SPIGOT	FLANGED	JIS	DIN	ANSI	
	●			●					●	WAFER			●	●			
	●	●			●	●		●		●			●	●			
			●		●	●		●			●			●			
	●				●	●		●		●			●	●			
					●												
					●												

ASAHI AV
DIAPHRAGM VALVE

P.015 DIAPHRAGM VALVE TYPE 14

P.021 TRUE UNION DIAPHRAGM VALVE TYPE 14

P.025 DIAPHRAGM VALVE TYPE 15

P.031 DIAPHRAGM VALVE TYPE 72

P.035 DIAPHRAGM VALVE TYPE AI

P.035 TRUE UNION DIAPHRAGM VALVE TYPE AI

P.037 DIAPHRAGM VALVE TYPE 16

P.039 OPTIONS





DIAPHRAGM VALVE LINEUP AUTOMATIC

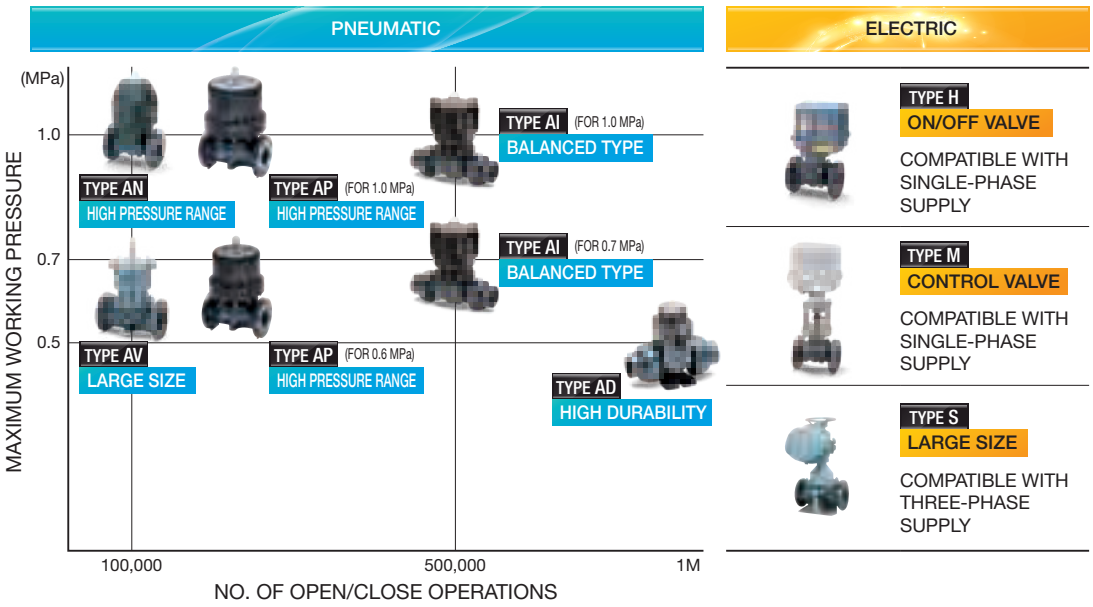

AVAILABLE OPTIONS AUTOMATIC

* Options other than those listed below are also available. Contact us for inquiry.

	PNEUMATIC					ELECTRIC		
	TYPE AN	TYPE AI	TYPE AD	TYPE AV	TYPE AP	TYPE H	TYPE M	TYPE S
SOLENOID VALVE	●	●		●	●			
FILTER REGULATOR	●	●		●	●			
SPEED CONTROLLER	●	●	●	●	●			
BYPASS VALVE	●	●		●	●			
LIMIT SWITCH	●	●	*	●	●			
OUTPUT CONTACT LIMIT SWITCH						STANDARD		●
E/P POSITIONER	●	●		●	●			
P/P POSITIONER	●	●		●	●			
E/E POSITIONER							STANDARD	●
MANUAL OVERRIDE	●	●		●	●	STANDARD	STANDARD	STANDARD
FULL OPENING ADJUSTMENT	●	●	● INDICATOR PROVIDED	●	●			
SPACE HEATER						STANDARD		STANDARD
POTENTIOMETER						●		●
R/I TRANSMITTER								●
SPECIAL PAINTING (ACTUATOR ONLY)				●		●	●	●
METAL INSERT PROVIDED (WITH ENSAT)	●	●		● UP TO 100mm	STANDARD	●	●	

* For information about the support for the limit switch (micro switch), contact us.


SOLENOID VALVE


SPEED CONTROLLER

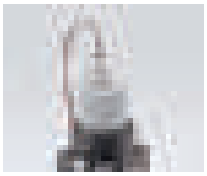
LIMIT SWITCH


E/P POSITIONER


FULL OPENING ADJUSTMENT

DIAPHRAGM VALVE TYPE 14

- NEAR-LINEAR FLOW CHARACTERISTICS
- A NEW TYPE OF RUBBER HAVING A HIGH RELIABILITY IN LEAKAGE PREVENTION IS USED FOR THE DIAPHRAGM AND CUSHION.
- THE ORIGINAL DESIGN ACHIEVES HIGH SEALING PERFORMANCE WITH LOW TORQUE.
- BAYONET STRUCTURE ALLOWING QUICK DIAPHRAGM REPLACEMENT
- EQUIPPED WITH A BOTTOM STAND ALLOWING EASY AND SECURE REPLACEMENT (See P. 69 for details.)

MANUAL



AUTOMATIC



BASIC SPECIFICATIONS

VALVE TYPE——**DIAPHRAGM VALVE TYPE 14**

SIZE——**15 mm—100 mm (1/2 inch—4 inch)**

BODY MATERIAL——**U-PVC** **C-PVC** **PP** **PVDF**

SEAL MATERIAL / DIAPHRAGM——**EPDM** **PTFE** **FKM** **etc.**

CONNECTION / FLANGED——**JIS10K, DIN PN10, ANSI CLASS150**

HIGH PURITY SERIES——**LUBRICANT FREE**

	FLUID TEMPERATURE	MAXIMUM WORKING PRESSURE (NORMAL TEMPERATURE) MPa{kgf/cm²}	CONNECTION METHOD FLANGED
U-PVC	0℃～ 60℃	1.0 {10.2}	○
C-PVC	0℃～ 90℃	1.0 {10.2}	○
PP	-20℃～ 90℃	1.0 {10.2}	○
PVDF	-40℃～120℃	1.0 {10.2}	○

NOTE The maximum working pressure is the value including the water hammer pressure. Be careful that the maximum working pressure is not exceeded during use.

* Concerning the allowable pressure for each temperature and material, see the technical documents at the end of this catalog.

* The diaphragm may become loose due to temperature changes during long storage, operation stop or while in use. Check the conditions and then retighten the bolts and nuts between the bonnet and the body to the "bonnet tightening torque". (Failure to do so may cause fluid leakage.)

PARTS LIST MANUAL

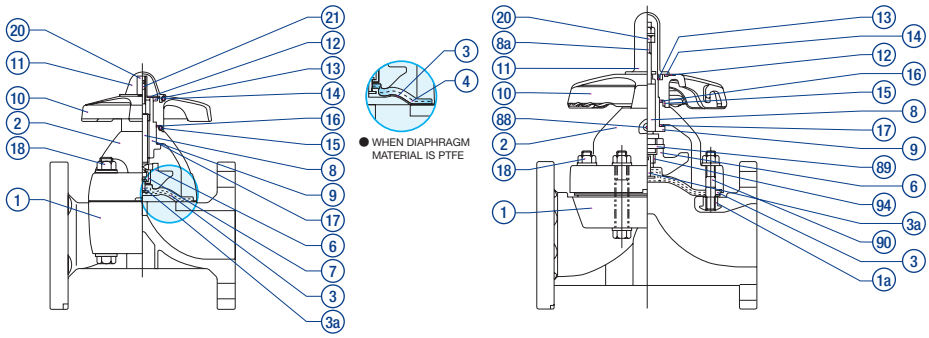

PART NO. / NAME	QTY	MATERIAL
①BODY	1	BODY——BONNET U-PVC——U-PVC C-PVC——PP PP——PP
②BONNET	1	PVDF——PPG(1) PVDF——PVDF
③DIAPHRAGM	1	EPDM, PTFE, etc.
3a EMBEDDED DIAPHRAGM FITTING	1	SUS304
④CUSHION(2)	1	EPDM
⑥COMPRESSOR	1	PVDF
⑦JOINT FITTING(3)	1	SUS304

PART NO. / NAME	QTY	MATERIAL
⑧STEM	1	C3604
8a DISPLAY LOT(4)	1	SUS304
⑨SLEEVE	1	C3604
⑩HANDLE	1	PP
⑪GAUGE COVER	1	PC
⑫NAMEPLATE	1	U-PVC
⑬C-SHAPED STOP RING	1	SUS304
⑭O-RING (A)	1	EPDM
⑮O-RING (B)	1	EPDM
⑯THRUST RING (A)	1	UHMWPE

PART NO. / NAME	QTY	MATERIAL
⑰THRUST RING (B)	1	UHMWPE
⑱BOLT/NUT (A)	4	SUS304
⑳STOPPER	1	C3604(3), SUS304(4)
㉑SCREW(3)	1	SUS304
88 GREASE NIPPLE(4)	1	C3604
89 COMPRESSOR PIN(4)	1	SUS304
90 STUD BOLT/NUT(4)	4	SUS304
94 COMPRESSOR	1	SUS304
1a STUD NUT(4)	4	C3604(5), SUS304(6)

NOTE (1) Bonnet PPG 15 – 100 mm: black. 125 – 250 mm: ivory. (2) is used when the diaphragm material is PTFE. (3) is used for sizes of 50 mm or less. (4) is used for sizes of 65 mm or more. (5) is used when the body material is U-PVC, C-PVC or PP. (6) is used when the body material is PVDF.

HANDLE ROTATION [FULL OPEN (ROTATION/LIFT) FULL CLOSE] MANUAL

SIZE	ROTATION
15mm (1/2inch)	3.3
20mm (3/4inch)	3.3
25mm (1inch)	4.0
32mm (1 1/4inch)	4.0
40mm (1 1/2inch)	5.0
50mm (2inch)	6.0
65mm (2 1/2inch)	9.0
80mm (3inch)	10.0
100mm (4inch)	10.0

COMPATIBLE ACTUATOR AUTOMATIC

PNEUMATIC TYPE AN — For detailed specifications, see P.117

PNEUMATIC TYPE AV — For detailed specifications, see P.118

PNEUMATIC TYPE AP — For detailed specifications, see P.122

ELECTRIC TYPE H — For detailed specifications, see P.126

ELECTRIC TYPE M — For detailed specifications, see P.127

PRODUCT MODEL CODE LIST — MANUAL

ACTUATION	TYPE	OPERATING SYSTEM	BODY MATERIAL	SEAL MATERIAL	CONNECTION	STANDARD	SIZE	HIGH PURITY SERIES
V	14	MH	*	*	F	*	***	1
V MANUAL VALVE	14 TYPE 14	MH ROUND HANDLE	U U-PVC C C-PVC P PP F PVDF G PVDF+PPG	E EPDM T PTFE	F FLANGED	1 JIS10K D DIN A ANSI	015 15mm ~ 100 100mm	1 LUBRICANT FREE

PRODUCT MODEL CODE LIST — AUTOMATIC

ACTUATION	TYPE	ACTUATOR TYPE	ACTION / POWER SOURCE	BODY MATERIAL	SEAL MATERIAL	CONNECTION	STANDARD	SIZE	HIGH PURITY SERIES
A	14	*	*	*	*	F	*	***	1
A AUTOMATIC VALVE	14 TYPE 14	PNEUMATIC N TYPE AN V TYPE AV P TYPE AP ELECTRIC H TYPE H M TYPE M	PNEUMATIC F DOUBLE ACTING G AIR TO OPEN H AIR TO OPEN (TYPE AP,For 1.0MPa) S AIR TO CLOSE ELECTRIC 1 Single-Phase 100V 2 Single-Phase 200V D DC24V	U U-PVC C C-PVC P PP F PVDF	E EPDM T PTFE	F FLANGED	1 JIS10K D DIN A ANSI	015 15mm ~ 100 100mm	1 LUBRICANT FREE

MANUAL

DIAPHRAGM VALVE TYPE 14

TYPE——V14MH

CONNECTION / FLANGED——JIS, DIN, ANSI

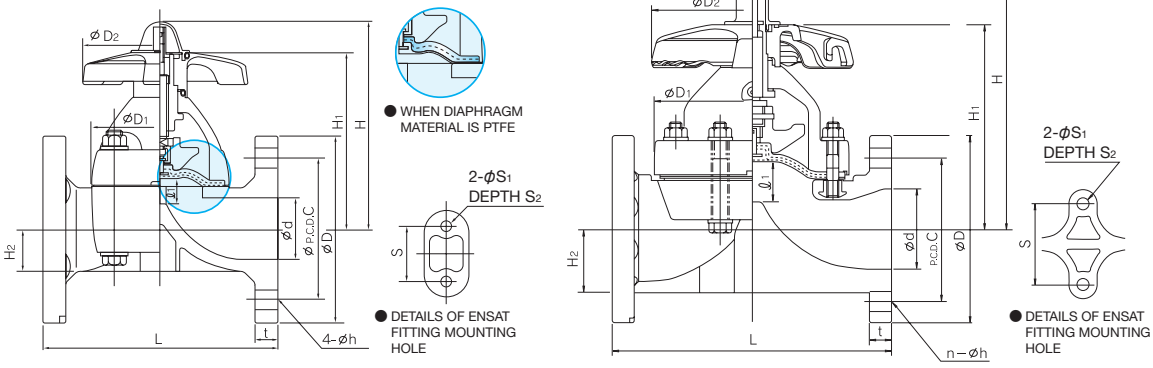

■ JIS, DIN (Unit: mm)

mm	d	D1	D2	ℓ1	H	H1	H2	S	S1	S2	JIS10K D	JIS10K C	JIS10K n	JIS10K h	JIS10K L	JIS10K t U-PVC C-PVC	JIS10K t PP PVDF	DIN PN10 D	DIN PN10 C	DIN PN10 n	DIN PN10 h	DIN PN10 L	DIN PN10 t U-PVC C-PVC	DIN PN10 t PP PVDF
15	16	54×66	100	10	104	86	19.5	25	7	13	95	70	4	15	110	12	12	95	65	4	14	130	12	12
20	20	54×66	100	10	106	88	17.5	25	7	13	100	75	4	15	120	13	13	105	75	4	14	150	13	13
25	25	67×80	100	12	111	93	18.5	25	7	13	125	90	4	19	130	13	13	115	85	4	14	160	13	13
32	32	67×80	100	12	116	97	22.5	25	7	13	135	100	4	19	142	16	16	140	100	4	18	180	16	16
40	40	108×108	156	21	177	144	27.5	45	9	15	140	105	4	19	180	16	16	150	110	4	18	200	20	20
50	52	123×123	156	25	191	158	36.0	45	9	15	155	120	4	19	210	20	20	165	125	4	18	230	22	22
65	67	175	220	34	266	188	61	85	11	20	175	140	4	19	250	22	23	185	145	4	18	290	22	22
80	78	201	220	42	280	202	63	100	15	28	185	150	8	19	280	22	23	200	160	8	18	310	24	24
100	100	241	257	50	329	241	78	120	15	28	210	175	8	19	340	22	24	220	180	8	18	350	24	26

■ ANSI (Unit: inch)

inch	mm	d	D1	D2	ℓ1	H	H1	H2	S	S1	S2	ANSI CLASS150 D	C	n	h	L GRINNELL STANDARD	L AV STANDARD	t U-PVC C-PVC	t PP PVDF
1/2	15	0.63	2.13×2.60	3.94	0.39	4.09	3.39	0.77	0.98	0.28	0.51	3.50	2.38	4	0.62	4.25	4.33	0.43	0.43
3/4	20	0.79	2.13×2.60	3.94	0.39	4.17	3.46	0.69	0.98	0.28	0.51	3.88	2.75	4	0.62	5.88	4.72	0.51	0.51
1	25	0.98	2.64×3.15	3.94	0.47	4.37	3.66	0.73	0.98	0.28	0.51	4.25	3.12	4	0.62	5.88	5.12	0.59	0.59
1 1/4	32	1.26	2.64×3.15	3.94	0.47	4.57	3.82	0.89	0.98	0.28	0.51	4.62	3.50	4	0.62	6.38	-	0.63	0.63
1 1/2	40	1.57	4.25×4.25	6.14	0.83	6.97	5.67	1.08	1.77	0.35	0.59	5.00	3.88	4	0.62	6.94	7.09	0.63	0.63
2	50	2.05	4.84×4.84	6.14	0.98	7.52	6.22	1.42	1.77	0.35	0.59	6.00	4.75	4	0.75	7.94	8.27	0.79	0.79
2 1/2	65	2.64	6.89	8.66	1.34	10.47	7.40	2.40	3.35	0.43	0.79	7.00	5.50	4	0.75	-	9.84	0.87	0.91
3	80	3.07	7.91	8.66	1.65	11.02	7.95	2.48	3.94	0.59	1.10	7.50	6.00	4	0.75	10.37	11.02	0.87	0.91
4	100	3.94	9.49	10.12	1.97	12.95	9.49	3.07	4.72	0.59	1.10	9.00	7.50	8	0.75	12.93	13.39	0.87	0.94

AUTOMATIC | PNEUMATIC | TYPE AN | DOUBLE ACTING | AIR TO OPEN | AIR TO CLOSE

DIAPHRAGM VALVE TYPE 14

TYPE——A14N

CONNECTION / FLANGED——JIS, DIN, ANSI

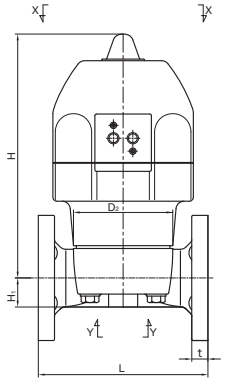

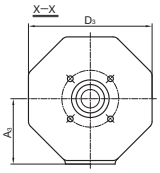

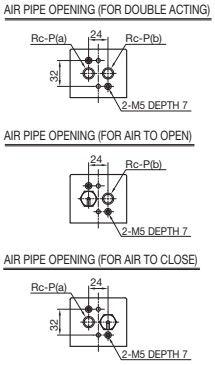

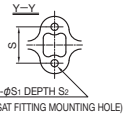

ACTUATOR SELECTION CHART

SIZE	ACTUATOR TYPE		
	DOUBLE ACTING	AIR TO OPEN	AIR TO CLOSE
15mm (1/2inch)	AN-1DA	AN-1AO	AN-1AS
20mm (3/4inch)			
25mm (1inch)	AN-2DA	AN-2AO	AN-2AS
32mm (1 1/4inch)			
40mm (1 1/2inch)	AN-3DA	AN-3AO	AN-3AS
50mm (2inch)	AN-4DA	AN-4AO	AN-4AS

For detailed specifications, see P.117

■ JIS, DIN (Unit: mm)

mm	D2	D3	H	H1	A3	S	S1	S2	P	JIS10K L	JIS10K t	DIN PN10 L	DIN PN10 t
15	54×66	130	186	19.5	68	25	7	13	1/4	110	12	130	12
20	54×66	130	188	17.5	68	25	7	13	1/4	120	13	150	13
25	67×80	130	193	18.5	68	25	7	13	1/4	130	13	160	13
32	67×80	130	197	22.5	68	25	7	13	1/4	142	16	180	16
40	108×108	174	293	27.5	92	45	9	15	1/4	180	16	200	20
50	123×123	174	302	36	92	45	9	15	1/4	210	20	230	22

■ ANSI (Unit: inch)

inch	mm	D2	D3	H	H1	A3	S	S1	S2	P	ANSI CLASS150 L GRINNELL STANDARD	ANSI CLASS150 L AV STANDARD	ANSI CLASS150 t
1/2	15	2.13×2.60	5.12	7.32	0.77	2.68	0.98	0.28	0.51	1/4	4.25	4.33	0.43
3/4	20	2.13×2.60	5.12	7.40	0.69	2.68	0.98	0.28	0.51	1/4	5.88	4.72	0.51
1	25	2.64×3.15	5.12	7.60	0.73	2.68	0.98	0.28	0.51	1/4	5.88	5.12	0.59
1 1/4	32	2.64×3.15	5.12	7.76	0.89	2.68	0.98	0.28	0.51	1/4	6.38	-	0.63
1 1/2	40	4.25×4.25	6.85	11.54	1.08	3.62	1.77	0.35	0.59	1/4	6.94	7.09	0.63
2	50	4.84×4.84	6.85	11.89	1.42	3.62	1.77	0.35	0.59	1/4	7.94	8.27	0.79

AUTOMATIC | PNEUMATIC | TYPE AV | DOUBLE ACTING | AIR TO OPEN | AIR TO CLOSE

DIAPHRAGM VALVE TYPE 14

TYPE——A14AV

CONNECTION / FLANGED——JIS, DIN, ANSI

(DOUBLE ACTING)

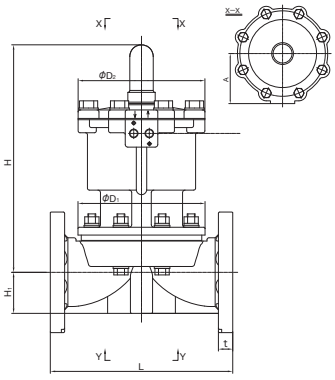

(AIR TO OPEN)

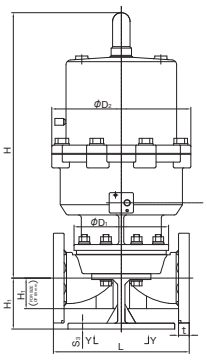

(AIR TO CLOSE)

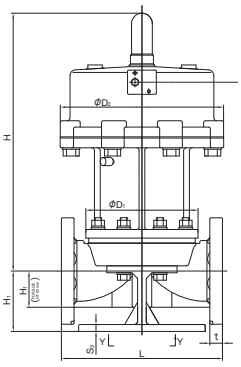

(DOUBLE ACTING)

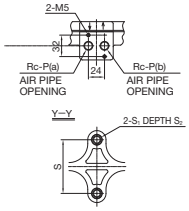

ACTUATOR SELECTION CHART

SIZE	ACTUATOR TYPE		
	DOUBLE ACTING	AIR TO OPEN	AIR TO CLOSE
65mm (2 1/2inch)	AV-1DA	AV-1AO	AV-1AS
80mm (3inch)	AV-2DA	AV-2AO	AV-2AS
100mm (4inch)	AV-3DA	AV-3AO	AV-3AS

For detailed specifications, see P.118

(AIR TO OPEN)

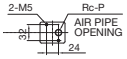

(AIR TO OPEN)
(AIR TO CLOSE)

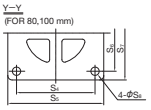

(AIR TO CLOSE)

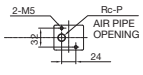

■ JIS、DIN (Unit：mm)

mm	D1	D2 DOUBLE ACTING	D2 AIR TO OPEN, AIR TO CLOSE	A DOUBLE ACTING	H DOUBLE ACTING	H AIR TO OPEN	H AIR TO CLOSE	H1 DOUBLE ACTING	H1 AIR TO OPEN, AIR TO CLOSE	S DOUBLE ACTING	S AIR TO OPEN, AIR TO CLOSE	S1 DOUBLE ACTING	S1 AIR TO OPEN, AIR TO CLOSE	S2 DOUBLE ACTING	S2 AIR TO OPEN, AIR TO CLOSE	S3 AIR TO OPEN, AIR TO CLOSE	S4 AIR TO OPEN, AIR TO CLOSE	S5 AIR TO OPEN, AIR TO CLOSE	S6 AIR TO OPEN, AIR TO CLOSE	S7 AIR TO OPEN, AIR TO CLOSE	S8 AIR TO OPEN, AIR TO CLOSE	P	JIS10K L	JIS10K t U-PVC C-PVC	JIS10K t PP PVDF	DIN PN10 L	DIN PN10 t U-PVC C-PVC	DIN PN10 t PP PVDF
65	171	208	280	103	323	473	423	61	61	85	85	M8	M8	15	15	-	-	-	-	-	-	1/4	250	22	23	290	22	22
80	195	208	305	103	354	550	455	63	109	100	-	M12	-	22	-	12	180	220	175	215	19	1/4	280	22	23	310	24	24
100	235	250	385	120	417	601	582	78	119	120	-	M12	-	22	-	15	230	270	220	260	19	1/4	340	22	24	350	24	26

■ ANSI (Unit：inch)

inch	mm	D1	D2 DOUBLE ACTING	D2 AIR TO OPEN, AIR TO CLOSE	A DOUBLE ACTING	H DOUBLE ACTING	H AIR TO OPEN	H AIR TO CLOSE	H1 DOUBLE ACTING	H1 AIR TO OPEN, AIR TO CLOSE	S DOUBLE ACTING	S AIR TO OPEN, AIR TO CLOSE	S1 DOUBLE ACTING	S1 AIR TO OPEN, AIR TO CLOSE	S2 DOUBLE ACTING	S2 AIR TO OPEN, AIR TO CLOSE	S3 AIR TO OPEN, AIR TO CLOSE	S4 AIR TO OPEN, AIR TO CLOSE	S5 AIR TO OPEN, AIR TO CLOSE	S6 AIR TO OPEN, AIR TO CLOSE	S7 AIR TO OPEN, AIR TO CLOSE	S8 AIR TO OPEN, AIR TO CLOSE	P	ANSI CLASS150 L GRINNELL STANDARD	ANSI CLASS150 L AV STANDARD	ANSI CLASS150 t U-PVC C-PVC	ANSI CLASS150 t PP PVDF
2 1/2	65	6.73	8.19	11.02	4.06	12.72	18.62	16.65	2.40	2.40	3.35	3.35	M8	M8	0.59	0.59	-	-	-	-	-	-	1/4	-	9.84	0.87	0.91
3	80	7.68	8.19	12.01	4.06	13.94	21.65	17.91	2.48	4.29	3.94	-	M12	-	0.87	-	0.47	7.09	8.66	6.89	8.46	0.75	1/4	10.37	11.02	0.87	0.91
4	100	9.25	9.84	15.16	4.72	16.42	23.66	22.91	3.07	4.69	4.72	-	M12	-	0.87	-	0.59	9.06	10.63	8.66	10.24	0.75	1/4	12.93	13.39	0.87	0.91

DIAPHRAGM VALVE TYPE14

AUTOMATIC



- LIGHTWIIGHT, COMPACT SIZE AND HIGH ANTI-CORROSION RESISTANCE DUE TO PLASTIC ACTUATOR MOUNTED.
- AIR PIPING IS COMPATIBLE WITH NAMUR STANDARD.
- OPTIONS ARE EASILY REMOVABLE/REPLACEABLE AND CAN BE MOUNTED LATER. (EXCEPT POSITIONER)
- EQUIPPED WITH STOPPER THAT CAN BE ADJUSTED AT FULL CLOSED POSITION.
- 0.6MPa OR 1.0MPa MODEL OF MAXIMUM WORKING PRESSURE AVAILABLE FOR FLUID PRESSURE CONDITION.

BASIC SPECIFICATIONS

VALVE TYPE——DIAPHRAGM VALVE TYPE14 PNEUMATIC TYPE AP

SIZE——65mm—100mm (21/2 inch—4 inch)

BODY MATERIAL——U-PVC / C-PVC / PP / PVDF

SEAL MATERIAL / DIAPHRAGM——EPDM / PTFE / FKM etc.

CONNECTION / FLANGED——JIS10K, DIN PN10, ANSI CLASS150

OPTION——PVDF CUSHION COVER MODEL, ELECTROLYTIC MODEL, EL MODEL

	FLUID TEMPERATURE	MAXIMUM WORKING PRESSURE (NORMAL TEMPERATURE) MPa{Kgf/cm2} FOR 1.0MPa	FOR 0.6MPa	CONNECTION METHOD FLANGED
U-PVC	0℃～60℃	1.0 {10.2}	0.6 {6.1}	○
C-PVC	0℃～90℃	1.0 {10.2}	0.6 {6.1}	○
PP	-20℃～90℃	1.0 {10.2}	0.6 {6.1}	○
PVDF	-40℃～120℃	1.0 {10.2}	0.6 {6.1}	○

NOTE The maximum working pressure is the value including the water hammer pressure. Be careful that the maximum working pressure is not exceeded during use.

* Concerning the allowable pressure for each temperature and material, see the technical documents at the end of this catalog.

* The diaphragm may become loose due to temperature changes during long storage, operation stop or while in use. Check the conditions and then retighten the bolts and nuts between the bonnet and the body to the "bonnet tightening torque". (Failure to do so may cause fluid leakage.)

PRODUCT MODEL CODE LIST

AUTOMATIC

ACTUATION	TYPE	ACTUATOR TYPE	ACTION POWER SOURCE	BODY MATERIAL	SEAL MATERIAL	CONNECTION	STANDARD	SIZE
A	14	P	*	*	*	F	*	* * *
A AUTOMATIC VALVE	14 TYPE 14	PNEUMATIC P TYPE AP	PNEUMATIC F DOUBLE ACTING; G AIR TO OPEN (0.6MPa); H AIR TO OPEN (1.0MPa); S AIR TO CLOSE	U U-PVC; C C-PVC; P PP; F PVDF	E EPDM; T PTFE; V FKM; F VIFLON®F(FKM-F); C VIFLON®C(FKM-C)	F FLANGED	1 JIS10K; D DIN; A ANSI (GRINNEL STANDARD); J ANSI (AV STANDARD)	065 65mm ～ 100 100mm

AUTOMATIC | PNEUMATIC | TYPE AP | DOUBLE ACTING | AIR TO OPEN | AIR TO CLOSE

DIAPHRAGM VALVE TYPE14

TYPE——A14P

CONNECTION / FLANGED——JIS, DIN, ANSI

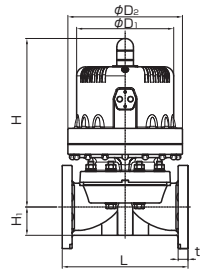

AIR SUPPLY (DOUBLE ACTING)

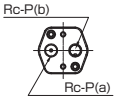

VALVE OPEN: (a)EXHAUST (b)SUPPLY
VALVE CLOSE:(a)SUPPLY (b)EXHAUST

AIR SUPPLY (AIR TO OPEN)



VALVE OPEN: (b)SUPPLY
VALVE CLOSE:(b)EXHAUST

AIR SUPPLY (AIR TO CLOSE)



VALVE OPEN: (a)SUPPLY
VALVE CLOSE:(a)EXHAUST

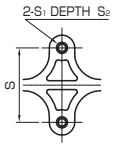

ACTUATOR SELECTION CHART

SIZE	ACTUATOR DOUBLE ACTING	AIR TO OPEN 0.6MPa	AIR TO OPEN 1.0MPa	AIR TO CLOSE
65mm (2 1/2inch)	AP-1DA	AP-1A0-06	AP-1A0-10	AP-1AS
	AP-2DA	AP-2A0-06	–	AP-2AS
80mm (3inch)	–	–	AP-2A0-10	–
	AP-3DA	AP-3A0-06	–	–
100mm (4inch)	–	–	AP-3A0-10	AP-3AS

For detailed specifications, see P.122

■ JIS、DIN (Unit:mm)

mm	D1 DOUBLE ACTING AIR TO OPEN 0.6MPa AIR TO CLOSE	D1 AIR TO OPEN 1.0MPa	D2 DOUBLE ACTING AIR TO OPEN 0.6MPa AIR TO CLOSE	D2 AIR TO OPEN 1.0MPa	H DOUBLE ACTING AIR TO OPEN 0.6MPa AIR TO CLOSE	H AIR TO OPEN 1.0MPa	H1	S	S1	S2	P	JIS10K L	JIS10K t PVC C-PVC	JIS10K t PP PVDF	DIN PN10 L	DIN PN10 t PVC C-PVC	DIN PN10 t PP PVDF
65	216	216	255	255	353	353	61	85	M8	15	1/4	250	22	23	290	22	22
80	216	232	255	271	376	389	63	100	M12	22	1/4	280	22	23	310	24	24
100	232	276	271	315	428	451	78	120	M12	22	1/4	340	22	24	350	24	26

■ ANSI (Unit:inch)

inch	mm	D1 DOUBLE ACTING AIR TO OPEN 0.6MPa AIR TO CLOSE	D1 AIR TO OPEN 1.0MPa	D2 AIR TO OPEN 0.6MPa AIR TO CLOSE	D2 AIR TO OPEN 1.0MPa	H AIR TO OPEN 0.6MPa AIR TO CLOSE	H AIR TO OPEN 1.0MPa	H1	S	S1	S2	P	ANSI CLASS150 L GRINNEL STANDARD	ANSI CLASS150 L AV STANDARD	ANSI CLASS150 t PVC C-PVC	ANSI CLASS150 t PP PVDF
2 1/2	65	8.50	8.50	10.04	10.04	13.90	13.90	2.40	3.35	M8	0.59	1/4	-	9.84	0.87	0.91
3	80	8.50	9.13	10.04	10.67	14.80	15.31	2.48	3.94	M12	0.87	1/4	10.37	11.02	0.87	0.91
4	100	9.13	10.87	10.67	12.40	16.85	17.76	3.07	4.72	M12	0.87	1/4	12.93	13.39	0.87	0.94

AUTOMATIC ELECTRIC TYPE H Single-Phase 100V • Single-Phase 200V

DIAPHRAGM VALVE TYPE 14

TYPE——A14H
CONNECTION / FLANGED——JIS, DIN, ANSI

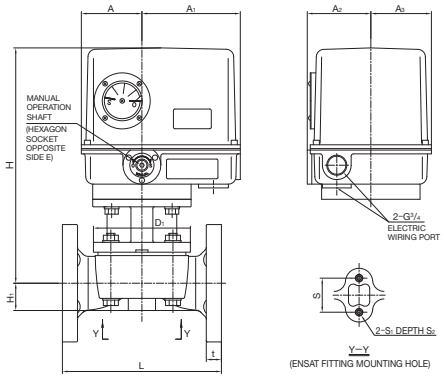

ACTUATOR SELECTION CHART

SIZE	ACTUATOR TYPE
15mm (1/2inch)	ED-11H
20mm (3/4inch)	
25mm (1inch)	
32mm (1 1/4inch)	
40mm (1 1/2inch)	
50mm (2inch)	

For detailed specifications, see P.126

■ JIS, DIN (Unit: mm)

mm	D1	H	H1	A	A1	A2	A3	S	S1	S2	E	JIS10K L	JIS10K t	DIN PN10 L	DIN PN10 t
15	54×66	284	19.5	80	130	84	80	25	M5	10	5	110	12	130	12
20	54×66	286	17.5	80	130	84	80	25	M5	10	5	120	13	150	13
25	67×80	291	18.5	80	130	84	80	25	M5	10	5	130	13	160	13
32	67×80	294.5	22.5	80	130	84	80	25	M5	10	5	142	16	180	16
40	110×110	302.2	27.5	80	130	84	80	45	M6	14	5	180	16	200	20
50	128×128	311.2	36	80	130	84	80	45	M6	14	5	210	20	230	22

■ ANSI (Unit: inch)

inch	mm	D1	H	H1	A	A1	A2	A3	S	S1	S2	E	ANSI CLASS150 L GRINNELL STANDARD	ANSI CLASS150 L AV STANDARD	ANSI CLASS150 t
1/2	15	2.13×2.60	11.18	0.77	3.15	5.12	3.31	3.15	0.98	M5	0.39	0.20	4.25	4.33	0.43
3/4	20	2.13×2.60	11.26	0.69	3.15	5.12	3.31	3.15	0.98	M5	0.39	0.20	5.88	4.72	0.51
1	25	2.64×3.15	11.46	0.73	3.15	5.12	3.31	3.15	0.98	M5	0.39	0.20	5.88	5.12	0.59
1 1/4	32	2.64×3.15	11.59	0.89	3.15	5.12	3.31	3.15	0.98	M5	0.39	0.20	6.38	-	0.63
1 1/2	40	4.25×4.25	11.90	1.08	3.15	5.12	3.31	3.15	1.77	M5	0.55	0.20	6.94	7.09	0.63
2	50	4.84×4.84	12.25	1.42	3.15	5.12	3.31	3.15	1.77	M5	0.55	0.20	7.94	8.27	0.79

AUTOMATIC ELECTRIC TYPE H Single-Phase 100V • Single-Phase 200V

DIAPHRAGM VALVE TYPE 14

TYPE——A14H
CONNECTION / FLANGED——JIS, DIN, ANSI

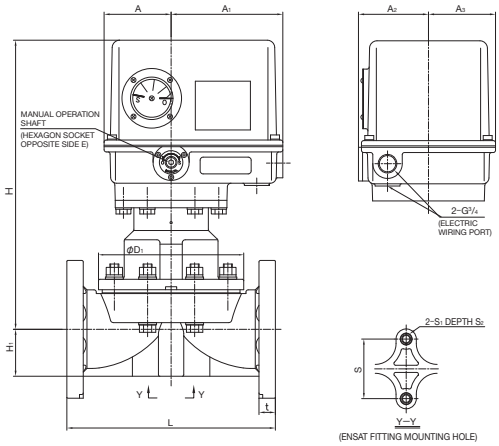

ACTUATOR SELECTION CHART

SIZE	ACTUATOR TYPE
65mm (2 1/2inch)	ED-21H
80mm (3inch)	
100mm (4inch)	

For detailed specifications, see P.126

■ JIS, DIN (Unit: mm)

mm	D1	H	H1	A	A1	A2	A3	S	S1	S2	E	JIS10K L	JIS10K t U-PVC C-PVC	JIS10K t PP PVDF	DIN PN10 L	DIN PN10 t U-PVC C-PVC	DIN PN10 t PP PVDF
65	175	371	61	90	150	94	90	85	M8	15	5	250	22	23	290	22	22
80	199	388	63	90	150	94	90	100	M12	22	5	280	22	23	310	24	24
100	239	418	78	90	150	94	90	120	M12	22	5	340	22	24	350	24	26

■ ANSI (Unit: inch)

inch	mm	D1	H	H1	A	A1	A2	A3	S	S1	S2	E	ANSI CLASS150 L GRINNELL STANDARD	ANSI CLASS150 L AV STANDARD	ANSI CLASS150 t U-PVC C-PVC	ANSI CLASS150 t PP PVDF
2 1/2	65	6.89	14.61	2.40	3.54	5.91	3.70	3.54	3.35	M8	0.59	0.20	-	9.84	0.87	0.91
3	80	7.83	15.28	2.48	3.54	5.91	3.70	3.54	3.94	M12	0.87	0.20	10.37	11.02	0.87	0.91
4	100	9.41	16.46	3.07	3.54	5.91	3.70	3.54	4.72	M12	0.87	0.20	12.93	13.39	0.87	0.94

AUTOMATIC ELECTRIC TYPE M Single-Phase 100V • Single-Phase 200V

DIAPHRAGM VALVE TYPE 14

TYPE——A14M

CONNECTION / FLANGED——JIS, DIN, ANSI

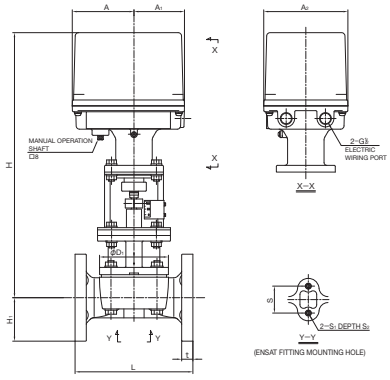

ACTUATOR SELECTION CHART

SIZE	ACTUATOR TYPE
15mm (1/2inch)	PSN1
20mm (3/4inch)	
25mm (1inch)	
32mm (1 1/4inch)	
40mm (1 1/2inch)	PSN3
50mm (2inch)	

For detailed specifications, see P.127

■ JIS, DIN (Unit: mm)

mm	D1	H	H1	A	A1	A2	S	S1	S2	JIS10K L	JIS10K t	DIN PN10 L	DIN PN10 t
15	54×66	406	19.5	101	81	140	25	M5	10	110	12	130	12
20	54×66	408	17.5	101	81	140	25	M5	10	120	13	150	13
25	67×80	413	18.5	101	81	140	25	M5	10	130	13	160	13
32	67×80	416	22.5	101	81	140	25	M5	10	142	16	180	16
40	110×110	464	27.5	110	90	150	45	M6	14	180	16	200	20
50	123×123	473	36	110	90	150	45	M6	14	210	20	230	22

■ ANSI (Unit: inch)

inch	mm	D1	H	H1	A	A1	A2	S	S1	S2	ANSI CLASS150 L GRINNELL STANDARD	ANSI CLASS150 L AV STANDARD	ANSI CLASS150 t U-PVC C-PVC	ANSI CLASS150 t PP PVDF
1/2	15	2.13×2.60	15.98	0.77	3.98	3.19	5.51	0.98	M5	0.39	4.25	4.33	0.43	0.43
3/4	20	2.13×2.60	16.06	0.69	3.98	3.19	5.51	0.98	M5	0.39	5.88	4.72	0.51	0.51
1	25	2.64×3.15	16.26	0.73	3.98	3.19	5.51	0.98	M5	0.39	5.88	5.12	0.59	0.59
1 1/4	32	2.64×3.15	16.38	0.89	3.98	3.19	5.51	0.98	M5	0.39	6.38	-	0.63	0.63
1 1/2	40	4.25×4.25	18.27	1.08	4.33	3.54	5.91	1.77	M6	0.55	6.94	7.09	0.63	0.63
2	50	4.84×4.84	18.62	1.42	4.33	3.54	5.91	1.77	M6	0.55	7.94	8.27	0.79	0.79

AUTOMATIC ELECTRIC TYPE M Single-Phase 100V • Single-Phase 200V

DIAPHRAGM VALVE TYPE 14

TYPE——A14M

CONNECTION / FLANGED——JIS, DIN, ANSI

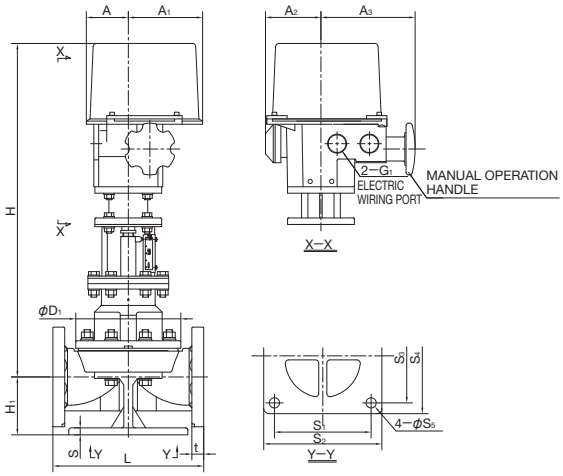

ACTUATOR SELECTION CHART

SIZE	ACTUATOR TYPE
65mm (2 1/2inch)	CSP471
80mm (3inch)	CSP771
100mm (4inch)	

For detailed specifications, see P.127

■ JIS, DIN (Unit: mm)

mm	D1	H	H1	A	A1	A2	A3	S	S1	S2	S3	S4	S5	JIS10K L	JIS10K t U-PVC C-PVC	JIS10K t PP PVDF	DIN PN10 L	DIN PN10 t U-PVC C-PVC	DIN PN10 t PP PVDF
65	175	608	98	79	137	103	177	12	155	190	160	190	19	250	22	23	290	22	22
80	199	625	109	79	137	103	177	12	180	220	175	215	19	280	22	23	310	24	24
100	239	655	119	79	137	103	177	15	230	270	220	260	19	340	22	24	350	24	26

■ ANSI (Unit: inch)

inch	mm	D1	H	H1	A	A1	A2	A3	S	S1	S2	S3	S4	S5	ANSI CLASS150 L GRINNELL STANDARD	ANSI CLASS150 L AV STANDARD	ANSI CLASS150 t U-PVC C-PVC	ANSI CLASS150 t PP PVDF
2 1/2	65	6.89	23.94	3.86	3.11	5.39	4.06	6.97	0.47	6.10	7.48	6.30	7.48	0.75	-	9.84	0.87	0.91
3	80	7.83	24.61	4.29	3.11	5.39	4.06	6.97	0.47	7.09	8.66	6.89	8.46	0.75	10.37	11.02	0.87	0.91
4	100	9.41	25.79	4.69	3.11	5.39	4.06	6.97	0.59	9.06	10.63	8.66	10.24	0.75	12.93	13.39	0.87	0.94

TRUE UNION DIAPHRAGM VALVE TYPE 14

- NEAR-LINEAR FLOW CHARACTERISTICS
- NEWLY EQUIPPED WITH BOTTOM STAND WITH INSERT HOLE TO ENSURE EASY AND SECURE INSTALLATION.
- THE VALVE BODY CAN BE REMOVED FROM THE LINE.

BASIC SPECIFICATIONS

VALVE TYPE——TRUE UNION DIAPHRAGM VALVE TYPE 14

SIZE——15 mm—50 mm (1/2 inch—2 inch)

BODY MATERIAL——U-PVC / C-PVC / PP / PVDF

SEAL MATERIAL / DIAPHRAGM——EPDM / PTFE

O-RING——EPDM / FKM

CONNECTION / SOCKET——JIS, DIN, ANSI, BS
* For BS, contact us.

THREADED——Rc, Rp, NPT

HIGH PURITY SERIES——LUBRICANT FREE

	FLUID TEMPERATURE	MAXIMUM WORKING PRESSURE (NORMAL TEMPERATURE) MPa{kgf/cm²}	CONNECTION METHOD	
			SOCKET	THREADED
U-PVC	0℃～ 50℃	1.0 {10.2}	○	○
C-PVC	0℃～ 90℃	1.0 {10.2}	○	○
PP	-20℃～ 80℃	1.0 {10.2}	○	○
PVDF	-20℃～100℃	1.0 {10.2}	○	○

NOTE The maximum working pressure is the value including the water hammer pressure. Be careful that the maximum working pressure is not exceeded during use.
* Concerning the allowable pressure for each temperature, material and actuator type, see the technical documents at the end of this catalog.
* The diaphragm may become loose due to temperature changes during long storage, operation stop or while in use. Check the conditions and then retighten the bolts and nuts between the bonnet and the body to the "bonnet tightening torque". (Failure to do so may cause fluid leakage.)

MANUAL



AUTOMATIC

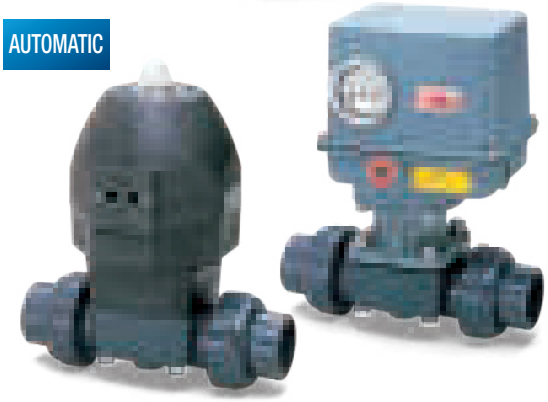

PARTS LIST MANUAL

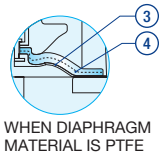

● WHEN DIAPHRAGM MATERIAL IS PTFE

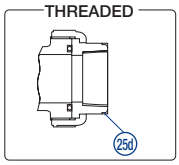

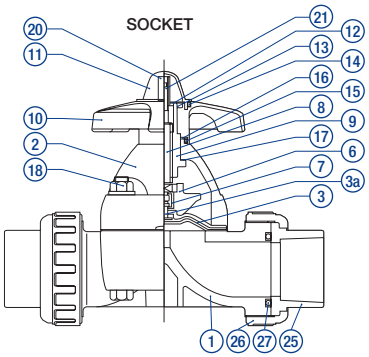

PART NO. / NAME	QTY	MATERIAL
①BODY	1	BODY END CONNECTOR —BONNET UNION NUT U-PVC————U-PVC C-PVC————PP PP————PP PVDF————PPG(1) PVDF————PVDF
②BONNET	1	
㉕END CONNECTOR	2	
㉖UNION NUT	2	
③DIAPHRAGM	1	EPDM, PTFE, etc.
③aEMBEDDED DIAPHRAGM FITTING	1	SUS304

PART NO. / NAME	QTY	MATERIAL
④CUSHION(2)	1	EPDM
⑥COMPRESSOR	1	PVDF
⑦JOINT FITTING	1	SUS304
⑧STEM	1	C3604
⑨SLEEVE	1	C3604
⑩HANDLE	1	PP
⑪GAUGE COVER	1	PC
⑫NAMEPLATE	1	U-PVC
⑬C-SHAPED STOP RING	1	SUS304

PART NO. / NAME	QTY	MATERIAL
⑭O-RING (A)	1	EPDM
⑮O-RING (B)	1	EPDM
⑯THRUST RING (A)	1	UHMWPE
⑰THRUST RING (B)	1	UHMWPE
⑱BOLT/NUT (A)	4	SUS304
⑳STOPPER	1	C3604
㉑SCREW	1	SUS304
㉕aRING(3)	2	SUS304
㉗O-RING (C)	2	EPDM, etc.

NOTE (1) Bonnet PPG 15 – 100 mm: black. 125 – 250 mm: ivory. (2) is used when the diaphragm material is PTFE.
(3) is used when the threaded end connector is made of C-PVC and the size is 15 to 25 mm.

COMPATIBLE ACTUATOR AUTOMATIC

PNEUMATIC TYPE AN — For detailed specifications, see P.117

ELECTRIC TYPE H — For detailed specifications, see P.126

ELECTRIC TYPE M — For detailed specifications, see P.127

PRODUCT MODEL CODE LIST — MANUAL

ACTUATION	TYPE	OPERATING SYSTEM	BODY MATERIAL	SEAL MATERIAL	CONNECTION	STANDARD	SIZE	HIGH PURITY SERIES
V	T1	MH	*	*	*	*	***	1
V MANUAL VALVE	T1 TRUE UNION	MH ROUND HANDLE	U U-PVC C C-PVC P PP F PVDF G PVDF+PPG	E EPDM 1 PTFE+EPDM 2 PTFE+FKM	S SOCKET N THREADED P SPIGOT	J JIS D DIN A ANSI	015 15mm ~ 050 50mm	1 LUBRICANT FREE

PRODUCT MODEL CODE LIST — AUTOMATIC

ACTUATION	TYPE	ACTUATOR TYPE	ACTION / POWER SOURCE	BODY MATERIAL	SEAL MATERIAL	CONNECTION	STANDARD	SIZE	HIGH PURITY SERIES
A	T1	*	*	*	*	*	*	***	1
A AUTOMATIC VALVE	T1 TRUE UNION	PNEUMATIC N TYPE AN ELECTRIC H TYPE H M TYPE M	PNEUMATIC F DOUBLE ACTING G AIR TO OPEN S AIR TO CLOSE ELECTRIC 1 Single-Phase 100V 2 Single-Phase 200V D DC24V	U U-PVC C C-PVC P PP F PVDF	E EPDM 1 PTFE+EPDM 2 PTFE+FKM	S SOCKET N THREADED P SPIGOT	J JIS D DIN A ANSI	015 15mm ~ 050 50mm	1 LUBRICANT FREE

NOTE (1) PP and PVDF sockets are weld type. Note, however, that JIS PP 32-mm socket type is not produced. (2) U-PVC and C-PVC sockets are of JIS type only. PVDF sockets are of DIN type only.

MANUAL

TRUE UNION DIAPHRAGM VALVE TYPE 14

TYPE——VT1MH

CONNECTION / SOCKET——JIS, DIN, ANSI THREADED——Rc, Rp, NPT

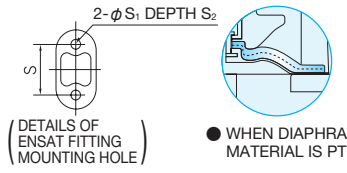

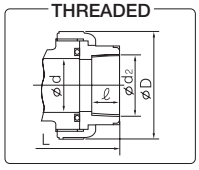

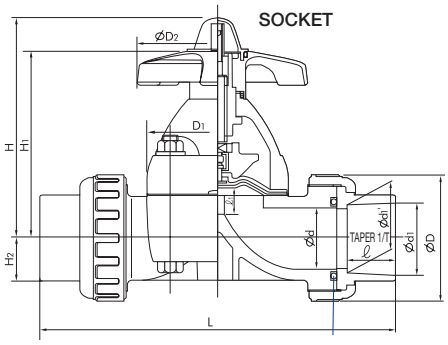

■ JIS, DIN (Unit: mm)

mm	d	D	D1	D2	ℓ1	H	H1	H2	S	S1	S2	JIS SOCKET d1	ℓ	1/T	L	d1	d1'	ℓ	L	JIS THREADED d2	ℓ	L U-PVC C-PVC	L PP PVDF
												U-PVC C-PVC				PP							
15	16	48	54×66	100	10	104	86	19.5	25	7	13	22.11	20	1/34	134	21.2	20.2	20	134	Rc1/2	15	128	128
20	20	60	54×66	100	10	106	88	17.5	25	7	13	26.13	24	1/34	156	26.2	25.2	23	154	Rc3/4	17	148	148
25	25	70	67×80	100	12	111	93	18.5	25	7	13	32.16	27	1/34	186	33.0	32.0	25	182	Rc1	20	172	172
32	32	82	67×80	100	12	116	97	22.5	25	7	13	38.19	30	1/34	200	-	-	-	-	Rc11/4	22	188	188
40	40	100	108×108	156	21	177	144	27.5	45	9	15	48.21	37	1/37	271	47.0	46.0	28	253	Rc11/2	25	245	245
50	52	106	123×123	156	25	191	158	36	45	9	15	60.25	42	1/37	303	59.0	58.0	28	275	Rc2	28	281	278

mm	DIN SOCKET d1	ℓ	L U-PVC C-PVC	L PP PVDF d1'	ℓ	L	THREADED d1	ℓ	L U-PVC C-PVC	L PP PVDF	SPIGOT d1	ℓ	L U-PVC, C-PVC	ℓ	L PP, PVDF	t PP	t PVDF
15	20	16	128	19.5	19.3	14.5	125	Rc1/2	15	128	128	20	18.5	150	20	18.5	150	2.5	1.9
20	25	19	147	24.5	24.3	16	141	Rc3/4	17	148	148	25	24	172	25	22	172	2.7	1.9
25	32	22	172	31.5	31.3	18	164	Rc1	20	172	172	32	24.5	195	32	22.5	195	3.0	2.4
32	40	26	188	39.45	39.2	20.5	177	Rc11/4	22	188	188	40	28	212	40	26	212	3.7	2.4
40	50	31	246	49.45	49.2	23.5	231	Rc11/2	25	245	245	50	34	276	50	32	276	4.6	3.0
50	63	38	294	62.5	62.1	27.5	274	Rc2	28	281	278	63	38.5	308	63	36.0	307	5.8	3.0

■ ANSI (Unit: inch)

inch	mm	d	D	D1	D2	C	H	H1	H2	S	S1	S2	ANSI SOCKET ASTM SCH80 d1	d2	ℓ	L	d1	ℓ	L	THREADED ANSI/ASME B1 20 1 d1	L ℓ	L U-PVC C-PVC	L PP PVDF
													U-PVC C-PVC				PP PVDF						
1/2	15	0.63	1.89	2.13×2.60	3.94	0.39	4.09	3.39	0.77	0.98	0.28	0.51	0.848	0.836	0.875	5.47	0.83	0.87	5.43	1/2-14NPT	0.59	5.04	5.04
3/4	20	0.79	2.36	2.13×2.60	3.94	0.39	4.17	3.46	0.69	0.98	0.28	0.51	1.058	1.046	1.000	6.18	1.03	1.00	6.09	3/4-14NPT	0.67	5.83	5.83
1	25	0.98	2.76	2.64×3.15	3.94	0.47	4.37	3.66	0.73	0.98	0.28	0.51	1.325	1.310	1.125	7.32	1.30	1.13	7.24	1-11 1/2NPT	0.79	6.77	6.77
1 1/4	32	1.26	3.23	2.64×3.15	3.94	0.47	4.57	3.82	0.89	0.98	0.28	0.51	1.670	1.655	1.250	7.95	1.65	1.25	7.80	1 1/4-11 1/2NPT	0.87	7.40	7.40
1 1/2	40	1.57	3.94	4.25×4.25	6.14	0.83	6.97	5.67	1.08	1.77	0.35	0.59	1.912	1.894	1.375	10.47	1.89	1.37	10.28	1 1/2-11 1/2NPT	0.98	9.65	9.65
2	50	2.05	4.17	4.84×4.84	6.14	0.98	7.52	6.22	1.42	1.77	0.35	0.59	2.387	2.369	1.500	11.54	2.36	1.50	11.54	2-11 1/2NPT	1.10	11.06	10.95

AUTOMATIC PNEUMATIC TYPE AN DOUBLE ACTING AIR TO OPEN AIR TO CLOSE

TRUE UNION DIAPHRAGM VALVE TYPE 14

TYPE——AT1N
CONNECTION / SOCKET, THREADED——JIS, DIN, ANSI

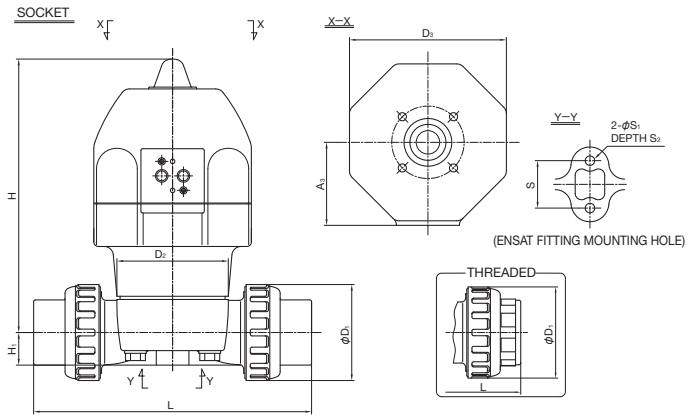

ACTUATOR SELECTION CHART

SIZE	ACTUATOR TYPE		
	DOUBLE ACTING	AIR TO OPEN	AIR TO CLOSE
15mm (1/2inch)	AN-1DA	AN-1AO	AN-1AS
20mm (3/4inch)			
25mm (1inch)	AN-2DA	AN-2AO	AN-2AS
32mm (1 1/4inch)			
40mm (1 1/2inch)	AN-3DA	AN-3AO	AN-3AS
50mm (2inch)	AN-4DA	AN-4AO	AN-4AS

For detailed specifications, see P.117

■ JIS, DIN (Unit: mm)

mm	D₁	D₂	D₃	H	H₁	A₃	S	S₁	S₂	P	JIS SOCKET L U-PVC C-PVC	JIS SOCKET L PP	JIS THREADED L U-PVC C-PVC	JIS THREADED L PP	DIN SOCKET L U-PVC C-PVC	DIN SOCKET L PP PVDF	DIN THREADED L U-PVC C-PVC	DIN THREADED L PP PVDF	DIN SPIGOT L U-PVC C-PVC	DIN SPIGOT L PP PVDF	DIN SPIGOT t PP	DIN SPIGOT t PVDF
15	48	54×66	130	186	19.5	68	25	7	13	1/4	134	134	128	128	128	125	128	128	150	150	2.5	1.9
20	60	54×66	130	188	17.5	68	25	7	13	1/4	156	154	148	148	147	141	148	148	172	172	2.7	1.9
25	70	67×80	130	193	18.5	68	25	7	13	1/4	186	182	172	172	172	164	172	172	195	195	3.0	2.4
32	82	67×80	130	197	22.5	68	25	7	13	1/4	200	-	188	188	188	177	188	188	212	212	3.7	2.4
40	100	108×108	174	293	27.5	92	45	9	15	1/4	271	253	245	245	246	231	245	245	276	276	4.6	3.0
50	106	123×123	174	302	36	92	45	9	15	1/4	303	275	281	278	294	274	281	278	308	307	5.8	3.0

■ ANSI (Unit: inch)

inch	mm	D₁	D₂	D₃	H	H₁	A₃	S	S₁	S₂	P	ANSI SOCKET L U-PVC C-PVC	ANSI SOCKET L PP PVDF	ANSI THREADED L U-PVC C-PVC	ANSI THREADED L PP PVDF
1/2	15	1.89	2.13×2.60	5.12	7.32	0.77	2.68	0.98	0.28	0.51	1/4	5.47	5.43	5.04	5.04
3/4	20	2.36	2.13×2.60	5.12	7.40	0.69	2.68	0.98	0.28	0.51	1/4	6.18	6.09	5.83	5.83
1	25	2.76	2.64×3.15	5.12	7.60	0.73	2.68	0.98	0.28	0.51	1/4	7.32	7.24	6.77	6.77
1 1/4	32	3.23	2.64×3.15	5.12	7.76	0.89	2.68	0.98	0.28	0.51	1/4	7.95	7.80	7.40	7.40
1 1/2	40	3.94	4.25×4.25	6.85	11.54	1.08	3.62	1.77	0.35	0.59	1/4	10.47	10.28	9.65	9.65
2	50	4.17	4.84×4.84	6.85	11.89	1.42	3.62	1.77	0.35	0.59	1/4	11.54	11.54	11.06	10.95

AUTOMATIC | ELECTRIC | TYPE H | Single-Phase 100V • Single-Phase 200V

TRUE UNION DIAPHRAGM VALVE TYPE 14

TYPE——AT1H

CONNECTION / SOCKET, THREADED——JIS, DIN, ANSI

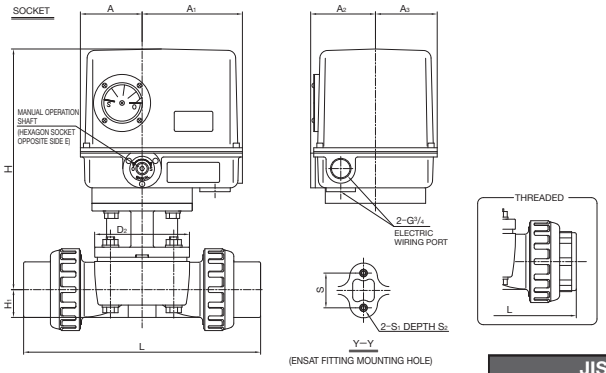

ACTUATOR SELECTION CHART

SIZE	ACTUATOR TYPE
15mm (1/2inch)	ED-11H
20mm (3/4inch)	
25mm (1inch)	
32mm (1 1/4inch)	
40mm (1 1/2inch)	
50mm (2inch)	

For detailed specifications, see P.126

■ JIS, DIN (Unit: mm)

mm	D2	H	H1	A	A1	A2	A3	S	S1	S2	E	JIS SOCKET L U-PVC C-PVC	JIS SOCKET L PP	JIS THREADED L U-PVC C-PVC	JIS THREADED L PP PVDF	DIN SOCKET L U-PVC C-PVC	DIN SOCKET L PP PVDF	DIN THREADED L U-PVC C-PVC	DIN THREADED L PP PVDF	DIN SPIGOT L U-PVC C-PVC	DIN SPIGOT L PP PVDF	DIN SPIGOT t PP	DIN SPIGOT t PVDF
15	54×66	284	19.5	80	130	84	80	25	M5	10	5	134	134	128	128	128	125	128	128	150	2.5	1.9	150
20	54×66	286	17.5	80	130	84	80	25	M5	10	5	156	154	148	148	147	141	148	148	172	2.7	1.9	172
25	67×80	291	18.5	80	130	84	80	25	M5	10	5	186	182	172	172	172	164	172	172	195	3.0	2.4	195
32	67×80	294.5	22.5	80	130	84	80	25	M5	10	5	200	-	188	188	188	177	188	188	212	3.7	2.4	212
40	110×110	302.2	27.5	80	130	84	80	45	M6	14	5	271	253	245	245	246	231	245	245	276	4.6	3.0	276
50	123×123	311.2	36	80	130	84	80	45	M6	14	5	303	275	281	278	294	274	281	278	308	5.8	3.0	307

■ ANSI (Unit: inch)

inch	mm	D2	H	H1	A	A1	A2	A3	S	S1	S2	E	ANSI SOCKET L U-PVC C-PVC	ANSI SOCKET L PP PVDF	ANSI THREADED L U-PVC C-PVC	ANSI THREADED L PP PVDF
1/2	15	2.13×2.60	11.59	0.80	3.27	5.31	3.43	3.27	1.02	M5	0.41	0.20	5.47	5.43	5.04	5.04
3/4	20	2.13×2.60	11.67	0.71	3.27	5.31	3.43	3.27	1.02	M5	0.41	0.20	6.18	6.09	5.83	5.83
1	25	2.64×3.15	11.88	0.76	3.27	5.31	3.43	3.27	1.02	M5	0.41	0.20	7.32	7.24	6.77	6.77
1 1/4	32	2.64×3.15	12.02	0.92	3.27	5.31	3.43	3.27	1.02	M5	0.41	0.20	7.95	7.80	7.40	7.40
1 1/2	40	4.25×4.25	12.33	1.12	3.27	5.31	3.43	3.27	1.84	M6	0.57	0.20	10.47	10.28	9.65	9.65
2	50	4.84×4.84	12.70	1.47	3.27	5.31	3.43	3.27	1.84	M6	0.57	0.20	11.54	11.54	11.06	10.95

AUTOMATIC | ELECTRIC | TYPE M | Single-Phase 100V • Single-Phase 200V

TRUE UNION DIAPHRAGM VALVE TYPE 14

TYPE——AT1M

CONNECTION / SOCKET, THREADED——JIS, DIN, ANSI

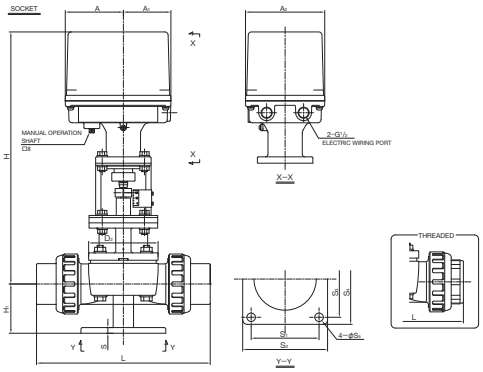

ACTUATOR SELECTION CHART

SIZE	ACTUATOR TYPE
15mm (1/2inch)	PSN1
20mm (3/4inch)	
25mm (1inch)	
32mm (1 1/4inch)	
40mm (1 1/2inch)	PSN3
50mm (2inch)	

For detailed specifications, see P.127

■ JIS, DIN (Unit: mm)

mm	D2	H	H1	A	A1	A2	S	S1	S2	S3	S4	S5	JIS SOCKET L U-PVC C-PVC	JIS SOCKET L PP	JIS THREADED L U-PVC C-PVC	JIS THREADED L PP PVDF
15	54×66	406	57	101	81	140	8	50	70	60	80	12	134	134	128	128
20	54×66	408	62	101	81	140	8	60	80	65	85	12	156	154	148	148
25	67×80	413	75	101	81	140	8	65	90	70	95	15	186	182	172	172
32	67×80	416	79	101	81	140	10	90	115	110	135	15	200	-	188	188
40	110×110	464	79	110	90	150	10	90	115	110	135	15	271	253	245	245
50	123×123	473	87	110	90	150	10	120	150	135	160	15	303	275	281	278

■ ANSI (Unit: inch)

inch	mm	D2	H	H1	A	A1	A2	S	S1	S2	S3	S4	S5	ANSI SOCKET L U-PVC C-PVC	ANSI SOCKET L PP PVDF	ANSI THREADED L U-PVC C-PVC	ANSI THREADED L PP PVDF
1/2	15	2.13×2.60	15.98	2.24	3.98	3.19	5.51	0.31	1.97	2.76	2.36	3.15	0.47	5.47	5.43	5.04	5.04
3/4	20	2.13×2.60	16.06	2.44	3.98	3.19	5.51	0.31	2.36	3.15	2.56	3.35	0.47	6.18	6.09	5.83	5.83
1	25	2.64×3.15	16.26	2.95	3.98	3.19	5.51	0.31	2.56	3.54	2.76	3.74	0.59	7.32	7.24	6.77	6.77
1 1/4	32	2.64×3.15	16.38	3.11	3.98	3.19	5.51	0.39	3.54	4.53	4.33	5.31	0.59	7.95	7.80	7.40	7.40
1 1/2	40	4.25×4.25	18.27	3.11	4.33	3.54	5.91	0.39	3.54	4.53	4.33	5.31	0.59	10.47	10.28	9.65	9.65
2	50	4.84×4.84	18.62	3.43	4.33	3.54	5.91	0.39	4.72	5.91	5.31	6.30	0.59	11.54	11.54	11.06	10.95

DIAPHRAGM VALVE TYPE 15

- NEAR-LINEAR FLOW CHARACTERISTICS
- REQUIRES LESS HANDLE OPERATION FORCE THANKS TO IMPROVED MATERIAL AND SHAPE.
- THE GAUGE COVER ALSO SERVES AS AN INDICATOR, ALLOWING EASY CHECK OF OPENING DEGREE.

BASIC SPECIFICATIONS

VALVE TYPE——**DIAPHRAGM VALVE TYPE 15**
SIZE——**125 mm, 150 mm (5 inch, 6 inch)**
BODY MATERIAL——**U-PVC** **PP** **PVDF**
SEAL MATERIAL / DIAPHRAGM——**EPDM** **PTFE** **FKM** **etc.**
CONNECTION / FLANGED——**JIS10K, DIN PN10, ANSI CLASS150**
HIGH PURITY SERIES——**LUBRICANT FREE**

	FLUID TEMPERATURE	MAXIMUM WORKING PRESSURE (NORMAL TEMPERATURE) MPa{kgf/cm²} DIAPHRAGM: RUBBER 125mm	DIAPHRAGM: RUBBER 150mm	DIAPHRAGM: PTFE 125mm	DIAPHRAGM: PTFE 150mm	CONNECTION METHOD FLANGED
U-PVC	0℃～ 60℃	0.8 {8.2}	0.8 {8.2}	0.7 {7.1}	0.5 {5.1}	○
PP	-20℃～ 90℃	0.8 {8.2}	0.8 {8.2}	0.7 {7.1}	0.5 {5.1}	○
PVDF	-40℃～120℃	0.8 {8.2}	0.8 {8.2}	0.7 {7.1}	0.5 {5.1}	○

NOTE The maximum working pressure is the value including the water hammer pressure. Be careful that the maximum working pressure is not exceeded during use.
* Concerning the allowable pressure for each temperature, material and actuator type, see the technical documents at the end of this catalog.
* The diaphragm may become loose due to temperature changes during long storage, operation stop or while in use. Check the conditions and then retighten the bolts and nuts between the bonnet and the body to the "bonnet tightening torque". (Failure to do so may cause fluid leakage.)

MANUAL



AUTOMATIC

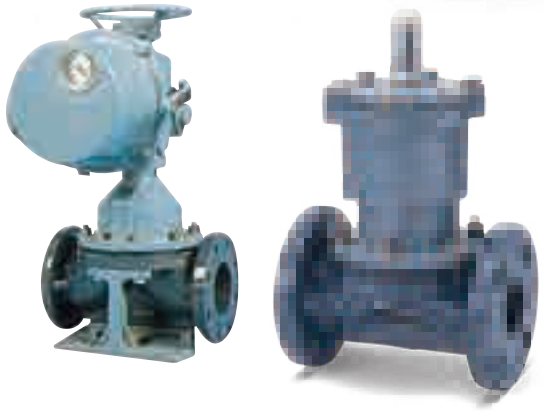

PARTS LIST MANUAL

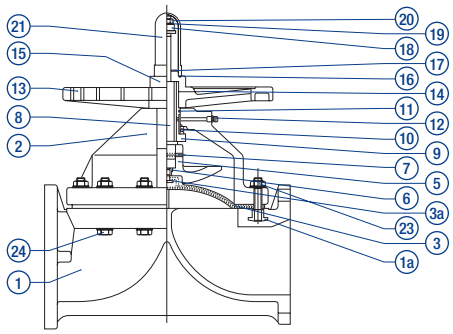

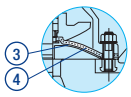

WHEN DIAPHRAGM MATERIAL IS PTFE

PART NO. / NAME	QTY	MATERIAL
①BODY	1	BODY——BONNET U-PVC——U-PVC PP——PP
②BONNET	1	PVDF——PPG(1) PVDF——PVDF
③DIAPHRAGM	1	EPDM, PTFE, etc.
3a EMBEDDED DIAPHRAGM FITTING	1	SUS304
④CUSHION(2)	1	EPDM, etc.
⑤COMPRESSOR	1	PVDF
⑥COMPRESSOR NUT	1	C3604

PART NO. / NAME	QTY	MATERIAL
⑦COMPRESSOR PIN	1	SUS304
⑧STEM	1	C3604
⑨SLEEVE (A)	1	C3604
⑩THRUST BEARING (A)	1	SUJ2
⑪O-RING (A)	1	NBR
⑫GREASE NIPPLE	1	C3604
⑬HANDLE	1	PP
⑭NAMEPLATE	1	U-PVC
⑮CAP	1	PP
⑯GASKET (A)	1	EPDM

PART NO. / NAME	QTY	MATERIAL
⑰VALVE SEAT	1	SUS304
⑱STOPPER	1	SS400 (Unichrome plating)
⑲SPRING WASHER	1	SUS304
⑳SET NUT	1	SUS304
㉑GAUGE COVER	1	PC
㉓BOLT/NUT	4	SUS304
㉔BOLT/NUT	–	SUS304
1a STUD NUT	4	C3604(3), SUS304(4)

NOTE (1) Bonnet PPG 15 – 100 mm: black. 125 – 250 mm: ivory. (2) is used when the diaphragm material is PTFE. (3) is used when the body material is U-PVC or PP. (4) is used when the body material is PVDF.

HANDLE ROTATION [FULL OPEN (ROTATION/LIFT) FULL CLOSE] MANUAL

SIZE	ROTATION	SIZE	ROTATION
125mm (5inch)	10.0	150mm (6inch)	11.0

COMPATIBLE ACTUATOR AUTOMATIC

PNEUMATIC TYPE AV — For detailed specifications, see P.118

ELECTRIC TYPE H — For detailed specifications, see P.126

ELECTRIC TYPE S — For detailed specifications, see P.131

PRODUCT MODEL CODE LIST — MANUAL

ACTUATION	TYPE	OPERATING SYSTEM	BODY MATERIAL	SEAL MATERIAL	CONNECTION	STANDARD	SIZE	HIGH PURITY SERIES
V	15	MH	*	*	F	*	***	1
V MANUAL VALVE	15 TYPE 15	MH ROUND HANDLE	U U-PVC P PP F PVDF G PVDF+PPG	E EPDM T PTFE	F FLANGED	1 JIS10K 5 5K D DIN A ANSI	125 125mm • 150 150mm	1 LUBRICANT FREE

PRODUCT MODEL CODE LIST — AUTOMATIC

ACTUATION	TYPE	ACTUATOR TYPE	ACTION / POWER SOURCE	BODY MATERIAL	SEAL MATERIAL	CONNECTION	STANDARD	SIZE	HIGH PURITY SERIES
A	15	*	*	*	*	F	*	***	1
A AUTOMATIC VALVE	15 TYPE 15	PNEUMATIC V TYPE AV ELECTRIC H TYPE H S TYPE S	PNEUMATIC F DOUBLE ACTING G AIR TO OPEN S AIR TO CLOSE ELECTRIC 1 Single-Phase 100V 2 Single-Phase 200V 3 Three-Phase AC200V 4 Three-Phase AC400V	U U-PVC P PP F PVDF	E EPDM T PTFE	F FLANGED	1 JIS10K 5 JIS5K D DIN A ANSI	125 125mm • 150 150mm	1 LUBRICANT FREE

MANUAL

DIAPHRAGM VALVE TYPE 15

TYPE——V15MH

CONNECTION / FLANGED——JIS, DIN, ANSI

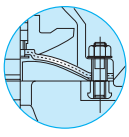

WHEN DIAPHRAGM MATERIAL IS PTFE

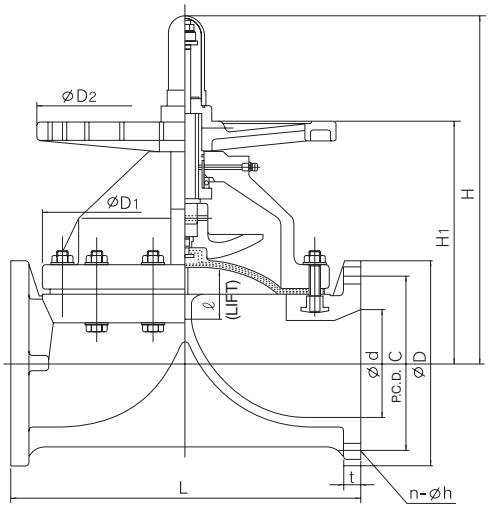

■ JIS, DIN (Unit: mm)

mm	d	D1	D2	ℓ	H	H1	JIS											DIN PN10						
							JIS5K				JIS10K				L	t		DIN PN10				L	t	
							D	C	n	h	D	C	n	h		U-PVC	PP PVDF	D	C	n	h		U-PVC	PP PVDF
125	125	320	300	60	420	308	235	200	8	19	250	210	8	23	410	22	24	250	210	8	18	400	22	23
150	148	385	410	70	476	334	265	230	8	19	280	240	8	23	480	24	27	285	240	8	22	480	24	27

■ ANSI (Unit: inch)

inch	mm	d	D1	D2	ℓ	H	H1	ANSI						
								ANSI CLASS150					t	
								D	C	n	h	L	U-PVC	PP PVDF
5	125	4.92	12.60	11.81	2.36	16.54	12.13	10.00	8.50	8	0.88	16.14	0.87	0.94
6	150	5.83	15.16	16.14	2.76	18.74	13.15	11.00	9.50	8	0.88	18.90	0.94	1.06

AUTOMATIC PNEUMATIC TYPE AV DOUBLE ACTING AIR TO OPEN AIR TO CLOSE

DIAPHRAGM VALVE TYPE 15

TYPE——A15V
CONNECTION / FLANGED——JIS, DIN, ANSI

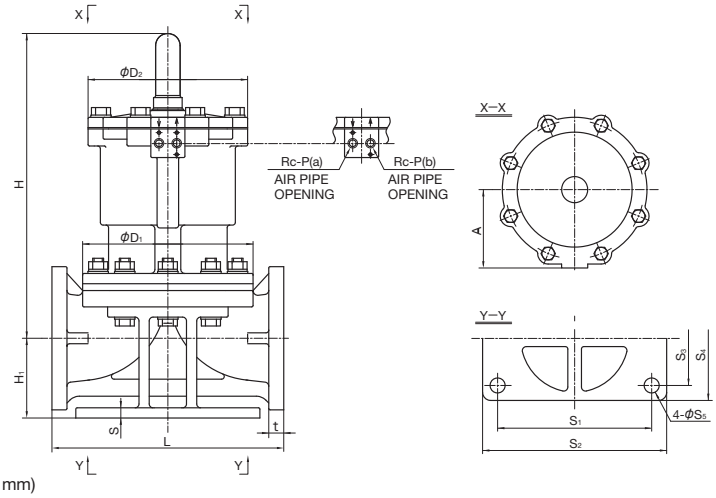

ACTUATOR SELECTION CHART

SIZE	ACTUATOR TYPE
125mm (5inch)	AV-4DA
150mm (6inch)	AV-5DA

For detailed specifications, see P.118

■ JIS, DIN (Unit: mm)

mm	D1	D2	A	H	H1	S	S1	S2	S3	S4	S5	P	JIS5K, JIS10K L	JIS5K, JIS10K t U-PVC	JIS5K, JIS10K t PP PVDF	DIN PN10 L	DIN PN10 t U-PVC	DIN PN10 t PP PVDF
125	320	305	150	508	134	15	310	350	280	320	23	1/4	410	22	24	400	22	23
150	385	385	195	566	145	16	360	400	310	350	23	1/4	480	24	27	480	24	27

■ ANSI (Unit: inch)

inch	mm	D1	D2	A	H	H1	S	S1	S2	S3	S4	S5	P	ANSI CLASS150 L	ANSI CLASS150 t U-PVC	ANSI CLASS150 t PP PVDF
5	125	12.60	12.01	5.91	20.00	5.28	0.59	12.20	13.78	11.02	12.60	0.91	1/4	16.14	0.87	0.94
6	150	15.16	15.16	7.68	22.28	5.71	0.63	14.17	15.75	12.20	13.78	0.91	1/4	18.90	0.94	1.06

AUTOMATIC PNEUMATIC TYPE AV DOUBLE ACTING AIR TO OPEN AIR TO CLOSE

DIAPHRAGM VALVE TYPE 15

TYPE——A15V
CONNECTION / FLANGED——JIS, DIN, ANSI

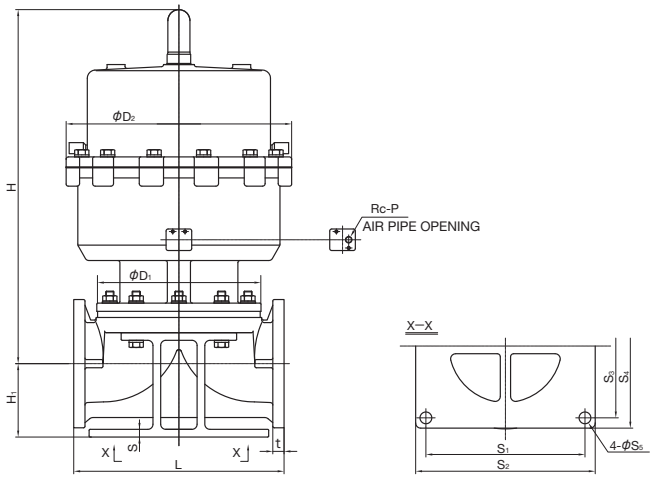

ACTUATOR SELECTION CHART

SIZE	ACTUATOR TYPE
125mm (5inch)	AV-4AO
150mm (6inch)	AV-5AO

For detailed specifications, see P.118

■ JIS, DIN (Unit: mm)

mm	D1	D2	H	H1	S	S1	S2	S3	S4	S5	P	JIS5K, JIS10K L	JIS5K, JIS10K t U-PVC	JIS5K, JIS10K t PP PVDF	DIN PN10 L	DIN PN10 t U-PVC	DIN PN10 t PP PVDF
125	320	455	690	143	15	310	350	280	320	23	1/4	410	22	24	400	22	23
150	385	520	790	148	16	360	400	310	350	23	1/4	480	24	27	480	24	27

■ ANSI (Unit: inch)

inch	mm	D1	D2	H	H1	H2	S1	S2	S3	S4	S5	P	ANSI CLASS150 L	ANSI CLASS150 t U-PVC	ANSI CLASS150 t PP PVDF
5	125	12.60	17.91	20.00	5.28	0.59	12.20	13.78	11.02	12.60	0.91	1/4	16.14	0.87	0.94
6	150	15.16	20.47	22.28	5.71	0.63	14.17	15.75	12.20	13.78	0.91	1/4	18.90	0.94	1.06

AUTOMATIC | PNEUMATIC | TYPE AV | DOUBLE ACTING | AIR TO OPEN | AIR TO CLOSE

DIAPHRAGM VALVE TYPE 15

TYPE——A15V

CONNECTION / FLANGED——JIS, DIN, ANSI

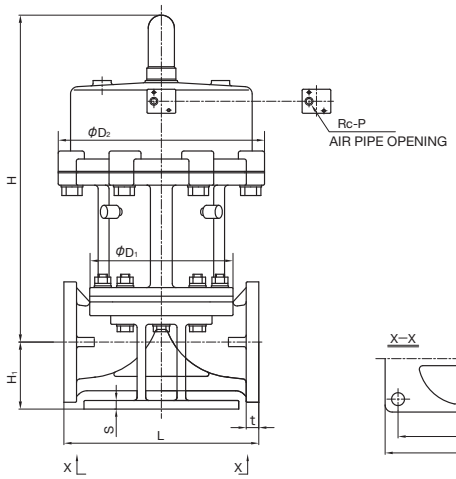

ACTUATOR SELECTION CHART

SIZE	ACTUATOR TYPE
125mm (5inch)	AV-4AS
150mm (6inch)	AV-5AS

For detailed specifications, see P.118

■ JIS, DIN (Unit: mm)

mm	D1	D2	H	H1	S	S1	S2	S3	S4	S5	P	JIS5K, JIS10K L	JIS5K, JIS10K t U-PVC	JIS5K, JIS10K t PP PVDF	DIN PN10 L	DIN PN10 t U-PVC	DIN PN10 t PP PVDF
125	320	455	653	143	15	310	350	280	320	23	1/4	410	22	24	400	22	23
150	385	520	722	148	16	360	400	310	350	23	1/4	480	24	27	480	24	27

■ ANSI (Unit: inch)

inch	mm	D1	D2	H	H1	S	S1	S2	S3	S4	S5	P	ANSI CLASS150 L	ANSI CLASS150 t U-PVC	ANSI CLASS150 t PP PVDF
5	125	12.60	17.91	25.71	5.63	0.59	12.20	13.78	11.02	12.60	0.91	1/4	16.14	0.87	0.94
6	150	15.16	20.47	28.43	5.83	0.63	14.17	15.75	12.20	13.78	0.91	1/4	18.90	0.94	1.06

AUTOMATIC ELECTRIC TYPE H Single-Phase 100V • Single-Phase 200V

DIAPHRAGM VALVE TYPE 15

TYPE——A15H
CONNECTION / FLANGED——JIS, DIN, ANSI

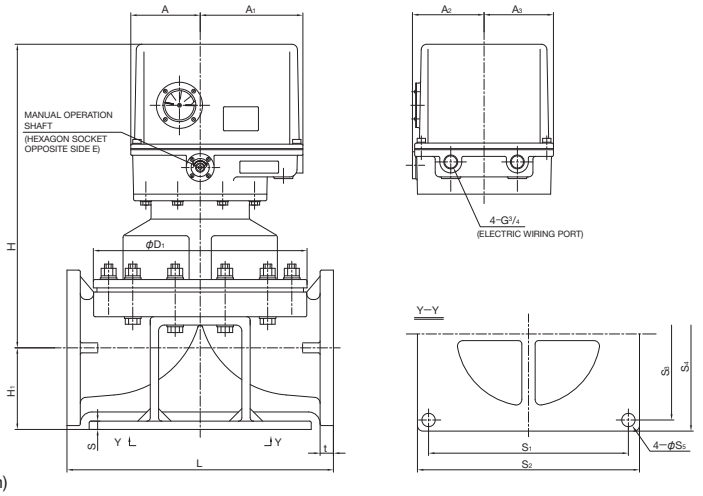

ACTUATOR SELECTION CHART

SIZE	ACTUATOR TYPE
125mm (5inch)	ED-30H
150mm (6inch)	

For detailed specifications, see P.126

■ JIS, DIN (Unit: mm)

mm	D1	H	H1	A	A1	A2	A3	S	S1	S2	S3	S4	S5	E	JIS5K, JIS10K L	JIS5K, JIS10K t U-PVC	JIS5K, JIS10K t PP PVDF	DIN PN10 L	DIN PN10 t U-PVC	DIN PN10 t PP PVDF
125	320	510	134	125	185	129	125	15	310	350	280	320	23	6	410	22	24	400	22	23
150	385	550	145	125	185	129	125	16	360	400	310	350	23	6	480	24	27	480	24	27

■ ANSI (Unit: inch)

inch	mm	D1	H	H1	A	A1	A2	A3	S	S1	S2	S3	S4	S5	E	ANSI CLASS150 L	ANSI CLASS150 t U-PVC	ANSI CLASS150 t PP PVDF
5	125	12.60	20.08	5.28	4.92	7.28	5.08	4.92	0.59	12.20	13.78	11.02	12.60	0.91	0.24	16.14	0.87	0.94
6	150	15.16	21.65	5.71	4.92	7.28	5.08	4.92	0.63	14.17	15.75	12.20	13.78	0.91	0.24	18.90	0.94	1.06

AUTOMATIC ELECTRIC TYPE S Three-Phase AC200V • Three-Phase AC400V

DIAPHRAGM VALVE TYPE 15

TYPE——A15S
CONNECTION / FLANGED——JIS, DIN, ANSI

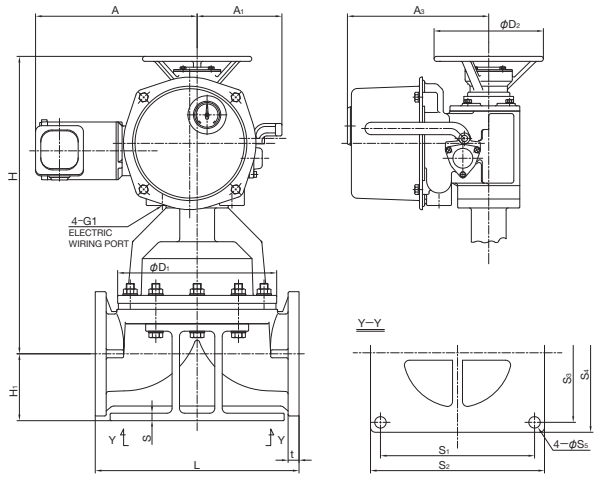

ACTUATOR SELECTION CHART

SIZE	ACTUATOR TYPE
125mm (5inch)	LTRM-01

For detailed specifications, see P.131

■ JIS, DIN (Unit: mm)

mm	D1	D2	H	H1	A	A1	A3	S	S1	S2	S3	S4	S5	JIS5K, JIS10K L	JIS5K, JIS10K t U-PVC	JIS5K, JIS10K t PP PVDF	DIN PN10 L	DIN PN10 t U-PVC	DIN PN10 t PP PVDF
125	320	220	590	134	325	171	284	15	310	350	280	320	23	410	22	24	400	22	23

■ ANSI (Unit: inch)

inch	mm	D1	D2	H	H1	A	A1	A3	S	S1	S2	S3	S4	S5	ANSI CLASS150 L	ANSI CLASS150 t U-PVC	ANSI CLASS150 t PP PVDF
5	125	12.60	8.66	23.23	5.28	12.80	6.73	11.18	0.59	12.20	13.78	11.02	12.60	0.91	16.14	0.87	0.94

AUTOMATIC ELECTRIC TYPE S Three-Phase AC200V • Three-Phase AC400V

DIAPHRAGM VALVE TYPE 15

TYPE——A15S

CONNECTION / FLANGED——JIS, DIN, ANSI

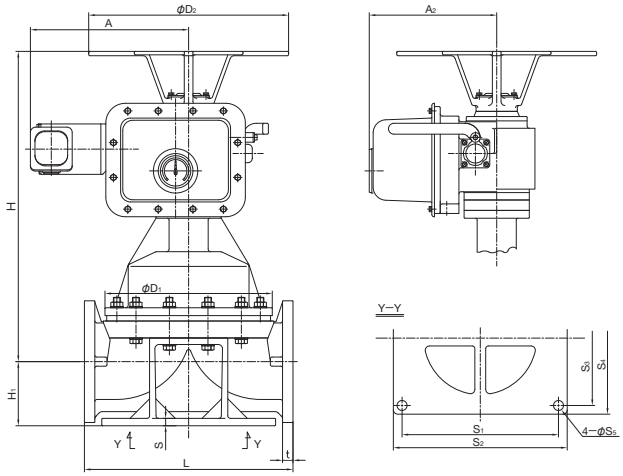

ACTUATOR SELECTION CHART

SIZE	ACTUATOR TYPE
150mm (6inch)	LTMD-01 (AUTOMATIC RETURN MECHANISM)
	LTKD-01 (MANUAL RETURN MECHANISM)

For detailed specifications, see P.131

■ JIS, DIN (Unit: mm)

mm	D1	D2	H	H1	A	A2	S	S1	S2	S3	S4	S5	JIS5K, JIS10K L	JIS5K, JIS10K t U-PVC	JIS5K, JIS10K t PP PVDF	DIN PN10 L	DIN PN10 t U-PVC	DIN PN10 t PP PVDF
150	385	460	714	145	357	293	16	360	400	310	350	23	480	24	27	480	24	27

■ ANSI (Unit: inch)

inch	mm	D1	D2	H	H1	A	A2	S	S1	S2	S3	S4	S5	ANSI CLASS150 L	ANSI CLASS150 t U-PVC	ANSI CLASS150 t PP PVDF
6	150	15.16	18.11	28.11	5.71	14.06	11.54	0.63	14.17	15.75	12.20	13.78	0.91	18.90	0.94	1.06

DIAPHRAGM VALVE TYPE 72

- NEAR-LINEAR FLOW CHARACTERISTICS
- TRANSPARENT GAUGE COVER (MADE OF POLYCARBONATE) PROTECTS THE INTERNAL AND EXTERNAL PARTS FROM CORROSIVE CHEMICAL SOLUTIONS AND GASES.
- THE GAUGE COVER ALSO SERVES AS AN INDICATOR, ALLOWING EASY CHECK OF OPENING DEGREE.

BASIC SPECIFICATIONS

VALVE TYPE——DIAPHRAGM VALVE TYPE 72
SIZE——200 mm, 250 mm (8 inch, 10 inch)
BODY MATERIAL——U-PVC / PP / PVDF
SEAL MATERIAL / DIAPHRAGM——EPDM / PTFE / FKM etc.
CONNECTION / FLANGED——JIS5K, JIS10K, DIN PN10, ANSI CLASS150
HIGH PURITY SERIES——LUBRICANT FREE

MODEL A (STANDARD)

	FLUID TEMPERATURE	MAXIMUM WORKING PRESSURE (NORMAL TEMPERATURE) MPa{kgf/cm²} DIAPHRAGM: RUBBER 200mm	DIAPHRAGM: RUBBER 250mm	DIAPHRAGM: PTFE 200mm	DIAPHRAGM: PTFE 250mm	CONNECTION METHOD FLANGED
U-PVC	0℃ ~ 60℃	0.3 {3.1}	0.3 {3.1}	0.2 {2.0}	0.2 {2.0}	○
PP	- 20℃ ~ 90℃	0.5 {5.1}	0.45 {4.6}	0.4 {4.1}	0.4 {4.1}	○
PVDF	- 40℃ ~ 120℃	0.5 {5.1}	0.45 {4.6}	0.4 {4.1}	0.4 {4.1}	○

MODEL B (OPTION)
* Made-to-order product.

	FLUID TEMPERATURE	MAXIMUM WORKING PRESSURE (NORMAL TEMPERATURE) MPa{kgf/cm²} DIAPHRAGM: RUBBER 200mm	DIAPHRAGM: RUBBER 250mm	DIAPHRAGM: PTFE 200mm	DIAPHRAGM: PTFE 250mm	CONNECTION METHOD FLANGED
U-PVC	0℃ ~ 60℃	0.5 {5.1}	0.45 {4.6}	0.4 {4.1}	0.4 {4.1}	○
PP	- 20℃ ~ 90℃	0.5 {5.1}	0.45 {4.6}	0.4 {4.1}	0.4 {4.1}	○
PVDF	- 40℃ ~ 120℃	—	—	0.4 {4.1}	0.4 {4.1}	○

NOTE The maximum working pressure is the value including the water hammer pressure. Be careful that the maximum working pressure is not exceeded during use.
* Concerning the allowable pressure for each temperature, material and actuator type, see the technical documents at the end of this catalog.
* The diaphragm may become loose due to temperature changes during long storage, operation stop or while in use. Check the conditions and then retighten the bolts and nuts between the bonnet and the body to the "bonnet tightening torque". (Failure to do so may cause fluid leakage.)

MANUAL



AUTOMATIC

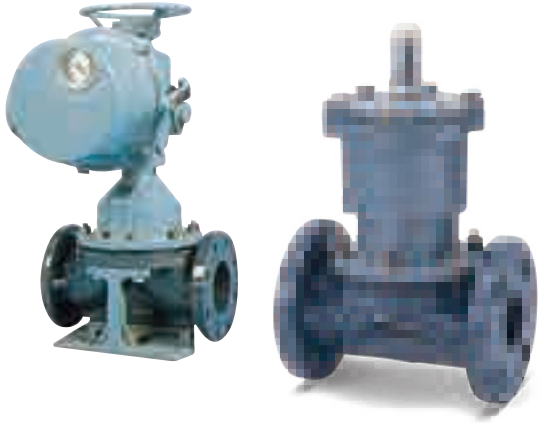

PARTS LIST MANUAL

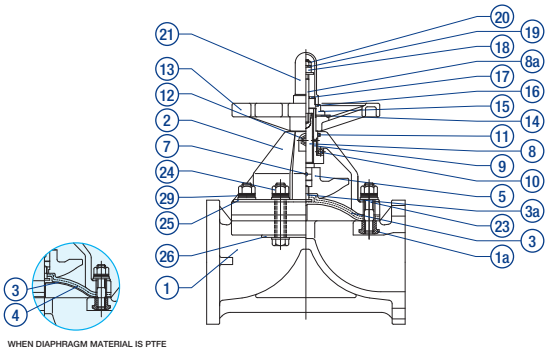

WHEN DIAPHRAGM MATERIAL IS PTFE

PART NO. / NAME	QTY	MATERIAL
①BODY	1	BODY—BONNET U-PVC—U-PVC PP—PP
②BONNET	1	PVDF—PPG (1) PVDF—PVDF
③DIAPHRAGM	1	EPDM, PTFE, etc.
④CUSHION(2)	1	EPDM, etc.
⑤COMPRESSOR	1	FC200 (Unichrome plating)
⑦COMPRESSOR PIN	1	SUS304
⑧STEM	1	C3604
⑧aDISPLAY LOT	1	SUS304

PART NO. / NAME	QTY	MATERIAL
⑨SLEEVE (A)	1	C3604
⑩THRUST BEARING (A)	1	SUJ2
⑪O-RING (A)	1	NBR
⑫GREASE NIPPLE	1	C3604
⑬HANDLE	1	PP
⑭NAMEPLATE	1	U-PVC
⑮CAP	1	PP
⑯GASKET (A)	1	EPDM
⑰VALVE SEAT	1	SUS304
⑱STOPPER	1	SS400 (Unichrome plating)

PART NO. / NAME	QTY	MATERIAL
⑲SPRING WASHER	1	SUS304
⑳SET NUT	1	SUS304
㉑GAUGE COVER	1	PC
㉓BOLT/NUT	–	SUS304
㉔BOLT/NUT	–	SUS304
㉕BONNET TOP LINER(3)	1 SET	SUS304
㉖BODY LINER(3)	1 SET	SUS304
㉙DISC SPRING WASHER(4)	–	SUS304
①aSTUD NUT	–	SUS304
③aEMBEDDED DIAPHRAGM FITTING (A)	1	SUS304, TITANIUM (with palladium)

NOTE (1) Bonnet PPG 15 – 100 mm: black. 125 – 250 mm: ivory. (2) is used when the diaphragm material is PTFE. (3) is used when the body material is PP or PVDF. (4) is used when the body material is PVDF. (5) The dimensional drawing and part drawing show a product that uses PVDF as the body material.

HANDLE ROTATION [FULL OPEN (ROTATION/LIFT) FULL CLOSE] MANUAL

SIZE	ROTATION	SIZE	ROTATION
200mm (8inch)	19	250mm (10inch)	25

COMPATIBLE ACTUATOR AUTOMATIC

PNEUMATIC TYPE AV For detailed specifications, see P.118

ELECTRIC TYPE S For detailed specifications, see P.131

PRODUCT MODEL CODE LIST

MANUAL

ACTUATION	TYPE	OPERATING SYSTEM	BODY MATERIAL	SEAL MATERIAL	CONNECTION	STANDARD	SIZE	HIGH PURITY SERIES
V	72	MH	*	*	F	*	***	1
V MANUAL VALVE	72 TYPE 72	MH ROUND HANDLE	U U-PVC P PP F PVDF G PVDF+PPG	E EPDM T PTFE	F FLANGED	1 JIS10K 5 5K D DIN A ANSI	200 200mm • 250 250mm	1 LUBRICANT FREE

PRODUCT MODEL CODE LIST

AUTOMATIC

ACTUATION	TYPE	ACTUATOR TYPE	ACTION / POWER SOURCE	BODY MATERIAL	SEAL MATERIAL	CONNECTION	STANDARD	SIZE	HIGH PURITY SERIES
A	72	*	*	*	*	F	*	***	1
A AUTOMATIC VALVE	72 TYPE 72	PNEUMATIC V TYPE AV ELECTRIC S TYPE S	PNEUMATIC F DOUBLE ACTING ELECTRIC 3 Three-Phase AC200V 4 Three-Phase AC400V	U U-PVC P PP F PVDF	E EPDM T PTFE	F FLANGED	1 JIS10K 5 JIS5K D DIN A ANSI	200 200mm • 250 250mm	1 LUBRICANT FREE

MANUAL

DIAPHRAGM VALVE TYPE 72

TYPE——V72MH

CONNECTION / FLANGED——JIS, DIN, ANSI

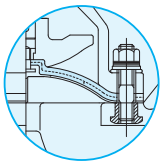

WHEN DIAPHRAGM MATERIAL IS PTFE

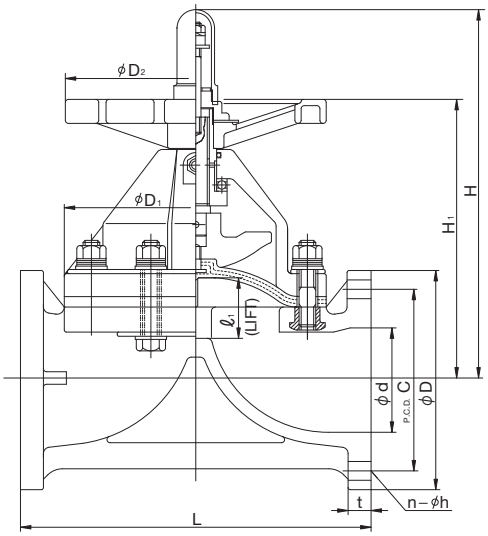

■ JIS, DIN (Unit: mm)

mm	d	D₁	D₂	ℓ	H₁	H	JIS											DIN PN10						
							JIS5K				JIS10K				L	t							t	
							D	C	n	h	D	C	n	h		U-PVC	PP PVDF	D	C	n	h	L	U-PVC	PP PVDF
200	196	430	410	95	419	627	320	280	8	23	330	290	12	23	570	28	32	295	340	8	22	600	30	34
250	247	540	560	128	510	778	385	345	12	23	400	355	12	25	680	30	37	350	395	12	22	730	34	36

■ ANSI (Unit: inch)

inch	mm	d	D₁	D₂	ℓ	H₁	H	ANSI					
								D	C	n	h	L	t
8	200	7.72	16.93	16.14	3.74	16.50	24.69	13.50	11.75	8	0.88	22.44	1.26
10	250	9.72	21.26	22.05	5.04	20.08	30.63	16.00	14.25	12	1.00	26.77	1.46

AUTOMATIC | PNEUMATIC | TYPE AV | DOUBLE ACTING | AIR TO OPEN | AIR TO CLOSE

DIAPHRAGM VALVE TYPE 72

TYPE——A72V

CONNECTION / FLANGED——JIS, DIN, ANSI

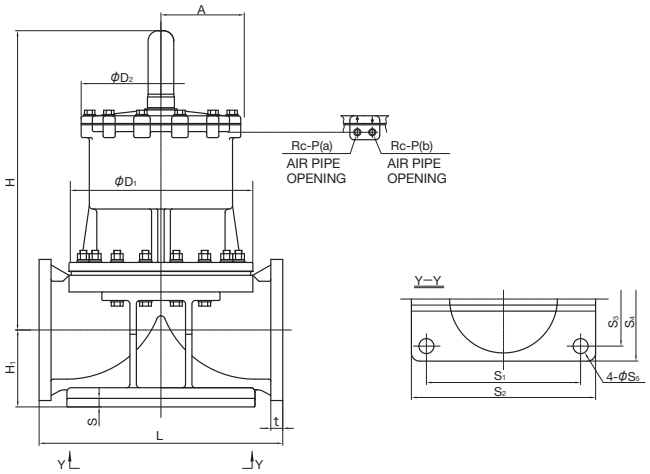

ACTUATOR SELECTION CHART

SIZE	ACTUATOR TYPE
200mm (8inch)	AV-6DA
250mm (10inch)	AV-7DA

For detailed specifications, see P.118

■ JIS, DIN (Unit: mm)

mm	D₁	D₂	A	H	H₁	S	S₁	S₂	S₃	S₄	S₅	P	JIS5K, JIS10K L	JIS5K, JIS10K t U-PVC	JIS5K, JIS10K t PP PVDF	DIN PN10 L	DIN PN10 t U-PVC	DIN PN10 t PP PVDF
200	430	385	195	742	179	20	390	440	330	380	23	3/8	570	28	32	600	30	34
250	540	520	260	890	215	23	470	540	390	460	25	3/8	680	30	37	730	34	36

■ ANSI (Unit: inch)

inch	mm	D₁	D₂	A	H	H₁	S	S₁	S₂	S₃	S₄	S₅	P	ANSI CLASS150 L	ANSI CLASS150 t
8	200	16.93	15.16	7.68	29.21	7.05	0.79	15.35	17.32	12.99	14.96	0.91	3/8	22.44	1.26
10	250	21.26	20.47	10.24	35.04	8.46	0.91	18.50	21.26	15.35	18.11	0.98	3/8	26.77	1.46

AUTOMATIC | ELECTRIC | TYPE S | Three-Phase AC200V • Three-Phase AC400V

DIAPHRAGM VALVE TYPE 72

TYPE——A72S

CONNECTION / FLANGED——JIS, DIN, ANSI

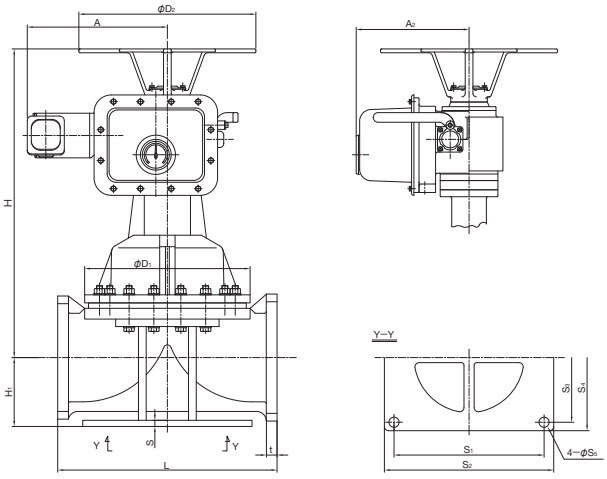

ACTUATOR SELECTION CHART

SIZE	ACTUATOR TYPE
200mm (8inch)	LTMD-01 (AUTOMATIC RETURN MECHANISM)
	LTKD-01 (MANUAL RETURN MECHANISM)
250mm (10inch)	LTMD-02 (AUTOMATIC RETURN MECHANISM)
	LTKD-02 (MANUAL RETURN MECHANISM)

For detailed specifications, see P.131

■ JIS, DIN (Unit: mm)

mm	D₁	D₂	H	H₁	A	A₂	S	S₁	S₂	S₃	S₄	JIS5K, JIS10K L	JIS5K, JIS10K t U-PVC	JIS5K, JIS10K t PP PVDF	DIN PN10 L	DIN PN10 t U-PVC	DIN PN10 t PP PVDF
200	430	460	802	179	357	293	20	390	440	330	380	570	28	32	600	30	34
250	540	460	989	215	375	328	23	470	540	390	460	680	30	37	730	34	36

■ ANSI (Unit: inch)

inch	mm	D₁	D₂	H	H₁	A	A₂	S	S₁	S₂	S₃	S₄	ANSI CLASS150 L	ANSI CLASS150 t
8	200	16.93	18.11	31.57	7.05	14.06	11.54	0.79	15.35	17.32	12.99	14.96	22.44	1.26
10	250	21.26	18.11	38.94	8.46	14.76	12.91	0.91	18.50	21.26	15.35	18.11	26.77	1.46

ASAHI AV

DIAPHRAGM VALVE TYPE AI / TRUE UNION DIAPHRAGM VALVE TYPE AI

- NEAR-LINEAR FLOW CHARACTERISTICS
- MAXIMUM WORKING PRESSURE OF 1.0 MPa. EXCELLENT OPEN/CLOSE DURABILITY TO WITHSTAND MORE THAN 500,000 CYCLES OF OPENING AND CLOSING.
- FOR THE AIR TO OPEN TYPE, TWO SPEC TYPES (1.0 MPa AND 0.7 MPa) ARE AVAILABLE.
- ALL-PLASTIC DESIGN ENSURES EXCELLENT CORROSION RESISTANCE.

DIAPHRAGM VALVE (TYPE AI) BASIC SPECIFICATIONS

VALVE TYPE——DIAPHRAGM VALVE (TYPE AI)
SIZE——15 mm—50 mm (1/2 inch—2 inch)
BODY MATERIAL——U-PVC / C-PVC / PP / PVDF
SEAL MATERIAL / DIAPHRAGM——EPDM / PTFE / FKM etc.
CONNECTION / FLANGED——JIS10K, DIN PN10, ANSI CLASS150
HIGH PURITY SERIES——LUBRICANT FREE

TRUE UNION DIAPHRAGM VALVE (TYPE AI) BASIC SPECIFICATIONS

VALVE TYPE——TRUE UNION DIAPHRAGM VALVE (TYPE AI)
SIZE——15 mm—50 mm (1/2 inch—2 inch)
BODY MATERIAL——U-PVC / C-PVC / PP / PVDF
SEAL MATERIAL / DIAPHRAGM——EPDM / PTFE
O-RING——EPDM / FKM
CONNECTION / SOCKET——JIS, DIN, ANSI
THREADED——Rc, Rp, NPT
HIGH PURITY SERIES——LUBRICANT FREE

	FLUID TEMPERATURE	MAXIMUM WORKING PRESSURE (NORMAL TEMPERATURE) MPa{kgf/cm²}	CONNECTION METHOD FLANGED	SOCKET	THREADED
U-PVC	0℃～60℃	1.0 {10.2}	○	○	○
C-PVC	0℃～90℃	1.0 {10.2}	○	○	○
PP	-20℃～90℃	1.0 {10.2}	○	○	○
PVDF	-20℃～120℃	1.0 {10.2}	○	○	○

NOTE The maximum working pressure is the value including the water hammer pressure. Be careful that the maximum working pressure is not exceeded during use.
* Concerning the allowable pressure for each temperature, material and actuator type, see the technical documents at the end of this catalog.
* The diaphragm may become loose due to temperature changes during long storage, operation stop or while in use. Check the conditions and then retighten the bolts and nuts between the bonnet and the body to the "bonnet tightening torque". (Failure to do so may cause fluid leakage.)

AUTOMATIC



DIAPHRAGM VALVE (TYPE AI)

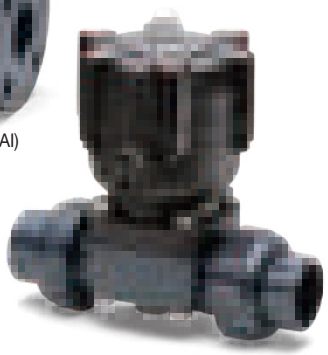

TRUE UNION DIAPHRAGM VALVE (TYPE AI)

COMPATIBLE ACTUATOR AUTOMATIC

PNEUMATIC TYPE AI

For detailed specifications, see P.120

PRODUCT MODEL CODE LIST ——DIAPHRAGM VALVE (TYPE AI)

ACTUATION	TYPE	ACTUATOR TYPE	ACTION / POWER SOURCE	BODY MATERIAL	SEAL MATERIAL	CONNECTION	STANDARD	SIZE	HIGH PURITY SERIES
A	DA	I	*	*	*	F	*	***	1
A AUTOMATIC VALVE	DA TYPE DA	I TYPE AI	F DOUBLE ACTING (1.0 MPa TYPE) G AIR TO OPEN (0.7 MPa TYPE) H AIR TO OPEN (1.0 MPa TYPE) S AIR TO CLOSE (1.0 MPa TYPE)	U U-PVC C C-PVC P PP F PVDF	E EPDM T PTFE	F FLANGED	1 JIS10K D DIN A ANSI	015 15mm ～ 050 50mm	1 LUBRICANT FREE

PRODUCT MODEL CODE LIST ——TRUE UNION DIAPHRAGM VALVE (TYPE AI)

ACTUATION	TYPE	ACTUATOR TYPE	ACTION / POWER SOURCE	BODY MATERIAL	SEAL MATERIAL	CONNECTION	STANDARD	SIZE	HIGH PURITY SERIES
A	TA	I	*	*	*	*	*	***	1
A AUTOMATIC VALVE	TA TYPE TA	I TYPE AI	F DOUBLE ACTING (1.0 MPa TYPE) G AIR TO OPEN (0.7 MPa TYPE) H AIR TO OPEN (1.0 MPa TYPE) S AIR TO CLOSE (1.0 MPa TYPE)	U U-PVC C C-PVC P PP F PVDF	E EPDM 1 PTFE+EPDM 2 PTFE+FKM	S SOCKET N THREADED P SPIGOT	J JIS10K D DIN A ANSI	015 15mm ～ 050 50mm	1 LUBRICANT FREE

AUTOMATIC | PNEUMATIC | TYPE AI | DOUBLE ACTING | AIR TO OPEN | AIR TO CLOSE

DIAPHRAGM VALVE (TYPE AI)

TYPE——ADAI

CONNECTION / FLANGED——JIS, DIN, ANSI

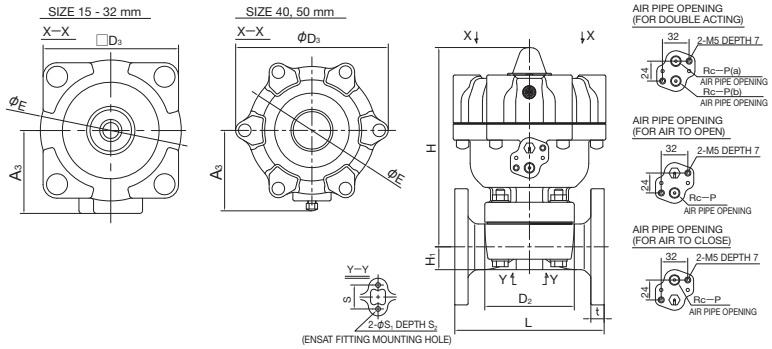

ACTUATOR SELECTION CHART

SIZE	ACTUATOR TYPE				
	DOUBLE ACTING	AIR TO OPEN (0.7 MPa TYPE)	AIR TO OPEN (1.0 MPa TYPE)	AIR TO OPEN (1.0 MPa TYPE)	AIR TO CLOSE
		DIAPHRAGM COMMON	PTFE DIAPHRAGM	EPDM DIAPHRAGM	
15mm (1/2inch)	AI-1DA	AI-1AO	AI-1AO-P	AI-1AO-E	AI-1AS
20mm (3/4inch)	AI-2DA	AI-2AO	AI-2AO-P	AI-2AO-E	AI-2AS
25mm (1inch)	AI-3DA	AI-3AO	AI-3AO-P	AI-3AO-E	AI-3AS
32mm (1 1/4inch)					
40mm (1 1/2inch)	AI-4DA	AI-4AO	AI-4AO-P	AI-4AO-E	AI-4AS
50mm (2inch)	AI-5DA	AI-5AO	AI-5AO-P	AI-5AO-E	AI-5AS

For detailed specifications, see P.120

■ JIS, DIN (Unit: mm)

mm	D2	D3	E	H		H1	A3		S	S1	S2	P	JIS10K						DIN PN10					
				AIR TO OPEN (0.7MPa) AIR TO CLOSE	AIR TO OPEN (1.0MPa)		DOUBLE ACTING	AIR TO OPEN AIR TO CLOSE					D	C	n	h	L	t	D	C	n	h	t	L
15	54×66	91	94	145	145	19.5	55	67	25	7	13	1/4	95	70	4	15	110	12	95	65	4	14	12	130
20	60×74	91	94	153	153	17.5	55	67	25	7	13	1/4	100	75	4	15	120	13	105	75	4	14	13	150
25	67×80	100	102	161	161	18.5	60	72	25	7	13	1/4	125	90	4	19	130	13	115	85	4	14	13	160
32	67×80	100	102	165	165	22.5	60	72	25	7	13	1/4	135	100	4	19	142	16	140	100	4	18	16	180
40	108×108	184	154	238	238	27.5	85	97	45	9	15	1/4	140	105	4	19	180	16	150	110	4	18	20	200
50	123×123	184	154	254	278	36	85	97	45	9	15	1/4	155	120	4	19	210	20	165	125	4	18	22	230

■ ANSI (Unit: inch)

inch	mm	D2	D3	E	H		H1	A3		S	S1	S2	P	ANSI			
					AIR TO OPEN (0.7MPa) AIR TO CLOSE	AIR TO OPEN (1.0MPa)		DOUBLE ACTING	AIR TO OPEN AIR TO CLOSE					L		t	
														GRINNELL STANDARD	AV STANDARD	U-PVC C-PVC	PP PVDF
1/2	15	2.13×2.60	3.58	3.70	5.71	5.71	0.77	2.17	2.64	0.98	0.28	0.51	1/4	4.25	4.33	0.43	
3/4	20	2.36×2.91	3.58	3.70	6.02	6.02	0.69	2.17	2.64	0.98	0.28	0.51	1/4	5.88	4.72	0.51	
1	25	2.64×3.15	3.94	4.02	6.34	6.34	0.73	2.36	2.83	0.98	0.28	0.51	1/4	5.88	5.12	0.59	
1 1/4	32	2.64×3.15	3.94	4.02	6.50	6.50	0.89	2.36	2.83	0.98	0.28	0.51	1/4	6.38	-	0.63	
1 1/2	40	4.25×4.25	7.24	6.06	9.37	9.37	1.08	3.35	3.82	1.77	0.35	0.59	1/4	6.94	7.09	0.63	
2	50	4.84×4.84	7.24	6.06	10.00	10.94	1.42	3.35	3.82	1.77	0.35	0.59	1/4	7.94	8.27	0.79	

AUTOMATIC | PNEUMATIC | TYPE AI | DOUBLE ACTING | AIR TO OPEN | AIR TO CLOSE

TRUE UNION DIAPHRAGM VALVE (TYPE AI)

TYPE——ATAI

CONNECTION / SOCKET——JIS, DIN, ANSI THREADED——Rc, Rp, NPT

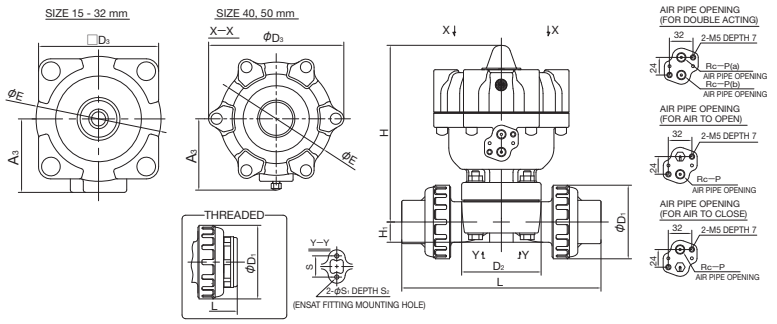

ACTUATOR SELECTION CHART

SIZE	ACTUATOR TYPE				
	DOUBLE ACTING	AIR TO OPEN (0.7 MPa TYPE)	AIR TO OPEN (1.0 MPa TYPE)	AIR TO OPEN (1.0 MPa TYPE)	AIR TO CLOSE
		DIAPHRAGM COMMON	PTFE DIAPHRAGM	EPDM DIAPHRAGM	
15mm (1/2inch)	AI-1DA	AI-1AO	AI-1AO-P	AI-1AO-E	AI-1AS
20mm (3/4inch)	AI-2DA	AI-2AO	AI-2AO-P	AI-2AO-E	AI-2AS
25mm (1inch)	AI-3DA	AI-3AO	AI-3AO-P	AI-3AO-E	AI-3AS
32mm (1 1/4inch)					
40mm (1 1/2inch)	AI-4DA	AI-4AO	AI-4AO-P	AI-4AO-E	AI-4AS
50mm (2inch)	AI-5DA	AI-5AO	AI-5AO-P	AI-5AO-E	AI-5AS

For detailed specifications, see P.120

■ JIS, DIN (Unit: mm)

mm	D1	D2	D3	E	H		H1	A3		S	S1	S2	P	JIS			DIN							
					AIR TO OPEN (0.7MPa) AIR TO CLOSE	AIR TO OPEN (1.0MPa)		DOUBLE ACTING	AIR TO OPEN AIR TO CLOSE					SOCKET L	THREADED L		SOCKET L		THREADED L		SPIGOT L		SPIGOT t	
														U-PVC C-PVC	U-PVC C-PVC	PP PVDF	U-PVC C-PVC	PP PVDF	U-PVC C-PVC	PP PVDF	U-PVC C-PVC	PP PVDF	PP	PVDF
15	48	54×66	91	94	145	145	19.5	55	67	25	7	13	1/4	134	128	128	128	125	128	128	150	150	2.5	1.9
20	60	60×74	91	94	153	153	17.5	55	67	25	7	13	1/4	156	148	148	147	141	148	148	172	172	2.7	1.9
25	70	67×80	100	102	161	161	18.5	60	72	25	7	13	1/4	186	172	172	172	164	172	172	195	195	3.0	2.4
32	82	67×80	100	102	165	165	22.5	60	72	25	7	13	1/4	200	188	188	188	177	188	188	212	212	3.7	2.4
40	100	108×108	184	154	238	238	27.5	85	97	45	9	15	1/4	271	245	245	246	231	245	245	276	276	4.6	3.0
50	106	123×123	184	154	254	278	36	85	97	45	9	15	1/4	303	281	278	294	274	281	278	308	307	5.8	3.0

■ ANSI (Unit: inch)

inch	mm	D1	D2	D3	E	H		H1	A3		S	S1	S2	P	ANSI			
						AIR TO OPEN (0.7MPa) AIR TO CLOSE	AIR TO OPEN (1.0MPa)		DOUBLE ACTING	AIR TO OPEN AIR TO CLOSE					SOCKET L		THREADED L	
															U-PVC C-PVC	PP PVDF	U-PVC C-PVC	PP PVDF
1/2	15	1.89	2.13×2.60	3.58	3.70	5.71	5.71	0.77	2.17	2.64	0.98	0.28	0.51	1/4	5.47	5.43	5.04	5.04
3/4	20	2.36	2.36×2.91	3.58	3.70	6.02	6.02	0.69	2.17	2.64	0.98	0.28	0.51	1/4	6.18	6.09	5.83	5.83
1	25	2.76	2.64×3.15	3.94	4.02	6.34	6.34	0.73	2.36	2.83	0.98	0.28	0.51	1/4	7.32	7.24	6.77	6.77
1 1/4	32	3.23	2.64×3.15	3.94	4.02	6.50	6.50	0.89	2.36	2.83	0.98	0.28	0.51	1/4	7.95	7.80	7.40	7.40
1 1/2	40	3.94	4.25×4.25	7.24	6.06	9.37	9.37	1.08	3.35	3.82	1.77	0.35	0.59	1/4	10.47	10.28	9.65	9.65
2	50	4.17	4.84×4.84	7.24	6.06	10.00	10.94	1.42	3.35	3.82	1.77	0.35	0.59	1/4	11.54	11.54	11.06	10.95

DIAPHRAGM VALVE TYPE 16

- NEAR-LINEAR FLOW CHARACTERISTICS
- COMPACT BODY ALLOWS FOR INSTALLATION IN LIMITED PIPING SPACE.
- EXCELLENT OPEN/CLOSE DURABILITY TO WITHSTAND MORE THAN 1,000,000 CYCLES OF OPENING AND CLOSING
- ALL-PLASTIC BODY ENSURES EXCELLENT CORROSION RESISTANCE.

BASIC SPECIFICATIONS

VALVE TYPE——**DIAPHRAGM VALVE TYPE 16**

SIZE——**15 mm—50 mm (1/2 inch—2 inch)**

BODY MATERIAL——**U-PVC**

SEAL MATERIAL / DIAPHRAGM——**EPDM** **PTFE**

O-RING——**EPDM** **FKM**

CONNECTION / FLANGED——**JIS10K, DIN PN10, ANSI CLASS150**

SOCKET——**JIS, DIN, ANSI**

THREADED——**Rc, Rp, NPT**

	FLUID TEMPERATURE	MAXIMUM WORKING PRESSURE (NORMAL TEMPERATURE) MPa{kgf/cm²}		CONNECTION METHOD		
		15 mm - 25 mm	40 mm, 50 mm	FLANGED	SOCKET	THREADED
U-PVC	0℃ ~ 50℃	0.5 {5.1}	0.4 {4.1}	○	○	○

NOTE The maximum working pressure is the value including the water hammer pressure. Be careful that the maximum working pressure is not exceeded during use.

* Concerning the allowable pressure for each temperature and material, see the technical documents at the end of this catalog.

AUTOMATIC



COMPATIBLE ACTUATOR AUTOMATIC

PNEUMATIC TYPE AD

For detailed specifications, see P.121

PRODUCT MODEL CODE LIST AUTOMATIC

ACTUATION	TYPE	ACTION / POWER SOURCE	BODY MATERIAL	SEAL MATERIAL	CONNECTION	SIZE	HIGH PURITY SERIES	OPERATION PORT DIRECTION	OPTION
A	16	**	U	*	**	***	1	*	*

- ACTUATION: A AUTOMATIC VALVE
- TYPE: 16 TYPE 16
- ACTION / POWER SOURCE: DF DOUBLE ACTING; DG AIR TO OPEN
- BODY MATERIAL: U U-PVC
- SEAL MATERIAL: 1 PTFE/EPDM; 2 PTFE/FKM; E EPDM/EPDM
- SIZE: 015 15mm ~ 050 50mm
- HIGH PURITY SERIES: 1 LUBRICANT FREE

CONNECTION:

SJ	SOCKET, JIS
S8	SOCKET, ASTM SCH80
SD	SOCKET, DIN
NJ	THREADED, Rc
NA	THREADED, NPT
ND	THREADED, Rp
F1	FLANGED, 10K
FA	FLANGED, ANSI
FD	FLANGED, DIN

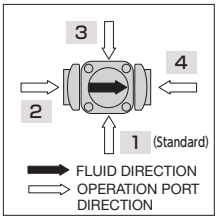

OPERATION PORT DIRECTION:

1	NONE
2	SPEED CONTROLLER
3	FULL OPENING ADJUSTMENT
4	FULL OPENING ADJUSTMENT / SPEED CONTROLLER
5*	FULL OPENING ADJUSTMENT / INDICATOR
6*	FULL OPENING ADJUSTMENT / INDICATOR / SPEED CONTROLLER

* Only applicable for sizes of 15 mm to 25 mm.

OPTION:

1	NONE
2	SPEED CONTROLLER
3	FULL OPENING ADJUSTMENT
4	FULL OPENING ADJUSTMENT / SPEED CONTROLLER
5*	FULL OPENING ADJUSTMENT / INDICATOR
6*	FULL OPENING ADJUSTMENT / INDICATOR / SPEED CONTROLLER

* Only applicable for sizes of 15 mm to 25 mm.

AUTOMATIC | PNEUMATIC | TYPE AD | DOUBLE ACTING | AIR TO OPEN | AIR TO CLOSE

DIAPHRAGM VALVE TYPE 16

TYPE——A16D

CONNECTION / FLANGED, SOCKET, THREADED——JIS, DIN, ANSI

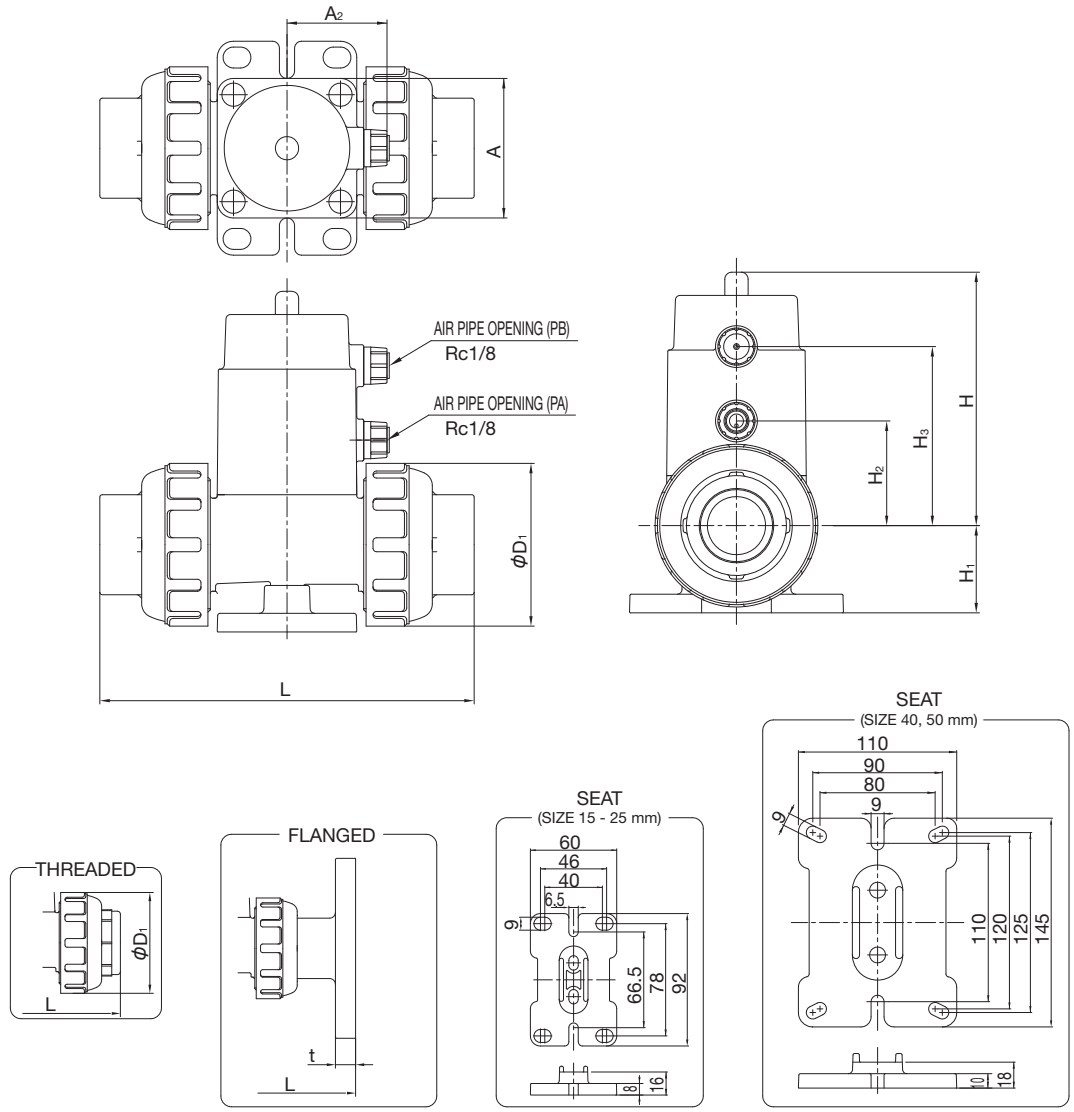

■ JIS, DIN (Unit: mm)

mm	D1	H	H1	H2	H3	A	A2	JIS FLANGED JIS10K L	JIS FLANGED JIS10K t	JIS SOCKET L	JIS THREADED L	DIN FLANGED PN10 L	DIN FLANGED PN10 t	DIN SOCKET L	DIN THREADED L
15	48	79.0	33.0	33	60	□50	38	158	12	124.4	117.0	145	12	117	117
20	60	108.0	36.5	44	76	□60	43	191	14	147.0	139.0	169	14	138	139
25	70	109.0	37.5	45	77	□60	43	205.5	14	163.5	149.5	178.5	14	149.5	149.5
40	100	161.5	53.0	68	115	□95	60	264	16	241.0	215.0	252	16	216	215
50	126	188.5	66.0	83	137	□115	70.5	297	16	283.0	260.0	293	16	260	260

■ ANSI (Unit: inch)

inch	mm	D1	H	H1	H2	H3	A	A2	ANSI FLANGED L	ANSI FLANGED t	ANSI SOCKET L	ANSI THREADED L
1/2	15	1.89	3.11	1.30	1.30	2.36	1.97	1.49	6.22	0.47	5.04	4.61
3/4	20	2.36	4.25	1.44	1.73	2.99	2.36	1.69	7.52	0.55	5.83	5.47
1	25	2.76	4.29	1.48	1.77	3.03	2.36	1.69	8.09	0.55	6.44	5.89
1 1/2	40	3.94	6.36	2.09	2.68	4.53	3.74	2.36	10.39	0.63	9.29	8.46
2	50	4.96	7.42	2.60	3.27	5.39	4.53	2.77	11.69	0.63	10.71	10.24

OPTIONS

In addition to the standard product lines described on the previous pages, the following options are also available according to your requirements:

❶ PVDF Cushion Cover Model

For corrosive fluid transport lines, we offer PVDF cushion cover accessories having excellent gas barrier performance to prevent deterioration due to permeation of gas from the diaphragm.

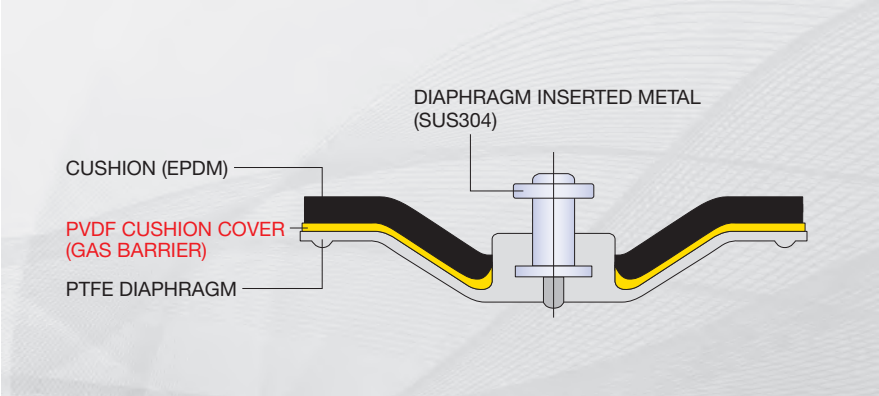

❷ Electrolytic Model

For chlorine gas lines in electrolysis plants, we offer electrolytic options using highly corrosion resistant special metal to prevent corrosion of embedded diaphragm fittings.

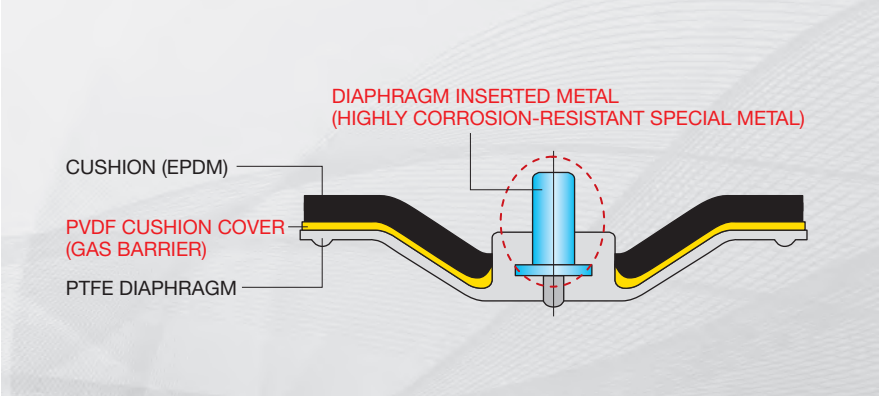

❸ EL Model

For lines in harsher conditions, we offer EL Model comprising a main body (EL-PVDF) made of special materials and a PTFE diaphragm (EL-PTFE).

<Size>
15 - 100 mm: Standard model applicable
125 - 250 mm: Made-to-order

* For details, contact our sales office in your area.

<Field test result>
- Soda electrolysis plant / returned brine
- 88°C, 0.3 MPa, used for 5 years

[EL-PVDF]
Without blister



[PVDF]
With blister



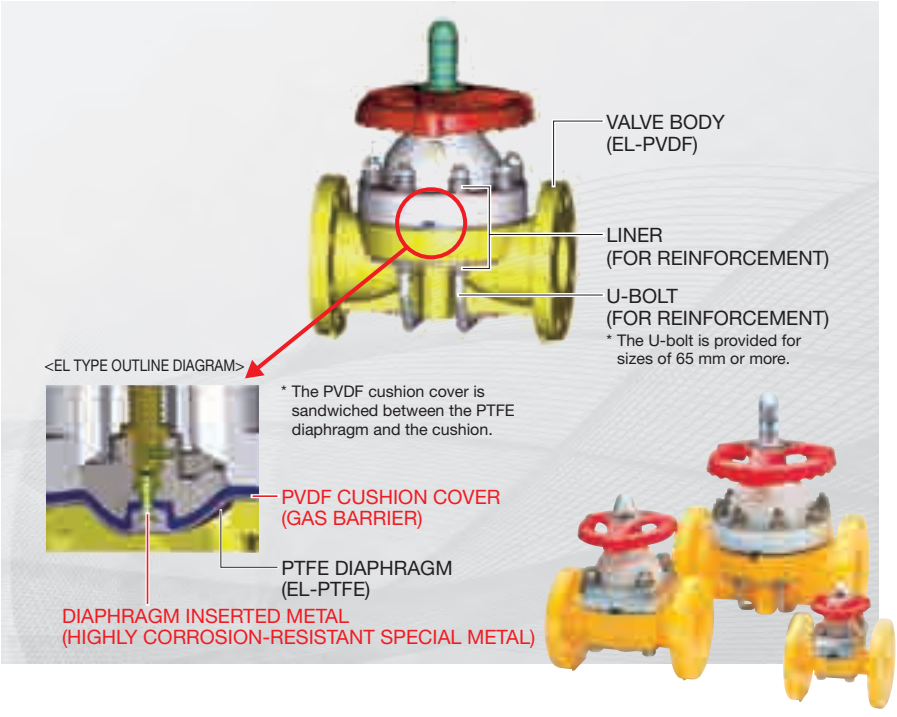

❹ MODEL A AND MODEL B

Diaphragm valve type 72 (size: 200 mm, 250 mm) can be divided into Model A and Model B.
Model A is the standard type. Normally, select Model A.
Select Model B when Model A cannot be used due to the relationship between the working temperature and pressure.

	MODEL A (STANDARD)	MODEL B (OPTION)
BODY MATERIAL: **U-PVC**	DIAPHRAGM MATERIAL: RUBBER AND PTFE 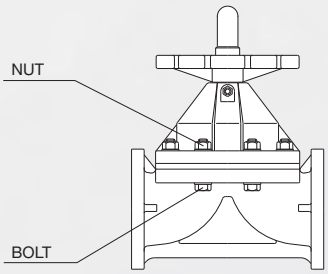	DIAPHRAGM MATERIAL: RUBBER AND PTFE 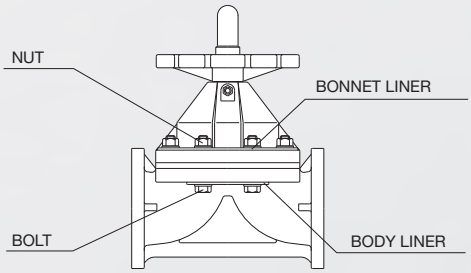
BODY MATERIAL: **PP**	DIAPHRAGM MATERIAL: RUBBER AND PTFE 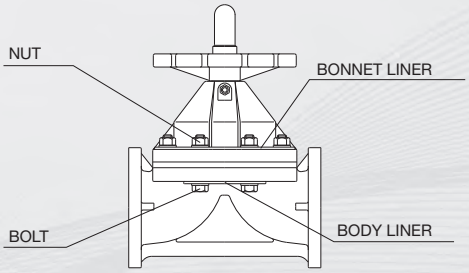	DIAPHRAGM MATERIAL: RUBBER AND PTFE 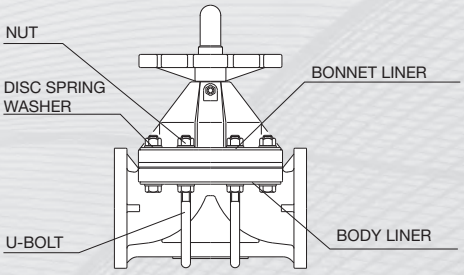
BODY MATERIAL: **PVDF**	DIAPHRAGM MATERIAL: RUBBER AND PTFE 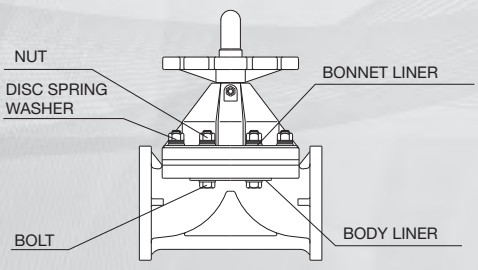	DIAPHRAGM MATERIAL: PTFE 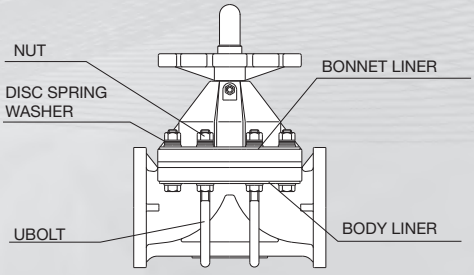

ASAHI AV
BALL VALVE

P.043 BALL VALVE TYPE 21, 21α

P.053 WATER BALL VALVE

P.057 3 WAY BALL VALVE TYPE 23

P.063 3 WAY BALL VALVE TYPE 23 H

P.065 LAB COCK

P.067 COMPACT BALL VALVE TYPE 27



BALL VALVE LINEUP

APPLICATION	TYPE	SIZE	MATERIAL			
			U-PVC	C-PVC	PP	PVDF
FOR CHEMICALS	21α	15 — 50mm	●	●		
	21	15 — 50mm			●	●
		65 —100mm	●	●	●	●
FOR WATER	WATER BALL VALVE	15 — 50mm	●			
3 WAY BALL	23	15 —100mm	●	●	●	●
	23H	25 — 40mm			●	
LAB COCK	—	1/4 —3/8inch	●			
COMPACT SIZE	27	13 — 50mm	●	●		

AVAILABLE OPTIONS AUTOMATIC

* Options other than those listed below are also available. Contact us for inquiry.

	PNEUMATIC			ELECTRIC	
	TYPE TA	TYPE AA	TYPE VC	TYPE T	TYPE V
SOLENOID VALVE (NAMUR)	●	●			
SOLENOID VALVE (WITH EXHAUST THROTTLE VALVE WITH SILENCER)			●*1		
FILTER REGULATOR	●	●			
SPEED CONTROLLER	●	●	●	●*3	
BYPASS VALVE (WITH SPEED CONTROLLER)	●	●			
LIMIT SWITCH BOX	●	●	●		
LIMIT SWITCH	●	●			
OUTPUT CONTACT LIMIT SWITCH				STANDARD	
INTERMEDIATE OUTPUT CONTACT LIMIT SWITCH				●*3	
PROXIMITY SWITCH	●				
E/P POSITIONER	●				
P/P POSITIONER	●				
E/E POSITIONER				●*3	
MANUAL OPERATION LEVER	●				
MANUAL OVERRIDE	●			●	
FULL OPENING ADJUSTMENT	●				
SPECIAL PAINTING (ACTUATOR ONLY)	●			●	
SPECIAL FITTING (STAINLESS STEEL)	●	●		●	
METAL INSERT PROVIDED (WITH ENSAT)	●	●		●	
SPACE HEATER				●*2	STANDARD
POTENTIOMETER				●*3	

*1 Not compatible with the NAMUR standard. *2 Provided as standard for 65 mm or more.
*3 When it is mounted on a valve with a size of 50 mm or less, the actuator specifications will change.


SOLENOID VALVE


SPEED CONTROLLER


LIMIT SWITCH BOX


LIMIT SWITCH


POSITIONER

BALL VALVE TYPE 21, 21α

- EQUIPPED WITH TOP FLANGE, ALLOWING FOR EASY CHANGE TO AUTOMATIC VALVE.
- COMES WITH BOTTOM STAND TO FACILITATE MOUNTING ON RACKS AND PANELS (See the Ensat mounting procedure on page 69).
- DOUBLE O-RING ON THE STEM IMPROVES DURABILITY AND SEALING PROPERTY.

MANUAL



AUTOMATIC





BASIC SPECIFICATIONS

VALVE TYPE——**BALL VALVE TYPE 21, 21α**
SIZE——**15 mm—100 mm (1/2 inch—4 inch)**
BODY MATERIAL——**U-PVC C-PVC PP PVDF**
SEAL MATERIAL / O-RING——**EPDM FKM etc.**
CONNECTION / FLANGED——**JIS5K, JIS10K, DIN PN10, ANSI CLASS150**
SOCKET——**JIS, DIN, ANSI**
THREADED——**Rc, Rp, NPT**
HIGH PURITY SERIES——**LUBRICANT FREE**

	FLUID TEMPERATURE	MAXIMUM WORKING PRESSURE [NORMAL TEMPERATURE] MPa{kgf/cm²}	CONNECTION METHOD		
			FLANGED	SOCKET	THREADED
U-PVC	0℃～ 50℃	1.0 {10.2}	○	○	○
C-PVC	0℃～ 90℃	1.0 {10.2}	○	○	○
PP	-20℃～ 80℃	1.0 {10.2}	○	○	○
PVDF	-20℃～100℃	1.0 {10.2}	○	○	○

NOTE (1) The ball-type valves have dead spaces for structural reasons. Note that volatile liquids, such as hydrogen peroxide (H_2O_2) and sodium hypochlorite (NaClO), vaporize in those dead spaces, which may cause abnormal pressure increase in the valve. (When the internal pressure abnormally increases due to vaporization, the gas will be compressive fluid. If the valve breaks in this state, it will be very dangerous, causing explosion and scattering of fragments.) (2) The maximum working pressure is the value including the water hammer pressure. Be careful that the maximum working pressure is not exceeded during use.

* Concerning the allowable pressure for each temperature and material, see the technical documents at the end of this catalog.



■**Multi Functional Handle**
Removing the handle and placing the raised lugs into the carrier allow for easy disassembly of the valve.
* The handle has other colors. (blue, white, yellow)(Option)



PARTS LIST MANUAL

FLANGED

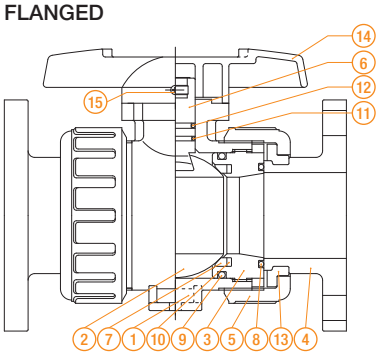

(DETAILS OF STEM)



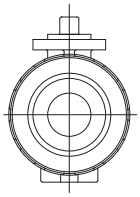

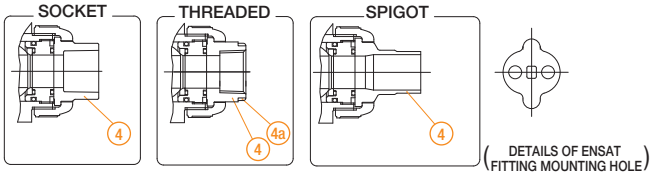

PART NO. / NAME	QTY	MATERIAL
①BODY	1	U-PVC, C-PVC, PP, PVDF
②BALL	1	U-PVC, C-PVC, PP, PVDF
③UNION	1	U-PVC, C-PVC, PP, PVDF
④END CONNECTOR	2	U-PVC, C-PVC, PP, PVDF
④aRING	2	SUS304 (Made of C-PVC. Used for threaded type of 15 to 25 mm.)
⑤UNION NUT	2	U-PVC, C-PVC, PP, PVDF

PART NO. / NAME	QTY	MATERIAL
⑥STEM	1	U-PVC, C-PVC, PP, PVDF
⑦SEAT	2	PTFE
⑧O-RING (A)	2	EPDM, FKM, etc.
⑨O-RING (B)	1	EPDM, FKM, etc.
⑩O-RING (C)	2	EPDM, FKM, etc.
⑪O-RING (D)	1	EPDM, FKM, etc.

PART NO. / NAME	QTY	MATERIAL
⑫O-RING (E)	1	EPDM, FKM, etc.
⑬STOP RING	2	PVDF (Used for flanged type.)
⑭HANDLE	1	ABS
⑮TAPPING SCREW (A)	1	SUS304

COMPATIBLE ACTUATOR AUTOMATIC

PNEUMATIC TYPE TA — For detailed specifications, see P.124
PNEUMATIC TYPE AA — For detailed specifications, see P.123
ELECTRIC TYPE T — For detailed specifications, see P.139

TYPE CATEGORY MANUAL AUTOMATIC

The types are classified according to the size and material.

SIZE \ BODY MATERIAL	U-PVC	C-PVC	PP	PVDF
15mm – 50mm	TYPE 21α		TYPE 21	
65mm – 100mm	TYPE 21			

PRODUCT MODEL CODE LIST — MANUAL

ACTUATION	TYPE	OPERATING SYSTEM	BODY MATERIAL	SEAL MATERIAL	CONNECTION	STANDARD	SIZE	HIGH PURITY SERIES
V	**	LV	*	*	*	*	***	1
V MANUAL VALVE	21 TYPE 21 2A TYPE 21α	LV LEVER TYPE	U U-PVC C C-PVC P PP F PVDF	E EPDM V FKM	S SOCKET N THREADED P SPIGOT F FLANGED	J JIS D DIN A ANSI 1 JIS10K 5 5K	015 15mm ⌇ 100 100mm	1 LUBRICANT FREE

PRODUCT MODEL CODE LIST — AUTOMATIC

ACTUATION	TYPE	ACTUATOR TYPE	ACTION / POWER SOURCE	BODY MATERIAL	SEAL MATERIAL	CONNECTION	STANDARD	SIZE	SPACE HEATER	HIGH PURITY SERIES
A	**	*	*	*	*	*	*	***	OC※	1
A AUTO-MATIC VALVE	21 TYPE 21 2A TYPE 21α	PNEUMATIC K TYPE TA A TYPE AA ELECTRIC T TYPE T	PNEUMATIC F DOUBLE ACTING G AIR TO OPEN S AIR TO CLOSE ELECTRIC 1 Single-Phase 100V 2 Single-Phase 200V	U U-PVC C C-PVC P PP F PVDF	E EPDM V FKM	S SOCKET N THREADED P SPIGOT F FLANGED	J JIS D DIN A ANSI 1 JIS10K 5 JIS5K	015 15mm ⌇ 100 100mm	OC 0C * Indicate only for electric type only.	1 LUBRICANT FREE

NOTE (1) PP and PVDF socket types are weld type. Note, however, that JIS PP 32-mm socket type is not produced.
(2) PVDF socket type compatible with the JIS standard is not available.
(3) A handle set with a lock mechanism (for malfunction prevention) is available as an option.

Compatibility of face-to-face dimensions

Both valve face-to-face dimensions and body face-to-face dimensions are compatible between type 21α and conventional type 21. Also, a change to type 21α is available using the end connector and union nut for the existing piping (type 21).

Compatibility of parts

Some of the body component parts are not compatible between type 21α and type 21. Be careful when parts are changed on site. For details of parts compatibility, contact our sales office in your area.

Identification of product

[Difference between products] (See Fig. 1.) The body appearance of type 21α is different from that of type 21 to discriminate between them.

Related materials

Due to the modification and release of type 21α, some parts of related materials, such as outline drawing, instruction manual, and set parts list, have been revised.
Please obtain the latest version at our sales office in your area.

Performance and options

There is no change in the performance (relationship between the working pressure and temperature, Cv value, chemical resistance, etc.) and options between type 21 and 21α.

Fig. 1: Difference between products

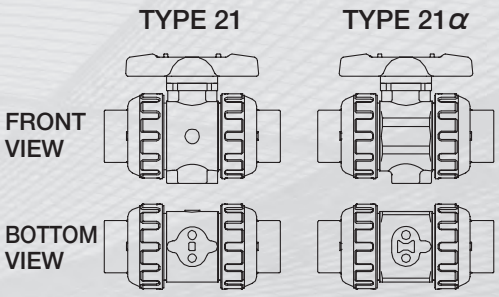

MANUAL

BALL VALVE TYPE 21, 21α

TYPE——V21LV, V2ALV

CONNECTION / FLANGED, SOCKET, THREADED——JIS, DIN, ANSI SPIGOT——DIN

FLANGED

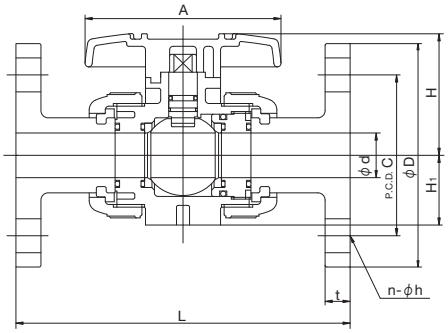

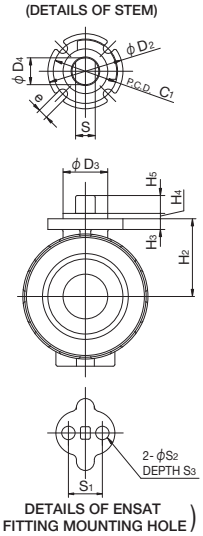

■ JIS, DIN (Unit: mm)

mm	d	d'	D1	D2	D3	D4	C1	H	H1	H2	H3	H4	H5	A	S	S1	S2	S3	e
10	13	-	46	-	-	-	-	43.5	-	-	-	-	-	80	-	-	-	-	-
15	15	-	48	42	25	13.5	36	51.5	29	30	6	3	8	92	10.5	19	7.3	11	5.5
20	20	-	60	42	25	15	36	59.5	35	36.5	6	3	10	100	11	19	7.3	11	5.5
25	25	-	70	42	25	15	36	68	39	43.5	6	3	10	110	11	19	7.3	11	5.5
32	32	-	82	48	30	19	42	80.5	47	52.5	8	3	10	121	15	30	9	15	5.5
40	40	-	100	57	35	23	50	89	55	61	10	3	12	131	18	30	9	15	6.5
50	51	-	126	57	35	23	50	102.5	66	72.5	10	3	12	159	18	30	9	15	6.5
65	65	58	133	81	55	30	70	126	72	85	13	3	16	200	24	48	9	6	9
80	78	68.5	152	81	55	30	70	140	85	94	13	3	19	240	24	55	11	7	9
100	100	90	210	116	70	40	102	178	110	126	16	3	23	300	34	65	11	8	11

JIS

mm	FLANGED JIS5K D	C	n	h	JIS10K D	C	n	h	L U-PVC C-PVC	L PP	L PVDF	t	SOCKET U-PVC, C-PVC d1	ℓ	1/T	L	PP d1	d1'	ℓ	L	THREADED d2	ℓ	L U-PVC C-PVC	L PP	L PVDF
15	80	60	4	12	95	70	4	15	143	143	143	12	22.11	20	1/34	109	21.2	20.2	20	108	Rc1/2	15	102	100	100
20	85	65	4	12	100	75	4	15	172	172	172	14	26.13	24	1/34	128	26.2	25.2	23	126	Rc3/4	17	120	119	119
25	95	75	4	12	125	90	4	19	187	187	187	14	32.16	27	1/34	145	33.0	32.0	25	141	Rc1	20	131	130	130
32	115	90	4	15	135	100	4	19	190	190	190	16	38.19	30	1/34	162	-	-	-	-	Rc11/4	22	150	146	146
40	120	95	4	15	140	105	4	19	212	212	212	16	48.21	37	1/37	189	47.0	46.0	28	171	Rc11/2	25	163	160	160
50	130	105	4	15	155	120	4	19	234	234	234	16	60.25	42	1/37	220	59.0	58.0	28	192	Rc2	28	197	194	194
65	155	130	4	15	175	140	4	19	261	257	256	18	76.60	61	1/48	273	75.0	73.0	35	219	Rc21/2	32	215	213	212
80	180	145	4	19	185	150	8	19	306	305	302	18	89.60	64	1/49	316	88.0	86.0	35	257	Rc3	35	265	264	261
100	200	165	8	19	210	175	8	19	374	374	369	18	114.70	84	1/56	419	113.0	111.0	45	341	Rc4	45	362	362	357

DIN

mm	FLANGED DIN PN10/PN16 D	C	n	h	L U-PVC C-PVC	L PP	L PVDF	t	SOCKET U-PVC, C-PVC d1	ℓ	L	PP, PVDF d1	d1'	ℓ	L PP	L PVDF	THREADED d2	ℓ	L U-PVC C-PVC	L PP	L PVDF	SPIGOT U-PVC d3	d3'	ℓ	PP, PVDF d3	ℓ	t PP	t PVDF	L PP	L PVDF
10	90	60	4	14	120	119	119	12	16	14	99	15.5	15.4	13	96	96	Rp3/8	15	99	98	98	16	13	16	-	-	-	-	114	114
15	95	65	4	14	130	130	130	12	20	16	102	19.5	19.3	14.5	99	99	Rp1/2	15	102	100	100	20	15	18.5	20	18.5	2.5	1.9	124	124
20	105	75	4	14	150	150	150	14	25	19	119	24.5	24.3	16	113	113	Rp3/4	17	120	119	119	25	20	24	25	22	2.7	1.9	144	144
25	115	85	4	14	160	160	160	14	32	22	131	31.5	31.3	18	123	123	Rp1	20	131	130	130	32	25	24.5	32	22.5	3.0	2.4	154	154
32	140	100	4	18	180	180	180	16	40	26	150	39.45	39.2	20.5	139	139	Rp11/4	22	150	146	146	40	31	28	40	26	3.7	2.4	174	174
40	150	110	4	18	200	200	200	16	50	31	164	49.45	49.2	23.5	149	149	Rp11/2	25	163	160	160	50	40	34	50	32	4.6	3.0	194	194
50	165	125	4	18	230	230	230	16	63	38	197	62.5	62.1	27.5	176	176	Rp2	28	197	194	194	63	51	38	63	36	5.8	3.0	224	224
65	185	145	4	18	290	288	287	18	75	44	233	74.25	73.95	31	205	204	Rp21/2	32	215	213	212	75	65	44	75	38	6.9	3.6	245	244
80	200	160	8	18	312	311	308	21	90	51	284	89.2	88.85	35.5	252	249	Rp3	35	265	264	261	90	80	51	90	38	8.2	4.3	296	293
100	220	180	8	18	352	352	347	18	110	61	351	109.05	108.65	41.5	312	307	Rp4	45	340	340	335	110	93.6	46	110	44.5	10.0	5.3	355	350

■ ANSI (Unit: inch)

inch	mm	d	d'	D1	D2	D3	D4	C1	H	H1	H2	H3	H4	H5	A	S	S1	S2	S3	e
1/2	15	0.59	-	1.89	1.65	0.98	0.53	1.42	2.03	1.14	1.18	0.24	0.12	0.31	3.62	0.41	0.75	0.29	0.43	0.22
3/4	20	0.79	-	2.36	1.65	0.98	0.59	1.42	2.34	1.38	1.44	0.24	0.12	0.39	3.94	0.43	0.75	0.29	0.43	0.22
1	25	0.98	-	2.76	1.65	0.98	0.59	1.42	2.68	1.54	1.71	0.24	0.12	0.39	4.33	0.43	0.75	0.29	0.43	0.22
1 1/4	32	1.26	-	3.23	1.89	1.18	0.75	1.65	3.17	1.85	2.07	0.31	0.12	0.39	4.76	0.59	1.18	0.35	0.59	0.22
1 1/2	40	1.57	-	3.94	2.24	1.38	0.91	1.97	3.50	2.17	2.40	0.39	0.12	0.47	5.16	0.71	1.18	0.35	0.59	0.26
2	50	2.01	-	4.96	2.24	1.38	0.91	1.97	4.04	2.60	2.85	0.39	0.12	0.47	6.26	0.71	1.18	0.35	0.59	0.26
2 1/2	65	2.56	2.28	5.24	3.19	2.17	1.18	2.76	4.96	2.83	3.35	0.51	0.12	0.63	7.87	0.94	1.89	0.35	0.24	0.35
3	80	3.07	2.70	5.98	3.19	2.17	1.18	2.76	5.51	3.35	3.70	0.51	0.12	0.75	9.45	0.94	2.17	0.43	0.28	0.35
4	100	3.94	3.54	8.27	4.57	2.76	1.57	4.02	7.01	4.33	4.96	0.63	0.12	0.91	11.81	1.34	2.56	0.43	0.31	0.43

ANSI

inch	mm	FLANGED ANSI CLASS 150 D	C	n	h	L U-PVC C-PVC	L PP	L PVDF	t	H1	SOCKET U-PVC, C-PVC ASTM SCH40 d1	d1'	ℓ	L	ASTM SCH80 d1	d1'	ℓ	L	PP, PVDF d1	ℓ	L PP	L PVDF	d2	ℓ	L U-PVC C-PVC	L PP	L PVDF
1/2	15	3.50	2.38	4	0.62	5.63	5.63	5.63	0.47	3.70	-	-	-	-	0.848	0.836	0.875	4.45	0.83	0.870	4.45	4.45	1/2-14 NPT	0.59	4.02	4.02	4.02
3/4	20	3.88	2.75	4	0.62	6.77	6.77	6.77	0.55	4.50	-	-	-	-	1.058	1.046	1.000	5.08	1.03	1.000	5.08	5.08	3/4-14 NPT	0.67	4.72	4.72	4.72
1	25	4.25	3.12	4	0.62	7.36	7.36	7.36	0.55	5.24	-	-	-	-	1.325	1.310	1.125	5.75	1.30	1.130	5.75	5.75	1-111/2 NPT	0.79	5.16	5.16	5.16
1 1/4	32	4.62	3.50	4	0.62	7.48	7.48	7.48	0.63	6.50	-	-	-	-	1.670	1.655	1.250	6.46	1.65	1.250	6.46	6.46	11/4-111/2 NPT	0.87	5.91	5.91	5.91
1 1/2	40	5.00	3.88	4	0.62	8.35	8.35	8.35	0.63	6.50	-	-	-	-	1.912	1.894	1.375	7.24	1.89	1.370	7.24	7.24	11/2-111/2 NPT	0.98	6.42	6.42	6.42
2	50	6.00	4.75	4	0.75	9.21	9.21	9.21	0.63	7.34	-	-	-	-	2.387	2.369	1.500	8.23	2.36	1.500	8.23	8.23	2-111/2 NPT	1.10	7.76	7.76	7.76
2 1/2	65	7.00	5.50	4	0.75	10.20	10.12	10.08	0.71	10.06	-	-	-	-	2.889	2.868	1.750	9.45	2.88	1.752	9.37	9.33	21/2-8 NPT	1.26	8.46	8.39	8.35
3	80	7.50	6.00	4	0.75	12.05	12.01	11.89	0.71	10.06	-	-	-	-	3.516	3.492	1.875	11.14	3.48	1.874	11.10	10.98	3-8 NPT	1.38	10.43	10.39	10.28
4	100	9.00	7.50	8	0.75	14.72	14.72	14.53	0.71	12.01	4.518	4.491	2.000	13.86	-	-	-	-	4.48	2.252	14.37	14.13	4-8 NPT	1.77	14.25	14.25	14.06

AUTOMATIC | PNEUMATIC | TYPE TA | DOUBLE ACTING | AIR TO OPEN | AIR TO CLOSE

BALL VALVE TYPE 21, 21α

TYPE——A21K, A2AK

CONNECTION / FLANGED, SOCKET, THREADED——JIS, DIN, ANSI SPIGOT——DIN

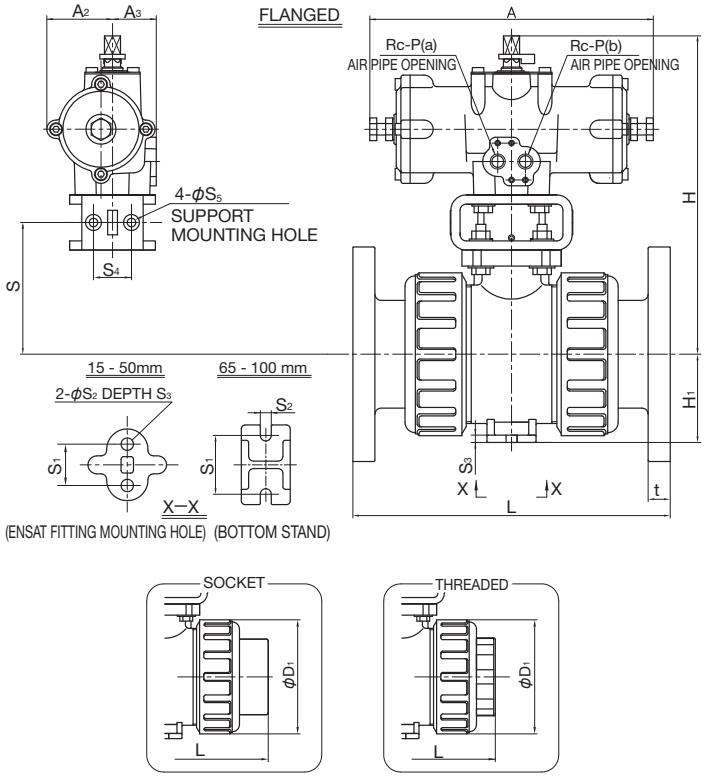

ACTUATOR SELECTION CHART

SIZE	ACTUATOR TYPE
15mm (1/2inch)	TA2A-0402D
20mm (3/4inch)	
25mm (1inch)	
32mm (1 1/4inch)	
40mm (1 1/2inch)	TA2A-050D
50mm (2inch)	
65mm (2 1/2inch)	TA2A-063D
80mm (3inch)	
100mm (4inch)	TA2A-080D

For detailed specifications, see P.124

■ JIS, DIN (Unit: mm)

mm	D1	H	H1	A	A2	A3	S	S1	S2	S3	S4	S5	P
15	48	159.5	29	110	25	32	-	19	7.3	11	-	-	1/8
20	60	166	35	110	25	32	-	19	7.3	11	-	-	1/8
25	70	173	39	110	25	32	-	19	7.3	11	-	-	1/8
32	82	182	47	110	25	32	-	30	9	15	-	-	1/8
40	100	224	55	210	46	46	-	30	9	15	-	-	1/4
50	126	235.5	66	210	46	46	-	30	9	15	-	-	1/4
65	133	268	72	250	57	38	107.5	48	9	6	32	7	1/4
80	152	277	85	250	57	38	116.5	55	11	7	32	7	1/4
100	210	348	110	292	71	45	151.5	65	11	8	42	9	1/4

mm	JIS									DIN									
	FLANGED JIS5K, JIS10K				SOCKET		THREADED			FLANGED DIN PN10/PN16				SOCKET			THREADED			SPIGOT		
	L			t	L		L			L			t	L			L			L		
	U-PVC C-PVC	PP	PVDF		U-PVC C-PVC	PP	U-PVC C-PVC	PP	PVDF	U-PVC C-PVC	PP	PVDF		U-PVC C-PVC	PP	PVDF	U-PVC C-PVC	PP	PVDF	U-PVC	PP	PVDF
15	143	143	143	12	109	108	102	100	100	130	130	130	12	109	99	99	102	100	100	124	124	124
20	172	172	172	14	128	126	120	119	119	150	150	150	14	128	113	113	120	119	119	144	144	144
25	187	187	187	14	145	141	131	130	130	160	160	160	14	145	123	123	131	130	130	154	154	154
32	190	190	190	16	162	-	150	146	146	180	180	180	16	162	139	139	150	146	146	174	174	174
40	212	212	212	16	189	171	163	160	160	200	200	200	16	189	149	149	163	160	160	194	194	194
50	234	234	234	16	220	192	197	194	194	230	230	230	16	220	176	176	197	194	194	224	224	224
65	261	257	256	18	273	219	215	213	212	290	288	287	18	273	205	204	215	213	212	285	245	244
80	306	305	302	18	316	257	265	264	261	312	311	308	21	316	252	249	265	264	261	299	296	293
100	374	374	369	18	419	341	362	362	357	352	352	347	18	419	312	307	340	340	335	358	355	350

■ ANSI (Unit: inch)

inch	mm	D1	H	H1	A	A2	A3	S	S1	S2	S3	S4	S5	P	ANSI								
															FLANGED ANSI CLASS150				SOCKET			THREADED		
															L			t	L			L		
															U-PVC C-PVC	PP	PVDF		U-PVC C-PVC	PP	PVDF	U-PVC C-PVC	PP	PVDF
1/2	15	1.89	6.28	1.14	4.33	0.98	1.26	-	0.75	0.29	0.43	-	-	1/8	5.63	5.63	5.63	0.47	4.45	4.45	4.45	4.02	4.02	4.02
3/4	20	2.36	6.54	1.38	4.33	0.98	1.26	-	0.75	0.29	0.43	-	-	1/8	6.77	6.77	6.77	0.55	5.08	5.08	5.08	4.72	4.72	4.72
1	25	2.76	6.81	1.54	4.33	0.98	1.26	-	0.75	0.29	0.43	-	-	1/8	7.36	7.36	7.36	0.55	5.75	5.75	5.75	5.16	5.16	5.16
1 1/4	32	3.23	7.17	1.85	4.33	0.98	1.26	-	1.18	0.35	0.59	-	-	1/8	7.48	7.48	7.48	0.63	6.46	6.46	6.46	5.91	5.91	5.91
1 1/2	40	3.94	8.82	2.17	8.27	1.81	1.81	-	1.18	0.35	0.59	-	-	1/4	8.35	8.35	8.35	0.63	7.24	7.24	7.24	6.42	6.42	6.42
2	50	4.96	9.27	2.60	8.27	1.81	1.81	-	1.18	0.35	0.59	-	-	1/4	9.21	9.21	9.21	0.63	8.23	8.23	8.23	7.76	7.76	7.76
2 1/2	65	5.24	10.55	2.83	9.84	2.24	1.50	4.23	1.89	0.35	0.24	1.26	0.28	1/4	10.20	10.12	10.08	0.71	9.45	9.37	9.33	8.46	8.39	8.35
3	80	5.98	10.91	3.35	9.84	2.24	1.50	4.59	2.17	0.43	0.28	1.26	0.28	1/4	12.05	12.01	11.89	0.71	11.14	11.10	10.98	10.43	10.39	10.28
4	100	8.27	13.70	4.33	11.50	2.83	1.77	5.96	2.56	0.43	0.31	1.65	0.35	1/4	14.72	14.72	14.53	0.71	13.86	14.37	14.13	14.25	14.25	14.06

AUTOMATIC | PNEUMATIC | TYPE TA | DOUBLE ACTING | AIR TO OPEN | AIR TO CLOSE

BALL VALVE TYPE 21, 21α

TYPE——A21K, A2AK
CONNECTION / FLANGED, SOCKET, THREADED——JIS, DIN, ANSI SPIGOT——DIN

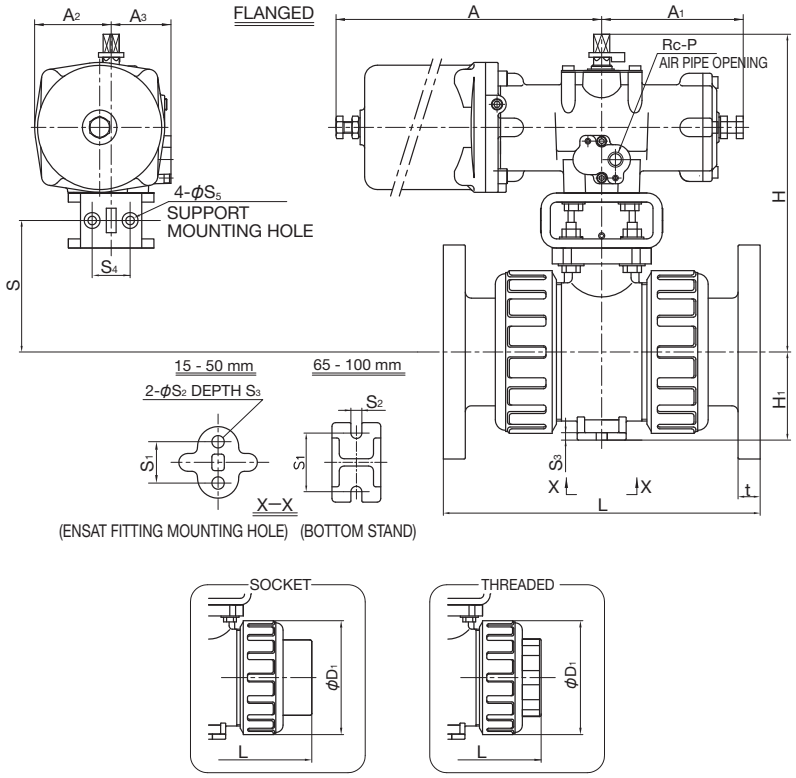

ACTUATOR SELECTION CHART

SIZE	ACTUATOR TYPE
15mm (1/2inch)	TA2A-0402R
20mm (3/4inch)	
25mm (1inch)	
32mm (1 1/4inch)	
40mm (1 1/2inch)	TA2A-050R
50mm (2inch)	
65mm (2 1/2inch)	TA2A-063R
80mm (3inch)	
100mm (4inch)	TA2A-080R

For detailed specifications, see P.124

■ JIS, DIN (Unit: mm)

mm	D1	H	H1	A	A1	A2	A3	S	S1	S2	S3	S4	S5	P
15	48	159.5	29	194	55	46	46	-	19	7.3	11	-	-	1/4
20	60	166	35	194	55	46	46	-	19	7.3	11	-	-	1/4
25	70	173	39	194	55	46	46	-	19	7.3	11	-	-	1/4
32	82	182	47	194	55	46	46	-	30	9	15	-	-	1/4
40	100	224	55	240	105	53	50	-	30	9	15	-	-	1/4
50	126	235.5	66	240	105	53	50	-	30	9	15	-	-	1/4
65	133	268	72	288	125	67	52	107.5	48	9	6	32	7	1/4
80	152	277	85	288	125	67	52	116.5	55	11	7	32	7	1/4
100	210	348	110	341	146	82.5	59	151.5	65	11	8	42	9	1/4

mm	JIS									DIN												
	FLANGED JIS5K, JIS10K				SOCKET		THREADED			FLANGED DIN PN10/PN16				SOCKET			THREADED			SPIGOT		
	L			t	L		L			L			t	L			L			L		
	U-PVC C-PVC	PP	PVDF		U-PVC C-PVC	PP	U-PVC C-PVC	PP	PVDF	U-PVC C-PVC	PP	PVDF		U-PVC C-PVC	PP	PVDF	U-PVC C-PVC	PP	PVDF	U-PVC	PP	PVDF
10	-	-	-	-	-	-	-	-	-	120	119	119	12	99	96	96	99	98	98	114	114	114
15	143	143	143	12	109	108	102	100	100	130	130	130	12	102	99	99	102	100	100	124	124	124
20	172	172	172	14	128	126	120	119	119	150	150	150	14	119	113	113	120	119	119	144	144	144
25	187	187	187	14	145	141	131	130	130	160	160	160	14	131	123	123	131	130	130	154	154	154
32	190	190	190	16	162	-	150	146	146	180	180	180	16	150	139	139	150	146	146	174	174	174
40	212	212	212	16	189	171	163	160	160	200	200	200	16	164	149	149	163	160	160	194	194	194
50	234	234	234	16	220	192	197	194	194	230	230	230	16	197	176	176	197	194	194	224	224	224
65	261	257	256	18	273	219	215	213	212	290	288	287	18	233	205	204	215	213	212	285	245	244
80	306	305	302	18	316	257	265	264	261	312	311	308	21	284	252	249	265	264	261	299	296	293
100	374	374	369	18	419	341	362	362	357	352	352	347	18	351	312	307	340	340	335	358	355	350

■ ANSI (Unit: inch)

inch	mm	D1	H	H1	A	A1	A2	A3	S	S1	S2	S3	S4	S5	P	ANSI									
																FLANGED ANSI CLASS150				SOCKET			THREADED		
																L				L			L		
																U-PVC C-PVC	PP	PVDF	t	U-PVC C-PVC	PP	PVDF	U-PVC C-PVC	PP	PVDF
1/2	15	1.89	6.28	1.14	7.64	2.17	1.81	1.81	-	0.75	0.29	0.43	-	-	1/4	5.63	5.63	5.63	0.47	4.45	4.45	4.45	4.02	4.02	4.02
3/4	20	2.36	6.54	1.38	7.64	2.17	1.81	1.81	-	0.75	0.29	0.43	-	-	1/4	6.77	6.77	6.77	0.55	5.08	5.08	5.08	4.72	4.72	4.72
1	25	2.76	6.81	1.54	7.64	2.17	1.81	1.81	-	0.75	0.29	0.43	-	-	1/4	7.36	7.36	7.36	0.55	5.75	5.75	5.75	5.16	5.16	5.16
1 1/4	32	3.23	7.17	1.85	7.64	2.17	1.81	1.81	-	1.18	0.35	0.59	-	-	1/4	7.48	7.48	7.48	0.63	6.46	6.46	6.46	5.91	5.91	5.91
1 1/2	40	3.94	8.82	2.17	9.45	4.13	2.09	1.97	-	1.18	0.35	0.59	-	-	1/4	8.35	8.35	8.35	0.63	7.24	7.24	7.24	6.42	6.42	6.42
2	50	4.96	9.27	2.60	9.45	4.13	2.09	1.97	-	1.18	0.35	0.59	-	-	1/4	9.21	9.21	9.21	0.63	8.23	8.23	8.23	7.76	7.76	7.76
2 1/2	65	5.24	10.55	2.83	11.34	4.92	2.64	2.05	4.23	1.89	0.35	0.24	1.26	0.28	1/4	10.20	10.12	10.08	0.71	9.45	9.37	9.33	8.46	8.39	8.35
3	80	5.98	10.91	3.35	11.34	4.92	2.64	2.05	4.59	2.17	0.43	0.28	1.26	0.28	1/4	12.05	12.01	11.89	0.71	11.14	11.10	10.98	10.43	10.39	10.28
4	100	8.27	13.70	4.33	13.43	5.75	3.25	2.32	5.96	2.56	0.43	0.31	1.65	0.35	1/4	14.72	14.72	14.53	0.71	13.86	14.37	14.13	14.25	14.25	14.06

AUTOMATIC | PNEUMATIC | TYPE AA | DOUBLE ACTING | AIR TO OPEN | AIR TO CLOSE

BALL VALVE TYPE 21, 21α

TYPE——A21A, A2AA

CONNECTION / FLANGED, SOCKET, THREADED——JIS, DIN, ANSI SPIGOT——DIN

FLANGED

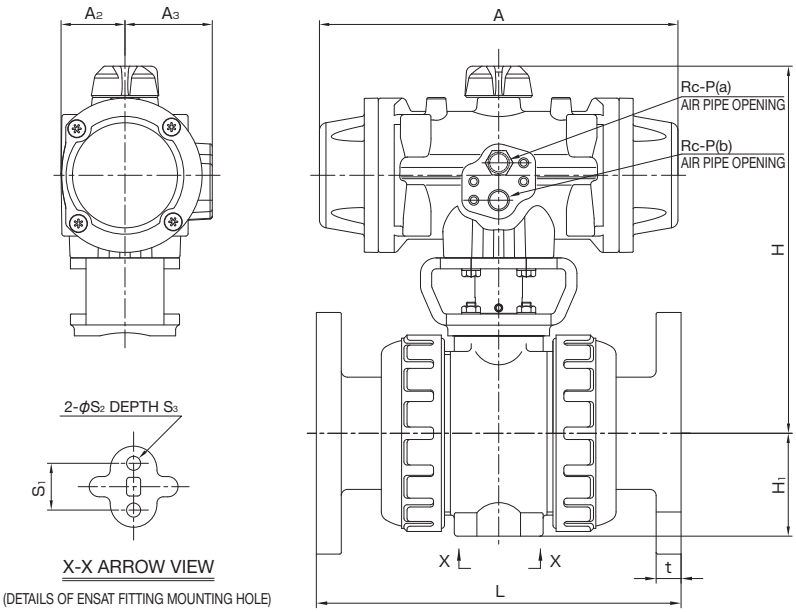

ACTUATOR SELECTION CHART

SIZE	ACTUATOR TYPE
15mm (1/2inch)	PPW
20mm (3/4inch)	
25mm (1inch)	
32mm (1 1/4inch)	
40mm (1 1/2inch)	PP00
50mm (2inch)	

For detailed specifications, see P.123

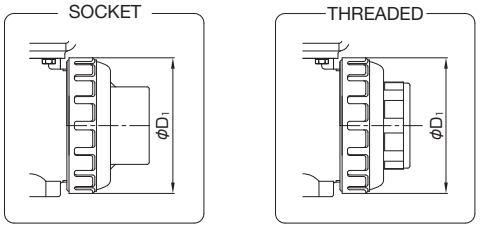

■ JIS, DIN (Unit: mm)

											JIS						DIN							
											FLANGED JIS5K, JIS10K		SOCKET		THREADED		FLANGED DIN PN10/PN16		SOCKET		THREADED		SPIGOT
											L		L		L		L		L		L		L
mm	D1	H	A	A2	A3	H1	S1	S2	S3	P	U-PVC, C-PVC PP, PVDF	t	U-PVC C-PVC	PP	U-PVC C-PVC	PP PVDF	U-PVC, C-PVC PP, PVDF	t	U-PVC C-PVC	PP PVDF	U-PVC C-PVC	PP PVDF	U-PVC PP, PVDF
15	48	159	144	28	42	29	19	7.3	11	1/4	143	12	109	108	102	100	130	12	102	99	102	100	124
20	60	165.5	144	28	42	35	19	7.3	11	1/4	172	14	128	126	120	119	150	14	119	113	120	119	144
25	70	172.5	144	28	42	39	19	7.3	11	1/4	187	14	145	141	131	130	160	14	131	123	131	130	154
32	82	181.5	144	28	42	47	30	9	15	1/4	190	16	162	-	150	146	180	16	150	139	150	146	174
40	100	203	157	31	48	55	30	9	15	1/4	212	16	189	171	163	160	200	16	164	149	163	160	194
50	126	214.5	157	31	48	66	30	9	15	1/4	234	16	220	192	197	194	230	16	197	176	197	194	224

■ ANSI (Unit: inch)

											ANSI			
											FLANGED ANSI CLASS150		SOCKET	THREADED
											L		L	L
inch	mm	D1	H	A	A2	A3	S	S1	S2	S3	P	U-PVC, C-PVC PP, PVDF	t	U-PVC, C-PVC PP, PVDF	U-PVC, C-PVC PP, PVDF
1/2	15	1.89	6.26	5.67	1.10	1.65	1.14	0.75	0.29	0.43	1/4	5.63	0.47	4.45	4.02
3/4	20	2.36	6.52	5.67	1.10	1.65	1.38	0.75	0.29	0.43	1/4	6.77	0.55	5.08	4.72
1	25	2.76	6.79	5.67	1.10	1.65	1.54	0.75	0.29	0.43	1/4	7.36	0.55	5.75	5.16
1 1/4	32	3.23	7.15	5.67	1.10	1.65	1.85	1.18	0.35	0.59	1/4	7.48	0.63	6.46	5.91
1 1/2	40	3.94	7.99	6.18	1.22	1.89	2.17	1.18	0.35	0.59	1/4	8.35	0.63	7.24	6.42
2	50	4.96	8.44	6.18	1.22	1.89	2.60	1.18	0.35	0.59	1/4	9.21	0.63	8.23	7.76

AUTOMATIC PNEUMATIC TYPE AA DOUBLE ACTING AIR TO OPEN AIR TO CLOSE

BALL VALVE TYPE 21, 21α

TYPE——A21A, A2AA
CONNECTION / FLANGED, SOCKET, THREADED——JIS, DIN, ANSI SPIGOT——DIN

FLANGED

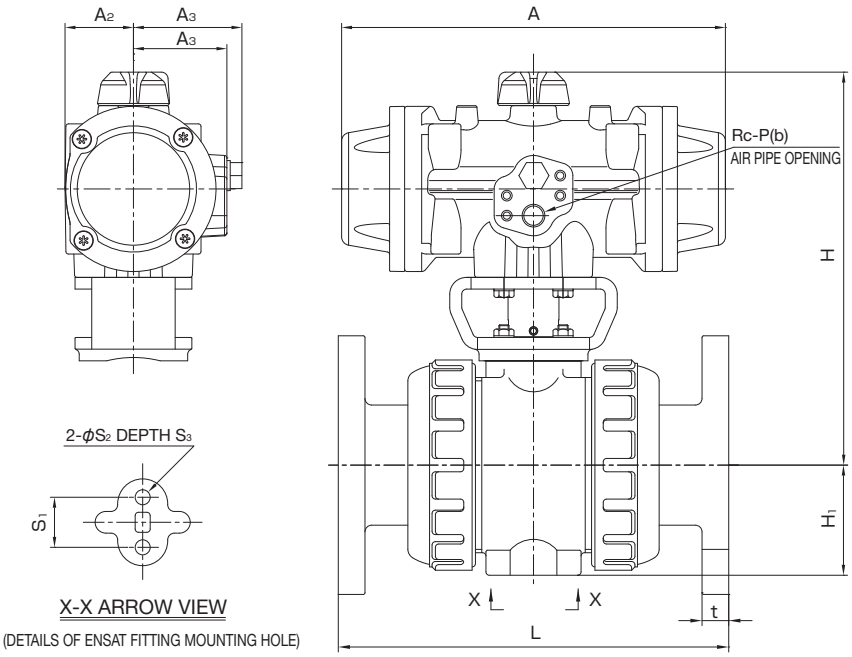

ACTUATOR SELECTION CHART

SIZE	ACTUATOR TYPE
15mm (1/2inch)	PP00S
20mm (3/4inch)	
25mm (1inch)	
32mm (1 1/4inch)	
40mm (1 1/2inch)	PP10S
50mm (2inch)	

For detailed specifications, see P.123

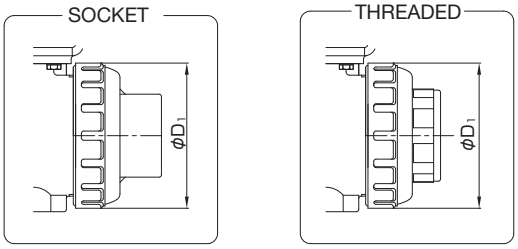

■ JIS, DIN (Unit: mm)

												JIS						DIN						
												FLANGED JIS5K, JIS10K		SOCKET		THREADED		FLANGED DIN PN10/PN16		SOCKET		THREADED		SPIGOT
												L		L		L		L		L		L		L
mm	D1	H	A	A2	A3	A3'	H1	S1	S2	S3	P	U-PVC, C-PVC PP, PVDF	t	U-PVC C-PVC	PP	U-PVC C-PVC	PP PVDF	U-PVC, C-PVC PP, PVDF	t	U-PVC C-PVC	PP PVDF	U-PVC C-PVC	PP PVDF	U-PVC PP, PVDF
15	48	172	157	31	48	57	29	19	7.3	11	1/4	143	12	109	108	102	100	130	12	102	99	102	100	124
20	60	178.5	157	31	48	57	35	19	7.3	11	1/4	172	14	128	126	120	119	150	14	119	113	120	119	144
25	70	185.5	157	31	48	57	39	19	7.3	11	1/4	187	14	145	141	131	130	160	14	131	123	131	130	154
32	82	194.5	157	31	48	57	47	30	9	15	1/4	190	16	162	-	150	146	180	16	150	139	150	146	174
40	100	224	230	41	56	65	55	30	9	15	1/4	212	16	189	171	163	160	200	16	164	149	163	160	194
50	126	235.5	230	41	56	65	66	30	9	15	1/4	234	16	220	192	197	194	230	16	197	176	197	194	224

■ ANSI (Unit: inch)

												ANSI			
												FLANGED ANSI CLASS150		SOCKET	THREADED
												L		L	L
inch	mm	D1	H	A	A2	A3	A3'	H1	S1	S2	S3	P	U-PVC, C-PVC PP, PVDF	t	U-PVC, C-PVC PP, PVDF	U-PVC, C-PVC PP, PVDF
1/2	15	1.89	6.77	6.18	1.22	1.89	2.24	1.14	0.75	0.29	0.43	1/4	5.63	0.47	4.45	4.02
3/4	20	2.36	7.03	6.18	1.22	1.89	2.24	1.38	0.75	0.29	0.43	1/4	6.77	0.55	5.08	4.72
1	25	2.76	7.30	6.18	1.22	1.89	2.24	1.54	0.75	0.29	0.43	1/4	7.36	0.55	5.75	5.16
1 1/4	32	3.23	7.66	6.18	1.22	1.89	2.24	1.85	1.18	0.35	0.59	1/4	7.48	0.63	6.46	5.91
1 1/2	40	3.94	8.82	9.06	1.61	2.20	2.56	2.17	1.18	0.35	0.59	1/4	8.35	0.63	7.24	6.42
2	50	4.96	9.27	9.06	1.61	2.20	2.56	2.60	1.18	0.35	0.59	1/4	9.21	0.63	8.23	7.76

AUTOMATIC | PNEUMATIC | TYPE AA | DOUBLE ACTING | AIR TO OPEN | AIR TO CLOSE

BALL VALVE TYPE 21, 21α

TYPE——A21A, A2AA

CONNECTION / FLANGED, SOCKET, THREADED——JIS, DIN, ANSI SPIGOT——DIN

FLANGED

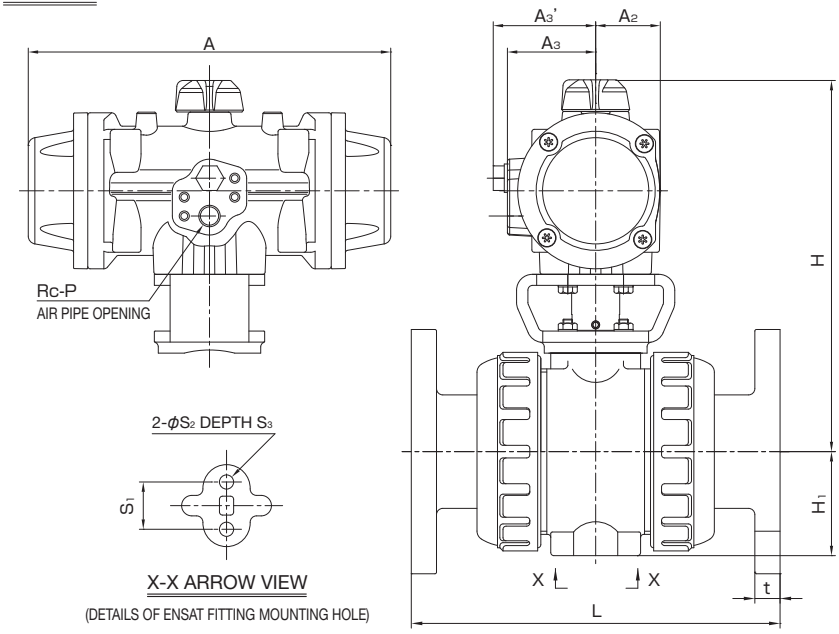

X-X ARROW VIEW

(DETAILS OF ENSAT FITTING MOUNTING HOLE)

ACTUATOR SELECTION CHART

SIZE	ACTUATOR TYPE
15mm (1/2inch)	PP00S
20mm (3/4inch)	
25mm (1inch)	
32mm (1 1/4inch)	
40mm (1 1/2inch)	PP10S
50mm (2inch)	

For detailed specifications, see P.123

SOCKET

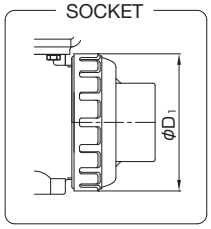

THREADED

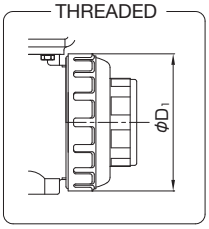

■ JIS, DIN (Unit: mm)

												JIS						DIN						
												FLANGED JIS5K, JIS10K		SOCKET		THREADED		FLANGED DIN PN10/PN16		SOCKET		THREADED		SPIGOT
												L		L		L		L		L		L		L
mm	D1	H	A	A2	A3	A3'	H1	S1	S2	S3	P	U-PVC, C-PVC PP, PVDF	t	U-PVC C-PVC	PP	U-PVC C-PVC	PP PVDF	U-PVC, C-PVC PP, PVDF	t	U-PVC C-PVC	PP PVDF	U-PVC C-PVC	PP PVDF	U-PVC PP, PVDF
15	48	172	157	31	48	57	29	19	7.3	11	1/4	143	12	109	108	102	100	130	12	102	99	102	100	124
20	60	178.5	157	31	48	57	35	19	7.3	11	1/4	172	14	128	126	120	119	150	14	119	113	120	119	144
25	70	185.5	157	31	48	57	39	19	7.3	11	1/4	187	14	145	141	131	130	160	14	131	123	131	130	154
32	82	194.5	157	31	48	57	47	30	9	15	1/4	190	16	162	-	150	146	180	16	150	139	150	146	174
40	100	224	230	41	56	65	55	30	9	15	1/4	212	16	189	171	163	160	200	16	164	149	163	160	194
50	126	235.5	230	41	56	65	66	30	9	15	1/4	234	16	220	192	197	194	230	16	197	176	197	194	224

■ ANSI (Unit: inch)

												ANSI			
												FLANGED ANSI CLASS150		SOCKET	THREADED
												L		L	L
inch	mm	D1	H	A	A2	A3	A3'	H1	S1	S2	S3	P	U-PVC, C-PVC PP, PVDF	t	U-PVC, C-PVC PP, PVDF	U-PVC, C-PVC PP, PVDF
1/2	15	1.89	6.77	6.18	1.22	1.89	2.24	1.14	0.75	0.29	0.43	1/4	5.63	0.47	4.45	4.02
3/4	20	2.36	7.03	6.18	1.22	1.89	2.24	1.38	0.75	0.29	0.43	1/4	6.77	0.55	5.08	4.72
1	25	2.76	7.30	6.18	1.22	1.89	2.24	1.54	0.75	0.29	0.43	1/4	7.36	0.55	5.75	5.16
1 1/4	32	3.23	7.66	6.18	1.22	1.89	2.24	1.85	1.18	0.35	0.59	1/4	7.48	0.63	6.46	5.91
1 1/2	40	3.94	8.82	9.06	1.61	2.20	2.56	2.17	1.18	0.35	0.59	1/4	8.35	0.63	7.24	6.42
2	50	4.96	9.27	9.06	1.61	2.20	2.56	2.60	1.18	0.35	0.59	1/4	9.21	0.63	8.23	7.76

AUTOMATIC ELECTRIC TYPE T Single-Phase 100V • Single-Phase 200V

BALL VALVE TYPE 21, 21α

TYPE——A21T, A2AT
CONNECTION / FLANGED, SOCKET, THREADED——JIS, DIN, ANSI SPIGOT——DIN

FLANGED

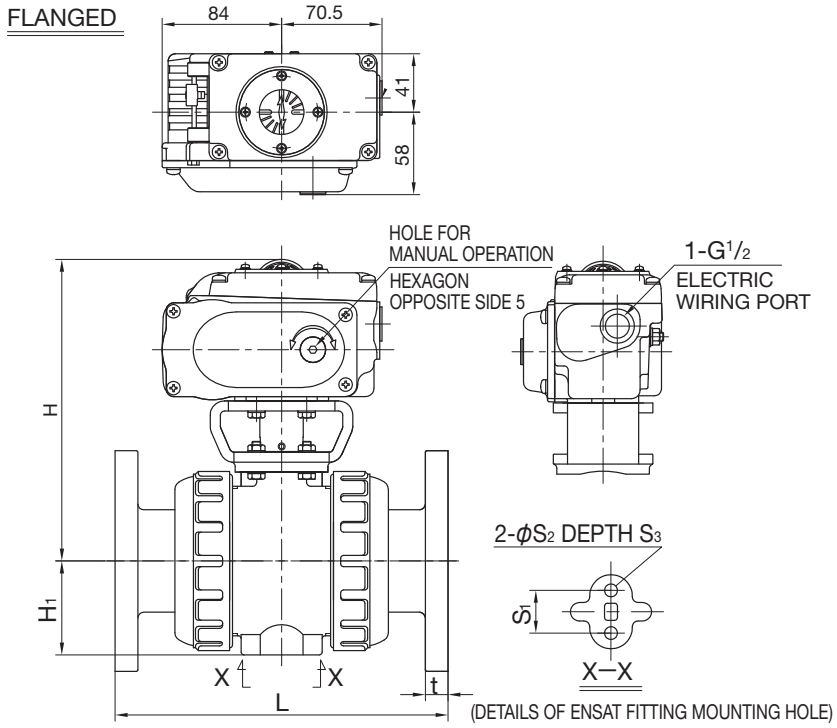

ACTUATOR SELECTION CHART

SIZE	ACTUATOR TYPE
15mm (1/2inch)	T-00
20mm (3/4inch)	
25mm (1inch)	
32mm (1 1/4inch)	
40mm (1 1/2inch)	
50mm (2inch)	

For detailed specifications, see P.139

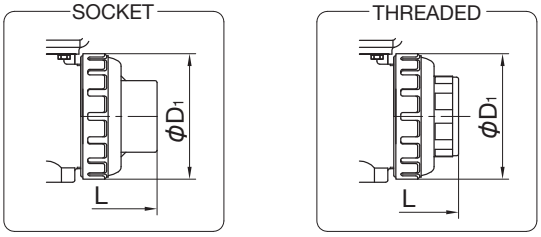

■ JIS, DIN (Unit: mm)

							JIS						DIN						
							FLANGED JIS5K, JIS10K		SOCKET		THREADED		FLANGED DIN PN10/PN16		SOCKET		THREADED		SPIGOT
							L		L		L		L		L		L		L
mm	D1	H	H1	S1	S2	S3	U-PVC, C-PVC PP, PVDF	t	U-PVC C-PVC	PP	U-PVC C-PVC	PP PVDF	U-PVC, C-PVC PP, PVDF	t	U-PVC C-PVC	PP PVDF	U-PVC C-PVC	PP PVDF	U-PVC PP, PVDF
15	48	169.5	29	19	7.3	11	143	12	109	108	102	100	130	12	102	99	102	100	124
20	60	176	35	19	7.3	11	172	14	128	126	120	119	150	14	119	113	120	119	144
25	70	183	39	19	7.3	11	187	14	145	141	131	130	160	14	131	123	131	130	154
32	82	192	47	30	9	15	190	16	162	-	150	146	180	16	150	139	150	146	174
40	100	200.5	55	30	9	15	212	16	189	171	163	160	200	16	164	149	163	160	194
50	126	212	66	30	9	15	234	16	220	192	197	194	230	16	197	176	197	194	224

■ ANSI (Unit: inch)

							ANSI			
							FLANGED ANSI CLASS150		SOCKET	THREADED
							L		L	L
inch	mm	D1	H	H1	S1	S2	S3	U-PVC, C-PVC PP, PVDF	t	U-PVC, C-PVC PP, PVDF	U-PVC, C-PVC PP, PVDF
1/2	15	1.96	6.67	1.14	0.75	0.29	0.43	5.63	0.47	4.45	4.02
3/4	20	2.45	6.93	1.38	0.75	0.29	0.43	6.77	0.55	5.08	4.72
1	25	2.86	7.20	1.54	0.75	0.29	0.43	7.36	0.55	5.75	5.16
1 1/4	32	4.08	7.56	1.85	1.18	0.35	0.59	7.48	0.63	6.46	5.91
1 1/2	40	4.08	7.89	2.17	1.18	0.35	0.59	8.35	0.63	7.24	6.42
2	50	5.14	8.35	2.60	1.18	0.35	0.59	9.21	0.63	8.23	7.76

AUTOMATIC ELECTRIC TYPE T Single-Phase 100V • Single-Phase 200V

BALL VALVE TYPE 21, 21α

TYPE——A21T

CONNECTION / FLANGED, SOCKET, THREADED——JIS, DIN, ANSI SPIGOT——DIN

FLANGED

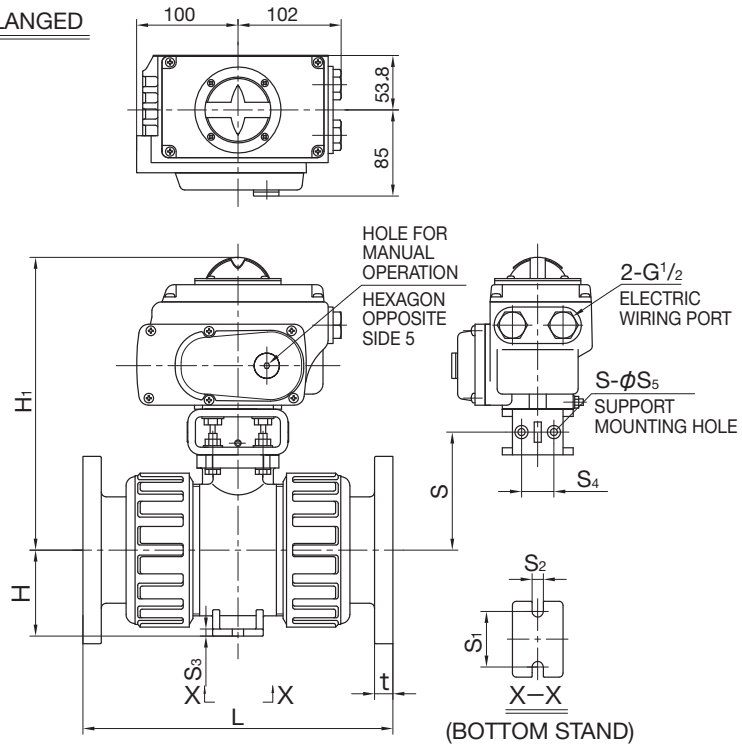

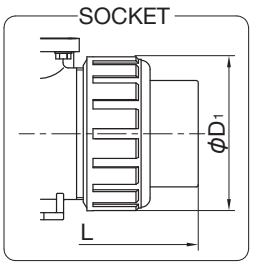

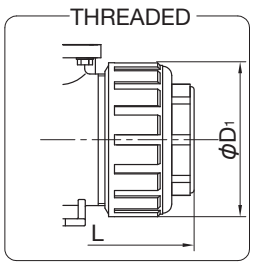

ACTUATOR SELECTION CHART

SIZE	ACTUATOR TYPE
65mm (2 1/2inch)	T-0
80mm (3inch)	
100mm (4inch)	

For detailed specifications, see P.139

■ JIS, DIN (Unit: mm)

mm	D1	H	H1	S	S1	S2	S3	JIS FLANGED JIS5K, JIS10K L U-PVC C-PVC	JIS FLANGED JIS5K, JIS10K L PP	JIS FLANGED JIS5K, JIS10K L PVDF	JIS t	JIS SOCKET L U-PVC C-PVC	JIS SOCKET L PP	JIS THREADED L U-PVC C-PVC	JIS THREADED L PP	JIS THREADED L PVDF	DIN FLANGED DIN PN10/PN16 L U-PVC C-PVC	DIN FLANGED DIN PN10/PN16 L PP	DIN FLANGED DIN PN10/PN16 L PVDF	DIN t	DIN SOCKET L U-PVC C-PVC	DIN SOCKET L PP	DIN SOCKET L PVDF	DIN THREADED L U-PVC C-PVC	DIN THREADED L PP	DIN THREADED L PVDF	DIN SPIGOT L U-PVC	DIN SPIGOT L PP	DIN SPIGOT L PVDF
65	133	280	72	107.5	48	9	6	261	257	256	18	273	219	215	213	212	290	288	287	18	233	205	204	215	213	212	285	245	244
80	152	289	85	116.5	55	11	7	306	305	302	18	316	257	265	264	261	312	311	308	21	284	252	249	265	264	261	299	296	293
100	210	327	110	151.5	65	11	8	374	374	369	18	419	341	362	362	357	352	352	347	18	351	312	307	340	340	335	358	355	350

■ ANSI (Unit: inch)

inch	mm	D1	H	H1	S	S1	S2	S3	ANSI FLANGED ANSI CLASS150 L U-PVC C-PVC	ANSI FLANGED ANSI CLASS150 L PP	ANSI FLANGED ANSI CLASS150 L PVDF	ANSI t	ANSI SOCKET L U-PVC C-PVC	ANSI SOCKET L PP	ANSI SOCKET L PVDF	ANSI THREADED L U-PVC C-PVC	ANSI THREADED L PP	ANSI THREADED L PVDF
2 1/2	65	5.43	11.02	2.83	4.23	1.89	0.35	0.24	10.20	10.12	10.08	0.71	9.45	9.37	9.33	8.46	8.39	8.35
3	80	6.20	11.38	3.35	4.59	2.17	0.43	0.28	12.05	12.01	11.89	0.71	11.14	11.10	10.98	10.43	10.39	10.28
4	100	8.57	12.87	4.33	5.96	2.56	0.43	0.31	14.72	14.72	14.53	0.71	13.86	14.37	14.13	14.25	14.25	14.06

WATER BALL VALVE (WATER ONLY)

- EQUIPPED WITH TOP FLANGE, ENABLING EASY CHANGE TO AUTOMATIC VALVE.
  (Change to an automatic valve requires an actuator set.)
- TYPE 21 FOR CHEMICAL SOLUTION LINES AND WATER BALL VALVE FOR WATER/SEA WATER LINES CAN BE SELECTIVELY USED, WHICH CONTRIBUTES TO TOTAL COST REDUCTION.

BASIC SPECIFICATIONS

VALVE TYPE——**WATER BALL VALVE**
SIZE——**15 mm—50 mm (1/2 inch—2 inch)**
BODY MATERIAL——**U-PVC**
SEAL MATERIAL / O-RING——**EPDM**
CONNECTION / SOCKET——**JIS**
THREADED——**Rc**
HIGH PURITY SERIES——**WETTED PARTS LUBRICANT FREE**

	FLUID TEMPERATURE	MAXIMUM WORKING PRESSURE (NORMAL TEMPERATURE) MPa{kgf/cm²}	CONNECTION METHOD	
			SOCKET	THREADED
U-PVC	0℃～ 50℃	1.0 {10.2}	○	○

NOTE (1) The water ball valves are dedicated for water/sea water lines. They cannot be used for chemical solution lines. (2) For chemical solution lines, use the ball valve type 21 or compact ball valve. (3) The face-to-face dimensions and parts are not compatible between the water ball valve and the ball valve type 21α. (4) Parts for the water ball valve are not sold separately. (5) For switching from a manual valve to an automatic valve, order an actuator set.

* Concerning the allowable pressure for each temperature and material, see the technical documents at the end of this catalog.

MANUAL



AUTOMATIC

PARTS LIST MANUAL

SOCKET

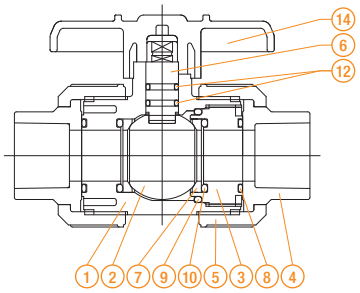

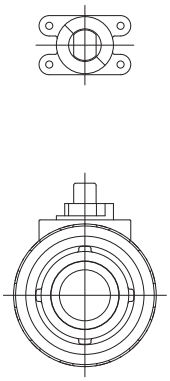

THREADED

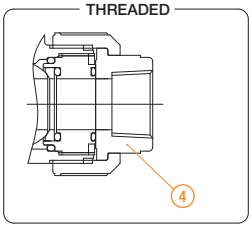

PART NO. / NAME	QTY	MATERIAL
1 BODY	1	U-PVC
2 BALL	1	U-PVC
3 UNION	1	U-PVC
4 END CONNECTOR	2	U-PVC
5 UNION NUT	2	U-PVC
6 STEM	1	U-PVC

PART NO. / NAME	QTY	MATERIAL
7 SEAT	2	PTFE
8 O-RING (A)	2	EPDM
9 O-RING (B)	1	EPDM
10 O-RING (C)	2	EPDM
12 O-RING (E)	2	EPDM
14 HANDLE	1	ABS

COMPATIBLE ACTUATOR AUTOMATIC

PNEUMATIC TYPE VC For detailed specifications, see P.125

ELECTRIC TYPE V For detailed specifications, see P.143

PRODUCT MODEL CODE LIST

MANUAL

ACTUATION	TYPE	OPERATING SYSTEM	BODY MATERIAL	SEAL MATERIAL	CONNECTION	STANDARD	SIZE	HIGH PURITY SERIES
V	WB	LV	U	E	*	J	***	2
V MANUAL VALVE	WB WATER BALL VALVE	LV LEVER TYPE	U U-PVC	E EPDM	S SOCKET N THREADED	J JIS	015 15mm ~ 050 50mm	2 WETTED PARTS LUBRICANT FREE

PRODUCT MODEL CODE LIST

AUTOMATIC

ACTUATION	TYPE	ACTUATOR TYPE	ACTION / POWER SOURCE	BODY MATERIAL	SEAL MATERIAL	CONNECTION	STANDARD	SIZE	HIGH PURITY SERIES
A	WB	*	*	U	E	*	*	***	2
A AUTOMATIC VALVE	WB WATER BALL VALVE	PNEUMATIC C TYPE VC ELECTRIC V TYPE V	PNEUMATIC F DOUBLE ACTING G AIR TO OPEN S AIR TO CLOSE ELECTRIC 1 Single-Phase 100V 2 Single-Phase 200V D DC24V	U U-PVC	E EPDM	S SOCKET N THREADED	J JIS	015 15mm ~ 050 50mm	2 WETTED PARTS LUBRICANT FREE

MANUAL

WATER BALL VALVE (WATER ONLY)

TYPE——VWBLV

CONNECTION / SOCKET, THREADED——JIS

SOCKET

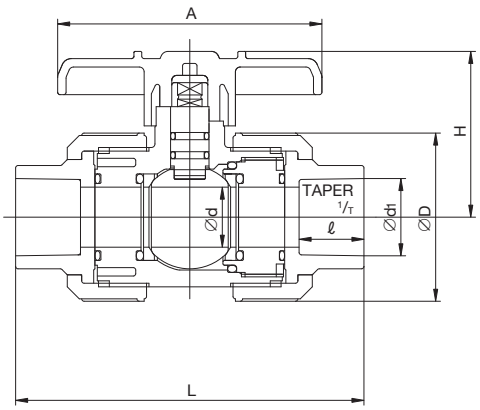

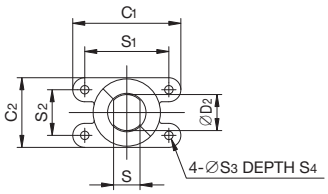

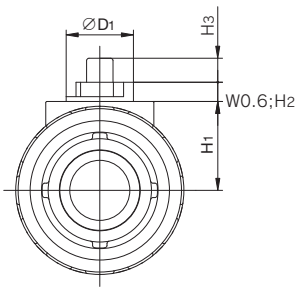

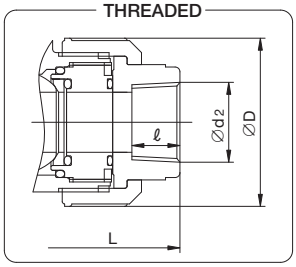

■ JIS (Unit: mm)

mm	d	D	D1	D2	H	H1	H2	H3	A	S	C1	C2	S1	S2	S3	S4	JIS SOCKET d1	JIS SOCKET ℓ	JIS SOCKET 1/T	JIS SOCKET L	JIS Threaded End d1	JIS Threaded End ℓ	JIS Threaded End L
15	15	48	24	13.5	54	25	6	7.5	92	10.5	40	25	31.5	15	3.5	12	22.11	20	1/34	104	Rc 1/2	15	98
20	20	60	27	15	62	31	8	10	100	11	45	29	35	19	3.5	12	26.13	24	1/34	128	Rc 3/4	17	119
25	25	70	28	15	69	38	8	10	100	11	45	29	35	19	3.5	12	32.16	27	1/34	145	Rc 1	20	135
32	30	80	34	19	79	43	10	10	121	15	58.5	38	45.5	25	4.5	15	38.19	30	1/34	162	Rc 1 1/4	22	150
40	40	96	38	23	88	50	10	12	131	18	58.5	38	45.5	25	4.5	15	48.21	37	1/37	189	Rc 1 1/2	25	170
50	51	120	40	23	102	56	12	12	159	18	60	40	47	27	4.5	15	60.25	42	1/37	220	Rc 2	28	198

AUTOMATIC PNEUMATIC TYPE VC DOUBLE ACTING AIR TO OPEN AIR TO CLOSE

WATER BALL VALVE

TYPE——AWBC
CONNECTION / SOCKET, THREADED——JIS

SOCKET

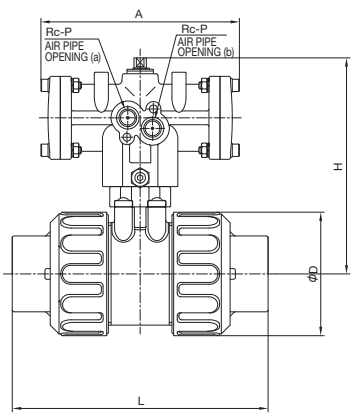

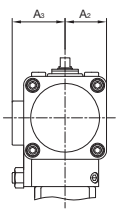

ACTUATOR SHAPE FOR PND-03S

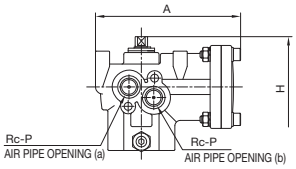

THREADED

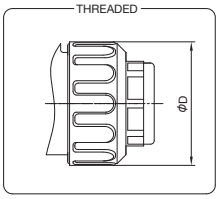

ACTUATOR SELECTION CHART

SIZE	ACTUATOR TYPE
15mm (1/2inch)	PND-03S
20mm (3/4inch)	
25mm (1inch)	PND-03D
32mm (1 1/4inch)	
40mm (1 1/2inch)	PND-04D
50mm (2inch)	

For detailed specifications, see P.125

■ JIS (Unit: mm)

mm	D	H	A	A2	A3	P	JIS SOCKET L	JIS THREADED L
15	48	96.5	83	24	30	1/8	104	98
20	60	107	83	24	30	1/8	128	119
25	70	122.5	113	24	30	1/8	145	135
32	80	145.5	113	24	30	1/8	162	150
40	96	169	132	31	36	1/8	189	170
50	120	177	132	31	36	1/8	220	198

AUTOMATIC PNEUMATIC TYPE VC DOUBLE ACTING AIR TO OPEN AIR TO CLOSE

WATER BALL VALVE

TYPE——AWBC
CONNECTION / SOCKET, THREADED——JIS

SOCKET

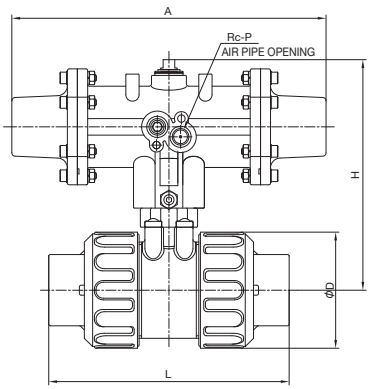

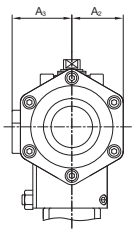

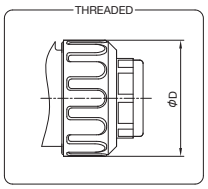

ACTUATOR SELECTION CHART

SIZE	ACTUATOR TYPE	
	AIR TO OPEN	AIR TO CLOSE
15mm (1/2inch)	PSO-03D	PSC-03D
20mm (3/4inch)		
25mm (1inch)	PSO-04D	PSC-04D
32mm (1 1/4inch)	PSO-04W	PSC-04W
40mm (1 1/2inch)		
50mm (2inch)		

For detailed specifications, see P.125

■ JIS (Unit: mm)

mm	D	H	A	A2	A3	P	JIS SOCKET L	JIS THREADED L
15	48	105	165	24	30	1/8	104	98
20	60	115.5	165	24	30	1/8	128	119
25	70	139	190	31	36	1/8	145	135
32	80	162	279	31	36	1/8	162	150
40	96	169	279	31	36	1/8	189	170
50	120	177	279	31	36	1/8	220	198

AUTOMATIC ELECTRIC TYPE V Single-Phase 100V • Single-Phase 200V • DC24V

WATER BALL VALVE

TYPE——AWBV
CONNECTION / SOCKET, THREADED——JIS

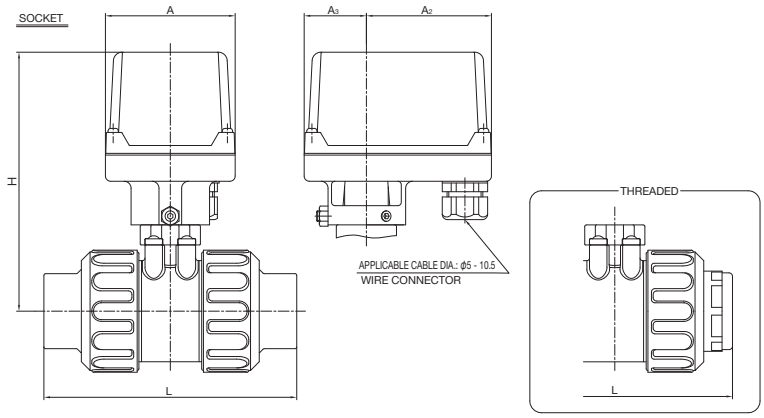

ACTUATOR SELECTION CHART

SIZE	ACTUATOR TYPE	
	AC100V AC200V	DC24V
15mm (1/2inch)	AM1-030	DM2-030
20mm (3/4inch)		
25mm (1inch)	AM1-070	DM2-070
32mm (1 1/4inch)	AM1-180	DM2-180
40mm (1 1/2inch)		
50mm (2inch)		

For detailed specifications, see P.143

■ JIS (Unit: mm)

mm	H	A	A_2	A_3	JIS SOCKET L	JIS THREADED L
15	131	74	71	36	104	98
20	141.5	74	71	36	128	119
25	148.5	74	71	36	145	135
32	213.5	74	54	53	162	150
40	220.5	74	54	53	189	170
50	228.5	74	54	53	220	198

3 WAY BALL VALVE TYPE 23

- ENABLES SWITCHING BETWEEN TWO FLOW PATHS AND COMPLETE CLOSING. (ONLY ONE VALVE IS NECESSARY IN A LINE CONVENTIONALLY REQUIRING TWO BALL VALVES.)
- THE SHAPE OF VALVE ELEMENT (BALL) IS SELECTABLE FROM THREE KINDS, ALLOWING FOR SWITCHING OF FLOW DIRECTION ACCORDING TO THE APPLICATION.

BASIC SPECIFICATIONS

VALVE TYPE——3 WAY BALL VALVE TYPE 23
SIZE——15 mm—100 mm (1/2 inch—4 inch)
BODY MATERIAL——U-PVC / C-PVC / PP / PVDF
SEAL MATERIAL / O-RING——EPDM / FKM etc.
CONNECTION / FLANGED——JIS5K, JIS10K, DIN PN10, ANSI CLASS150
SOCKET——JIS, DIN, ANSI
THREADED——Rc, Rp, NPT
PORT——DOUBLE L PORT, CROSS PORT, L PORT
HIGH PURITY SERIES——LUBRICANT FREE

	FLUID TEMPERATURE	MAXIMUM WORKING PRESSURE (NORMAL TEMPERATURE) MPa{kgf/cm²}	CONNECTION METHOD		
			FLANGED	SOCKET	THREADED
U-PVC	0℃～ 50℃	1.0 {10.2}	○	○	○
C-PVC	0℃～ 90℃	1.0 {10.2}	○	○	○
PP	-20℃～ 80℃	1.0 {10.2}	○	○	○
PVDF	-20℃～100℃	1.0 {10.2}	○	○	○

NOTE (1) The ball-type valves have dead spaces for structural reasons. Note that volatile liquids, such as hydrogen peroxide (H_2O_2) and sodium hypochlorite (NaClO), vaporize in those dead spaces, which may cause abnormal pressure increase in the valve. (When the internal pressure abnormally increases due to vaporization, the gas will be compressive fluid. If the valve breaks in this state, it will be very dangerous, causing explosion and scattering of fragments.) (2) The maximum working pressure is the value including the water hammer pressure. Be careful that the maximum working pressure is not exceeded during use.

* Concerning the allowable pressure for each temperature and material, see the technical documents at the end of this catalog.

MANUAL



AUTOMATIC



PARTS LIST MANUAL

FLANGED

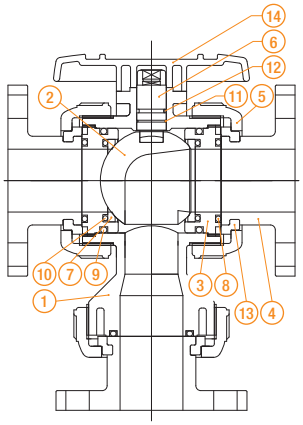

65 mm - 100 mm

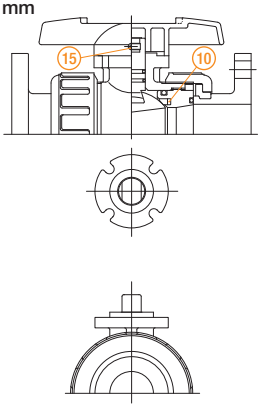

SOCKET

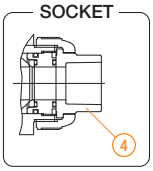

THREADED

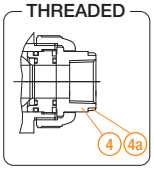

PART NO. / NAME	QTY	MATERIAL
1 BODY	1	U-PVC, C-PVC, PP, PVDF
2 BALL	1	U-PVC, C-PVC, PP, PVDF
3 UNION	2	U-PVC, C-PVC, PP, PVDF
4 END CONNECTOR	3	U-PVC, C-PVC, PP, PVDF
4a RING	3	SUS304 (Used for C-PVC 15-, 20-, or 25-mm threaded type)
5 UNION NUT	3	U-PVC, C-PVC, PP, PVDF

PART NO. / NAME	QTY	MATERIAL
6 STEM	1	U-PVC, C-PVC, PP, PVDF
7 SEAT	2	PTFE
8 O-RING (A)	3	EPDM, FKM, etc.
9 O-RING (B)	2	EPDM, FKM, etc.
10 O-RING (C)	2	EPDM, FKM, etc. (Used for 15 to 50 mm)
10 CUSHION	2	EPDM, FKM, etc. (Used for 65 - 100 mm)

PART NO. / NAME	QTY	MATERIAL
11 O-RING (D)	1	EPDM, FKM, etc.
12 O-RING (E)	1	EPDM, FKM, etc.
13 STOP RING	3	PVDF (Used for flanged type)
14 HANDLE	1	ABS
15 TAPPING SCREW (A)	1	SUS304 (Used for 65 to 100 mm)

COMPATIBLE ACTUATOR AUTOMATIC

PNEUMATIC TYPE TA — For detailed specifications, see P.124

ELECTRIC TYPE T — For detailed specifications, see P.139

FLOW DIRECTION DIAGRAM FOR EACH HANDLE ROTATION ANGLE MANUAL AUTOMATIC

For details of flow direction diagram, see P.058.

PRODUCT MODEL CODE LIST MANUAL

ACTUATION	TYPE	OPERATING SYSTEM	BODY MATERIAL	SEAL MATERIAL	CONNECTION	STANDARD	SIZE	HIGH PURITY SERIES
V	23	LV	*	*	*	*	***	1
V MANUAL VALVE	23 TYPE 23	LV LEVER TYPE	U U-PVC C C-PVC P PP F PVDF	E EPDM V FKM	S SOCKET N THREADED P SPIGOT F FLANGED	J JIS D DIN 1 JIS10K 5 JIS5K A ANSI	015 15mm ~ 100 100mm	1 LUBRICANT FREE

PRODUCT MODEL CODE LIST AUTOMATIC

ACTUATION	TYPE	ACTUATOR TYPE	ACTION / POWER SOURCE	BODY MATERIAL	SEAL MATERIAL	CONNECTION	STANDARD	SIZE	SPACE HEATER	HIGH PURITY SERIES
A	23	*	*	*	*	*	*	***	OC※	1
A AUTOMATIC VALVE	23 TYPE 23	PNEUMATIC K TYPE TA ELECTRIC T TYPE T	PNEUMATIC F DOUBLE ACTING G AIR TO OPEN S AIR TO CLOSE ELECTRIC 1 Single-Phase 100V 2 Single-Phase 200V	U U-PVC C C-PVC P PP F PVDF	E EPDM V FKM	S SOCKET N THREADED P SPIGOT F FLANGED	J JIS D DIN 1 JIS10K 5 JIS5K A ANSI	015 15mm ~ 100 100mm	OC OC * Indicate only for electric type only.	1 LUBRICANT FREE

FLOW DIRECTION DIAGRAM MANUAL AUTOMATIC

THE DIRECTION OF FLOW IS SELECTABLE ACCORDING TO THE APPLICATION.

THREE TYPES OF VALVE ELEMENT (BALL) ARE AVAILABLE: **"L PORT", "DOUBLE L PORT" AND "CROSS PORT".**
THE DIRECTION OF FLOW CAN BE SWITCHED ACCORDING TO THE APPLICATION.

	COMPATIBLE ACTUATION METHOD	ROTATION ANGLE 0°	45°	90°	135°	180°	BALL SHAPE
L PORT (90°or 180°)	MANUAL ○ ELECTRIC △						
DOUBLE L PORT (90°)	MANUAL △ PNEUMATIC ○ ELECTRIC ○		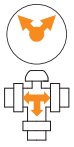				
CROSS PORT (90°or 180°) * For 15 - 50 mm only.	MANUAL △ PNEUMATIC △ ELECTRIC △						

○ indicates standard products. △ indicates optional products.

* Our products are vertical type. The double L port and cross port cannot completely stop the flow in three directions. * For automatic valves, the direction of flow is determined as follows according to the operation system:

Air to open: Right opens during air supply. | Air to close: Left opens during air supply. | Double acting: Right opens during air supply on Ⓞ side. Left opens during air supply on Ⓢ side.

* Also for the solenoid valve, the right side opens when energized and the left side opens when de-energized.

MANUAL

3 WAY BALL VALVE TYPE 23

TYPE——V23LV

CONNECTION / FLANGED, SOCKET, THREADED——JIS, DIN, ANSI SPIGOT——DIN

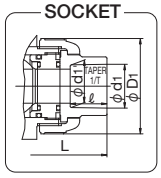

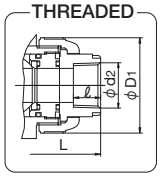

FLANGED

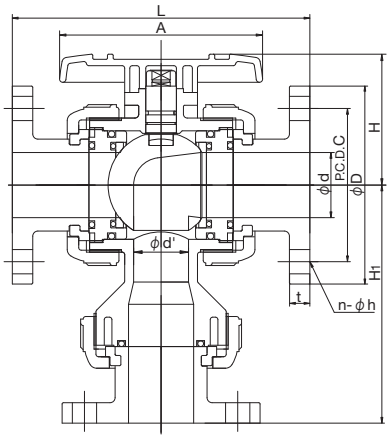

65 mm - 100 mm

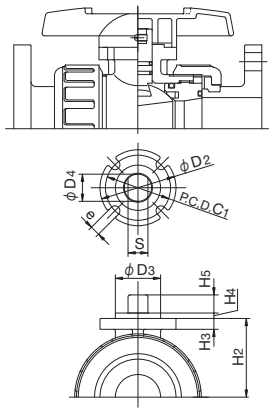

■ JIS, DIN (Unit: mm)

mm	d	d'	D1	D2	D3	D4	C1	H	H2	H3	H4	H5	A	S	e
15	15	15	48	42	25	13.5	36	51.5	30.0	6	3	8	92	10.5	5.5
20	20	20	60	42	25	15	36	59.5	36.5	6	3	10	100	11	5.5
25	25	25	70	42	25	15	36	68.0	43.5	6	3	10	110	11	5.5
32	40	32	100	57	35	23	50	89.0	61.0	10	3	12	131	18	6.5
40	40	32	100	57	35	23	50	89.0	61.0	10	3	12	131	18	6.5
50	51	43	126	57	35	23	50	102.5	72.5	10	3	12	159	18	6.5
65	78	58	152	81	55	30	70	140.0	94.0	13	3	19	240	24	9.0
80	78	58	152	81	55	30	70	140.0	94.0	13	3	19	240	24	9.0
100	100	78	210	116	70	40	102	178.0	126.0	16	3	23	300	34	11.0

JIS

mm	FLANGED										SOCKET										THREADED			
	JIS5K				JIS10K				L	t	H1	U-PVC, C-PVC					PP				d2	ℓ	L	H1
	D	C	n	h	D	C	n	h				d1	ℓ	1/T	L	H1	d1	d1'	ℓ	L	H1				
15	80	60	4	12	95	70	4	15	143	12	94	22.11	20	1/34	108	77	21.2	20.2	20	108	77	Rc 1/2	15	102	74
20	85	65	4	12	100	75	4	15	172	14	115	26.13	24	1/34	128	93	26.2	25.2	23	126	92	Rc 3/4	17	120	89
25	95	75	4	12	125	90	4	19	187	14	133	32.16	27	1/34	145	112	33.0	32.0	25	141	110	Rc 1	20	131	105
32	115	90	4	15	135	100	4	19	212	16	165	38.19	30	1/34	174	146.5	-	-	-	-	-	Rc 1 1/4	22	163	141
40	120	95	4	15	140	105	4	19	212	16	165	48.21	37	1/37	189	154	47.0	46.0	28	171	145	Rc 1 1/2	25	163	141
50	130	105	4	15	155	120	4	19	234	16	187	60.25	42	1/37	220	180	59.0	58.0	28	192	166	Rc 2	28	197	168
65	155	130	4	15	175	140	4	19	304	18	256	76.60	61	1/48	316	261	74.25	73.96	31	264	235	Rc 2 1/2	32	264	235
80	180	145	4	19	185	150	8	19	304	18	256	89.60	64	1/49	316	261	89.2	88.85	35.5	258	232	Rc 3	35	264	235
100	200	165	8	19	210	175	8	19	372	18	305	114.70	84	1/56	418	328	109.05	108.65	41.5	340	289	Rc 4	45	360	299

DIN

mm	FLANGED							SOCKET									THREADED				SPIGOT							
	DIN PN10				L	t	H1	U-PVC, C-PVC				PP, PVDF(DIN)					d2	ℓ	L	H1	U-PVC				PP, PVDF				
	D	C	n	h				d1	ℓ	L	H1	d1	d1'	ℓ	L	H1					d3	d3'	ℓ	H1	d3	ℓ	t PP	t PVDF	L	H1
15	95	65	4	14	130	12	88	20	16	102	72	19.50	19.30	14.5	99	71	Rp1/2	15	102	74	20	15	18.5	83	20	18.5	2.5	1.9	124	83
20	105	75	4	14	150	14	104	25	19	120	85	24.50	24.30	16	114	83	Rp3/4	17	120	89	25	20	24	99	25	22	2.7	1.9	144	99
25	115	85	4	14	160	14	120	32	22	131	104	31.50	31.30	18	123	100	Rp1	20	131	105	32	25	24.5	115	32	22.5	3.0	2.4	154	115
32	140	100	4	18	212	16	165	40	26	173	147	39.45	39.2	20.5	148	131	Rp1 1/4	22	163	141	-	-	-	-	-	-	-	-	-	-
40	150	110	4	18	200	16	159	50	31	163	142	49.45	49.20	23.5	148	131	Rp1 1/2	25	163	141	50	40	34	153	50	32	4.6	3.0	194	153
50	165	125	4	18	230	16	185	63	38	197	170	62.50	62.10	27.5	176	154	Rp2	28	197	168	63	51	38	178	63	36	5.8	3.0	224	178
65	185	145	4	18	304	18	256	75	44	282	245	74.25	73.95	31	256	227	Rp2 1/2	32	264	235	-	-	-	-	-	-	-	-	-	-
80	200	160	8	18	310	21	259	90	51	282	245	89.20	88.85	35.5	251	224	Rp3	35	264	235	90	80	51	252	90	38	8.2	4.3	295	246
100	220	180	8	18	350	18	305	110	61	349	305	109.05	108.65	41.5	310	279	Rp4	45	338	299	110	93.6	61	308	110	44.5	10.0	5.3	353	301

■ ANSI (Unit: inch)

inch	mm	d	d'	D1	D2	D3	D4	C1	H	H2	H3	H4	H5	A	S	e
1/2	15	0.59	0.59	1.89	1.65	0.98	0.53	1.42	2.03	1.18	0.24	0.12	0.31	3.62	0.41	0.22
3/4	20	0.79	0.79	2.36	1.65	0.98	0.59	1.42	2.34	1.44	0.24	0.12	0.39	3.94	0.43	0.22
1	25	0.98	0.98	2.76	1.65	0.98	0.59	1.42	2.68	1.71	0.24	0.12	0.39	4.33	0.43	0.22
1 1/4	32	1.57	1.26	3.94	2.24	1.38	0.91	1.97	3.50	2.40	0.39	0.12	0.47	5.16	0.71	0.26
1 1/2	40	1.57	1.26	3.94	2.24	1.38	0.91	1.97	3.50	2.40	0.39	0.12	0.47	5.16	0.71	0.26
2	50	2.01	1.69	4.96	2.24	1.38	0.91	1.97	4.04	2.85	0.39	0.12	0.47	6.26	0.71	0.26
2 1/2	65	3.07	2.28	5.98	3.19	2.17	1.18	2.76	5.51	3.70	0.51	0.12	0.75	9.45	0.94	0.35
3	80	3.07	2.28	5.98	3.19	2.17	1.18	2.76	5.51	3.70	0.51	0.12	0.75	9.45	0.94	0.35
4	100	3.94	3.07	8.27	4.57	2.76	1.57	4.02	7.01	4.96	0.63	0.12	0.91	11.81	1.34	0.43

ANSI

inch	mm	FLANGED							SOCKET													THREADED			
		ANSI CLASS 150				L	t	H1	U-PVC, C-PVC									PP, PVDF				d2	ℓ	L	H1
									ASTM SCH40				ASTM SCH80												
		D	C	n	h				d1	d1'	ℓ	L	d1	d1'	ℓ	L	H1	d1	ℓ	L	H1				
1/2	15	3.50	2.38	4	0.62	5.63	0.47	3.70	-	-	-	-	0.848	0.836	0.875	4.45	3.08	0.83	0.870	4.45	3.09	1/2-14 NPT	0.59	4.02	2.89
3/4	20	3.88	2.75	4	0.62	6.77	0.55	4.50	-	-	-	-	1.058	1.046	1.000	5.08	3.56	1.03	1.000	5.08	3.61	3/4-14 NPT	0.67	4.72	3.48
1	25	4.25	3.12	4	0.62	7.36	0.55	5.24	-	-	-	-	1.325	1.310	1.125	5.75	4.32	1.30	1.130	5.75	4.37	1-11 1/2 NPT	0.79	5.16	4.13
1 1/4	32	4.62	3.50	4	0.62	8.35	0.63	6.50	-	-	-	-	1.670	1.655	1.250	6.85	5.51	1.65	1.250	7.04	5.75	1 1/4-11 1/2 NPT	0.87	6.42	5.53
1 1/2	40	5.00	3.88	4	0.62	8.35	0.63	6.50	-	-	-	-	1.912	1.894	1.375	7.24	5.71	1.89	1.370	7.24	5.85	1 1/2-11 1/2 NPT	0.98	6.42	5.53
2	50	6.00	4.75	4	0.75	9.21	0.63	7.34	-	-	-	-	2.387	2.369	1.500	8.23	6.66	2.36	1.500	8.23	6.76	2-11 1/2 NPT	1.10	7.76	6.61
2 1/2	65	7.00	5.50	4	0.75	11.97	0.71	10.06	-	-	-	-	2.889	2.868	1.750	11.21	9.65	2.88	1.752	11.21	9.65	2 1/2-8 NPT	1.26	10.39	9.25
3	80	7.50	6.00	4	0.75	11.97	0.71	10.06	-	-	-	-	3.516	3.492	1.875	11.10	9.59	3.48	1.874	11.10	11.10	3-8 NPT	1.38	10.39	9.25
4	100	9.00	7.50	8	0.75	14.66	0.71	12.01	4.518	4.491	2.000	13.90	-	-	-	-	11.58	4.48	2.252	14.37	14.37	4-8 NPT	1.77	14.17	11.77

AUTOMATIC | PNEUMATIC | TYPE TA | DOUBLE ACTING | AIR TO OPEN | AIR TO CLOSE

3 WAY BALL VALVE TYPE 23

TYPE——A23K

CONNECTION / FLANGED, SOCKET, THREADED——JIS, DIN, ANSI

FLANGED

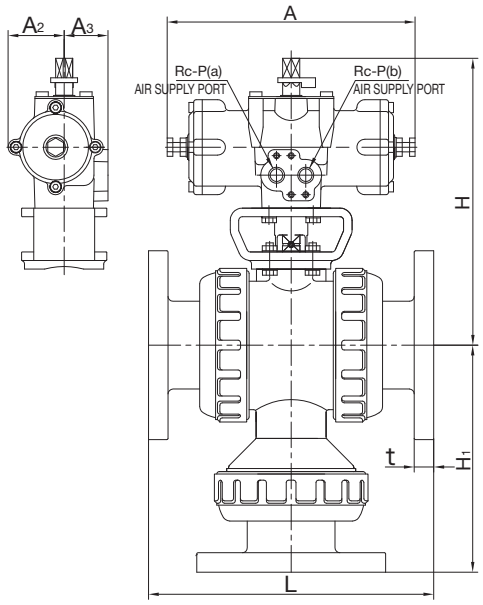

ACTUATOR SHAPE FOR TA2A-0402D

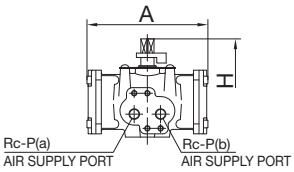

ACTUATOR SELECTION CHART

SIZE	ACTUATOR TYPE
15mm (1/2inch)	TA2A-0402D
20mm (3/4inch)	
25mm (1inch)	
32mm (1 1/4inch)	TA2A-050D
40mm (1 1/2inch)	
50mm (2inch)	
65mm (2 1/2inch)	TA2A-063D
80mm (3inch)	
100mm (4inch)	TA2A-080D

For detailed specifications, see P.124

SOCKET

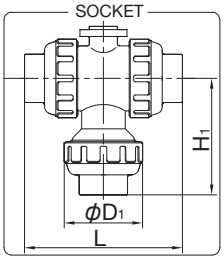

THREADED

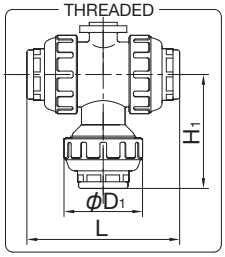

■ JIS, DIN (Unit: mm)

								JIS								DIN								
								FLANGED JIS10K			SOCKET				THREADED	FLANGED DIN PN10			SOCKET				THREADED	
											U-PVC, C-PVC		PP						U-PVC, C-PVC		PP			
mm	D1	H	H1	A	A2	A3	P	L	t	H1	L	H1	L	H1	L	H1	L	t	H1	L	H1	L	H1	L	H1
15	48	159.5	29	110	25	32	1/8	143	12	94	108	77	108	77	102	74	130	12	88	102	72	99	71	102	74
20	60	166	35	110	25	32	1/8	172	14	115	128	93	126	92	120	89	150	14	104	120	85	114	83	120	89
25	70	173	39	110	25	32	1/8	187	14	133	145	112	141	110	131	105	160	14	120	131	104	123	100	131	105
32	100	224	55	210	46	36	1/4	212	16	165	174	154	-	-	163	141	212	16	165	173	147	148	131	163	141
40	100	224	55	210	46	36	1/4	212	16	165	189	154	171	145	163	141	200	16	159	163	142	148	131	163	141
50	126	235.5	66	210	46	36	1/4	234	16	187	220	180	192	166	197	168	230	16	185	197	170	176	154	197	168
65	152	277	85	250	57	38	1/4	304	18	256	316	261	264	235	264	235	304	18	256	282	245	256	227	264	235
80	152	277	85	250	57	38	1/4	304	18	256	316	261	258	232	264	235	310	21	259	282	245	251	224	264	235
100	210	348	110	292	71	45	1/4	372	18	305	418	328	340	289	360	299	350	18	305	349	305	310	279	338	299

■ ANSI (Unit: inch)

									ANSI								
									FLANGED ANSI CLASS150			SOCKET				THREADED	
												U-PVC, C-PVC		PP, PVDF			
inch	mm	D1	H	H1	A	A2	A3	P	L	t	H1	L	H1	L	H1	L	H1
1/2	15	1.89	6.28	1.14	4.33	0.98	1.26	1/8	5.63	0.47	3.70	4.45	3.08	4.45	3.09	4.02	2.89
3/4	20	2.36	6.54	1.38	4.33	0.98	1.26	1/8	6.77	0.55	4.50	5.08	3.56	5.08	3.61	4.72	3.48
1	25	2.76	6.81	1.54	4.33	0.98	1.26	1/8	7.36	0.55	5.24	5.75	4.32	5.75	4.37	5.16	4.13
1 1/4	32	3.94	8.82	2.17	8.27	1.81	1.42	1/4	8.35	0.63	6.50	6.85	5.51	7.04	5.75	6.42	5.53
1 1/2	40	3.94	8.82	2.17	8.27	1.81	1.42	1/4	8.35	0.63	6.50	7.24	5.71	7.24	5.85	6.42	5.53
2	50	4.96	9.27	2.60	8.27	1.81	1.42	1/4	9.21	0.63	7.34	8.23	6.66	8.23	6.76	7.76	6.61
2 1/2	65	5.98	10.91	3.35	9.84	2.24	1.50	1/4	11.97	0.71	10.06	11.21	9.65	11.21	9.65	10.39	9.25
3	80	5.98	10.91	3.35	9.84	2.24	1.50	1/4	11.97	0.71	10.06	11.10	9.59	11.10	11.10	10.39	9.25
4	100	8.27	13.70	4.33	11.50	2.80	1.77	1/4	14.66	0.71	12.01	13.90	11.58	14.37	14.37	14.17	11.77

AUTOMATIC | PNEUMATIC | TYPE TA | DOUBLE ACTING | AIR TO OPEN | AIR TO CLOSE

3 WAY BALL VALVE TYPE 23

TYPE——A23K

CONNECTION / FLANGED, SOCKET, THREADED——JIS, DIN, ANSI

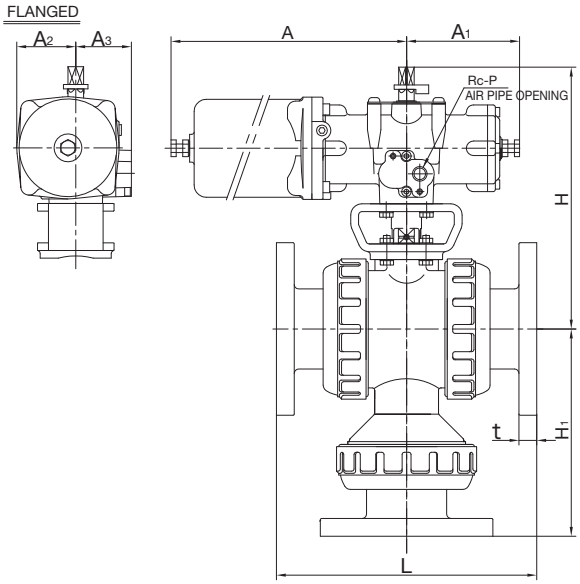

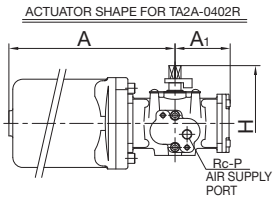

ACTUATOR SELECTION CHART

SIZE	ACTUATOR TYPE
15mm (1/2inch)	TA2A-0402R
20mm (3/4inch)	
25mm (1inch)	
32mm (1 1/4inch)	TA2A-050R
40mm (1 1/2inch)	
50mm (2inch)	
65mm (2 1/2inch)	TA2A-063R
80mm (3inch)	
100mm (4inch)	TA2A-080R

For detailed specifications, see P.124

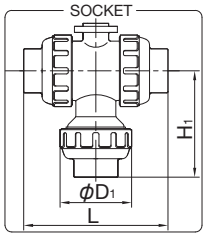

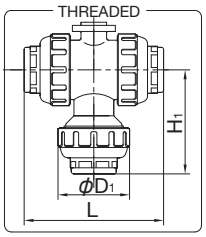

■ JIS, DIN (Unit: mm)

									JIS									DIN								
									FLANGED JIS10K			SOCKET				THREADED		FLANGED DIN PN10			SOCKET				THREADED	
												U-PVC, C-PVC		PP							U-PVC, C-PVC		PP			
mm	D1	H	H1	A	A1	A2	A3	P	L	t	H1	L	H1	L	H1	L	H1	L	t	H1	L	H1	L	H1	L	H1
15	48	159.5	29	190	55	42	49	1/8	143	12	94	108	77	108	77	102	74	130	12	88	102	72	99	71	102	74
20	60	161.5	35	190	55	42	49	1/8	172	14	115	128	93	126	92	120	89	150	14	104	120	85	114	83	120	89
25	70	168.5	39	190	55	42	49	1/8	187	14	133	145	112	141	110	131	105	160	14	120	131	104	123	100	131	105
32	100	224	55	240	105	53	50	1/4	212	16	165	174	154	-	-	163	141	212	16	165	173	147	148	131	163	141
40	100	224	55	240	105	53	50	1/4	212	16	165	189	154	171	145	163	141	200	16	159	163	142	148	131	163	141
50	126	235.5	66	240	105	53	50	1/4	234	16	187	220	180	192	166	197	168	230	16	185	197	170	176	154	197	168
65	152	277	85	288	125	67	52	1/4	304	18	256	316	261	264	235	264	235	304	18	256	282	245	256	227	264	235
80	152	277	85	288	125	67	52	1/4	304	18	256	316	261	258	232	264	235	310	21	259	282	245	251	224	264	235
100	210	348	110	341	146	82.5	59	1/4	372	18	305	418	328	340	289	360	299	350	18	305	349	305	310	279	338	299

■ ANSI (Unit: inch)

										ANSI								
										FLANGED ANSI CLASS150			SOCKET				THREADED	
													U-PVC, C-PVC		PP, PVDF			
inch	mm	D1	H	H1	A	A1	A2	A3	P	L	t	H1	L	H1	L	H1	L	H1
1/2	15	1.89	6.28	1.14	7.48	2.17	1.65	1.93	1/8	5.63	0.47	3.70	4.45	3.08	4.45	3.09	4.02	2.89
3/4	20	2.36	6.36	1.38	7.48	2.17	1.65	1.93	1/8	6.77	0.55	4.50	5.08	3.56	5.08	3.61	4.72	3.48
1	25	2.76	6.63	1.54	7.48	2.17	1.65	1.93	1/8	7.36	0.55	5.24	5.75	4.32	5.75	4.37	5.16	4.13
1 1/4	32	3.94	8.82	2.17	9.45	4.13	2.09	1.97	1/4	8.35	0.63	6.50	6.85	5.51	7.04	5.75	6.42	5.53
1 1/2	40	3.94	8.82	2.17	9.45	4.13	2.09	1.97	1/4	8.35	0.63	6.50	7.24	5.71	7.24	5.85	6.42	5.53
2	50	4.96	9.27	2.60	9.45	4.13	2.09	1.97	1/4	9.21	0.63	7.34	8.23	6.66	8.23	6.76	7.76	6.61
2 1/2	65	5.98	10.91	3.35	11.34	4.92	2.64	2.05	1/4	11.97	0.71	10.06	11.21	9.65	11.21	9.65	10.39	9.25
3	80	5.98	10.91	3.35	11.34	4.92	2.64	2.05	1/4	11.97	0.71	10.06	11.10	9.59	11.10	11.10	10.39	9.25
4	100	8.27	13.70	4.33	13.43	5.75	3.25	2.32	1/4	14.66	0.71	12.01	13.90	11.58	14.37	14.37	14.17	11.77

AUTOMATIC | ELECTRIC | TYPE T | Single-Phase 100V • Single-Phase 200V

3 WAY BALL VALVE TYPE 23

TYPE——A23T

CONNECTION / FLANGED, SOCKET, THREADED——JIS, DIN, ANSI

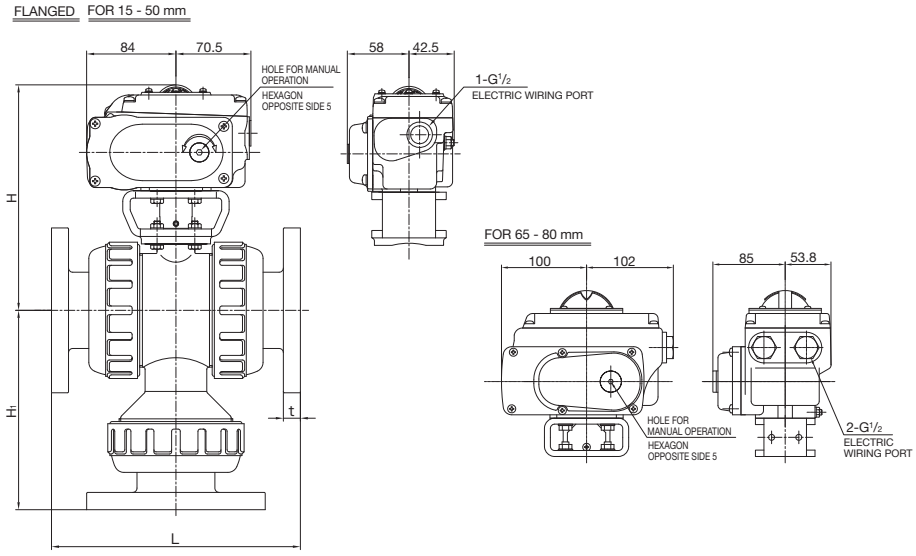

ACTUATOR SELECTION CHART

SIZE	ACTUATOR TYPE
15mm (1/2inch)	T-00
20mm (3/4inch)	
25mm (1inch)	
32mm (1 1/4inch)	
40mm (1 1/2inch)	
50mm (2inch)	
65mm (2 1/2inch)	T-0
80mm (3inch)	
100mm (4inch)	

For detailed specifications, see P.139

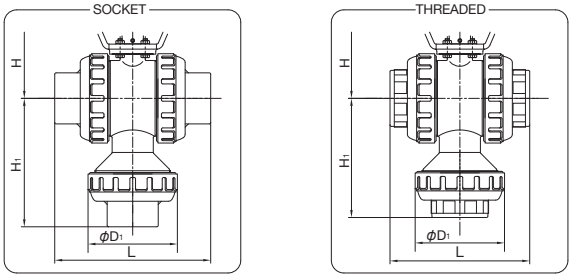

■ JIS, DIN (Unit: mm)

mm	D1	H	JIS										DIN								
			FLANGED JIS10K			SOCKET				THREADED			FLANGED DIN PN10			SOCKET				THREADED	
						U-PVC, C-PVC		PP								U-PVC, C-PVC		PP			
			L	t	H1	L	H1	L	H1	L	H1		L	t	H1	L	H1	L	H1	L	H1
15	48	169.5	143	12	94	108	77	108	77	102	74		130	12	88	102	72	99	71	102	74
20	60	176	172	14	115	128	93	126	92	120	89		150	14	104	120	85	114	83	120	89
25	70	183	187	14	133	145	112	141	110	131	105		160	14	120	131	104	123	100	131	105
32	100	200.5	212	16	165	174	154	-	-	163	141		212	16	165	173	147	148	131	163	141
40	100	200.5	212	16	165	189	154	171	145	163	141		200	16	159	163	142	148	131	163	141
50	126	212	234	16	187	220	180	192	166	197	168		230	16	185	197	170	176	154	197	168
65	152	289	304	18	256	316	261	264	235	264	235		304	18	256	282	245	256	227	264	235
80	152	289	304	18	256	316	261	258	232	264	235		310	21	259	282	245	251	224	264	235
100	210	327	372	18	305	418	328	340	289	360	299		350	18	305	349	305	310	279	338	299

■ ANSI (Unit: inch)

inch	mm	D1	H	ANSI								
				FLANGED ANSI CLASS150			SOCKET				THREADED	
							U-PVC, C-PVC		PP, PVDF			
				L	t	H1	L	H1	L	H1	L	H1
1/2	15	1.89	6.67	5.63	0.47	3.70	4.45	3.08	4.45	3.09	4.02	2.89
3/4	20	2.36	6.93	6.77	0.55	4.50	5.08	3.56	5.08	3.61	4.72	3.48
1	25	2.76	7.20	7.36	0.55	5.24	5.75	4.32	5.75	4.37	5.16	4.13
1 1/4	32	3.94	7.89	8.35	0.63	6.50	6.85	5.51	7.04	5.75	6.42	5.53
1 1/2	40	3.94	7.89	8.35	0.63	6.50	7.24	5.71	7.24	5.85	6.42	5.53
2	50	4.96	8.35	9.21	0.63	7.34	8.23	6.66	8.23	6.76	7.76	6.61
2 1/2	65	5.98	11.38	11.97	0.71	10.06	11.21	9.65	11.21	9.65	10.39	9.25
3	80	5.98	11.38	11.97	0.71	10.06	11.10	9.59	11.10	11.10	10.39	9.25
4	100	8.27	12.87	14.66	0.71	12.01	13.90	11.58	14.37	14.37	14.17	11.77

3 WAY BALL VALVE TYPE 23 H

- HORIZONTAL 3 WAY BALL VALVE
- T-SHAPED FLOW PATH ALLOWS FOR EASY SWITCHING OF FLOW CHANNEL.
- END CONNECTOR AND UNION NUT ARE COMPATIBLE WITH 3 WAY BALL VALVE TYPE 23.

BASIC SPECIFICATIONS

VALVE TYPE——**3 WAY BALL VALVE TYPE 23H**

SIZE——**25 mm–40 mm (1 inch–1 1/2 inch)**

BODY MATERIAL——**PP**

SEAL MATERIAL / SEAT——**PTFE**

O-RING——**EPDM** **FKM** **etc.**

CONNECTION / FLANGED—**JIS10K, DIN PN10, ANSI CLASS150**

SOCKET——**JIS, DIN, ANSI**

THREADED—**Rc, Rp, NPT**

	FLUID TEMPERATURE	MAXIMUM WORKING PRESSURE (NORMAL TEMPERATURE) MPa{kgf/cm²}	CONNECTION METHOD		
			FLANGED	SOCKET	THREADED
PP	-20℃ ~ 80℃	1.0 {10.2}	○	○	○

NOTE The maximum working pressure is the value including the water hammer pressure. Be careful that the maximum working pressure is not exceeded during use. Cannot completely stop the flow in three directions.

* Concerning the allowable pressure for each temperature and material, see the technical documents at the end of this catalog.

MANUAL



PARTS LIST MANUAL

FLANGED

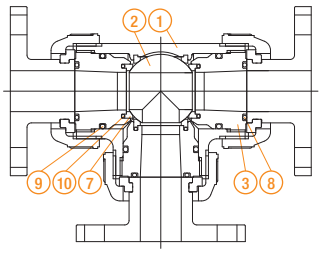

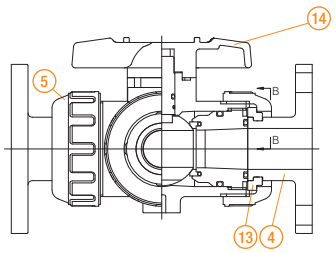

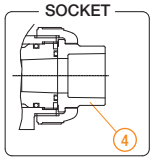



(DETAILS OF STEM)

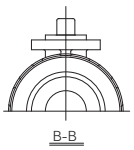

B-B

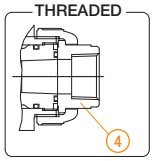

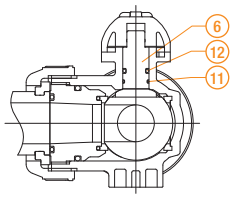

PART NO. / NAME	QTY	MATERIAL
①BODY	1	PP
②BALL	1	PP
③UNION	3	PP
④END CONNECTOR	3	PP
⑤UNION NUT	3	PPG
⑥STEM	1	PP

PART NO. / NAME	QTY	MATERIAL
⑦SEAT	4	PTFE
⑧O-RING (A)	3	EPDM, FKM, etc.
⑨O-RING (B)	3	EPDM, FKM, etc.
⑩O-RING (C)	3	EPDM, FKM, etc.
⑪O-RING (D)	1	EPDM, FKM, etc.
⑫O-RING (E)	1	EPDM, FKM, etc.

PART NO. / NAME	QTY	MATERIAL
⑬STOP RING	3	PVDF (Used for flanged type.)
⑭HANDLE	1	ABS

FLOW DIRECTION DIAGRAM MANUAL

0°(360°)	90°	180°	270°
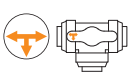	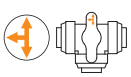	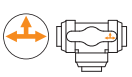	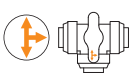

PRODUCT MODEL CODE LIST

MANUAL

ACTUATION	TYPE	OPERATING SYSTEM	BODY MATERIAL	SEAL MATERIAL	CONNECTION	STANDARD	SIZE
V	3H	LV	P	*	*	*	***

V	MANUAL VALVE	3H	23H	LV	LEVER TYPE	PP	PP	E	EPDM	S	SOCKET	J	JIS
								V	FKM	N	THREADED	D	DIN
										P	SPIGOT	A	ANSI
										F	FLANGED	1	JIS10K

025	25mm
032	32mm
040	40mm

NOTE (1) The available ball shape is T port only. (2) The socket and spigot types are weld type.
(3) Not compatible with 32-mm spigot type and JIS socket type. (4) Parts compliant with connection standards other than JIS (such as ANSI and DIN) are also available.

MANUAL

3 WAY BALL VALVE TYPE 23 H

TYPE——V3HLV
CONNECTION / FLANGED, SOCKET, THREADED——JIS, DIN, ANSI SPIGOT——DIN

FLANGED

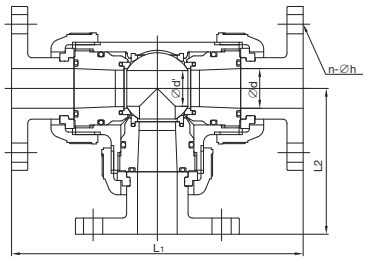

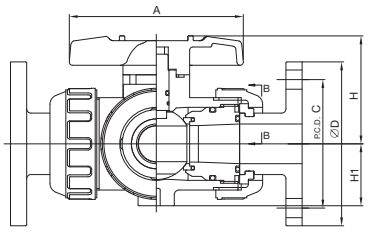

SOCKET

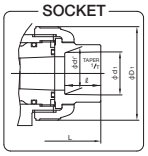

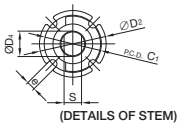

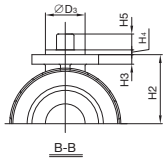

THREADED

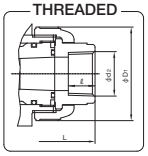

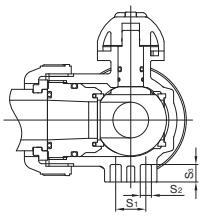

■ JIS, DIN (Unit: mm)

	JIS																													
																			FLANGED							SOCKET					THREADED			
mm	d	d'	D1	D2	D3	D4	C1	H	H1	H2	H3	H4	H5	A	S	S1	S2	S3	e	JIS10K				t	L1	L2	d1	d1'	ℓ	L1	L2	d2	ℓ	L1	L2
																				D	C	n	h												
25	25	22	70	42	25	15	36	68	39	44	6	3	10	110	11	19	7.3	11	5.5	125	90	4	19	14	216	108	33	32	25	170	85	Rc1	20	159	80
32	40	34	100	57	35	23	50	89	55	61	10	3	12	131	18	30	9	15	6.5	135	100	4	19	16	260	130	-	-	-	-	-	Rc1 1/4	22	208	104
40	40	34	100	57	35	23	50	89	55	61	10	3	12	131	18	30	9	15	6.5	140	100	4	19	16	260	130	47	46	28	219	109.5	Rc1 1/2	25	208	104

	DIN																			
	FLANGED							SOCKET					THREADED				SPIGOT				
mm	DIN PN10				t	L1	L2	d1	d1'	ℓ	L1	L2	d2	ℓ	L1	L2	d3	ℓ	t	L1	L2
	D	C	n	h																	
25	115	85	4	14	14	189	94.5	31.5	31.3	18	152	76	Rp 1	20	159	79.5	32	22.5	3.0	183	91.5
32	140	100	4	16	16	260	130	39.45	39.2	20.5	197	98.5	Rp 1 1/4	22	208	104	-	-	-	-	-
40	150	110	4	16	16	248	124	49.45	49.2	23.5	197	98.5	Rp 1 1/2	25	208	104	50	32	4.6	242	121

■ ANSI (Unit: inch)

inch	mm	d	d'	D1	D2	D3	D4	C1	H	H1	H2	H3	H4	H5	A	S	S1	S2	S3	e
1	25	0.98	0.87	2.76	1.65	0.98	0.59	1.42	2.68	1.54	1.71	0.24	0.12	0.39	4.33	0.43	0.75	0.29	0.43	0.22
1 1/4	32	1.57	1.34	3.94	2.24	1.38	0.91	1.97	3.50	2.17	2.40	0.39	0.12	0.47	5.16	0.71	1.18	0.35	0.59	0.26
1 1/2	40	1.57	1.34	3.94	2.24	1.38	0.91	1.97	3.50	2.17	2.40	0.39	0.12	0.47	5.16	0.71	1.18	0.35	0.59	0.26

		ANSI														
		FLANGED							SOCKET				THREADED			
inch	mm	ANSI CLASS150				t	L1	L2	d1	ℓ	L1	L2	d2	ℓ	L1	L2
		D	C	n	h											
1	25	4.25	3.13	4	0.62	0.55	8.50	4.25	1.30	1.13	6.77	3.39	1-11 1/2NPT	0.79	6.26	3.13
1 1/4	32	4.62	3.50	4	0.62	0.63	10.24	5.12	1.65	1.25	8.74	4.37	1 1/4-11 1/2NPT	0.87	8.19	4.09
1 1/2	40	5.00	3.88	4	0.62	0.63	10.24	5.12	1.89	1.37	8.94	4.47	1 1/2-11 1/2NPT	0.98	8.19	4.09

LAB COCK

- LIGHT-WEIGHT AND COMPACT PLASTIC VALVE WITH EXCELLENT CORROSION RESISTANCE, FLOW CHARACTERISTICS, DURABILITY AND FUNCTIONALITY
- WIDE SELECTION FROM A PRODUCT LINE OF 16 TYPES
- OCTAGON BODY ALLOWING FOR EASY PIPING WITH SPANNER
- FLOW CONTROL IS AVAILABLE.

BASIC SPECIFICATIONS

VALVE TYPE——**LAB COCK**
BODY MATERIAL——U-PVC
SEAL MATERIAL / SEAT——PTFE EPDM **etc.**
O-RING——EPDM FKM **etc.**
HIGH PURITY SERIES——**LUBRICANT FREE**

	FLUID TEMPERATURE	MAXIMUM WORKING PRESSURE {NORMAL TEMPERATURE} MPa{kgf/cm²}	CONNECTION METHOD
U-PVC	0℃ ~ 50℃	1.0 {10.2}	Hose type, Male thread type, Female thread type (Any combination is available.)

NOTE (1) Degreased type is also available by made-to-order. (2) The maximum working pressure is the value including the water hammer pressure. Be careful that the maximum working pressure is not exceeded during use.
* Concerning the allowable pressure for each temperature and material, see the technical documents at the end of this catalog.

MANUAL

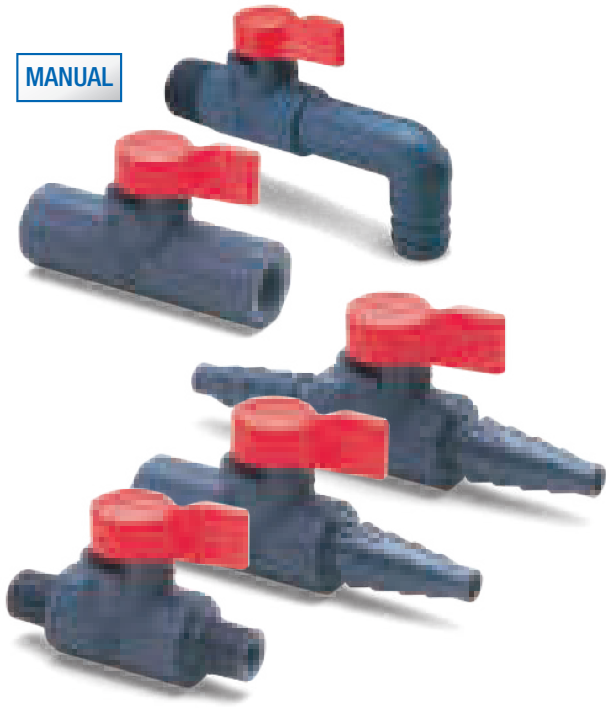

PARTS LIST MANUAL

1. FEMALE THREAD X FEMALE THREAD

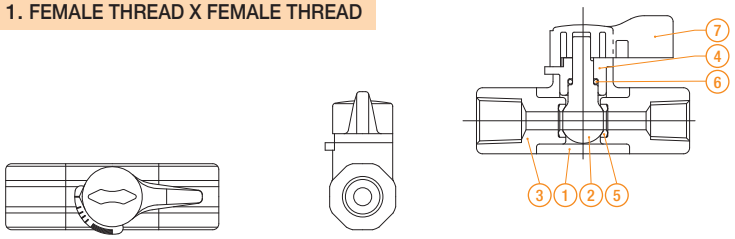

PART NO. / NAME	QTY	MATERIAL
1 BODY	1	U-PVC
2 BALL STEM	1	U-PVC
3 END CONNECTOR	2	U-PVC
4 STEM HOLDER	1	U-PVC
5 SEAT*	2	EPDM, PTFE, etc.
6 O-RING	1	EPDM, etc.
7 HANDLE	1	ABS

* For degreased type, PTFE only.

7. MALE THREAD X ELBOW 16 mm LUB. FREE

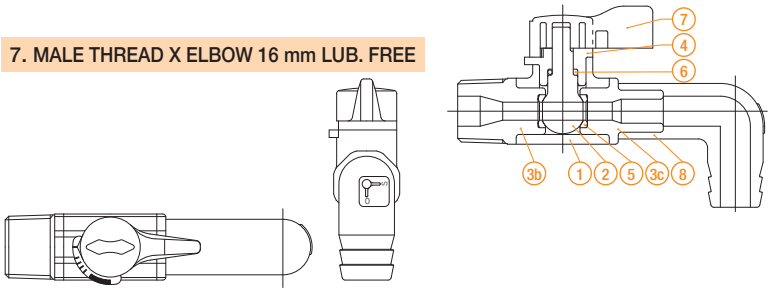

PART NO. / NAME	QTY	MATERIAL
1 BODY	1	U-PVC
2 BALL STEM	1	U-PVC
3b END CONNECTOR	1	U-PVC
3c END CONNECTOR	1	U-PVC
4 STEM HOLDER	1	U-PVC
5 SEAT	2	PTFE
6 O-RING	1	EPDM, etc.
7 HANDLE	1	ABS
8 ELBOW	1	U-PVC

* Standard products are degreased.

PRODUCT MODEL CODE LIST MANUAL

ACTUATION	TYPE	OPERATING SYSTEM	BODY MATERIAL	SEAL MATERIAL	STANDARD	CONNECTION	HIGH PURITY SERIES
V	LC	LV	U	*	*	****	1
V MANUAL VALVE	LC LAB COCK	LV LEVER TYPE	U U-PVC	E EPDM V FKM 1 PTFE/EPDM	J JIS D DIN A ANSI	SEE CONNECTION P.66.	1 LUBRICANT FREE

MANUAL

LAB COCK

TYPE——VLCLV

CONNECTION / MALE THREAD, FEMALE THREAD, HOSE——JIS, DIN, ANSI

1. Female thread x Female thread

- 1/4 female thread x 1/4 female thread
- 3/8 female thread x 1/4 female thread
- 3/8 female thread x 3/8 female thread



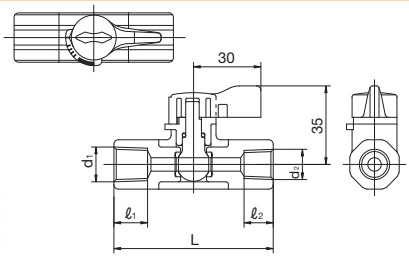

2. Hose x Hose

- Hose x Hose



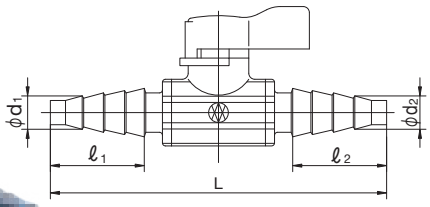

3. Female thread x Hose

- 1/4 female thread x Hose
- 3/8 female thread x Hose



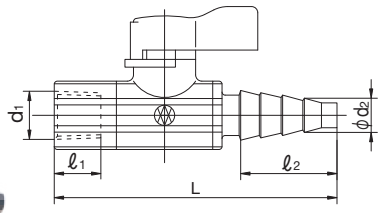

4. Male thread x Hose

- 1/4 male thread x Hose
- 1/2 male thread x Hose



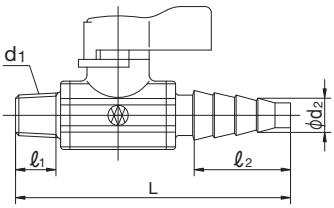

5. Male thread x Male thread

- 1/4 male thread x 1/4 male thread
- 1/2 male thread x 1/4 male thread
- 1/2 male thread x 1/2 male thread



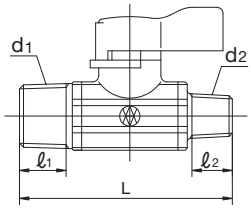

6. Male thread x Female thread

- 1/4 male thread x 1/4 female thread
- 1/4 male thread x 3/8 female thread
- 1/2 male thread x 1/4 female thread
- 1/2 male thread x 3/8 female thread



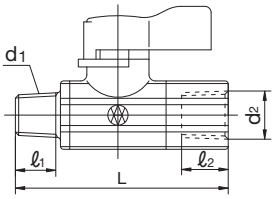

7. Male thread x Elbow 16 mm degreased

- 1/2 male thread x Elbow 16 mm

* Standard products are LUB. FREE.



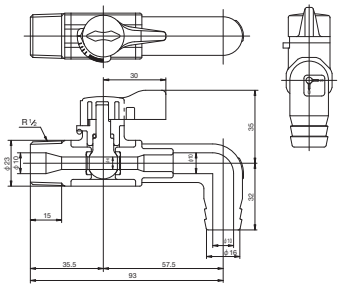

CONNECTION CONNECTOR

HOSE TYPE CONNECTION CONNECTOR

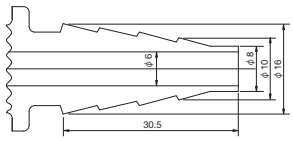

THREAD TYPE CONNECTION CONNECTOR

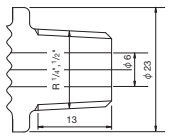

FEMALE THREAD TYPE CONNECTION CONNECTOR

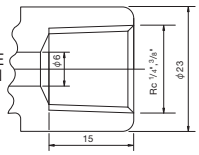

	CONNECTION	JIS					DIN					ANSI				
		d1	d2	ℓ1	ℓ2	L	d1	d2	ℓ1	ℓ2	L	d1	d2	ℓ1	ℓ2	L
1. Female thread x Female thread	N4N4	Rc 1/4	Rc 1/4	15	15	71	Rp 1/4	Rp 1/4	15	15	71	1/4-18NPT	1/4-18NPT	0.51	0.51	2.80
	N8N4	Rc 3/8	Rc 1/4	15	15	71	Rp 3/8	Rp 1/4	15	15	71	3/8-18NPT	1/4-18NPT	0.59	0.51	2.80
	N8N8	Rc 3/8	Rc 3/8	15	15	71	Rp 3/8	Rp 3/8	15	15	71	3/8-18NPT	3/8-18NPT	0.59	0.59	2.80
2. Hose x Hose	H0H0	10	10	30.5	30.5	111	10	10	30.5	30.5	111	0.39	0.39	1.20	1.20	4.37
3. Female thread x Hose	N4H0	Rc 1/4	10	15	30.5	91	Rp 1/4	10	15	30.5	91	1/4-18NPT	0.39	0.51	1.20	3.58
	N8H0	Rc 3/8	10	15	30.5	91	Rp 3/8	10	15	30.5	91	3/8-18NPT	0.39	0.59	1.20	3.58
4. Male thread x Hose	04H0	R 1/4	10	13	30.5	88.5	R 1/4	10	13	30.5	88.5	1/4-18NPT	0.39	0.51	1.20	3.48
	02H0	R 1/2	10	15	30.5	91	R 1/2	10	15	30.5	91	1/2-14NPT	0.39	0.59	1.20	3.58
5. Male thread x Male thread	0404	R 1/4	R 1/4	13	13	66	R 1/4	R 1/4	13	13	66	1/4-18NPT	1/4-18NPT	0.51	0.51	2.60
	0204	R 1/2	R 1/4	15	13	68.5	R 1/2	R 1/4	15	13	68.5	1/2-14NPT	1/4-18NPT	0.59	0.51	2.70
	0202	R 1/2	R 1/2	15	15	71	R 1/2	R 1/2	15	15	71	1/2-14NPT	1/2-14NPT	0.59	0.59	2.80
6. Male thread x Female thread	04N4	R 1/4	Rc 1/4	13	15	68.5	R 1/4	Rp 1/4	13	15	68.5	1/4-18NPT	1/4-18NPT	0.51	0.51	2.70
	04N8	R 1/4	Rc 3/8	13	15	68.5	R 1/4	Rp 3/8	13	15	68.5	1/4-18NPT	3/8-18NPT	0.51	0.59	2.70
	02N4	R 1/2	Rc 1/4	15	15	71	R 1/2	Rp 1/4	15	15	71	1/2-14NPT	1/4-18NPT	0.59	0.51	2.80
	02N8	R 1/2	Rc 3/8	15	15	71	R 1/2	Rp 3/8	15	15	71	1/2-14NPT	3/8-18NPT	0.59	0.59	2.80
7. Male thread x Elbow	02L01	R 1/2	16	15	32	93	-	-	-	-	-	1/2-14NPT	0.63	0.59	1.26	3.66

COMPACT BALL VALVE TYPE 27

- WITH A SMALL NUMBER OF COMPONENTS AND LIGHT WEIGHT, COMPACT DESIGN, SUITABLE FOR INSTALLATION IN A NARROW SPACE AND IDEAL FOR FACILITY PIPING IN PLANTS.
- THE SPHERICAL VALVE ELEMENT ALLOWS FOR A STRAIGHT FLOW PATH AND EXTREMELY SMALL FLUID RESISTANCE. (EXCELLENT WATER CHARACTERISTICS)
- NO RISK OF DIFFICULT HANDLE OPERATION DUE TO THERMAL EXPANSION OR CONTRACTION.
- USING PTFE, THE SEAT IS HIGHLY RESISTANT TO CORROSION, CHEMICALS AND ABRASION.

BASIC SPECIFICATIONS

VALVE TYPE——**COMPACT BALL VALVE**
SIZE——**13 mm—50 mm (3/8 inch—2 inch)**
BODY MATERIAL——**U-PVC** **C-PVC**
SEAL MATERIAL / SEAT——**PTFE**
O-RING——**EPDM** **etc.**
CONNECTION / SOCKET——**JIS, DIN, ANSI**
THREADED——**Rc, Rp, NPT**

	FLUID TEMPERATURE	MAXIMUM WORKING PRESSURE (NORMAL TEMPERATURE) MPa{kgf/cm²}	CONNECTION METHOD	
			SOCKET	THREADED
U-PVC	0℃ ~ 50℃	1.0 {10.2}	○	○
C-PVC	0℃ ~ 90℃	1.0 {10.2}	○	○

NOTE (1) The maximum working pressure is the value including the water hammer pressure. Be careful that the maximum working pressure is not exceeded during use. (2) The ball-type valves have dead spaces for structural reasons. Note that volatile liquids, such as hydrogen peroxide (H_2O_2) and sodium hypochlorite (NaClO), vaporize in those dead spaces, which may cause abnormal pressure increase in the valve. (When the internal pressure abnormally increases due to vaporization, the gas will be compressive fluid. If the valve breaks in this state, it will be very dangerous, causing explosion and scattering of fragments.)

* Concerning the allowable pressure for each temperature and material, see the technical documents at the end of this catalog.

MANUAL



PARTS LIST MANUAL

SOCKET

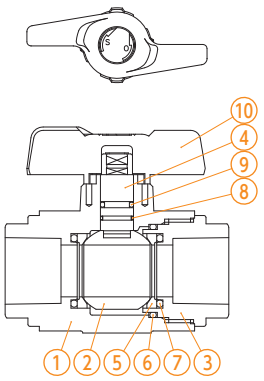

THREADED

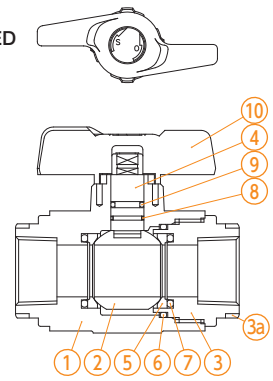

PART NO. / NAME	QTY	MATERIAL
① BODY	1	U-PVC、C-PVC
② BALL	1	U-PVC、C-PVC
③ END CONNECTOR	1	U-PVC、C-PVC
③a RING	2	SUS304 (Used for C-PVC 13 - 25 mm threaded type.)
④ STEM	1	U-PVC、C-PVC
⑤ SEAT	2	PTFE

PART NO. / NAME	QTY	MATERIAL
⑥ O-RING (B)	1	EPDM,etc.
⑦ O-RING (C)	2	EPDM,etc.
⑧ O-RING (D)	1	EPDM,etc.
⑨ O-RING (E)	1	EPDM,etc.
⑩ HANDLE	1	ABS

PRODUCT MODEL CODE LIST

MANUAL

ACTUATION	TYPE	OPERATING SYSTEM	BODY MATERIAL	SEAL MATERIAL	CONNECTION	STANDARD	SIZE	HIGH PURITY SERIES
V	7B	LV	*	*	*	*	***	1
V MANUAL VALVE	7B TYPE 27	LV LEVER TYPE	U U-PVC C C-PVC	E EPDM V FKM	S SOCKET N THREADED	J JIS D DIN A ANSI	013 13mm ~ 050 50mm	1 LUBRICANT FREE

MANUAL

COMPACT BALL VALVE TYPE 27

TYPE——V7BLV

CONNECTION / SOCKET, THREADED——JIS, DIN, ANSI

SOCKET

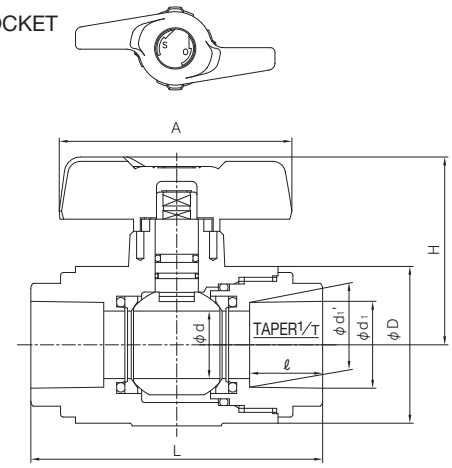

THREADED

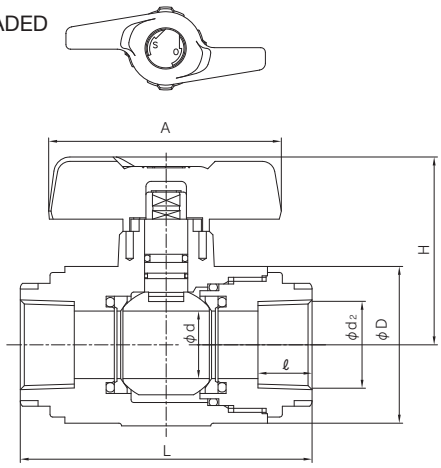

■ JIS, DIN (Unit: mm)

mm	inch	d	A	D	H	JIS							DIN					
						SOCKET				THREADED			SOCKET			THREADED		
						d1	ℓ	1/T	L	d2	ℓ	L	d1	ℓ	L	d2	ℓ	L
13	3/8	15	75	40	52.5	18.20	17	1/30	69	-	-	-	16	14	69	Rp3/8	15	69
15	1/2	15	75	40	52.5	22.11	20	1/34	79	Rc1/2	15	69	20	16	79	Rp1/2	15	79
20	3/4	20	87	49	62.5	26.13	24	1/34	94	Rc3/4	17	94	25	19	94	Rp3/4	17	94
25	1	25	87	58	69.5	32.16	27	1/34	108	Rc1	20	108	32	22	108	Rp1	20	108
32	1 1/4	31	105	68	81.5	38.19	30	1/34	121	Rc1 1/4	22	121	40	26	121	Rp1 1/4	22	121
40	1 1/2	40	135	82.5	96.0	48.21	37	1/37	146	Rc1 1/2	25	146	50	31	146	Rp1 1/2	25	146
50	2	51	135	104	107.5	60.25	42	1/37	175	Rc2	28	175	63	38	175	Rp2	28	175

■ ANSI (Unit: inch)

inch	mm	d	A	D	H	ANSI						
						SOCKET ASTM SCH40				THREADED		
						d1	d1'	ℓ	L	d2	ℓ	L
3/8	13	0.59	2.95	1.57	2.07	0.687	0.671	0.59	2.72	3/8-18NPT	0.59	2.72
1/2	15	0.59	2.95	1.57	2.07	0.848	0.836	0.69	3.11	1/2-14NPT	0.59	3.11
3/4	20	0.79	3.43	1.93	2.46	1.058	1.046	0.72	3.70	3/4-14NPT	0.67	3.70
1	25	0.98	3.43	2.28	2.74	1.325	1.310	0.87	4.25	1-11 1/2NPT	0.79	4.25
1 1/4	32	1.22	4.13	2.68	3.21	1.670	1.655	0.94	4.76	1 1/4-11 1/2NPT	0.87	4.76
1 1/2	40	1.57	5.31	3.25	3.78	1.912	1.894	1.09	5.75	1 1/2-11 1/2NPT	0.98	5.75
2	50	2.01	5.31	4.09	4.23	2.387	2.369	1.16	6.86	2-11 1/2NPT	1.10	6.86

ENSAT (METAL INSERT) MOUNTING PROCEDURE

DIAPHRAGM VALVE TYPE 14	15mm - 100mm
TRUE UNION DIAPHRAGM VALVE TYPE 14	15mm - 50mm
BALL VALVE TYPE 21, 21α	15mm - 50mm
BALL VALVE TYPE 21	65mm - 100mm



At the bottom of the valve body, a "holed bottom stand" is provided which can be easily secured to a rack or panel only by inserting an Ensat.
★ Install the metal insert (Ensat) in the procedure below.

<When using the special tool>

Attach the Ensat at the end of special tool with the splitting groove facing downward.

While ensuring that the center is aligned with the prepared hole from the front, back, right and left, screw the Ensat in to the predetermined depth.

After the Ensat is screwed in completely, hold the nut with a spanner while turning the upper portion of the tool in the reverse direction. The tool will be freely movable and come out.

<When using a bolt and nut>

Screw the Ensat in in a double nut fashion. After the Ensat is screwed in, hold the bolt and loosen the nut. The bolt will be freely movable and can be removed.

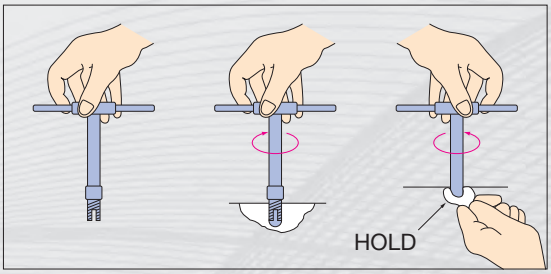

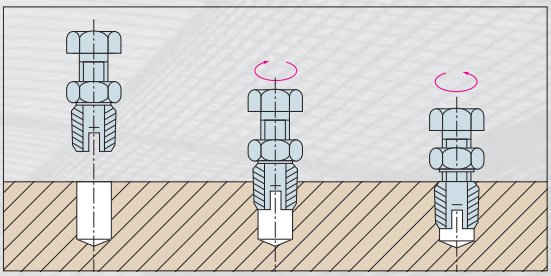

When the Ensat is manually screwed in, the center alignment between the Ensat and the prepared hole is particularly important. Check that the Ensat is inserted perpendicular to the prepared hole while screwing it in. If it is tilted, do not turn the tool backward, but just put the Ensat in its correct position. Note that, when nearly half of the Ensat is once inserted, its position can no longer be corrected.

NOTE For details of how to handle the Ensat mounting special tool, see the instruction manual provided by the Ensat manufacturer. (K.K.V.CORPORATION)

APPLICABLE ENSAT (REFERENCE)

SPEC.	SCREW SIZE	LENGTH (mm)
①	M5	10
②	M6	14
③	M8	15
④	M12	22

SIZE (mm)	15	20	25
14DV	①	①	①
21BV	①	①	①

SIZE (mm)	32	40	50
14DV	①	②	②
21BV	②	②	②

SIZE (mm)	65	80	100
14DV	③	④	④

BOTTOM STAND MOUNTING PROCEDURE

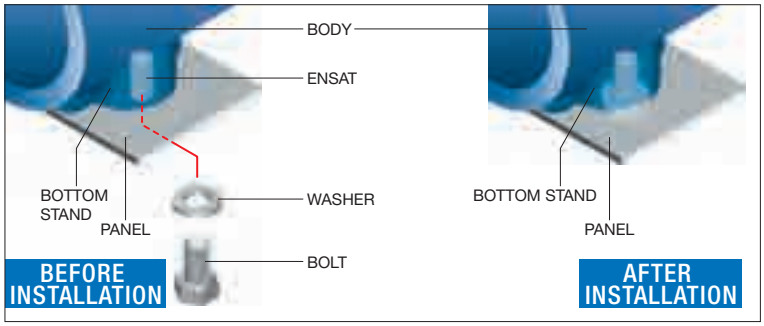

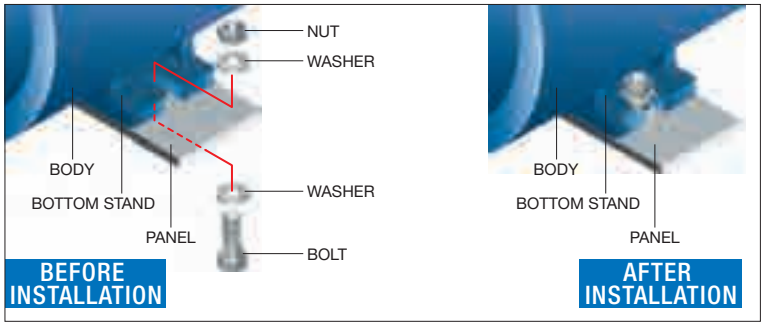

ASAHIAV

ASAHI AV
BUTTERFLY VALVE

P.073 BUTTERFLY VALVE TYPE 57

P.079 BUTTERFLY VALVE TYPE 56

P.083 BUTTERFLY VALVE TYPE 75

P.087 BUTTERFLY VALVE TYPE 56D, 75D

P.090 BUTTERFLY VALVE TYPE 58

P.091 BUTTERFLY VALVE TYPE 55

P.095 BUTTERFLY VALVE TYPE 55IS

P.097 LUG BUTTERFLY VALVE TYPE 57L

P.099 LUG BUTTERFLY VALVE TYPE 57TL

P.101 PDCPD LARGE SIZE BUTTERFLY VALVE

P.104 ROTARY DAMPER





BUTTERFLY VALVE LINEUP

VALVE CATEGORY	VALVE TYPE	1 1/2	2	2 1/2	3	4	5	6	8	10	12	14	16	18-24	28-48
		40	50	65	80	100	125	150	200	250	300	350	400	450-600	700-1,200
STANDARD (RUBBER SEAT)	TYPE 57	U-PVC/PP, PP/PP, PVDF/PVDF													
	TYPE 56												PP, PVDF		
	TYPE 75													PP, PVDF	
	PDCPD LARGE SIZE VALVE														PDCPD
	TYPE 56D, 75D TYPE 58												PP, PVDF (TYPE 56)	PP, PVDF (TYPE 75)	
	TYPE 57L (Lug type)				PDCPD/PP, PDCPD/PVDF										
	TYPE 57TL (True lug type)				U-PVC/PP										
CHEMICAL RESISTANT (PTFE seat)	TYPE 55		FCD-S/PTFE												
	TYPE 55IS (ISO face-to-face dimension)		FCD450/PTFE												
DAMPER	ROTARY DAMPER (TYPE 56, 57, 75)	U-PVC/PP, PP/PP, PVDF/PVDF (TYPE 57)											PP, PVDF (TYPE 56)	PP, PVDF (TYPE 75)	

AVAILABLE OPTIONS AUTOMATIC

* Options other than those listed below are also available. Contact us for inquiry.

	PNEUMATIC	ELECTRIC	
	TYPE TA (including damper)	TYPE T	TYPE S
SOLENOID VALVE (NAMUR)	●		
FILTER REGULATOR	●		
SPEED CONTROLLER	●	●	
BYPASS VALVE (WITH SPEED CONTROLLER)	●		
LIMIT SWITCH BOX	●		
LIMIT SWITCH	●		
OUTPUT CONTACT LIMIT SWITCH		STANDARD	●*1
INTERMEDIATE OUTPUT CONTACT LIMIT SWITCH		●	
PROXIMITY SWITCH	●		
E/P POSITIONER	●		
P/P POSITIONER	●		
E/E POSITIONER		●	●
MANUAL OPERATION LEVER	●		
MANUAL OVERRIDE	●	STANDARD	STANDARD
FULL OPENING ADJUSTMENT (OPENING DEGREE ADJUSTING BOLT)	●		
SPECIAL PAINTING (ACTUATOR ONLY)	●	●	●
SPECIAL FITTING (STAINLESS STEEL)	●	●	
SPACE HEATER		STANDARD	STANDARD
POTENTIOMETER		●	●
R/I TRANSMITTER			●

*1. Provided as standard for 250 mm or less.



LIMIT SWITCH BOX



FULL OPENING ADJUSTMENT (OPENING DEGREE ADJUSTING BOLT)



POSITIONER

BUTTERFLY VALVE TYPE 57

- HIGH DURABILITY AND FLOW CHARACTERISTICS IN ADDITION TO EXCELLENT OPERABILITY THANKS TO 19-STEP FINE OPENING ADJUSTMENT
- PLASTIC GEAR BOX WITH EXCELLENT CORROSION RESISTANCE
- EASY SWITCHING FROM LEVER TYPE TO GEAR TYPE OR AUTOMATIC VALVE
- HANDLE LEVER OPEN/CLOSE DIRECTION CAN BE CHANGED.



BASIC SPECIFICATIONS

VALVE TYPE——**BUTTERFLY VALVE TYPE 57**
SIZE / LEVER TYPE——**40 mm—200 mm (1 1/2 inch—8 inch)**
GEAR TYPE——**40 mm—350 mm (1 1/2 inch—14 inch)**
BODY MATERIAL——**U-PVC PP PVDF**
SEAL MATERIAL / SEAT——**EPDM FKM etc.**
CONNECTION / WAFER——**JIS10K, JIS5K, DIN, ANSI**
HIGH PURITY SERIES——**WETTED PARTS LUBRICANT FREE**

	FLUID TEMPERATURE	MAXIMUM WORKING PRESSURE (NORMAL TEMPERATURE) MPa{kgf/cm²}	
		40mm—250mm	300mm, 350mm
U-PVC	0℃～ 50℃	1.0 {10.2}	0.75 {7.7}
PP	-20℃～ 80℃	1.0 {10.2}	0.75 {7.7}
PVDF	-20℃～120℃	1.0 {10.2}	0.75 {7.7}

NOTE The maximum working pressure is the value including the water hammer pressure. Be careful that the maximum working pressure is not exceeded during use.
* Concerning the allowable pressure for each temperature and material, see the technical documents at the end of this catalog.

PARTS LIST MANUAL

[LEVER TYPE]

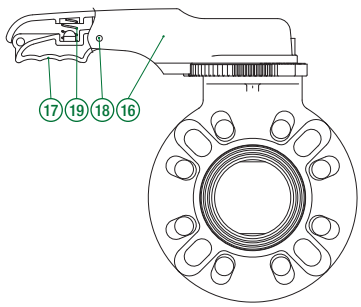

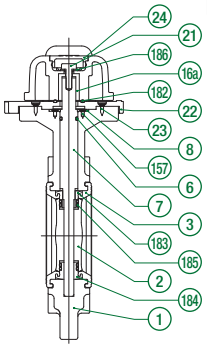

[GEAR TYPE]

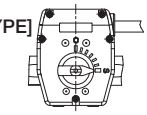

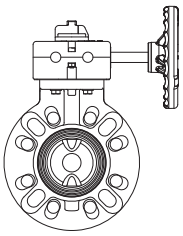

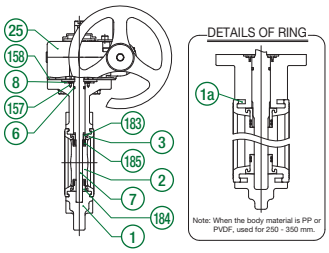

PART NO. / NAME	QTY	MATERIAL
1 BODY		BODY ——— DISC / SEAT BUSH U-PVC——— PP PP——— PP PVDF——— PVDF
2 DISC	1	
183 SEAT BUSH (A)	1	
184 SEAT BUSH (B)	1	
3 SEAT	1	EPDM, FKM, etc.
6 O-RING (C)	1	
185 O-RING (I)	4	
7 STEM	1	SUS403, SUS316
8 STEM HOLDER (A)	1	PP
157 SET SCREW (F)	4	SUS304

ONLY USED FOR LEVER TYPE

PART NO. / NAME	QTY	MATERIAL
16 HANDLE (A)	1	PP
16a EMBEDDED HANDLE FITTING	1	SUS316L
17 HANDLE LEVER	1	PPG
18 PIN	1	PPG
19 SPRING	1	SUS304
21 BOLT (B)	1	SUS304

PART NO. / NAME	QTY	MATERIAL
22 LOCKING PLATE	1	PPG
23 SET SCREW (B)	4	SUS304
24 CAP (A)	1	PP
182 O-RING (H)	1	EPDM
186 WASHER WITH RUBBER	1	SUS304+EPDM

ONLY USED FOR GEAR TYPE

PART NO. / NAME	QTY	MATERIAL
25 GEAR BOX	1	RESIN, etc.
28 BOLT (C)	4	SUS304
158 GASKET (L)	1	EPDM
1a RING	2	SS400 (Unichrome plating) When the body material is PP or PVDF, used for 250 - 350 mm.

SPECIFICATION LIST MANUAL

LEVER TYPE	SIDE GEAR TYPE	TOP GEAR TYPE
○	○	○

CHAIN TYPE	LONG STEM TYPE	FLOAT TYPE	WITH LIMIT SWITCH
○	○	○	○

* For other specifications, contact our sales office in your area.

COMPATIBLE ACTUATOR AUTOMATIC

PNEUMATIC TYPE TA — For detailed specifications, see P.124

ELECTRIC TYPE T — For detailed specifications, see P.139

ELECTRIC TYPE S — For detailed specifications, see P.133, 135

PRODUCT MODEL CODE LIST

MANUAL

ACTUATION	TYPE	OPERATING SYSTEM	BODY MATERIAL	SEAL MATERIAL	CONNECTION	STANDARD	SIZE	HIGH PURITY SERIES
V	57	**	*	*	W	*	***	2
V MANUAL VALVE	57 TYPE 57	LV LEVER TYPE SG SIDE GEAR TYPE	U U-PVC P PP F PVDF	E EPDM V FKM	W WAFER	1 JIS10K 5 JIS5K W — D DIN A ANSI	040 40mm ~ 350 350mm	2 WETTED PARTS LUBRICANT FREE

PRODUCT MODEL CODE LIST

AUTOMATIC

ACTUATION	TYPE	ACTUATOR TYPE	ACTION / POWER SOURCE	BODY MATERIAL	SEAL MATERIAL	CONNECTION	STANDARD	SIZE	HIGH PURITY SERIES
A	57	*	*	*	*	W	*	***	2
A AUTOMATIC VALVE	57 TYPE 57	PNEUMATIC K TYPE TA ELECTRIC T TYPE T S TYPE S	PNEUMATIC F DOUBLE ACTING G AIR TO OPEN S AIR TO CLOSE ELECTRIC 1 Single-Phase 100V 2 Single-Phase 200V 3 Three-Phase AC200V 4 Three-Phase AC400V	U U-PVC P PP F PVDF	E EPDM V FKM	W WAFER	1 JIS10K 5 JIS5K W — D DIN A ANSI	040 40mm ~ 350 350mm	2 WETTED PARTS LUBRICANT FREE

MANUAL

BUTTERFLY VALVE TYPE 57

TYPE——V57LV, V57SG

CONNECTION / WAFER——JIS, DIN, ANSI

[LEVER TYPE]

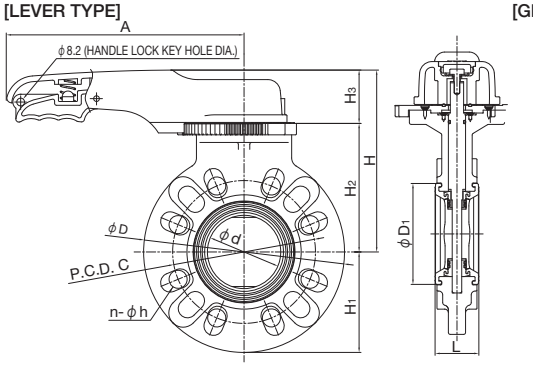

[GEAR TYPE]

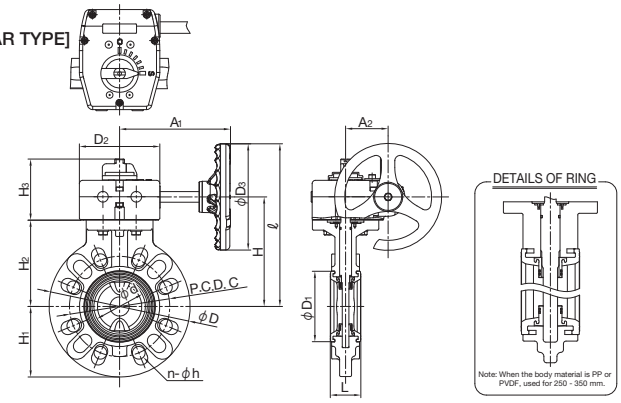

■ JIS, DIN (Unit: mm)

mm	d	D	D1	D2	D3	L	l	A	A1	A2	H		H1	H2		H3		JIS5K			JIS10K			WATERWORKS			DIN PN10		
											LEVER TYPE	GEAR TYPE		LEVER TYPE	GEAR TYPE	LEVER TYPE	GEAR TYPE	C	n	h	C	n	h	C	n	h	C	n	h
40	45	150	71	122	160	39	210	220	167	64	156	130	75	100	95	56	92	95	4	15	105	4	19	—	—	—	110	4	18
50	56	165	81	122	160	42	220	220	167	64	166	140	83	110	105	56	92	105	4	15	120	4	19	—	—	—	125	4	18
65	69	185	95	122	160	46	230	220	167	64	176	150	93	120	115	56	92	130	4	15	140	4	19	—	—	—	145	4	18
80(75)	77	211	105	122	160	46	245	250	167	64	191	165	106	135	130	56	92	145	4	19	150	8	19	—	—	—	160	8	18
100	102	238	134	122	160	56	260	250	167	64	206	180	119	150	145	56	92	165	8	19	175	8	19	—	—	—	180	8	18
125	129	255	169	122	160	66	275	320	167	64	237	195	128	168	160	69	92	200	8	19	210	8	23	—	—	—	210	8	18
150	150	285	190	122	160	71	290	320	167	64	252	210	143	183	175	69	92	230	8	19	240	8	23	—	—	—	240	8	22
200	195	350	242	122	160	87	321	400	167	64	283	241	170	214	206	69	92	280	8	23	290	12	23	—	—	—	295	8	22
250	250	421	302	122	160	112	356	—	167	64	—	276	211	—	241	—	92	345	12	23	355	12	25	—	—	—	350	12	22
300	303	488	360	188	300	129	490	—	272	99	—	340	244	—	298	—	108	390	12	23	400	16	25	—	—	—	400	12	22
350	351	539	393	188	300	129	517	—	272	99	—	367	270	—	325	—	108	435	12	23	445	16	25	—	—	—	460	16	22

■ ANSI (UNIT: inch)

inch	mm	d	D	D1	D2	D3	L	l	A	A1	A2	H		H1	H2		H3		ANSI CLASS 150			GEAR BOX TYPE
												LEVER TYPE	GEAR TYPE		LEVER TYPE	GEAR TYPE	LEVER TYPE	GEAR TYPE	C	n	h	
1 1/2	40	1.77	5.91	2.80	4.80	6.30	1.54	8.27	8.66	6.57	2.52	6.14	5.12	2.95	3.94	3.74	2.20	3.62	3.88	4	0.62	
2	50	2.20	6.50	3.19	4.80	6.30	1.65	8.66	8.66	6.57	2.52	6.54	5.51	3.27	4.33	4.13	2.20	3.62	4.75	4	0.75	
2 1/2	65	2.72	7.28	3.74	4.80	6.30	1.81	9.06	8.66	6.57	2.52	6.93	5.91	3.66	4.72	4.53	2.20	3.62	5.50	4	0.75	
3	80(75)	3.03	8.31	4.13	4.80	6.30	1.81	9.65	9.84	6.57	2.52	7.52	6.50	4.17	5.31	5.12	2.20	3.62	6.00	4	0.75	
4	100	4.02	9.37	5.28	4.80	6.30	2.20	10.24	9.84	6.57	2.52	8.11	7.09	4.69	5.91	5.71	2.20	3.62	7.50	8	0.75	TYPE1
5	125	5.08	10.04	6.65	4.80	6.30	2.60	10.83	12.60	6.57	2.52	9.33	7.68	5.04	6.61	6.30	2.72	3.62	8.50	8	0.88	
6	150	5.91	11.22	7.48	4.80	6.30	2.80	11.42	12.60	6.57	2.52	9.92	8.27	5.63	7.20	6.89	2.72	3.62	9.50	8	0.88	
8	200	7.68	13.78	9.53	4.80	6.30	3.43	12.64	15.75	6.57	2.52	11.14	9.49	6.69	8.43	8.11	2.72	3.62	11.75	8	0.88	
10	250	9.84	16.57	11.89	4.80	6.30	4.41	14.02	—	6.57	2.52	—	10.87	8.31	—	9.49	—	3.62	14.25	12	1.00	
12	300	11.93	19.21	14.17	7.40	11.81	5.08	19.29	—	10.71	3.90	—	13.39	9.61	—	11.73	—	4.25	17.00	12	1.00	TYPE3
14	350	13.82	21.22	15.47	7.40	11.81	5.08	20.35	—	10.71	3.90	—	14.45	10.63	—	12.80	—	4.25	18.75	12	1.12	

AUTOMATIC | PNEUMATIC | TYPE TA | DOUBLE ACTING | AIR TO OPEN | AIR TO CLOSE

BUTTERFLY VALVE TYPE 57

TYPE——A57K
CONNECTION / WAFER——JIS, DIN, ANSI

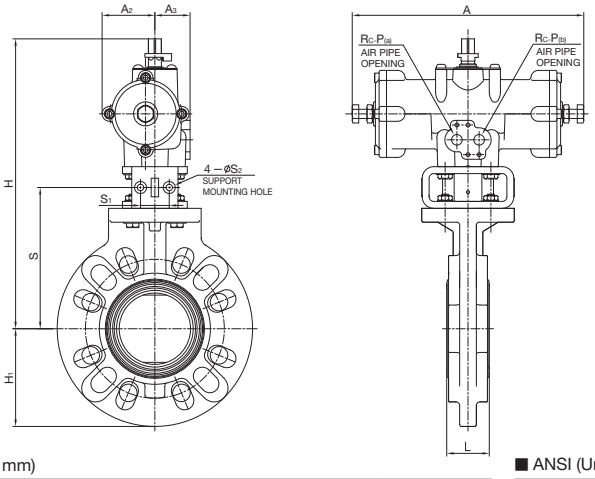

ACTUATOR SELECTION CHART

SIZE	ACTUATOR TYPE
40mm (1 1/2inch)	TA2A-050D
50mm (2inch)	
65mm (2 1/2inch)	TA2A-063D
80mm (3inch)	
100mm (4inch)	TA2A-080D
125mm (5inch)	TA2A-100D
150mm (6inch)	
200mm (8inch)	TA2A-125D
250mm (10inch)	TA2A-160D
300mm (12inch)	
350mm (14inch)	TA-200D

For detailed specifications, see P.124

■ JIS, DIN (Unit: mm)

mm	L	H	H1	A	A2	A3	S	S1	S2	P
40	39	263	75	210	46	36	117.5	32	7	1/4
50	42	273	83	210	46	36	127.5	32	7	1/4
65	46	298	93	250	57	38	137.5	32	7	1/4
80	46	313	106	250	57	38	152.5	32	7	1/4
100	56	361	119	292	71	45	167.5	32	7	1/4
125	66	413	128	362	85.5	57	185.5	42	9	1/4
150	71	428	143	362	85.5	57	200.5	42	9	1/4
200	87	493	175	440	90	60	—	—	—	1/4
250	112	584	211	532	113	68	—	—	—	1/4
300	129	641	244	532	113	68	—	—	—	1/4
350	129	732	270	664	139	68	—	—	—	3/8

■ ANSI (Unit: inch)

inch	mm	L	H	H1	A	A2	A3	S	S1	S2	P
1 1/2	40	1.54	10.35	2.95	8.27	1.81	1.42	4.63	1.26	0.28	1/4
2	50	1.65	10.75	3.27	8.27	1.81	1.42	5.02	1.26	0.28	1/4
2 1/2	65	1.81	11.73	3.66	9.84	2.24	1.50	5.41	1.26	0.28	1/4
3	80	1.81	12.32	4.17	9.84	2.24	1.50	6.00	1.26	0.28	1/4
4	100	2.20	14.21	4.69	11.50	2.80	1.77	6.59	1.26	0.28	1/4
5	125	2.60	16.26	5.04	14.25	3.37	2.24	7.30	1.65	0.35	1/4
6	150	2.80	16.85	5.63	14.25	3.37	2.24	7.89	1.65	0.35	1/4
8	200	3.43	19.41	6.89	17.32	3.54	2.36	—	—	—	1/4
10	250	4.41	22.99	8.31	20.94	4.45	2.68	—	—	—	1/4
12	300	5.08	25.24	9.61	20.94	4.45	2.68	—	—	—	1/4
14	350	5.08	28.82	10.63	26.14	5.47	2.68	—	—	—	3/8

AUTOMATIC | PNEUMATIC | TYPE TA | DOUBLE ACTING | AIR TO OPEN | AIR TO CLOSE

BUTTERFLY VALVE TYPE 57

TYPE——A57K
CONNECTION / WAFER——JIS, DIN, ANSI

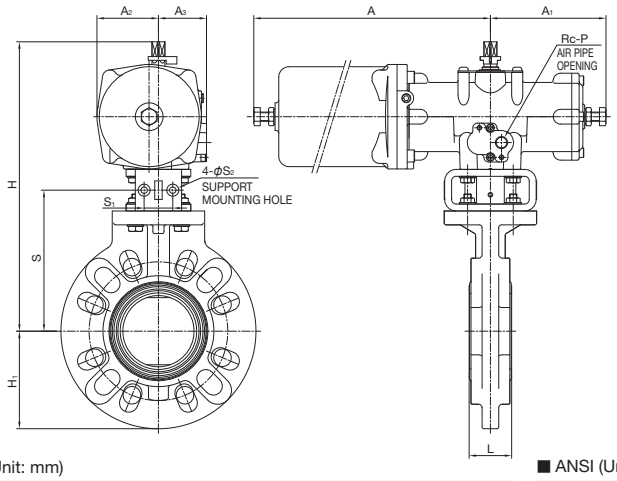

ACTUATOR SELECTION CHART

SIZE	ACTUATOR TYPE
40mm (1 1/2inch)	TA2A-050R
50mm (2inch)	
65mm (2 1/2inch)	TA2A-063R
80mm (3inch)	
100mm (4inch)	TA2A-080R
125mm (5inch)	TA2A-100R2
150mm (6inch)	
200mm (8inch)	TA2A-125R2
250mm (10inch)	TA2A-160R2
300mm (12inch)	
350mm (14inch)	TA-200R

For detailed specifications, see P.124

■ JIS, DIN (Unit: mm)

mm	L	H	H1	A	A1	A2	A3	S	S1	S2	P
40	39	263	75	240	105	53	50	117.5	32	7	1/4
50	42	273	83	240	105	53	50	127.5	32	7	1/4
65	46	298	93	288	125	66.5	52	137.5	32	7	1/4
80	46	313	106	288	125	66.5	52	152.5	32	7	1/4
100	56	361	119	341	146	82.5	59	167.5	32	7	1/4
125	66	413	128	417	181	103	71	185.5	42	9	1/4
150	71	428	143	417	181	103	71	200.5	42	9	1/4
200	87	493	175	542	220	118.5	74	—	—	—	1/4
250	112	584	211	658	266	149	82	—	—	—	1/4
300	129	641	244	658	266	149	82	—	—	—	1/4
350	129	732	270	943	332	182	118	—	—	—	3/8

■ ANSI (Unit: inch)

inch	mm	L	H	H1	A	A1	A2	A3	S	S1	S2	P
1 1/2	40	1.54	10.35	2.95	9.45	4.13	2.09	1.97	4.63	1.26	0.28	1/4
2	50	1.65	10.75	3.27	9.45	4.13	2.09	1.97	5.02	1.26	0.28	1/4
2 1/2	65	1.81	11.73	3.66	11.34	4.92	2.62	2.05	5.41	1.26	0.28	1/4
3	80	1.81	12.32	4.17	11.34	4.92	2.62	2.05	6.00	1.26	0.28	1/4
4	100	2.20	14.21	4.69	13.43	5.75	3.25	2.32	6.59	1.26	0.28	1/4
5	125	2.60	16.26	5.04	16.42	7.13	4.06	2.80	7.30	1.65	0.35	1/4
6	150	2.80	16.85	5.63	16.42	7.13	4.06	2.80	7.89	1.65	0.35	1/4
8	200	3.43	19.41	6.89	21.34	8.66	4.67	2.91	—	—	—	1/4
10	250	4.41	22.99	8.31	25.91	10.47	5.87	3.23	—	—	—	1/4
12	300	5.08	25.24	9.61	25.91	10.47	5.87	3.23	—	—	—	1/4
14	350	5.08	28.82	10.63	37.13	13.07	7.17	4.65	—	—	—	3/8

AUTOMATIC ELECTRIC TYPE T Single-Phase 100V • Single-Phase 200V

BUTTERFLY VALVE TYPE 57

TYPE——A57T

CONNECTION / WAFER——JIS, DIN, ANSI

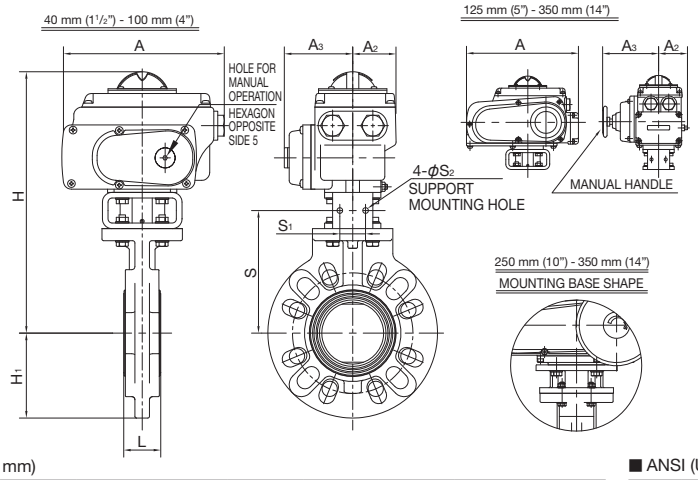

ACTUATOR SELECTION CHART

SIZE	ACTUATOR TYPE
40mm (1 1/2inch)	T-0
50mm (2inch)	
65mm (2 1/2inch)	
80mm (3inch)	
100mm (4inch)	
125mm (5inch)	T-1
150mm (6inch)	T-2
200mm (8inch)	T-2.5
250mm (10inch)	T-3
300mm (12inch)	
350mm (14inch)	

For detailed specifications, see P.139

■ JIS, DIN (Unit: mm)

mm	L	H	H1	A	A2	A3	S	S1	S2
40	39	290	75	202	53.8	85	117.5	32	7
50	42	300	83	202	53.8	85	127.5	32	7
65	46	310	93	202	53.8	85	137.5	32	7
80	46	325	106	202	53.8	85	152.5	32	7
100	56	340	119	202	53.8	85	167.5	32	7
125	66	376	128	252	65	126	185.5	42	9
150	71	424	143	310	85	154	200.5	42	9
200	87	458	175	310	85	154	231.5	42	9
250	112	541	211	388	136	245.5	—	—	—
300	129	598	244	388	136	245.5	—	—	—
350	129	625	270	388	136	245.5	—	—	—

■ ANSI (Unit: inch)

inch	mm	L	H	H1	A	A2	A3
1 1/2	40	1.54	11.42	2.95	7.95	2.12	3.35
2	50	1.65	11.81	3.27	7.95	2.12	3.35
2 1/2	65	1.81	12.20	3.66	7.95	2.12	3.35
3	80	1.81	12.80	4.17	7.95	2.12	3.35
4	100	2.20	13.39	4.69	7.95	2.12	3.35
5	125	2.60	14.80	5.04	9.92	2.56	4.96
6	150	2.80	16.69	5.63	12.20	3.35	6.06
8	200	3.43	18.03	6.89	12.20	3.35	6.06
10	250	4.41	21.30	8.31	15.28	5.35	9.67
12	300	5.08	23.54	9.61	15.28	5.35	9.67
14	350	5.08	24.61	10.63	15.28	5.35	9.67

AUTOMATIC ELECTRIC TYPE S Three-Phase AC200V • Three-Phase AC400V

BUTTERFLY VALVE TYPE 57

TYPE——A57S

CONNECTION / WAFER——JIS, DIN, ANSI

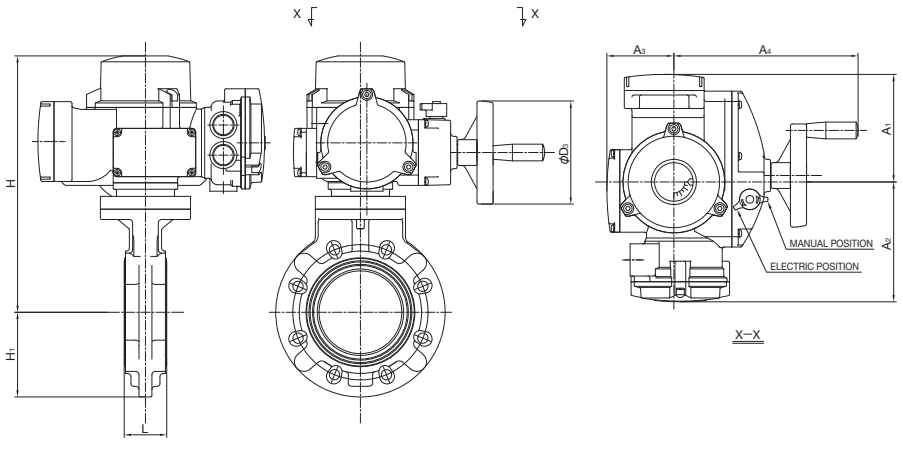

ACTUATOR SELECTION CHART

SIZE	ACTUATOR TYPE
40mm (1 1/2inch)	SRJ-010
50mm (2inch)	
65mm (2 1/2inch)	
80mm (3inch)	
100mm (4inch)	
125mm (5inch)	SRJ-020
150mm (6inch)	
200mm (8inch)	SRJ-060
250mm (10inch)	

For detailed specifications, see P.133

■ JIS, DIN (Unit: mm)

mm	L	D3	H	H1	A1	A2	A3	A4
40	39	160	313	75	167	186	104	286
50	42	160	323	83	167	186	104	286
65	46	160	333	93	167	186	104	286
80	46	160	348	106	167	186	104	286
100	56	160	363	119	167	186	104	286
125	66	160	398	128	167	186	104	286
150	71	160	413	143	167	186	104	286
200	87	245	441	175	191	202	130	330
250	112	245	476	211	191	202	130	330

■ ANSI (Unit: inch)

inch	mm	L	D3	H	H1	A1	A2	A3	A4
1 1/2	40	1.54	6.30	12.32	2.95	6.57	7.32	4.09	11.26
2	50	1.65	6.30	12.72	3.27	6.57	7.32	4.09	11.26
2 1/2	65	1.81	6.30	13.11	3.66	6.57	7.32	4.09	11.26
3	80	1.81	6.30	13.70	4.17	6.57	7.32	4.09	11.26
4	100	2.20	6.30	14.29	4.69	6.57	7.32	4.09	11.26
5	125	2.60	6.30	15.67	5.04	6.57	7.32	4.09	11.26
6	150	2.80	6.30	16.26	5.63	6.57	7.32	4.09	11.26
8	200	3.43	9.65	17.36	6.89	7.52	7.95	5.12	12.99
10	250	4.41	9.65	18.74	8.31	7.52	7.95	5.12	12.99

AUTOMATIC ELECTRIC TYPE S Three-Phase AC200V • Three-Phase AC400V

BUTTERFLY VALVE TYPE 57

TYPE——A57S
CONNECTION / WAFER——JIS, DIN, ANSI

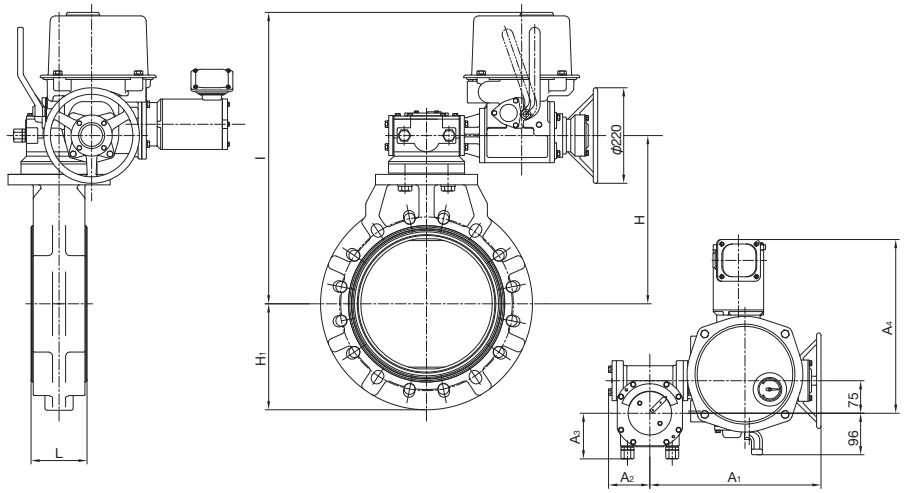

ACTUATOR SELECTION CHART

SIZE	ACTUATOR TYPE
300mm (12inch)	LTRM-01/BRM1 (AUTOMATIC RETURN MECHANISM) or LTRH-01/BRM1 (MANUAL RETURN MECHANISM)
350mm (14inch)	

For detailed specifications, see P.135

■ JIS, DIN (Unit: mm)

mm	L	H	H1	I	A1	A2	A3	A4
300	129	387	244	671	394	95	105	400
350	129	414	270	698	394	95	105	400

■ ANSI (Unit: inch)

inch	mm	L	H	H1	I	A1	A2	A3	A4
12	300	5.08	15.24	9.61	26.42	15.51	3.74	4.13	15.75
14	350	5.08	16.30	10.63	27.48	15.51	3.74	4.13	15.75



ASAHIAV

BUTTERFLY VALVE TYPE 56

• EASY SWITCHING FROM GEAR TYPE TO AUTOMATIC VALVE

BASIC SPECIFICATIONS

VALVE TYPE——**BUTTERFLY VALVE TYPE 56**

SIZE——**400 mm (16 inch)**

BODY MATERIAL——PP PVDF

SEAL MATERIAL / SEAT——EPDM FKM **etc.**

CONNECTION / WAFER——**JIS10K, DIN, ANSI**

	FLUID TEMPERATURE	MAXIMUM WORKING PRESSURE (NORMAL TEMPERATURE) MPa{kgf/cm²} 400mm
PP	-20℃～ 80℃	0.6 {6.1}
PVDF	-20℃～120℃	0.6 {6.1}

NOTE The maximum working pressure is the value including the water hammer pressure. Be careful that the maximum working pressure is not exceeded during use.

* Concerning the allowable pressure for each temperature and material, see the technical documents at the end of this catalog.



PARTS LIST MANUAL

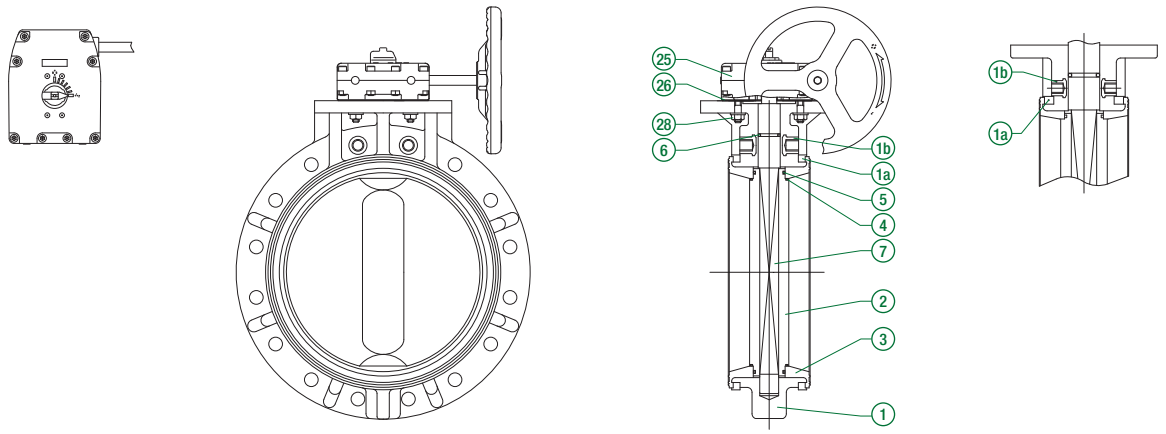

PART NO. / NAME	QTY	MATERIAL
①BODY	1	BODY—DISC PP—PP PVDF—PVDF
②DISC	1	
③SEAT	1	EPDM, FKM, etc.
④O-RING (A)	2	EPDM, FKM, etc.

PART NO. / NAME	QTY	MATERIAL
⑤O-RING (B)	2	EPDM, FKM, etc.
⑥O-RING (C)	1	EPDM, FKM, etc.
⑦STEM	1	SUS403
㉕GEAR BOX	1	RESIN, etc.

PART NO. / NAME	QTY	MATERIAL
㉖GASKET (A)	1	EPDM
㉘BOLT (C)	1	SUS304
1aRING	2	SS400 (EPOXY POWDER COATING)
1bEMBEDDED BODY FITTING	1	C3604

SPECIFICATION LIST MANUAL

LEVER TYPE	SIDE GEAR TYPE	TOP GEAR TYPE
—	○	○

CHAIN TYPE	LONG STEM TYPE	FLOAT TYPE	WITH LIMIT SWITCH
○	○	○	○

* For other specifications, contact our sales office in your area.

COMPATIBLE ACTUATOR AUTOMATIC

PNEUMATIC TYPE TA For detailed specifications, see P.124

ELECTRIC TYPE S For detailed specifications, see P.135

PRODUCT MODEL CODE LIST

MANUAL

ACTUATION	TYPE	OPERATING SYSTEM	BODY MATERIAL	SEAL MATERIAL	CONNECTION	STANDARD	SIZE
V	56	SG	*	*	W	*	400
V MANUAL VALVE	56 TYPE 56	SG SIDE GEAR TYPE	P PP F PVDF	E EPDM V FKM	W WAFER	1 JIS10K W — D DIN A ANSI	400 400mm

PRODUCT MODEL CODE LIST

AUTOMATIC

ACTUATION	TYPE	ACTUATOR TYPE	ACTION / POWER SOURCE	BODY MATERIAL	SEAL MATERIAL	CONNECTION	STANDARD	SIZE
A	56	*	*	*	*	W	*	400
A AUTOMATIC VALVE	56 TYPE 56	PNEUMATIC K TYPE TA ELECTRIC S TYPE S	PNEUMATIC F DOUBLE ACTING G AIR TO OPEN S AIR TO CLOSE ELECTRIC 3 Three-Phase AC200V 4 Three-Phase AC400V	P PP F PVDF	E EPDM V FKM	W WAFER	1 JIS10K W — D DIN A ANSI	400 400mm

MANUAL

BUTTERFLY VALVE TYPE 56

TYPE——V56SG

CONNECTION / WAFER——JIS, DIN, ANSI

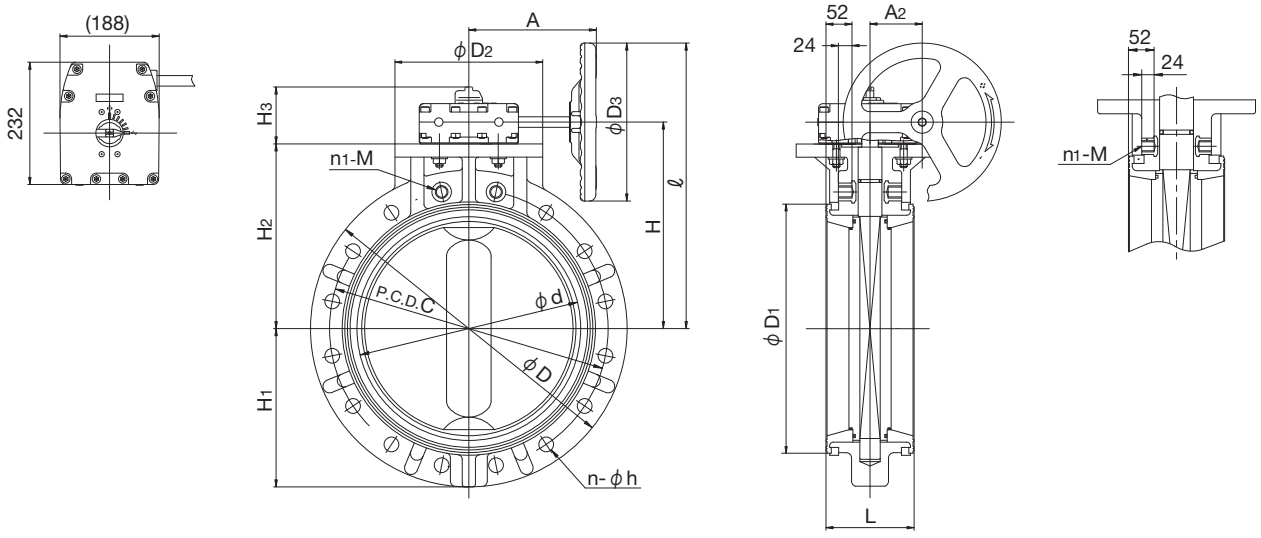

■ JIS, DIN (Unit: mm)

mm	d	D	D1	D2	D3	L	H	H1	H2	H3	ℓ	A	A2	JIS10K C	JIS10K n	JIS10K h	JIS10K n1	JIS10K M	WATERWORKS C	WATERWORKS n	WATERWORKS h	DIN PN10 C	DIN PN10 n	DIN PN10 h	HANDLE ROTATION
400	406	600	470	235	300	169	390	300	350	108	540	272	99.2	510	14	27	2	M24	—	—	—	515	16	26	9.5

■ ANSI (Unit: inch)

inch	mm	d	D	D1	D2	D3	L	H	H1	H2	H3	ℓ	A	A2	ANSI CLASS 150 C	ANSI CLASS 150 n	ANSI CLASS 150 h	HANDLE ROTATION	GEAR BOX TYPE
16	400	15.98	23.62	18.50	9.25	11.81	6.65	15.35	11.81	13.78	4.25	21.26	10.71	3.91	21.25	16	1.12	9.5	TYPE3

AUTOMATIC PNEUMATIC TYPE TA DOUBLE ACTING AIR TO OPEN AIR TO CLOSE

BUTTERFLY VALVE TYPE 56

TYPE——A56K
CONNECTION / WAFER——JIS, DIN, ANSI

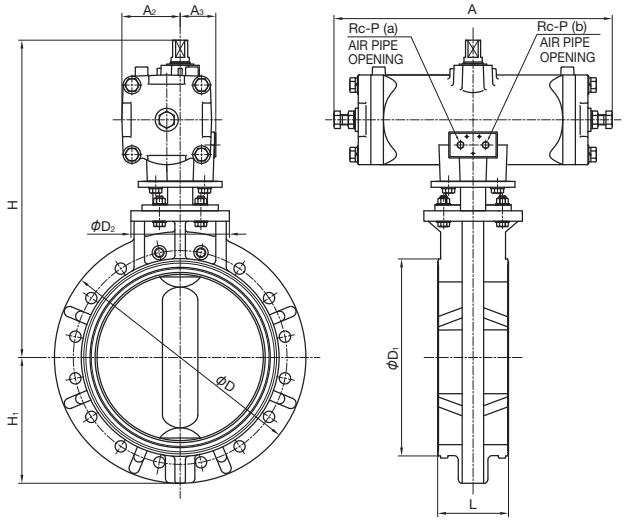

ACTUATOR SELECTION CHART

SIZE	ACTUATOR TYPE
400mm (16 inch)	TA-200D

For detailed specifications, see P.124

■ JIS, DIN (Unit: mm)

mm	L	D	D1	D2	H	H1	A	A2	A3	P
400	169	600	470	235	757	300	664	139	85	3/8

■ ANSI (Unit: inch)

inch	mm	L	D	D1	D2	H	H1	A	A2	A3	P
16	400	6.65	23.62	18.50	9.25	29.80	11.81	26.14	5.47	3.35	3/8

AUTOMATIC PNEUMATIC TYPE TA DOUBLE ACTING AIR TO OPEN AIR TO CLOSE

BUTTERFLY VALVE TYPE 56

TYPE——A56K
CONNECTION / WAFER——JIS, DIN, ANSI

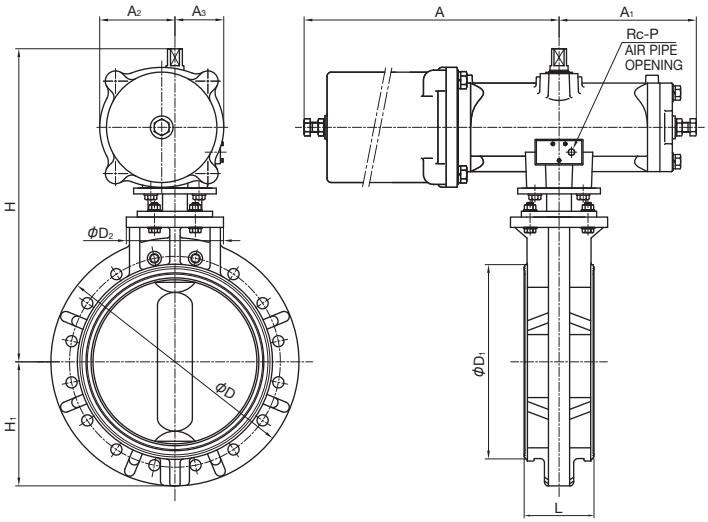

ACTUATOR SELECTION CHART

SIZE	ACTUATOR TYPE
400mm (16inch)	TA-200R

For detailed specifications, see P.124

■ JIS, DIN (Unit: mm)

mm	L	D	D1	D2	H	H1	A	A1	A2	A3	P
400	169	600	470	235	757	300	943	332	182	118	3/8

■ ANSI (Unit: inch)

inch	mm	L	D	D1	D2	H	H1	A	A1	A2	A3	P
16	400	6.65	23.62	18.50	9.25	29.80	11.81	37.13	13.07	7.17	4.65	3/8

AUTOMATIC ELECTRIC TYPE S Three-Phase AC200V • Three-Phase AC400V

BUTTERFLY VALVE TYPE 56

TYPE——A56S
CONNECTION / WAFER——JIS, DIN, ANSI

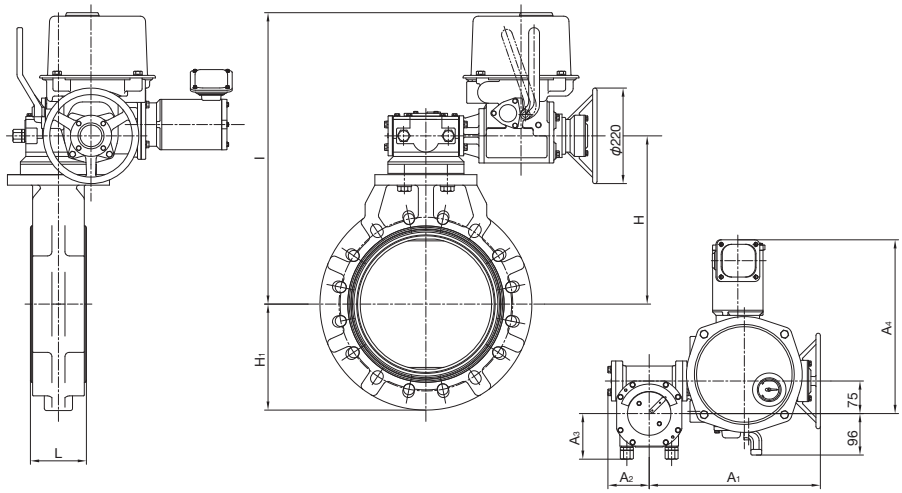

ACTUATOR SELECTION CHART

SIZE	ACTUATOR TYPE
400mm (16inch)	LTRM-01/BRM2 (AUTOMATIC RETURN MECHANISM) or LTRH-01/BRM2 (MANUAL RETURN MECHANISM)

For detailed specifications, see P.135

■ JIS, DIN (Unit: mm)

mm	L	D_3	H	H_1	A_1	A_2	A_3	A_4
400	169	433	300	717	430	116	126	409

■ ANSI (Unit: inch)

inch	mm	L	D_3	H	H_1	A_1	A_2	A_3	A_4
16	400	6.65	17.05	11.81	28.23	16.93	4.57	4.96	16.10

BUTTERFLY VALVE TYPE 75

• SMALL FACE-TO-FACE DIMENSION FACILITATES MOUNTING ON PIPING.

BASIC SPECIFICATIONS

VALVE TYPE——**BUTTERFLY VALVE TYPE 75**

SIZE——**450 mm—600 mm (18 inch—24 inch)**

BODY MATERIAL——**PP** **PVDF**

SEAL MATERIAL / SEAT——**EPDM** **FKM** **etc.**

CONNECTION / WAFER—**JIS10K, DIN, ANSI**

	FLUID TEMPERATURE	MAXIMUM WORKING PRESSURE (NORMAL TEMPERATURE) MPa{kgf/cm²}	
		450mm	500 mm, 600 mm
PP	-20℃～ 80℃	0.5 {5.1}	0.35 {3.6}
PVDF	-20℃～120℃		

NOTE The maximum working pressure is the value including the water hammer pressure. Be careful that the maximum working pressure is not exceeded during use.

* Concerning the allowable pressure for each temperature and material, see the technical documents at the end of this catalog.

MANUAL



AUTOMATIC



PARTS LIST MANUAL

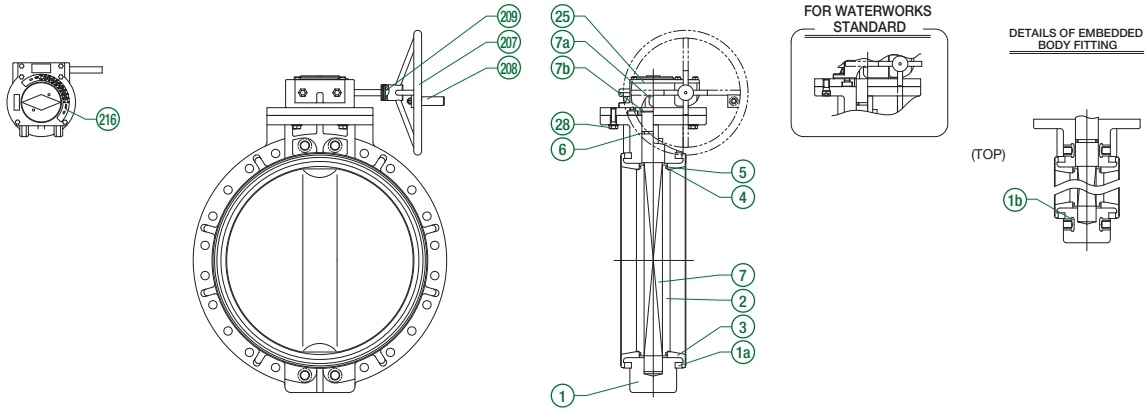

PART NO. / NAME	QTY	MATERIAL
1 BODY	1	PP, PVDF
2 DISC	1	PP, PVDF
3 SEAT	1	EPDM, FKM, etc.
4 O-RING (A)	2	EPDM, FKM, etc.
5 O-RING (B)	2	EPDM, FKM, etc.
6 O-RING (C)	1	EPDM, FKM, etc.

PART NO. / NAME	QTY	MATERIAL
7 STEM	1	SUS403
7a KEY (A)	1	S45C
7b C-SHAPED STOP RING	1	Used for SUS304 450 mm.
25 GEAR BOX	1	FC250, etc. by Rotork (EPOXY PAINT)
28 BOLT (C)	4	SUS304
207 HANDLE (C)	1	FC250 (POLYURETHANE PAINT)

PART NO. / NAME	QTY	MATERIAL
208 HANDLE GRIP	1	NYLON, etc.
209 SPRING PIN	1	SUS304
216 OPENING DEGREE DISPLAY PLATE	1	SUS304
1a RING	2	SS400 (EPOXY POWDER COATING)
1b EMBEDDED BODY FITTING(1)	8	C3604

NOTE (1) Only used for JIS10K standard.

SPECIFICATION LIST MANUAL

LEVER TYPE	SIDE GEAR TYPE	TOP GEAR TYPE
—	○	○

CHAIN TYPE	LONG STEM TYPE	FLOAT TYPE	WITH LIMIT SWITCH
○	○	○	○

* For other specifications, contact our sales office in your area.

COMPATIBLE ACTUATOR AUTOMATIC

PNEUMATIC TYPE TW For detailed specifications, see P.124

ELECTRIC TYPE S For detailed specifications, see P.135

PRODUCT MODEL CODE LIST

MANUAL

ACTUATION	TYPE	OPERATING SYSTEM	BODY MATERIAL	SEAL MATERIAL	CONNECTION	STANDARD	SIZE
V	75	SG	*	*	W	*	***
V MANUAL VALVE	75 TYPE 75	SG SIDE GEAR TYPE	P PP F PVDF	E EPDM V FKM	W WAFER	1 JIS10K W — D DIN A ANSI	450 450mm ~ 600 600mm

PRODUCT MODEL CODE LIST

AUTOMATIC

ACTUATION	TYPE	ACTUATOR TYPE	ACTION / POWER SOURCE	BODY MATERIAL	SEAL MATERIAL	CONNECTION	STANDARD	SIZE
A	75	*	*	*	*	W	*	***
A AUTOMATIC VALVE	75 TYPE 75	PNEUMATIC K TYPE TW ELECTRIC S TYPE S	PNEUMATIC F DOUBLE ACTING ELECTRIC 3 Three-Phase AC200V 4 Three-Phase AC400V	P PP F PVDF	E EPDM V FKM	W WAFER	1 JIS10K W — D DIN A ANSI	450 450mm ~ 600 600mm

MANUAL

BUTTERFLY VALVE TYPE 75

TYPE——V75SG

CONNECTION / WAFER——JIS, DIN, ANSI

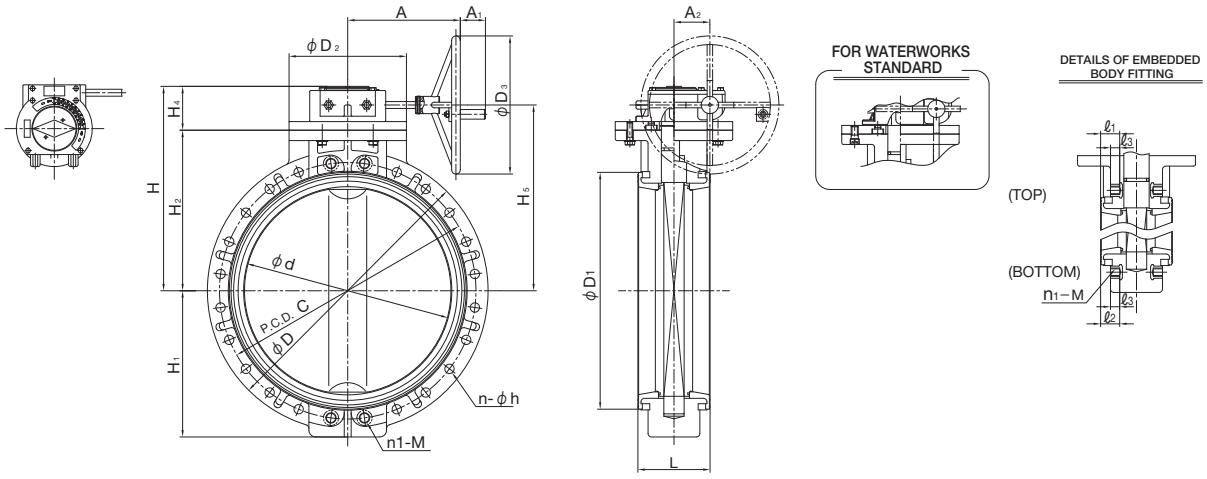

■ JIS, DIN (Unit: mm)

mm	d	D PP	D PVDF	D1	D2	D3	L	H	H1	H2	H4	H5	A	A1	A2	OPEN/CLOSE ROTATION	JIS10K C	JIS10K n	JIS10K h	JIS10K n1	JIS10K M	WATERWORKS C	WATERWORKS n	WATERWORKS h	DIN PN10 C	DIN PN10 n	DIN PN10 h
450	452	633	630	525	340	400	179	497	315	370	127	443	326	75.5	104.5	13.75	565	16	27	4	M24	—	—	—	565	20	26
500	502	683	680	575	340	400	190	527	350	400	127	473	326	75.5	104.5	13.75	620	16	27	4	M24	—	—	—	620	20	26
600	603	793	790	686	340	400	209	592	424	465	127	538	326	75.5	104.5	13.75	730	20	33	4	M30	—	—	—	725	20	30

■ JIS10K (UNIT: mm)

mm	d	THRU HOLE n	NO. OF FITTINGS USED TOP	NO. OF FITTINGS USED BOTTOM	NO. OF FITTINGS USED TOTAL 2 x n1	ℓ1	ℓ2	ℓ3
450	M24	16	2×2	2×2	8	49	54	24
500	M24	16	2×2	2×2	8	49	59	24
600	M30	20	2×2	2×2	8	64	64	30

■ ANSI (Unit: inch)

inch	mm	d	D PP	D PVDF	D1	D2	D3	L	H	H1	H2	H4	H5	A	A1	A2	OPEN/CLOSE ROTATION	ANSI CLASS 150 C	ANSI CLASS 150 n	ANSI CLASS 150 h
18	450	17.80	24.92	24.80	20.67	13.39	15.75	7.05	19.57	12.40	14.57	5.00	17.44	12.83	2.97	4.11	13.75	22.75	16	1.25
20	500	19.76	26.89	26.77	22.64	13.39	15.75	7.48	20.75	13.78	15.75	5.00	18.62	12.83	2.97	4.11	13.75	25.00	20	1.25
24	600	23.74	31.22	31.10	27.01	13.39	15.75	8.23	23.31	16.69	18.31	5.00	21.18	12.83	2.97	4.11	13.75	29.50	20	1.38

AUTOMATIC | PNEUMATIC | TYPE TW | DOUBLE ACTING | AIR TO OPEN | AIR TO CLOSE

BUTTERFLY VALVE TYPE 75

TYPE——A75K
CONNECTION / WAFER——JIS, DIN, ANSI

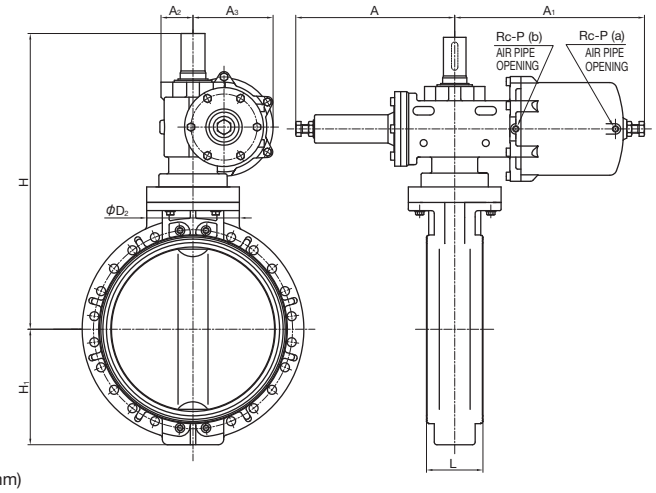

ACTUATOR SELECTION CHART

SIZE	ACTUATOR TYPE
450mm (18inch)	TW-250D
500mm (20inch)	
600mm (24inch)	

For detailed specifications, see P.124

■ JIS, DIN (Unit: mm)

mm	L	D1	D2	H	H1	A	A1	A2	A3	P
450	179	525	340	825	315	450	537	88	214	3/8
500	190	575	340	855	350	450	537	88	214	3/8
600	209	686	340	920	424	450	537	88	214	3/8

■ ANSI (Unit: inch)

inch	mm	L	D1	D2	H	H1	A	A1	A2	A3	P
18	450	7.05	20.67	13.39	32.48	12.40	17.72	21.14	3.46	8.43	3/8
20	500	7.48	22.64	13.39	33.66	13.78	17.72	21.14	3.46	8.43	3/8
24	600	8.23	27.01	13.39	36.22	16.69	17.72	21.14	3.46	8.43	3/8

AUTOMATIC | ELECTRIC | TYPE S | Three-Phase AC200V • Three-Phase AC400V

BUTTERFLY VALVE TYPE 75

TYPE——A75S
CONNECTION / WAFER——JIS, DIN, ANSI

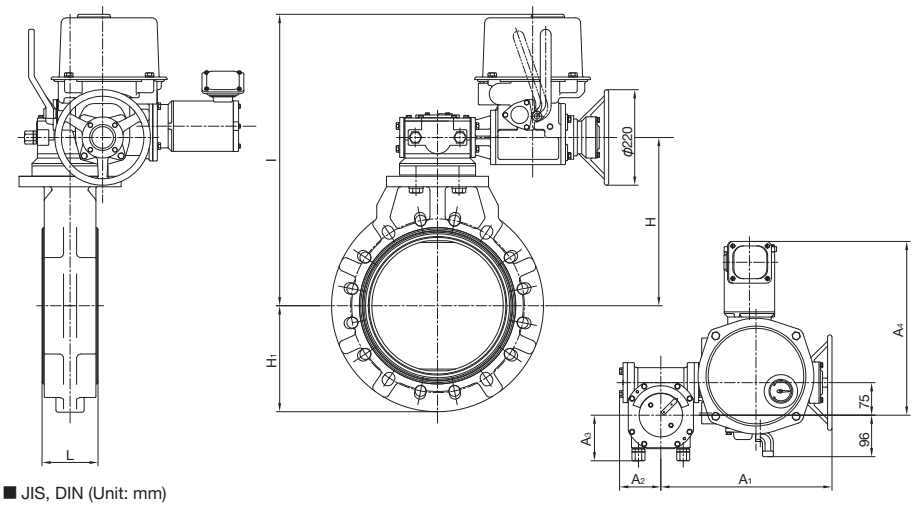

ACTUATOR SELECTION CHART

SIZE	ACTUATOR TYPE
450mm (18inch)	LTRM-01/BRM2 (AUTOMATIC RETURN MECHANISM) or LTRH-01/BRM2 (MANUAL RETURN MECHANISM)
500mm (20inch)	
600mm (24inch)	

For detailed specifications, see P.135

■ JIS, DIN (Unit: mm)

mm	L	D3	H	H1	A1	A2	A3	A4
450	179	468	315	752	430	116	126	409
500	190	498	350	782	430	116	126	409
600	209	563	424	847	430	116	126	409

■ ANSI (Unit: inch)

inch	mm	L	D3	H	H1	A1	A2	A3	A4
18	450	7.05	18.43	12.40	29.61	16.93	4.57	4.96	16.10
20	500	7.48	19.61	13.78	30.79	16.93	4.57	4.96	16.10
24	600	8.23	22.17	16.69	33.35	16.93	4.57	4.96	16.10

BUTTERFLY VALVE TYPE 56D, 75D

• USE OF PDCPD BODY IMPROVED PRESSURE RESISTANCE PERFORMANCE.

BASIC SPECIFICATIONS

VALVE TYPE——**BUTTERFLY VALVE TYPE 56D, 75D**

SIZE——**400 mm—600 mm (16 inch—24 inch)**

BODY MATERIAL——**PDCPD**

SEAL MATERIAL / SEAT—**EPDM** **FKM**

CONNECTION / WAFER —**JIS10K, DIN, ANSI**

	FLUID TEMPERATURE	MAXIMUM WORKING PRESSURE (NORMAL TEMPERATURE) MPa{kgf/cm²} FOR WAFER
PDCPD (DISC MATERIAL— PP)	-20℃～ 90℃	0.75 {7.7}
PDCPD (DISC MATERIAL— PVDF)	-20℃～100℃	0.75 {7.7}

NOTE The maximum working pressure is the value including the water hammer pressure. Be careful that the maximum working pressure is not exceeded during use.

* Concerning the allowable pressure for each temperature and material, see the technical documents at the end of this catalog.

MANUAL



AUTOMATIC

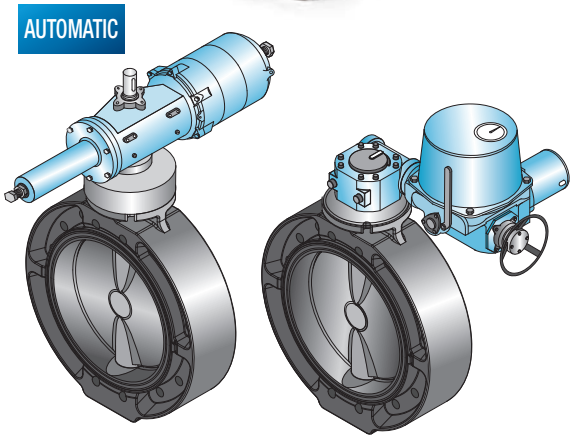

PARTS LIST MANUAL

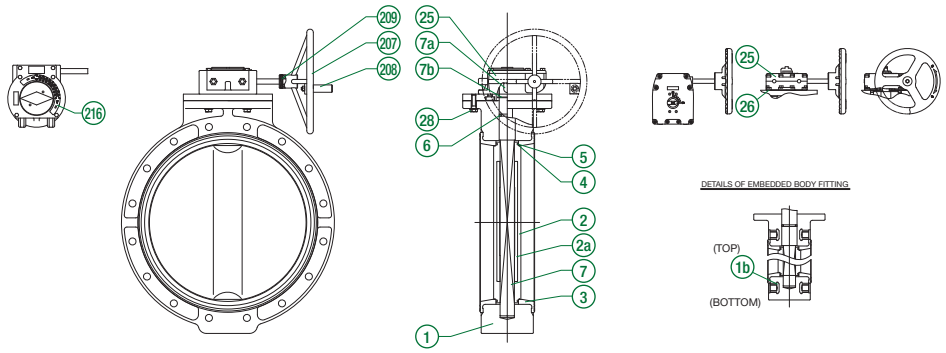

PART NO. / NAME	QTY	MATERIAL	MEMO
1 BODY	1	PDCPD	
1b EMBEDDED BODY FITTING	8	C3604	JIS10K 450mm—600mm
	4	C3604	JIS10K 400mm
2 DISC	1	PP, PVDF	
2a DISC INSERT	1	AC4C	450mm—600mm
3 SEAT	1	EPDM, FKM, etc.	
4 O-RING (A)	2		
5 O-RING (B)	2		
6 O-RING (C)	1		
7 STEM	1	SUS403	

PART NO. / NAME	QTY	MATERIAL	MEMO
7a KEY (A)	1	S45C	
7b C-SHAPED STOP RING	1	SUS304	450mm
25 GEAR BOX	1	FC250, etc. (POLYURETHANE PAINT)	450mm—600mm
		RESIN, etc.	400mm
26 GASKET (A)	1	EPDM	400mm
28 BOLT (C)	4	SUS304	
207 HANDLE (C)	1	FC250	(POLYURETHANE PAINT)
208 HANDLE GRIP	4	NYLON, etc.	
209 SPRING PIN		SUS304	
216 OPENING DEGREE DISPLAY PLATE	1	SUS304	

SPECIFICATION LIST MANUAL

LEVER TYPE	SIDE GEAR TYPE	TOP GEAR TYPE
—	○	○

CHAIN TYPE	LONG STEM TYPE	FLOAT TYPE	WITH LIMIT SWITCH
○	○	—	○

* For other specifications, contact our sales office in your area.

COMPATIBLE ACTUATOR AUTOMATIC

PNEUMATIC TYPE TW For detailed specifications, see P.124

ELECTRIC TYPE S For detailed specifications, see P.135

PRODUCT MODEL CODE LIST

MANUAL

ACTUATION	TYPE	OPERATING SYSTEM	BODY MATERIAL	SEAL MATERIAL	CONNECTION	STANDARD	SIZE	DISC PVDF
V	**	SG	D	*	W	*	***	OOQ※
V MANUAL VALVE	56 TYPE 56D 75 TYPE 75D	SG SIDE GEAR TYPE	D PDCPD	E EPDM V FKM	W WAFER	1 JIS10K W — D DIN A ANSI	400 400mm ≀ 600 600mm	* Used when the disc material is PVDF.

PRODUCT MODEL CODE LIST

AUTOMATIC

ACTUATION	TYPE	ACTUATOR TYPE	ACTION / POWER SOURCE	BODY MATERIAL	SEAL MATERIAL	CONNECTION	STANDARD	SIZE
A	**	*	*	D	E	W	*	***
A AUTOMATIC VALVE	56 TYPE 56D 75 TYPE 75D	PNEUMATIC K TYPE TW ELECTRIC S TYPE S	PNEUMATIC F DOUBLE ACTING ELECTRIC 3 Three-Phase AC200V 4 Three-Phase AC400V	D PDCPD	E EPDM	W WAFER	1 JIS10K W — D DIN A ANSI	400 400mm ≀ 600 600mm

MANUAL

BUTTERFLY VALVE TYPE 56D, 75D

TYPE——V56SG, V75SG

CONNECTION / WAFER——JIS, DIN, ANSI

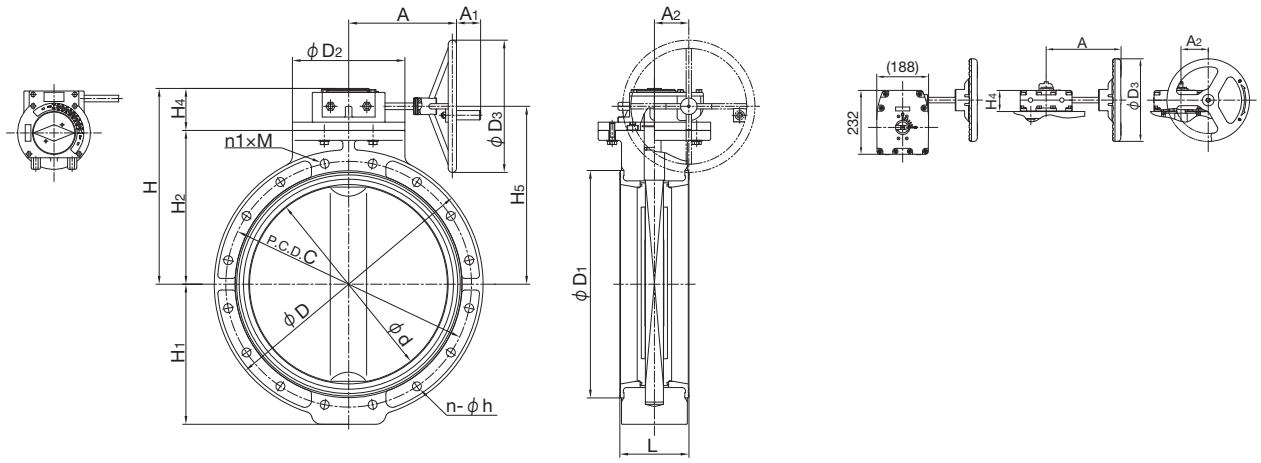

■ JIS, DIN (Unit: mm)

															JIS10K					WATERWORKS			DIN PN10			
mm	d	D	D1	D2	D3	L	H	H1	H2	H4	H5	A	A1	A2	C	n	h	n1	M	C	n	h	C	n	h	OPEN/CLOSE ROTATION
400	406	620	470	235	300	169	458	315	350	108	390	272	–	99.2	510	14	27	2	M24	–	–	–	515	16	26	9.5
450	452	665	525	340	400	179	497	335	370	127	443	326	75.5	104.5	565	16	27	4	M24	–	–	–	565	20	26	13.75
500	502	720	575	340	400	190	527	365	400	127	473	326	75.5	104.5	620	16	27	4	M24	–	–	–	620	20	26	13.75
600	603	813	686	340	400	209	592	424	465	127	538	326	75.5	104.5	730	20	33	4	M30	–	–	–	725	20	30	13.75

■ JIS10K (UNIT: mm)

mm	M	THRU HOLE n	NO. OF FITTINGS USED			ℓ1	ℓ2
			TOP	BOTTOM	TOTAL 2 x n1		
400	M24	14	2×2	–	4	36	24
450	M24	16	2×2	2×2	8	36	24
500	M24	16	2×2	2×2	8	36	24
600	M30	20	2×2	2×2	8	43	30

■ ANSI (Unit: inch)

																ANSI CLASS 150				
inch	mm	d	D	D1	D2	D3	L	H	H1	H2	H4	H5	A	A1	A2	C	n	h	OPEN/CLOSE ROTATION	GEAR BOX TYPE
16	400	15.98	24.41	18.50	9.25	11.81	6.65	18.03	12.40	13.78	4.25	15.35	10.71	–	3.91	21.26	16	1.12	9.5	TYPE 3
18	450	17.80	26.18	20.67	13.39	15.75	7.05	19.57	13.19	14.57	5.00	17.44	12.83	2.97	4.11	22.76	20	1.26	13.75	
20	500	19.76	28.35	22.64	13.39	15.75	7.48	20.75	14.37	15.75	5.00	18.62	12.83	2.97	4.11	25.00	20	1.26	13.75	AB1250N
24	600	23.74	32.01	27.01	13.39	15.75	8.23	23.31	16.69	18.31	5.00	21.18	12.83	2.97	4.11	29.53	20	1.38	13.75	

AUTOMATIC | PNEUMATIC | TYPE TW | DOUBLE ACTING | AIR TO OPEN | AIR TO CLOSE

BUTTERFLY VALVE TYPE 56D, 75D

TYPE——A56K, A75K
CONNECTION / WAFER——JIS, DIN, ANSI

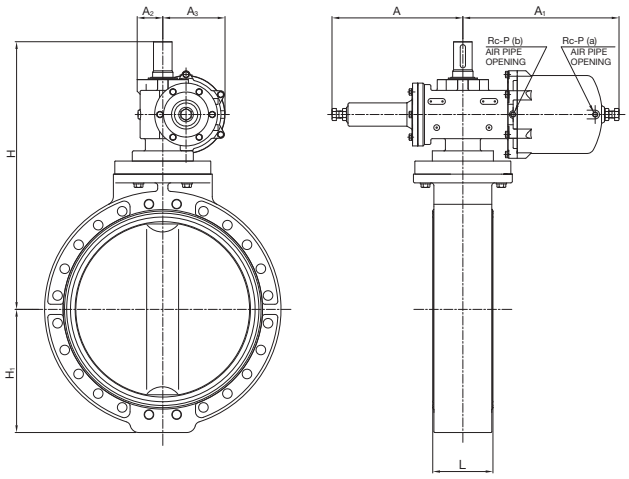

ACTUATOR SELECTION CHART

SIZE	ACTUATOR TYPE
400mm (16inch)	TW-250D-F14
450mm (18inch)	TW-250D-F16
500mm (20inch)	
600mm (24inch)	

For detailed specifications, see P.124

■ JIS, DIN (Unit: mm)

mm	L	D3	H	H1	A1	A2	A3	A4
400	169	760	315	450	537	88	214	3/8
450	179	825	335	450	537	88	214	3/8
500	190	855	365	450	537	88	214	3/8
600	209	920	424	450	537	88	214	3/8

■ ANSI (Unit: inch)

inch	mm	L	D3	H	H1	A1	A2	A3	A4
16	400	6.65	29.92	12.40	17.72	21.14	3.46	8.43	3/8
18	450	7.05	32.48	13.19	17.72	21.14	3.46	8.43	3/8
20	500	7.48	33.66	14.37	17.72	21.14	3.46	8.43	3/8
24	600	8.23	36.22	16.69	17.72	21.14	3.46	8.43	3/8

AUTOMATIC | ELECTRIC | TYPE S | Three-Phase AC200V • Three-Phase AC400V

BUTTERFLY VALVE TYPE 56D, 75D

TYPE——A56S, A75S
CONNECTION / WAFER——JIS, DIN, ANSI

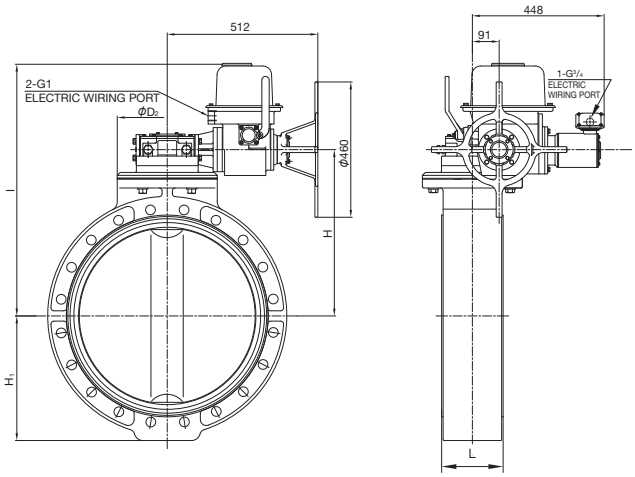

ACTUATOR SELECTION CHART

SIZE	ACTUATOR TYPE
400mm (16inch)	LTMD-01/ BRM-3
450mm (18inch)	
500mm (20inch)	
600mm (24inch)	

For detailed specifications, see P.135

■ JIS, DIN (Unit: mm)

mm	L	D3	H	H1
400	169	461	315	754
450	179	471	335	764
500	190	501	365	794
600	209	566	424	859

■ ANSI (Unit: inch)

inch	mm	L	D3	H	H1
16	400	6.65	18.15	12.40	29.69
18	450	7.05	18.54	13.19	30.08
20	500	7.48	19.72	14.37	31.26
24	600	8.23	22.28	16.69	33.82

BUTTERFLY VALVE TYPE58



- 50% LIGHT WEIGHT COMPARED TO 700MM PDCPD LARGE SIZE BUTTERFLY VALVE
- FACE TO FACE DIMENSION COMPLIANT WITH INTERNAL ISO (ISO 5752) SHORT STANDARD
- ASSEMBLED WITH 700MM PP DISC OR PVDF DISC FOR EXCELLENT RESISTANCE TO CORROSION

MANUAL

BASIC SPECIFICATIONS

VALVE TYOE——**BUTTERFLY VALVE TYPE58**
SIZE——**700mm**
BODY MATERIAL——**PDCPD**
SEAL MATERIAL / SEAT——**EPDM** **FKM** **NBR**
CONNECTION / WAFER——**JIS10K、DIN、ANSI**

	FLUID TEMPERATURE	MAXIMUM WORKING PRESSURE (NORMAL TEMPERATURE) MPa {Kgf/cm2}
PDCPD (700mm)	- 20℃ - 80℃	0.75 {7.7}

NOTE The maximum working pressure is the value including the water hammer pressure. Be careful that the maximum working pressure is not exceeded during use.
* Concerning the allowable pressure for each temperature and material, see the technical documents at the end of this catalog.

PARTS LIST MANUAL

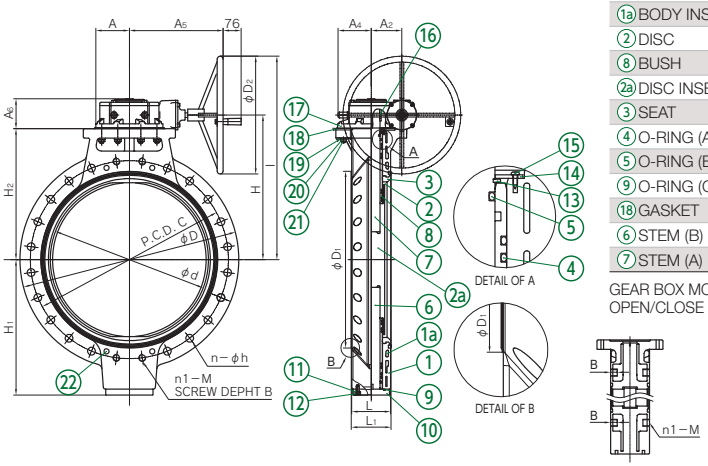

PART NO. / NAME	QTY	MATERIAL
① BODY	1	PDCPD
①a BODY INSERT	2	SCS13
② DISC	1	PP、PVDF
⑧ BUSH	2	PP、PVDF
②a DISC INSERT	1	EPDM、FKM、NBR
③ SEAT	1	EPDM、FKM、NBR
④ O-RING (A)	16	EPDM、FKM、NBR
⑤ O-RING (B)	1	EPDM、FKM、NBR
⑨ O-RING (C)	1	EPDM、FKM、NBR
⑱ GASKET	1	EPDM、FKM、NBR
⑥ STEM (B)	1	SUS403、SUS316
⑦ STEM (A)	1	SUS403、SUS316

PART NO. / NAME	QTY	MATERIAL
⑩ STEM HOLDER (B)	1	ABS
⑪ WASHER (A)	4	SUS304
⑫ BOLT (A)	4	SUS304
⑬ C-SHAPED STOP RING	1	SUS304
⑭ STEM HOLDER (A)	1	ABS
⑮ TAPPING SCREW	4	SUS304
⑯ KEY	1	S45C
⑰ GEAR BOX	1	FC250 (POLYURETHANE PAINT)
⑲ WASHER (B)	8	SUS304
⑳ NUT	8	SUS304
㉑ BOLT (B)	8	SUS304
㉒ CAP	8	EPDM

GEAR BOX MODEL CODE:AB1950N PR4
OPEN/CLOSE ROTATION:55

SPECIFICATION LIST

LEVER TYPE	SIDE GEAR TYPE	TOP GEAR TYPE
—	○	—

CHAIN TYPE	LONG STEM TYPE	FLOAT TYPE	WITH LIMIT SWITCH
—	—	—	—

* For other specifications, contact our sales office in your area.

PRODUCT MODEL CODE LIST

AUTOMATIC

ACTUATION	TYPE	OPERATING SYSTEM	BODY	SEAL MATERIAL	CONNECTION	STANDARD	SIZE	DISC PVDF
V	58	SG	D	*	W	*	700	01M
V MANUAL VALVE	58 TYPE 58	SG SIDE GEAR TYPE	D PDCPD	E EPDM V FKM N NBR	W WAFER	1 JIS10K W – D DIN A ANSI	700 700mm	Used when the disc material is PVDF.

MANUAL

BUTTERFLY VALVE TYPE58

TYPE——V58SGD
CONNECTION / WAFER——JIS, DIN, ANSI

■ JIS, DIN (Unit: mm)

																JIS10K							WATERWORKS (JIS B2062)				DIN PN10						
mm	d	D	D1	D2	L	L1	H	I	H1	H2	A	A2	A4	A5	A6	C	h	N (NO. OF TOTAL HOLE)	n (THRU HOLE)	n1 (NO. OF FITTING USED ONE SIDE/TOTAL)	M	B	C	h	N (NO. OF TOTAL HOLE)	THRU HOLE n	C	h	N (NO. OF TOTAL HOLE)	THRU HOLE n	n1 (NO. OF FITTING USED ONE SIDE/TOTAL)	M	B
700	670	925	750	500	165	169	613	863	574	555	142.5	130	140	397.5	127	840	33	24	20	[4]/8	M30	28	–	–	–	–	840	30	24	20	[4]/8	M27	28

■ ANSI (Unit: inch)

																	ANSI CLASS 150						
inch	mm	d	D	D1	D2	L	L1	H	I	H1	H2	A	A2	A4	A5	A6	C	h	N (NO. OF TOTAL HOLE)	THRU HOLE n	n1 (NO. OF FITTING USED ONE SIDE/TOTAL)	M	B
28	700	26.38	36.42	29.53	19.69	6.50	6.65	24.13	33.98	22.60	21.85	5.61	5.12	5.51	15.65	5.00	34.00	1.38	28	24	[4]/8	1 1/4-7UNC	1.10

BUTTERFLY VALVE TYPE 55

- HIGH CORROSION RESISTANCE AGAINST CORROSIVE FLUID (IDEAL FOR CORROSIVE CHEMICAL LINE)
- Cv VALUE IS IMPROVED BY REDUCED DISC THICKNESS AND LARGER OPENING AREA.
- EXCELLENT HEAT AND COLD RESISTANCE ALLOWING FOR CONTINUOUS OPERATION AT -20 TO 100°C
- SIMPLE STEM SEAL STRUCTURE FACILITATES MAINTENANCE.



BASIC SPECIFICATIONS

VALVE TYPE — **BUTTERFLY VALVE TYPE 55**

SIZE / LEVER TYPE — **50 mm—125 mm (2 inch—5 inch)**

GEAR TYPE — **50 mm—250 mm (2 inch—10 inch)**

BODY MATERIAL — **FCD-S (EPOXY POWDER COATING)**

SEAL MATERIAL / SEAT — **PTFE**

CONNECTION / WAFER — **JIS10K, JIS5K, DIN, ANSI**

	FLUID TEMPERATURE	MAXIMUM WORKING PRESSURE (NORMAL TEMPERATURE) MPa{kgf/cm2}
FCD-S	-20℃ ~ 100℃	1.0 {10.2}

NOTE The maximum working pressure is the value including the water hammer pressure. Be careful that the maximum working pressure is not exceeded during use.

* Concerning the allowable pressure for each temperature and material, see the technical documents at the end of this catalog.

PARTS LIST MANUAL

[LEVER TYPE]

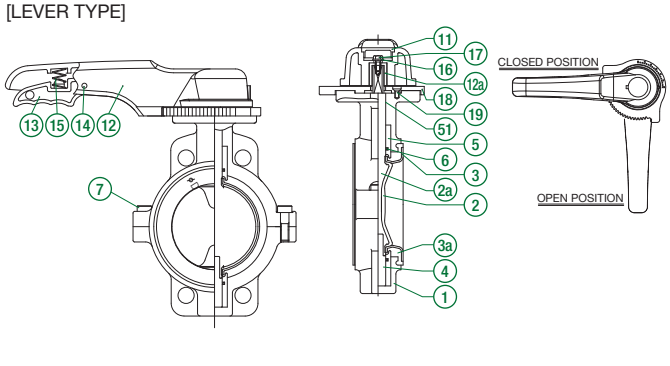

[GEAR TYPE]

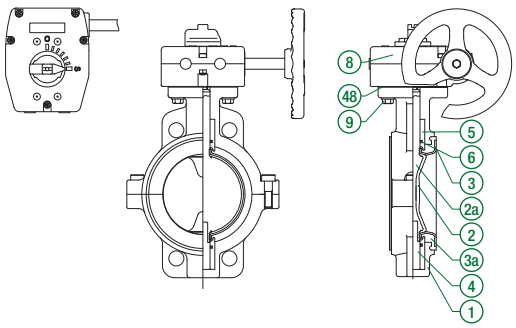

PART NO. / NAME	QTY	MATERIAL
① BODY	1	FCD-S (EPOXY POWDER COATING)
② DISC	1	PTFE
②a DISC INSERT	1	SUS304
③ SEAT	1	PTFE
③a SEAT CUSHION	1	CR
④ STEM	1	SUS304
⑤ BUSH	2	SUS304
⑥ O-RING	2	EPDM
⑦ BOLT (A)	—	SUS304

ONLY USED FOR LEVER TYPE

PART NO. / NAME	QTY	MATERIAL
⑪ CAP	1	PP
⑫ HANDLE	1	PP
⑫a EMBEDDED HANDLE FITTING	1	SUS316
⑬ HANDLE LEVER	1	PPG
⑭ PIN	1	PPG
⑮ SPRING	1	SUS304

PART NO. / NAME	QTY	MATERIAL
⑯ WASHER	1	SUS304
⑰ BOLT (C)	1	SUS304
⑱ LOCKING PLATE	1	PPG
⑲ STOP RING	4	SUS304
⑤1 O-RING (B)	1	NBR

ONLY USED FOR GEAR TYPE

PART NO. / NAME	QTY	MATERIAL
⑧ GEAR BOX	1	RESIN, etc.
⑨ BOLT (B)	4	SUS304
④⑧ GASKET (C)	1	EPDM

SPECIFICATION LIST MANUAL

LEVER TYPE	SIDE GEAR TYPE	TOP GEAR TYPE
○	○	—

CHAIN TYPE	LONG STEM TYPE	FLOAT TYPE	WITH LIMIT SWITCH
—	—	—	○

* For other specifications, contact our sales office in your area.

COMPATIBLE ACTUATOR AUTOMATIC

PNEUMATIC TYPE TA — For detailed specifications, see P.124

ELECTRIC TYPE T — For detailed specifications, see P.139

ELECTRIC TYPE S — For detailed specifications, see P.133

PRODUCT MODEL CODE LIST

MANUAL

ACTUATION	TYPE	OPERATING SYSTEM	BODY MATERIAL	SEAL MATERIAL	CONNECTION	STANDARD	SIZE
V	55	**	S	T	W	*	***
V MANUAL VALVE	55 TYPE 55	LV LEVER TYPE SG SIDE GEAR TYPE	S FCDS	T PTFE	W WAFER	1 JIS10K 5 JIS5K D DIN A ANSI	050 50mm ~ 250 250mm

PRODUCT MODEL CODE LIST

AUTOMATIC

ACTUATION	TYPE	ACTUATOR TYPE	ACTION / POWER SOURCE	BODY MATERIAL	SEAL MATERIAL	CONNECTION	STANDARD	SIZE
A	55	*	*	S	T	W	*	***
A AUTOMATIC VALVE	55 TYPE 55	PNEUMATIC K TYPE TA ELECTRIC T TYPE T S TYPE S	PNEUMATIC F DOUBLE ACTING G AIR TO OPEN S AIR TO CLOSE ELECTRIC 1 Single-Phase 100V 2 Single-Phase 200V 3 Three-Phase AC200V 4 Three-Phase AC400V	S FCDS	T PTFE	W WAFER	1 JIS10K 5 JIS5K D DIN A ANSI	050 50mm ~ 250 250mm

MANUAL

BUTTERFLY VALVE TYPE 55

TYPE——V55LV, V55SG

CONNECTION / WAFER——JIS, DIN, ANSI

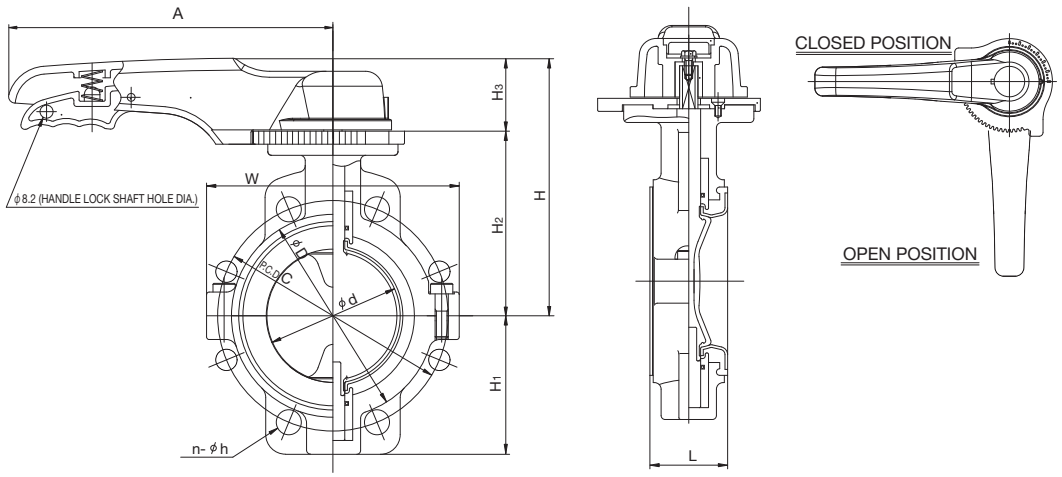

■ JIS, DIN (Unit: mm)

mm	d	D	L	H		H1	H2		H3		I	W	A	A1	A2	HANDLE ROTATION	JIS5K			JIS10K			DIN PN10		
				LEVER TYPE	GEAR TYPE		LEVER TYPE	GEAR TYPE	LEVER TYPE	GEAR TYPE							C	n	h	C	n	h	C	n	h
50	55	90	44	161	135	61	105	100	56	92	215	116	220	167	64		105	2(4)	15	120	2(4)	19	125	2(4)	18
80	80	125	54	180	154	95	124	119	56	92	234	152	250	167	64		145	–(4)	19	150	4(8)	19	160	4(8)	18
100	100	154	59	196	170	99	140	135	56	92	250	174	250	167	64		165	4(8)	19	175	4(8)	19	180	4(8)	18
125	125	181	64	235	193	120	166	158	69	92	273	206	320	167	64	9.5	200	4(8)	19	210	4(8)	23	210	4(8)	18
150	150	211	75	–	210	137	–	175	–	92	290	236	–	167	64		230	4(8)	19	240	4(8)	23	240	4(8)	22
200	191	265	85	–	240	163	–	205	–	92	320	282	–	167	64		280	4(8)	23	290	4(12)	23	295	4(8)	22
250	245	325	96	–	275	200	–	240	–	92	355	341	–	167	64		345	4(12)	23	355	4(12)	25	350	4(12)	22

■ ANSI (Unit: inch)

inch	mm	d	D	L	H		H1	H2		H3		I	W	A	A1	A2	HANDLE ROTATION	ANSI CLASS 150			GEAR BOX TYPE
					LEVER TYPE	GEAR TYPE		LEVER TYPE	GEAR TYPE	LEVER TYPE	GEAR TYPE							C	n	h	
2	50	2.17	3.54	1.73	6.34	5.31	2.40	4.13	3.94	2.20	3.62	8.46	4.57	8.66	6.57	2.52		4.75	2(4)	0.75	
3	80	3.15	4.92	2.13	7.09	6.06	3.74	4.88	4.69	2.20	3.62	9.21	5.98	9.84	6.57	2.52		6.00	–(4)	0.75	
4	100	3.94	6.06	2.32	7.72	6.69	3.90	5.51	5.31	2.20	3.62	9.84	6.85	9.84	6.57	2.52		7.50	4(8)	0.75	
5	125	4.92	7.13	2.52	9.25	7.60	4.72	6.54	6.22	2.72	3.62	10.75	8.11	12.60	6.57	2.52	9.5	8.50	4(8)	0.88	TYPE1
6	150	5.91	8.31	2.95	–	8.27	5.39	–	6.89	–	3.62	11.42	9.29	–	6.57	2.52		9.50	4(8)	0.88	
8	200	7.52	10.43	3.35	–	9.45	6.42	–	8.07	–	3.62	12.60	11.10	–	6.57	2.52		11.75	4(8)	0.88	
10	250	9.65	12.80	3.78	–	10.83	7.87	–	9.45	–	3.62	13.98	13.43	–	6.57	2.52		14.25	4(12)	1.00	

AUTOMATIC | PNEUMATIC | TYPE TA | DOUBLE ACTING | AIR TO OPEN | AIR TO CLOSE

BUTTERFLY VALVE TYPE 55

TYPE——A55K
CONNECTION / WAFER——JIS, DIN, ANSI

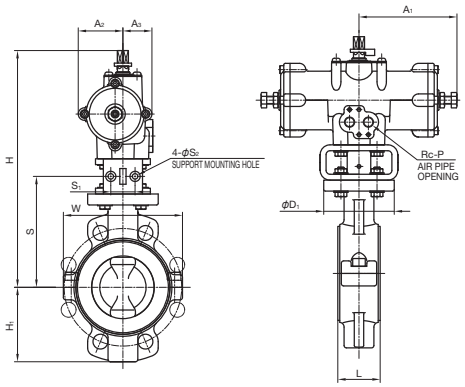

ACTUATOR SELECTION CHART

SIZE	ACTUATOR TYPE
50mm (2inch)	TA2A-050D
80mm (3inch)	TA2A-063D
100mm (4inch)	TA2A-080D
125mm (5inch)	
150mm (6inch)	TA2A-100D
200mm (8inch)	TA2A-125D
250mm (10inch)	TA2A-160D

For detailed specifications, see P.124

■ JIS, DIN (Unit: mm)

mm	d	L	D	D1	H	H1	W	A	A2	A3	S	S1	S2	P
50	55	44	90	90	268	64	116	210	46	36	122.5	32	7	1/4
80	80	54	125	90	302	95	152	250	57	38	141.5	32	7	1/4
100	100	59	154	90	351	99	174	292	71	45	157.5	32	7	1/4
125	125	64	181	125	380	120	206	292	71	45	183.5	42	9	1/4
150	150	75	211	125	428	137	236	362	85.5	57	200.5	42	9	1/4
200	191	85	265	125	483	163	282	440	90	60	–	–	–	1/4
250	245	96	325	125	583	200	341	532	113	68	–	–	–	1/4

■ ANSI (Unit: inch)

inch	mm	d	L	D	D1	H	H1	W	A	A2	A3	S	S1	S2	P
2	50	2.17	1.73	3.54	3.54	10.55	2.52	4.57	8.27	1.81	1.42	4.82	1.26	0.28	1/4
3	80	3.15	2.13	4.92	3.54	11.89	3.74	5.98	9.84	2.24	1.50	5.57	1.26	0.28	1/4
4	100	3.94	2.32	6.06	3.54	13.82	3.90	6.85	11.50	2.80	1.77	6.20	1.26	0.28	1/4
5	125	4.92	2.52	7.13	4.92	14.96	4.72	8.11	11.50	2.80	1.77	7.22	1.65	0.35	1/4
6	150	5.91	2.95	8.31	4.92	16.85	5.39	9.29	14.25	3.37	2.24	7.89	1.65	0.35	1/4
8	200	7.52	3.35	10.43	4.92	19.02	6.42	11.10	17.32	3.54	2.36	–	–	–	1/4
10	250	9.65	3.78	12.80	4.92	22.95	7.87	13.43	20.94	4.45	2.68	–	–	–	1/4

AUTOMATIC | PNEUMATIC | TYPE TA | DOUBLE ACTING | AIR TO OPEN | AIR TO CLOSE

BUTTERFLY VALVE TYPE 55

TYPE——A55K
CONNECTION / WAFER——JIS, DIN, ANSI

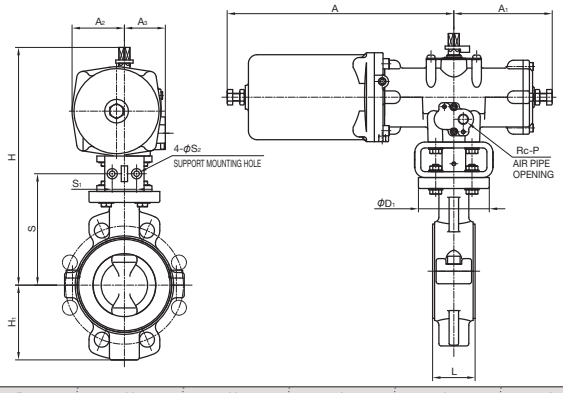

ACTUATOR SELECTION CHART

SIZE	ACTUATOR TYPE
50mm (2inch)	TA2A-050R
80mm (3inch)	TA2A-063R
100mm (4inch)	TA2A-080R
125mm (5inch)	
150mm (6inch)	TA2A-100R2
200mm (8inch)	TA2A-125R2
250mm (10inch)	TA2A-160R2

For detailed specifications, see P.124

■ JIS, DIN (Unit: mm)

mm	L	D1	H	H1	A	A1	A2	A3	S	S1	S2	P
50	44	90	268	61	240	105	53	50	122.5	32	7	1/4
80	54	90	302	95	288	125	66.5	52	141.5	32	7	1/4
100	59	90	351	99	341	146	82.5	59	157.5	32	7	1/4
125	64	125	380	120	341	146	82.5	59	183.5	42	9	1/4
150	75	125	428	137	417	181	103	71	200.5	42	9	1/4
200	85	125	483	163	542	220	118.5	74	–	–	–	1/4
250	96	125	583	200	658	266	149	82	–	–	–	1/4

■ ANSI (Unit: inch)

inch	mm	L	D1	H	H1	A	A1	A2	A3	S	S1	S2	P
2	50	1.73	3.54	10.55	2.40	9.45	4.13	2.09	1.97	4.82	1.26	0.28	1/4
3	80	2.13	3.54	11.89	3.74	11.34	4.92	2.62	2.05	5.57	1.26	0.28	1/4
4	100	2.32	3.54	13.82	3.90	13.43	5.75	3.25	2.32	6.20	1.26	0.28	1/4
5	125	2.52	4.92	14.96	4.72	13.43	5.75	3.25	2.32	7.22	1.65	0.35	1/4
6	150	2.95	4.92	16.85	5.39	16.42	7.13	4.06	2.80	7.89	1.65	0.35	1/4
8	200	3.35	4.92	19.02	6.42	21.34	8.66	4.67	2.91	–	–	–	1/4
10	250	3.78	4.92	22.95	7.87	25.91	10.47	5.87	3.23	–	–	–	1/4

AUTOMATIC | ELECTRIC | TYPE T | Single-Phase 100V • Single-Phase 200V

BUTTERFLY VALVE TYPE 55

TYPE——A55T

CONNECTION / WAFER——JIS, DIN, ANSI

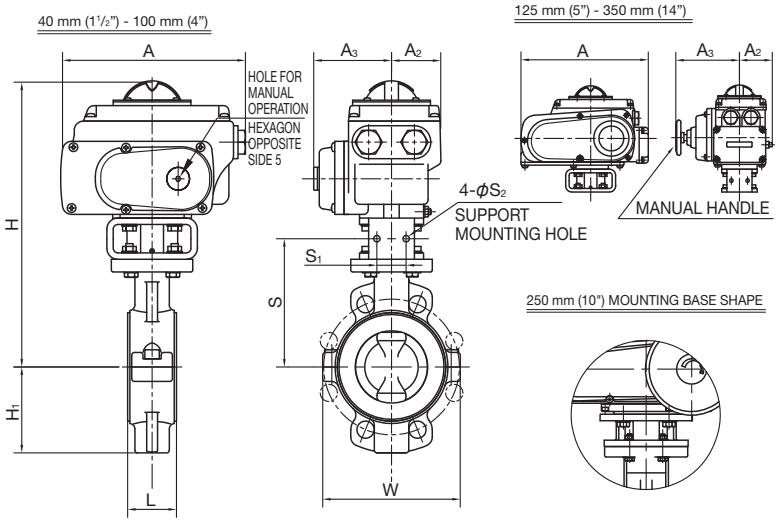

ACTUATOR SELECTION CHART

SIZE	ACTUATOR TYPE
50mm (2inch)	T-0
80mm (3inch)	
100mm (4inch)	
125mm (5inch)	T-1
150mm (6inch)	T-2
200mm (8inch)	T-2.5
250mm (10inch)	T-3

For detailed specifications, see P.139

■ JIS, DIN (Unit: mm)

mm	L	H	H1	W	A	A2	A3	S	S1	S2
50	44	295	61	116	202	53.8	85	122.5	32	7
80	54	314	95	152	202	53.8	85	141.5	32	7
100	59	330	99	174	202	53.8	85	157.5	32	7
125	64	374	120	206	252	65	136	183.5	42	9
150	75	424	137	236	310	85	154	200.5	42	9
200	85	454	163	282	310	85	154	230.5	42	9
250	96	540	200	341	388	136	245.5	–	–	–

■ ANSI (Unit: inch)

inch	mm	L	H	H1	W	A	A2	A3	S	S1	S2
2	50	1.73	11.61	2.40	4.57	7.95	2.12	3.35	4.82	1.26	0.28
3	80	2.13	12.36	3.74	5.98	7.95	2.12	3.35	5.57	1.26	0.28
4	100	2.32	12.99	3.90	6.85	7.95	2.12	3.35	6.20	1.26	0.28
5	125	2.52	14.72	4.72	8.11	9.92	2.56	5.35	7.22	1.65	0.35
6	150	2.95	16.69	5.39	9.29	12.20	3.35	6.06	7.89	1.65	0.35
8	200	3.35	17.87	6.42	11.10	12.20	3.35	6.06	9.07	1.65	0.35
10	250	3.78	21.26	7.87	13.43	15.28	5.35	9.67	–	–	–

AUTOMATIC | ELECTRIC | TYPE S | Three-Phase AC200V • Three-Phase AC400V

BUTTERFLY VALVE TYPE 55

TYPE——A55S

CONNECTION / WAFER——JIS, DIN, ANSI

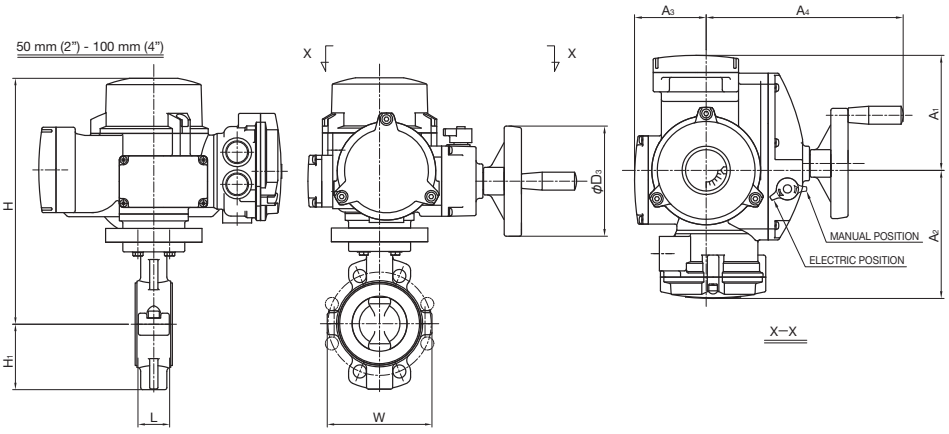

ACTUATOR SELECTION CHART

SIZE	ACTUATOR TYPE
50mm (2inch)	SRJ-010
80mm (3inch)	
100mm (4inch)	
125mm (5inch)	SRJ-020
150mm (6inch)	
200mm (8inch)	SRJ-060
250mm (10inch)	

For detailed specifications, see P.133

■ JIS, DIN (Unit: mm)

mm	L	H	H1	W	D3	A1	A2	A3	A4
50	44	318	61	116	160	167	186	104	286
80	54	337	95	152	160	167	186	104	286
100	59	353	99	174	160	167	186	104	286
125	64	396	120	206	160	167	186	104	286
150	75	413	137	236	160	167	186	104	286
200	85	440	163	282	245	191	202	130	330
250	96	475	200	341	245	191	202	130	330

■ ANSI (Unit: inch)

inch	mm	L	H	H1	W	D3	A1	A2	A3	A4
2	50	1.73	12.52	2.40	4.57	6.30	6.57	7.32	4.09	11.26
3	80	2.13	13.27	3.74	5.98	6.30	6.57	7.32	4.09	11.26
4	100	2.32	13.90	3.90	6.85	6.30	6.57	7.32	4.09	11.26
5	125	2.52	15.59	4.72	8.11	6.30	6.57	7.32	4.09	11.26
6	150	2.95	16.26	5.39	9.29	6.30	6.57	7.32	4.09	11.26
8	200	3.35	17.32	6.42	11.10	9.65	7.52	7.95	5.12	12.99
10	250	3.78	18.70	7.87	13.43	9.65	7.52	7.95	5.12	12.99

BUTTERFLY VALVE TYPE 55IS

- FACE-TO-FACE DIMENSION COMPLIANT WITH INTERNAL ISO SHORT STANDARD
- HIGH CHEMICAL RESISTANCE IN ADDITION TO EXCELLENT HEAT AND COLD RESISTANCE ALLOWING FOR USE AT -20 TO 100°C

BASIC SPECIFICATIONS

VALVE TYPE — **BUTTERFLY VALVE TYPE 55IS**

SIZE / LEVER TYPE — **50 mm—125 mm (2 inch—5 inch)**

GEAR TYPE — **50 mm—200 mm(2 inch—8 inch)**

BODY MATERIAL — FCD450 (EPOXY POWDER COATING)

SEAL MATERIAL / SEAT — PTFE

CONNECTION / WAFER — **JIS10K, JIS5K, DIN, ANSI**

	FLUID TEMPERATURE	MAXIMUM WORKING PRESSURE (NORMAL TEMPERATURE) MPa{kgf/cm²}
FCD450	-20℃ ~ 100℃	1.0 {10.2}

NOTE The maximum working pressure is the value including the water hammer pressure. Be careful that the maximum working pressure is not exceeded during use.

* Concerning the allowable pressure for each temperature and material, see the technical documents at the end of this catalog.

MANUAL



PARTS LIST MANUAL

[LEVER TYPE]

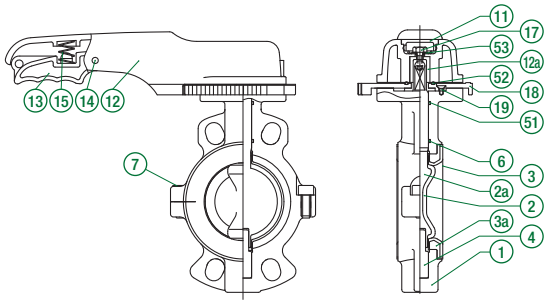

CLOSED POSITION

OPEN POSITION

[GEAR TYPE]

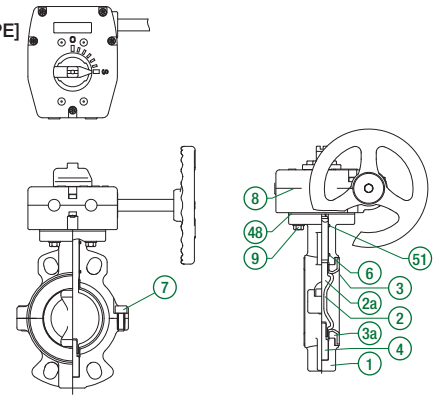

PART NO. / NAME	QTY	MATERIAL
①BODY	1	FCD450 (EPOXY POWDER COATING)
②DISC	1	PTFE
②aDISC INSERT	1	SUS304
③SEAT	1	PTFE
③aSEAT CUSHION	1	CR
④STEM	1	SUS304
⑥O-RING	1	EPDM
⑤1O-RING (B)	1	NBR

ONLY USED FOR LEVER TYPE

PART NO. / NAME	QTY	MATERIAL	PART NO. / NAME	QTY	MATERIAL
⑦BOLT (A)	2	SUS304	⑮SPRING	1	SUS304
⑪CAP	1	PP	⑰BOLT (C)	1	SUS304
⑫HANDLE	1	PP	⑱LOCKING PLATE	1	PPG
⑫aEMBEDDED HANDLE FITTING	1	SUS316	⑲SET SCREW (A)	4	SUS304
⑬HANDLE LEVER	1	PPG	⑤2O-RING (C)	1	EPDM
⑭PIN	1	PPG	⑤3WASHER WITH RUBBER	1	SUS304+EPDM

ONLY USED FOR GEAR TYPE

PART NO. / NAME	QTY	MATERIAL
⑦BOLT (A)	–	SUS304 (50~125mm:2 150mm:4)
⑧GEAR BOX	1	RESIN, etc.
⑨BOLT (B)	4	SUS304
④8GASKET (C)	1	EPDM

SPECIFICATION LIST MANUAL

LEVER TYPE	SIDE GEAR TYPE	TOP GEAR TYPE
○	○	—

CHAIN TYPE	LONG STEM TYPE	FLOAT TYPE	WITH LIMIT SWITCH
—	—	—	○

* For other specifications, contact our sales office in your area.

PRODUCT MODEL CODE LIST

MANUAL

ACTUATION	TYPE	OPERATING SYSTEM	BODY MATERIAL	SEAL MATERIAL	CONNECTION	STANDARD	SIZE
V	5S	**	4	T	W	*	***
V MANUAL VALVE	5S TYPE 55IS	LV LEVER TYPE SG SIDE GEAR TYPE	4 FCD450	T PTFE	W WAFER	1 JIS10K 5 JIS5K D DIN A ANSI	050 50mm ~ 200 200mm

MANUAL

BUTTERFLY VALVE TYPE 55IS

TYPE——V5SLV, V5SSG

CONNECTION / WAFER——JIS, DIN, ANSI

[LEVER TYPE]

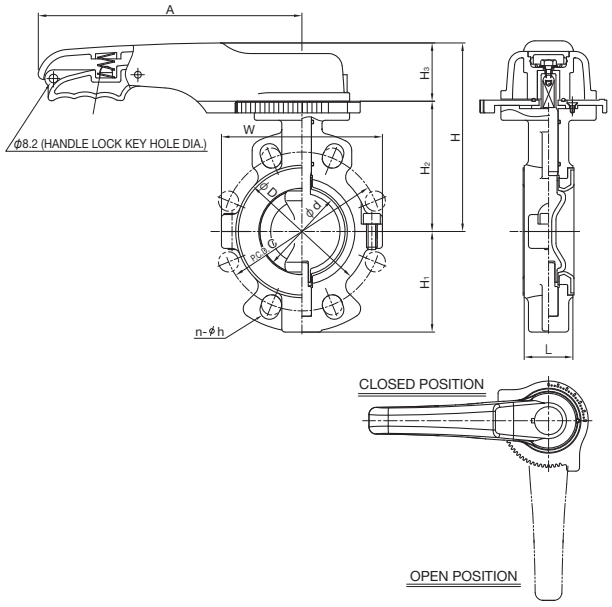

[GEAR TYPE]

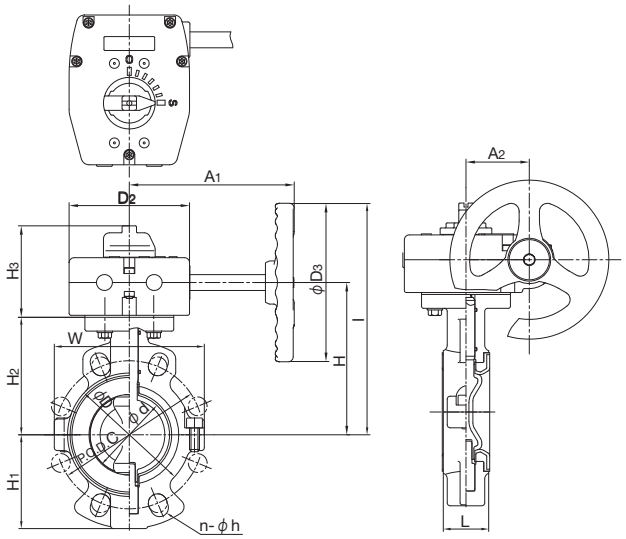

■ JIS, DIN (Unit: mm)

mm	d	D	L	H		H1	H2		H3		I	W	A	A1	A2	HANDLE ROTATION	JIS5K			JIS10K			DIN PN10		
				LEVER TYPE	GEAR TYPE		LEVER TYPE	GEAR TYPE	LEVER TYPE	GEAR TYPE							C	n	h	C	n	h	C	n	h
50	55	90	43	161	135	61	105	100	56	92	215	116	220	167	64		105	2(4)	15	120	2(4)	19	125	2(4)	18
65	65	110	46	176	150	80	120	115	56	92	230	146	220	167	64		130	2(4)	15	140	2(4)	19	145	2(4)	18
80	80	125	46	180	154	95	124	119	56	92	234	152	250	167	64		145	-(4)	19	150	4(8)	19	160	4(8)	18
100	100	154	52	196	170	103	140	135	56	92	250	174	250	167	64	9.5	165	4(8)	19	175	4(8)	19	180	4(8)	18
125	125	181	56	235	193	120	166	158	69	92	273	206	320	167	64		200	4(8)	19	210	4(8)	23	210	4(8)	18
150	150	211	56	-	210	137	-	175	-	92	290	236	-	167	64		230	4(8)	19	240	4(8)	23	240	4(8)	22
200	191	257	60	-	240	163	-	205	-	92	320	290	-	167	64		280	4(8)	23	290	4(12)	23	295	4(8)	22

■ ANSI (Unit: inch)

inch	mm	d	D	L	H		H1	H2		H3		I	W	A	A1	A2	HANDLE ROTATION	ANSI CLASS 150			GEAR BOX TYPE
					LEVER TYPE	GEAR TYPE		LEVER TYPE	GEAR TYPE	LEVER TYPE	GEAR TYPE							C	n	h	
2	50	2.17	3.54	1.69	6.34	5.31	2.40	4.13	3.94	2.20	3.62	8.46	4.57	8.66	6.57	2.52		4.75	2(4)	0.75	
2 1/2	65	2.56	4.33	1.81	6.93	5.91	3.15	4.72	4.53	2.20	3.62	9.06	5.75	8.66	6.57	2.52		5.49	2(4)	0.75	
3	80	3.15	4.92	1.81	7.09	6.06	3.74	4.88	4.69	2.20	3.62	9.21	5.98	9.84	6.57	2.52		6.00	-(4)	0.75	
4	100	3.94	6.06	2.05	7.72	6.69	4.06	5.51	5.31	2.20	3.62	9.84	6.85	9.84	6.57	2.52	9.5	7.50	4(8)	0.75	TYPE1
5	125	4.92	7.13	2.20	9.25	7.60	4.72	6.54	6.22	2.72	3.62	10.75	8.11	12.60	6.57	2.52		8.50	4(8)	0.88	
6	150	5.91	8.31	2.20	-	8.27	5.39	-	6.89	-	3.62	11.42	9.29	-	6.57	2.52		9.50	4(8)	0.88	
8	200	7.52	10.12	2.36	-	9.45	6.42	-	8.07	-	3.62	12.60	11.42	-	6.57	2.52		11.75	4(8)	0.88	

LUG BUTTERFLY VALVE TYPE 57L (JIS10K, DIN)

- SIGNIFICANTLY REDUCES THE BURDEN OF FLUID REMOVAL WORK.
- THE OVERTIGHTENING PREVENTION MECHANISM ELIMINATES THE RISK OF SEAT BREAKAGE.
- PLASTIC GEAR BOX WITH EXCELLENT CORROSION RESISTANCE AND HIGH OPERABILITY

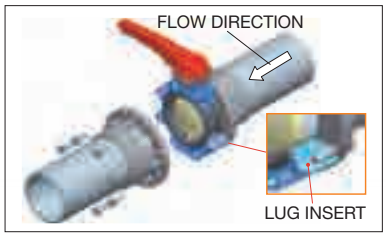

BASIC SPECIFICATIONS

VALVE TYPE——**BUTTERFLY VALVE TYPE 57L**
SIZE / LEVER TYPE——**80 mm–200 mm (3 inch–8 inch)**
GEAR TYPE——**80 mm–250 mm (3 inch–10 inch)**
BODY MATERIAL——PDCPD
SEAL MATERIAL / SEAT——EPDM / FKM / NBR
CONNECTION / WAFER——**JIS10K, DIN**
HIGH PURITY SERIES——**WETTED PARTS LUBRICANT FREE**

	FLUID TEMPERATURE	MAXIMUM WORKING PRESSURE (NORMAL TEMPERATURE) MPa{kgf/cm²} FOR WAFER
PDCPD (DISC MATERIAL— PP)	-20℃～ 80℃	1.0 {10.2}
PDCPD (DISC MATERIAL— PVDF)	-20℃～100℃	1.0 {10.2}

NOTE The maximum working pressure is the value including the water hammer pressure. Be careful that the maximum working pressure is not exceeded during use.
* Concerning the allowable pressure for each temperature and material, see the technical documents at the end of this catalog.

MANUAL



PARTS LIST MANUAL

[LEVER TYPE]

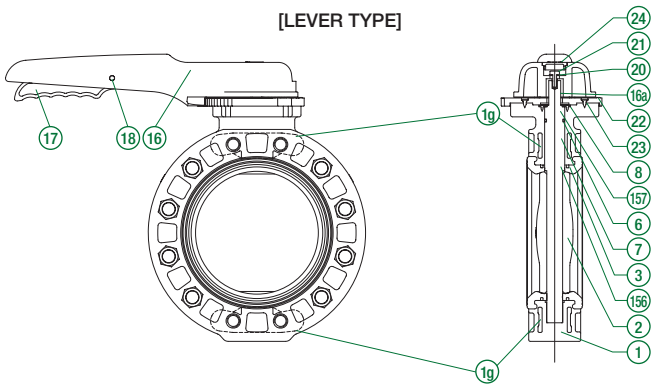

[GEAR TYPE]

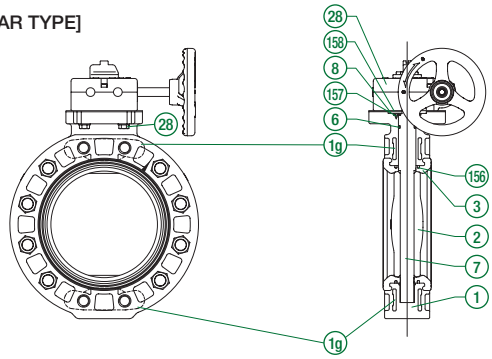

ONLY USED FOR LEVER TYPE

PART NO. / NAME	QTY	MATERIAL	PART NO. / NAME	QTY	MATERIAL
⑯HANDLE (A)	1	PP	⑳WASHER	1	SUS304
⑯a EMBEDDED HANDLE FITTING	1	SUS316L	㉑BOLT (B)	1	SUS304
⑰HANDLE LEVER	1	PPG	㉒LOCKING PLATE	1	PPG
⑱PIN	1	PPG	㉓STOP RING (B)	4	SUS304
⑲SPRING	1	SUS304	㉔CAP (A)	1	PP

ONLY USED FOR GEAR TYPE

PART NO. / NAME	QTY	MATERIAL
㉕GEAR BOX	1	RESIN, etc.
㉘BOLT (C)	4	SUS304
⑮⑧GASKET (L)	1	EPDM

PART NO. / NAME	QTY	MATERIAL
①BODY	1	PDCPD
①e LUG INSERT	8	SUS304
①g BODY INSERT		**[LEVER TYPE]** SUS304: 2 PCS–125 mm, 150 mm SCS13: 1 PC–200 mm **[GEAR TYPE]** SUS304: 1 PC–125 mm, 150 mm SCS13: 2 PCS–200 mm, 250 mm
②DISC	1	PP, PVDF
③SEAT	1	EPDM, FKM
⑥O-RING (C)	1	
⑦STEM	1	SUS403
⑧STEM HOLDER	1	PP
⑮⑥FIXING RING	2	SCS13
⑮⑦SET SCREW (F)	4	SUS304

SPECIFICATION LIST MANUAL

LEVER TYPE	SIDE GEAR TYPE	TOP GEAR TYPE
○	○	○

CHAIN TYPE	LONG STEM TYPE	FLOAT TYPE	WITH LIMIT SWITCH
○	○	○	○

* For other specifications, contact our sales office in your area.

PRODUCT MODEL CODE LIST

MANUAL

ACTUATION	TYPE	OPERATING SYSTEM	BODY MATERIAL	SEAL MATERIAL	CONNECTION	STANDARD	SIZE	DISC PVDF	HIGH PURITY SERIES
V	LG	**	D	*	W	*	***	00Q※	2
V MANUAL VALVE	LG TYPE 57L	LV LEVER TYPE SG SIDE GEAR TYPE	D PDCPD	E EPDM V FKM	W WAFER	1 JIS10K D DIN	080 80mm ~ 250 250mm	* Used when the disc material is PVDF.	2 WETTED PARTS LUBRICANT FREE

MANUAL

LUG BUTTERFLY VALVE TYPE 57L

TYPE——VLGLV, VLGSG

CONNECTION / WAFER——JIS, DIN

[LEVER TYPE]

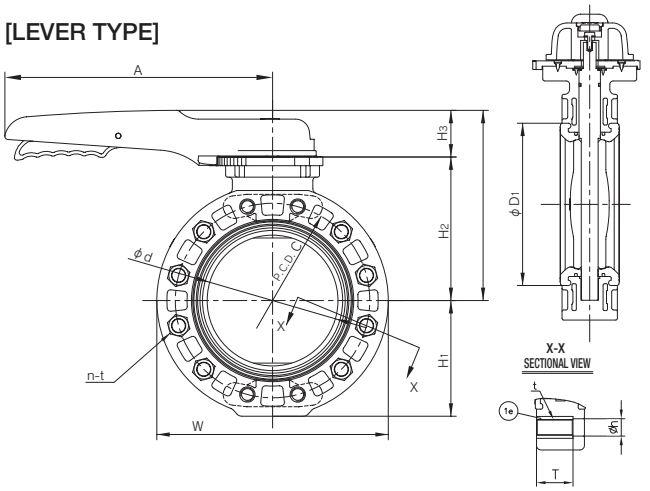

■ JIS, DIN (Unit: mm)

mm	d	D1	L	H	H1	H2	H3	A	W	T
80	77	105	46	191	94	135	56	250	193	40
100	102	134	56	206	105	150	56	250	217	40
125	129	169	66	237	124	168	69	320	247	50
150	150	190	71	252	138	183	69	320	285	50
200	195	242	87	283	173	214	69	400	345	60

	JIS10K			DIN PN10			
mm	C	n	h	C	n	h	t
80	150	8	19	160	8	18	M16×40 WIDTH ACROSS FLATS: 24
100	175	8	19	180	8	18	M16×40 WIDTH ACROSS FLATS: 24
125	210	8	23	210	8	18	M20×50 WIDTH ACROSS FLATS: 30
150	240	8	23	240	8	23	M20×50 WIDTH ACROSS FLATS: 30
200	290	12	23	295	8	23	M20×60 WIDTH ACROSS FLATS: 30

[GEAR TYPE]

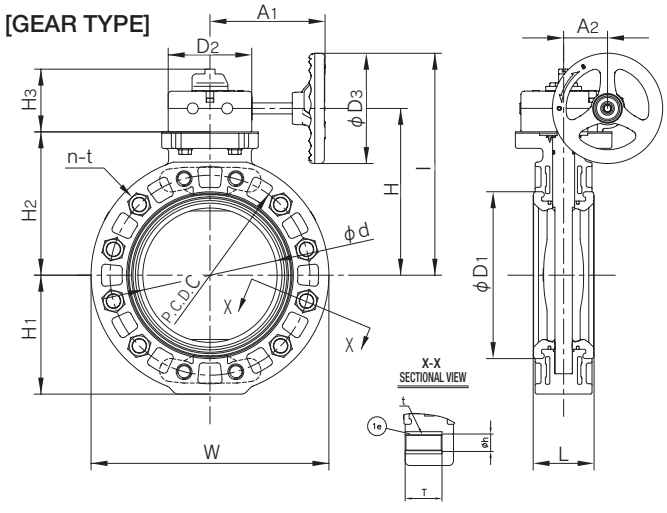

■ JIS, DIN (Unit: mm)

mm	d	D1	D2	D3	L	H	H1	H2	H3	ℓ	A1	A2
80	77	105	122	160	46	165	94	130	92	245	167	64
100	102	134	122	160	56	180	105	145	92	260	167	64
125	129	169	122	160	66	195	124	160	92	275	167	64
150	150	190	122	160	71	210	138	175	92	290	167	64
200	195	242	122	160	87	241	173	206	92	321	167	64
250	250	302	122	160	112	276	208	241	92	356	167	64

			JIS10K			DIN PN10			
mm	W	T	C	n	h	C	n	h	t
80	193	40	150	8	19	160	8	18	M16×40 WIDTH ACROSS FLATS: 24
100	217	40	175	8	19	180	8	18	M16×40 WIDTH ACROSS FLATS: 24
125	247	50	210	8	23	210	8	18	M20×50 WIDTH ACROSS FLATS: 30
150	285	50	240	8	23	240	8	23	M20×50 WIDTH ACROSS FLATS: 30
200	345	60	290	12	23	295	8	23	M20×60 WIDTH ACROSS FLATS: 30
250	415	70	355	12	25	350	12	23	M22×70 WIDTH ACROSS FLATS: 32

LUG BUTTERFLY VALVE TYPE 57TL (ANSI)

- SIGNIFICANTLY REDUCES THE BURDEN OF FLUID REMOVAL WORK.
- THE OVERTIGHTENING PREVENTION MECHANISM ELIMINATES THE RISK OF SEAT BREAKAGE.
- PLASTIC GEAR BOX WITH EXCELLENT CORROSION RESISTANCE AND HIGH OPERABILITY
- NON-DIRECTIONAL LUG TYPE

BASIC SPECIFICATIONS

VALVE TYPE——**BUTTERFLY VALVE TYPE 57TL**

SIZE / LEVER TYPE——**80 mm—200 mm (3 inch—8 inch)**

GEAR TYPE——**80 mm—300 mm (3 inch—12 inch)**

BODY MATERIAL——U-PVC

SEAL MATERIAL / SEAT——EPDM / FKM / NBR

CONNECTION / WAFER——**ANSI**

	FLUID TEMPERATURE	MAXIMUM WORKING PRESSURE (NORMAL TEMPERATURE) MPa{kgf/cm²}	
		80mm—250mm	300mm
U-PVC	0℃ ~ 50℃	1.0 {10.2}	0.75 {7.7}

NOTE The maximum working pressure is the value including the water hammer pressure. Be careful that the maximum working pressure is not exceeded during use.

* Concerning the allowable pressure for each temperature and material, see the technical documents at the end of this catalog.



PARTS LIST MANUAL

[LEVER TYPE]

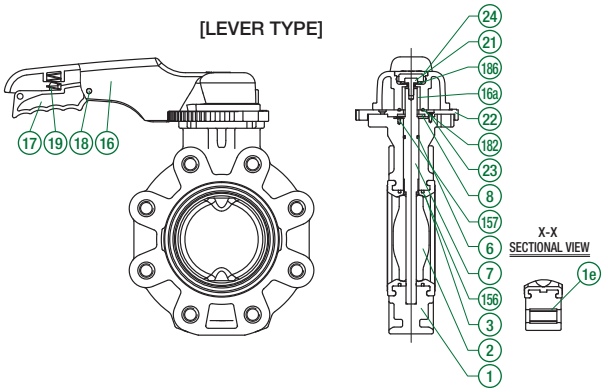

[GEAR TYPE]

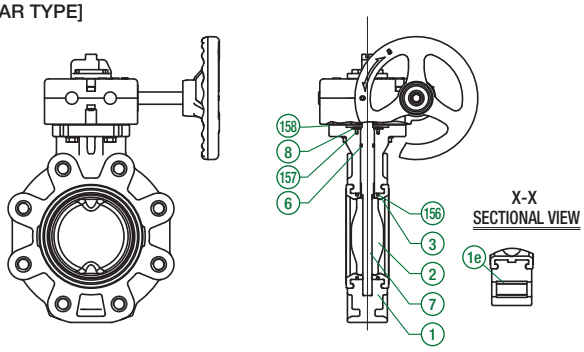

PART NO. / NAME	QTY	MATERIAL
1 BODY	1	U-PVC
1e LUG INSERT	—	SUS316
2 DISC	1	PP
3 SEAT	1	EPDM, FKM, NBR
6 O-RING (C)	1	
7 STEM	1	SUS403
8 STEM HOLDER (A)	1	PP
16 HANDLE (A)	1	PP

PART NO. / NAME	QTY	MATERIAL
16a EMBEDDED HANDLE FITTING	1	SUS316L
17 HANDLE LEVER	1	PPG
18 PIN	1	PPG
19 SPRING	1	SUS304
21 BOLT (B)	1	SUS304
22 LOCKING PLATE	1	PPG
23 STOP RING (B)	4	SUS304
24 CAP (A)	1	PP

PART NO. / NAME	QTY	MATERIAL
25 GEAR BOX	1	RESIN, etc.
28 BOLT (C)	1	RESIN, etc.
156 FIXING RING	2	SCS13
157 SET SCREW (F)	4	SUS304
158 GASKET (L)	1	EPDM
182 O-RING (H)	1	EPDM
186 WASHER WITH RUBBER	1	SUS304+EPDM

SPECIFICATION LIST MANUAL

LEVER TYPE	SIDE GEAR TYPE	TOP GEAR TYPE
○	○	○

CHAIN TYPE	LONG STEM TYPE	FLOAT TYPE	WITH LIMIT SWITCH
○	○	○	○

* For other specifications, contact our sales office in your area.

PRODUCT MODEL CODE LIST

MANUAL

ACTUATION	TYPE	OPERATING SYSTEM	BODY MATERIAL	SEAL MATERIAL	CONNECTION	STANDARD	SIZE
V	LG	**	U	*	W	A	***
V MANUAL VALVE	LG TYPE 57L	LV LEVER TYPE SG SIDE GEAR TYPE	U U-PVC	E EPDM V FKM N NBR	W WAFER	A ANSI	080 80mm ~ 300 300mm

MANUAL

LUG BUTTERFLY VALVE TYPE 57TL

TYPE——VLGLV, VLGSG

CONNECTION / WAFER——ANSI

[LEVER TYPE]

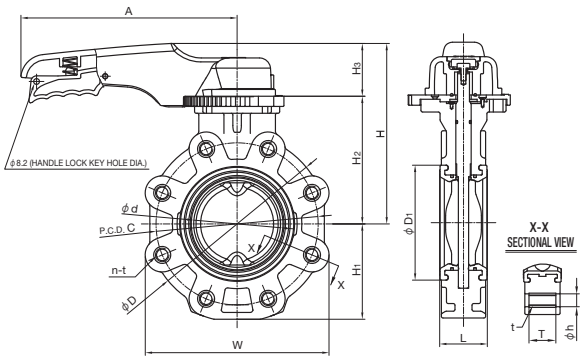

■ ANSI (UNIT: mm)

ANSI 150lb								
mm	d	C	n	h	D	D1	L	H
80	77	152.5	4	19	185	105	46	191
100	102	190.5	8	19	210	134	56	206
150	150	241.5	8	22	270	190	71	252
200	195	298.5	8	22	320	242	88	283

mm	H1	H2	H3	A	W	T	t
80	97	135	56	250	180	34.7	5/8–11 UNC
100	112	150	56	250	216	34.7	5/8–11 UNC
150	141	183	69	320	271	54.7	3/4–10 UNC
200	168	214	69	400	324	54.7	3/4–10 UNC

■ ANSI (UNIT: inch)

ANSI 150lb									
inch	mm	d	C	n	h	D	D1	L	H
3	80	3.03	6.00	4	0.75	7.28	4.13	1.81	7.52
4	100	4.02	7.50	8	0.75	8.27	5.28	2.20	8.11
6	150	5.91	9.50	8	0.87	10.63	7.48	2.80	9.92
8	200	7.68	11.75	8	0.87	12.60	9.53	3.43	11.14

inch	mm	H1	H2	H3	A	W	T	t
3	80	3.82	5.31	2.20	9.84	7.09	1.37	5/8–11 UNC
4	100	4.41	5.91	2.20	9.84	8.50	1.37	5/8–11 UNC
6	150	5.55	7.20	2.72	12.60	10.67	2.15	3/4–10 UNC
8	200	6.61	8.43	2.72	15.75	12.76	2.15	3/4–10 UNC

[GEAR TYPE]

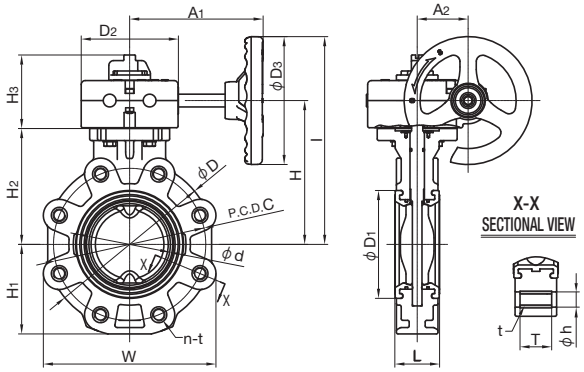

■ ANSI (UNIT: mm)

ANSI 150lb											
mm	d	C	n	h	D	D1	D2	D3	L	H	H1
80	77	152.5	4	19	185	105	122	160	46	165	97
100	102	190.5	8	19	210	134	122	160	56	180	112
150	150	241.5	8	22	270	190	122	160	71	210	141
200	195	298.5	8	22	320	242	122	160	88	241	168
250	252	362	12	25	400	302	122	160	112	276	202
300	303	432	12	25	465	360	188	300	129	340	236

mm	H2	H3	I	A1	A2	W	T	t	HANDLE ROTATION
80	130	92	245	167	64	180	34.7	5/8-11 UNC	
100	145	92	260	167	64	216	34.7	5/8-11 UNC	
150	175	92	290	167	64	271	54.7	3/4-10 UNC	
200	206	92	321	167	64	324	54.7	3/4-10 UNC	
250	241	92	356	167	64	404	79.7	7/8-9 UNC	
300	298	108	490	242	99	471	79.7	7/8-9 UNC	

■ ANSI (UNIT: inch)

ANSI 150lb													
inch	mm	d	C	n	h	D	D1	D2	D3	L	H	H1	H2
3	80	3.03	6.00	0.16	0.75	7.28	4.13	4.80	6.30	1.81	6.50	3.82	5.12
4	100	4.02	7.50	0.31	0.75	8.27	5.28	4.80	6.30	2.20	7.09	4.41	5.71
6	150	5.91	9.51	0.31	0.87	10.63	7.48	4.80	6.30	2.80	8.27	5.55	6.89
8	200	7.68	11.75	0.31	0.87	12.60	9.53	4.80	6.30	3.46	9.49	6.61	8.11
10	250	9.92	14.25	0.47	0.98	15.75	11.89	4.80	6.30	4.41	10.87	7.95	9.49
12	300	11.93	17.01	0.47	0.98	18.31	14.17	7.40	11.81	5.08	13.39	9.29	11.73

inch	mm	H3	I	A1	A2	W	T	t	HANDLE ROTATION	GEAR BOX TYPE
3	80	3.62	9.65	6.57	2.52	7.09	1.37	5/8-11 UNC	9.5	TYPE1
4	100	3.62	10.24	6.57	2.52	8.50	1.37	5/8-11 UNC		
6	150	3.62	11.42	6.57	2.52	10.67	2.15	3/4-10 UNC		
8	200	3.62	12.64	6.57	2.52	12.76	2.15	3/4-10 UNC		
10	250	3.62	14.02	6.57	2.52	15.91	3.14	7/8-9 UNC		
12	300	4.25	19.29	9.53	3.90	18.54	3.14	7/8-9 UNC		TYPE3

PDCPD LARGE SIZE BUTTERFLY VALVE

- THE USE OF PDCPD PLASTIC PROVIDES EXCELLENT RESISTANCE TO CORROSION (INCLUDING ELECTRIC CORROSION).
- LIGHTWEIGHT VALVE USING PDCPD PLASTIC WHOSE SPECIFIC GRAVITY IS 1/7 OF CAST IRON.
- SUPERIOR WATERTIGHT CHARACTERISTICS DUE TO FLANGED SEAT (EPDM)
- EXCELLENT FLOW CHARACTERISTICS DUE TO REDUCED THICKNESS OF VALVE ELEMENT
- HIGHER ABRASION RESISTANCE THAN CAST IRON



BASIC SPECIFICATIONS

VALVE TYPE——**PDCPD LARGE SIZE BUTTERFLY VALVE**

SIZE——**700 mm—1,200 mm(28 inch—48 inch)**

BODY MATERIAL——PDCPD

SEAL MATERIAL / SEAT——EPDM

CONNECTION / WAFER——**JIS10K, DIN, ANSI**

	FLUID TEMPERATURE	MAXIMUM WORKING PRESSURE (NORMAL TEMPERATURE) MPa{kgf/cm²}
PDCPD (700mm—1,000mm)	0℃ ~ 80℃	0.75 {7.7}
PDCPD (1,100mm—1,200mm)	0℃ ~ 60℃	0.75 {7.7}

NOTE The maximum working pressure is the value including the water hammer pressure. Be careful that the maximum working pressure is not exceeded during use.

* Concerning the allowable pressure for each temperature and material, see the technical documents at the end of this catalog.

PARTS LIST MANUAL

700mm-1,000mm

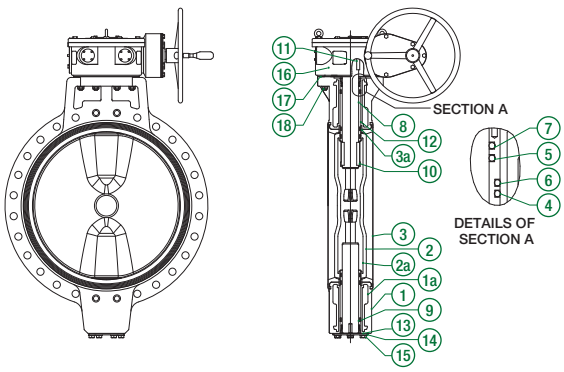

1,100mm-1,200mm

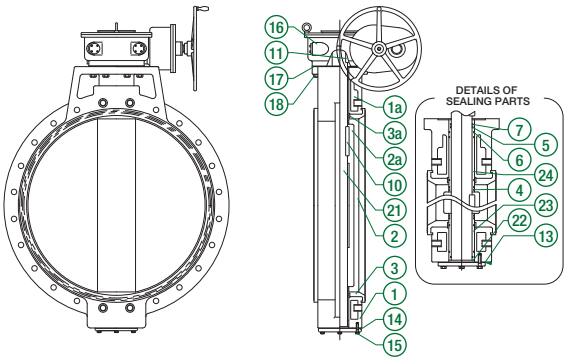

PART NO. / NAME	QTY	MATERIAL
①BODY	1	PDCPD
②DISC	1	PDCPD
③SEAT	1	EPDM
⑧STEM (A)	1	SUS403
⑨STEM (B)	1	SUS403
⑩KEY (A)	1	S45C
⑪KEY (B)	1	S45C

PART NO. / NAME	QTY	MATERIAL
⑫BUSH	2	BC6
⑬GASKET (A)	1	NON ASBESTOS SHEET
⑭STEM HOLDER	1	SUS304
⑮BOLT (A)	6	SUS304
⑯GEAR BOX	1	FC200, etc.
⑰GASKET (B)	1	NON ASBESTOS SHEET
⑱BOLT (B)	8	SUS304

PART NO. / NAME	QTY	MATERIAL
㉑STEM HOLDER	1	SUS304
㉒THRUST	1	BC6
㉓BUSH (A)	1	BC6
㉔BUSH (B)	1	BC6
1aBODY INSERT	1	FCD450
2aDISC INSERT	1	FCD450
3aSEAT RING	2	SUS304

SPECIFICATION LIST MANUAL

LEVER TYPE	SIDE GEAR TYPE	TOP GEAR TYPE
—	○	○

CHAIN TYPE	LONG STEM TYPE	FLOAT TYPE	WITH LIMIT SWITCH
—	○	—	—

* For other specifications, contact our sales office in your area.

COMPATIBLE ACTUATOR AUTOMATIC

ELECTRIC TYPE S

For detailed specifications, see P.137

PRODUCT MODEL CODE LIST
MANUAL

ACTUATION	TYPE	OPERATING SYSTEM	BODY MATERIAL	SEAL MATERIAL	CONNECTION	STANDARD	SIZE
V	PD	SG	D	E	W	*	***
V MANUAL VALVE	PD LARGE SIZE	SG SIDE GEAR TYPE	D PDCPD	E EPDM	W WAFER	1 JIS10K W — D DIN A ANSI	700 700mm ~ 1200 1,200mm

PRODUCT MODEL CODE LIST
AUTOMATIC

ACTUATION	TYPE	ACTUATOR TYPE	ACTION / POWER SOURCE	BODY MATERIAL	SEAL MATERIAL	CONNECTION	STANDARD	SIZE
A	PD	S	*	D	E	W	*	***
A AUTOMATIC VALVE	PD LARGE SIZE	S TYPE S	3 Three-Phase AC200V 4 Three-Phase AC400V	D PDCPD	E EPDM	W WAFER	1 JIS10K W — D DIN A ANSI	700 700mm ~ 1200 1,200mm

MANUAL

PDCPD LARGE SIZE BUTTERFLY VALVE

TYPE——VPDSG
CONNECTION / WAFER——JIS, DIN, ANSI

700mm-1,000mm

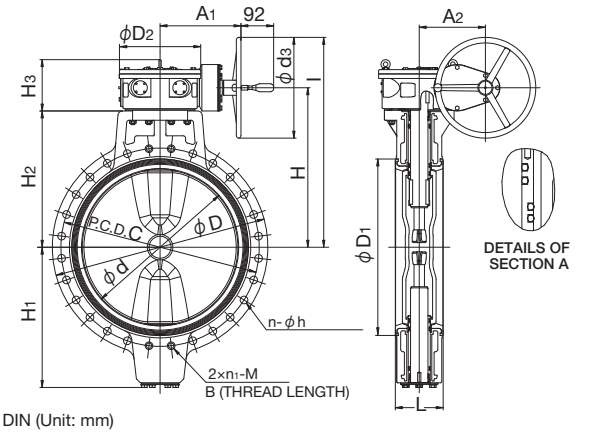

1,100mm-1,200mm

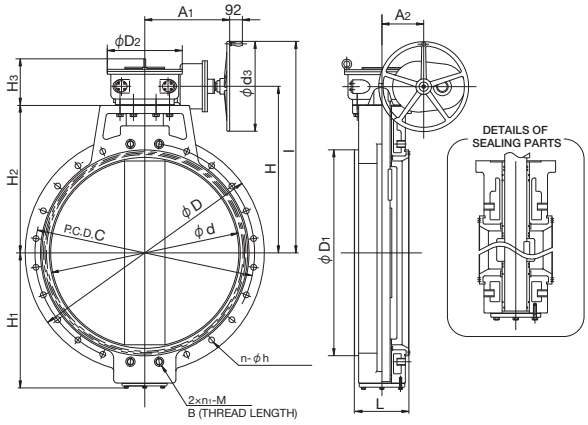

■ JIS, DIN (Unit: mm)

mm	d	D	D1	D2	d3	L	H	I	H1	H2	H3	A1	A2
700	670	928	760	350	435	206	685	897	589	590	251	402	285
800	770	1034	870	350	435	240	715	927	619	620	251	402	285
900	870	1168	978	350	635	240	800	1112	704	705	251	402	285
1000	970	1262	1080	460	635	300	845	1157	749	750	266	564	242
1100	1080	1380	1195	460	635	300	942	1260	780	840	264	564	242
1200	1170	1488	1300	460	635	350	992	1310	850	890	264	564	242

	JIS10K							WATERWORKS (JIS B 2062)							DIN PN10						
mm	C	h	N	n	n1	M	B	C	h	N	n	n1	M	B	C	h	N	n	n1	M	B
700	840	33	24	20	4	M30	35	–	–	–	–	–	–	–	840	33	24	20	4	M27	35
800	950	33	28	24	4	M30	35	–	–	–	–	–	–	–	950	33	28	20	4	M30	35
900	1050	33	28	24	4	M30	35	–	–	–	–	–	–	–	1050	33	28	24	4	M30	35
1000	1160	39	28	24	4	M36	35	–	–	–	–	–	–	–	1160	39	28	24	4	M33	42
1100	1270	39	28	24	4	M36	42	–	–	–	–	–	–	–	–	–	–	–	–	–	–
1200	1380	39	32	28	4	M36	42	–	–	–	–	–	–	–	1380	39	32	28	4	M36	42

■ ANSI (Unit: inch)

inch	mm	d	D	D1	D2	d3	L	H	I	H1	H2	H3	A1	A2
28	700	26.38	36.54	29.92	13.78	17.13	8.11	26.97	35.31	23.19	23.23	9.88	15.83	11.22
32	800	30.31	40.71	34.25	13.78	17.13	9.45	28.15	36.50	24.37	24.41	9.88	15.83	11.22
36	900	34.25	45.98	38.50	13.78	25.00	9.45	31.50	43.78	27.72	27.76	9.88	15.83	11.22
40	1000	38.19	49.69	42.52	18.11	25.00	11.81	33.27	45.55	29.49	29.53	10.47	22.20	9.53
44	1100	42.52	54.33	47.05	18.11	25.00	11.81	37.09	49.61	30.71	33.07	10.39	22.20	9.53
48	1200	46.06	58.58	51.18	18.11	25.00	13.78	39.06	51.57	33.46	35.04	10.39	22.20	9.53

		ANSI CLASS 125							ANSI CLASS 150							
inch	mm	C	h	N	n	n1	M	B	C	h	N	n	n1	M	B	GEAR BOX TYPE
28	700	–	–	–	–	–	–	–	34.00	1.38	28	24	4	1 1/4	1.38	
32	800	–	–	–	–	–	–	–	38.50	1.62	28	24	4	1 1/2	1.38	BRM-10
36	900	47.25	1.62	36	32	4	1 1/2	1.38	–	–	–	–	–	–	–	
40	1000	–	–	–	–	–	–	–	47.25	1.62	36	32	4	1 1/2	1.38	
44	1100	–	–	–	–	–	–	–	51.75	1.62	40	36	4	1 1/2	1.77	BRM-18
48	1200	56.00	1.62	44	40	4	1 1/2	1.77	56.00	1.62	44	40	4	1 1/2	1.77	

AUTOMATIC ELECTRIC TYPE S Three-Phase AC200V • Three-Phase AC400V

PDCPD LARGE SIZE BUTTERFLY VALVEVALVE

TYPE——APDS
CONNECTION / WAFER——JIS, DIN, ANSI

800 mm (32") - 1200 mm (48")

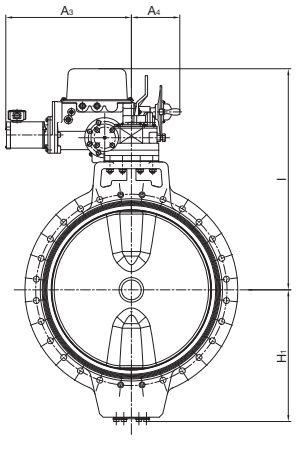

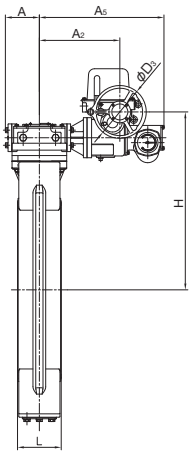

700 mm (28") ACTUATOR

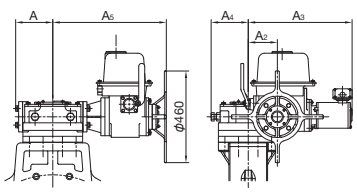

ACTUATOR SELECTION CHART

SIZE	ACTUATOR TYPE
700mm (28inch)	LTMD-02/BRM10
800mm (32inch)	LTMD-05/BRM10
900mm (36inch)	
1,000mm (40inch)	LTMD-05/BRM18
1,100mm (44inch)	LTMD-1/BRM18
1,200mm (48inch)	

For detailed specifications, see P.137

■ JIS, DIN (Unit: mm)

mm	L	H	H1	I	A	A2	A3	A4	A5
700	206	720	589	1048	186	146	521	186	570
800	240	892	619	1128	186	442	661	266	684
900	240	977	704	1213	186	442	689	266	684
1000	300	1008	749	1244	220	481	745	231	723
1100	300	881	780	1423	220	513	783	280	789
1200	350	911	850	1473	220	513	783	280	789

■ ANSI (Unit: inch)

inch	mm	L	H	H1	I	A	A2	A3	A4	A5
28	700	8.11	28.35	23.19	41.26	7.32	5.75	20.51	7.32	22.44
32	800	9.45	35.12	24.37	44.41	7.32	17.40	26.02	10.47	26.93
36	900	9.45	38.46	27.72	47.76	7.32	17.40	27.13	10.47	26.93
40	1000	11.81	39.69	29.49	48.98	8.66	18.94	29.33	9.09	28.46
44	1100	11.81	34.69	30.71	56.02	8.66	20.20	30.83	11.02	31.06
48	1200	13.78	35.87	33.46	57.99	8.66	20.20	30.83	11.02	31.06

ROTARY DAMPER

- BUTTERFLY VALVE FOR AIR VOLUME CONTROL (COMPLETE SEALING IS NOT AVAILABLE.)

BASIC SPECIFICATIONS

VALVE TYPE——**ROTARY DAMPER**

SIZE / LEVER TYPE——**40 mm—600 mm (1 1/2 inch—24 inch)**

BODY MATERIAL——**U-PVC** **PP** **PVDF**

SEAL MATERIAL——**EPDM** **FKM** **PTFE** **etc.**

CONNECTION / WAFER—**JIS10K, JIS5K, DIN, ANSI**

	FLUID TEMPERATURE	MAXIMUM WORKING PRESSURE (NORMAL TEMPERATURE) MPa{kgf/cm²}	
		40mm—200mm	250mm—600mm
U-PVC	0℃～ 50℃	0.1 {1.02}	0.05 {0.51}
PP	-20℃～ 80℃	0.1 {1.02}	0.05 {0.51}
PVDF	-20℃～120℃	0.1 {1.02}	0.05 {0.51}

NOTE The maximum working pressure is the value including the water hammer pressure. Be careful that the maximum working pressure is not exceeded during use.

* Concerning the allowable pressure for each temperature and material, see the technical documents at the end of this catalog.

MANUAL



(Body material - PVDF)

(Body material - U-PVC)

AUTOMATIC



PARTS LIST MANUAL

For parts list, see P. 105 and 106.

SPECIFICATION LIST MANUAL

LEVER TYPE	SIDE GEAR TYPE	TOP GEAR TYPE
○	○	○

CHAIN TYPE	LONG STEM TYPE	FLOAT TYPE	WITH LIMIT SWITCH
○	○	—	○

* For other specifications, contact our sales office in your area.

COMPATIBLE ACTUATOR AUTOMATIC

PNEUMATIC TYPE TA — For detailed specifications, see P.124

ELECTRIC TYPE T — For detailed specifications, see P.139

ELECTRIC TYPE S — For detailed specifications, see P.133

PRODUCT MODEL CODE LIST

MANUAL

AUTOMATIC

ACTUATION	TYPE	ACTUATOR TYPE	OPERATION SYSTEM / ACTION / POWER SOURCE	BODY MATERIAL	SEAL MATERIAL	CONNECTION	STANDARD	SIZE
*	**	**	*	*	*	W	*	***

ACTUATION

MANUAL
- V MANUAL VALVE

AUTOMATIC
- A AUTOMATIC VALVE

TYPE
- D7 TYPE 57
- D6 TYPE 56
- DP TYPE 75

ACTUATOR TYPE

PNEUMATIC
- K TYPE TA

ELECTRIC
- T TYPE T
- S TYPE S

* Specify only in the case of automatic type.

OPERATION SYSTEM / ACTION / POWER SOURCE

MANUAL
- LV LEVER TYPE
- SG SIDE GEAR TYPE

PNEUMATIC
- F DOUBLE ACTING
- G AIR TO OPEN
- S AIR TO CLOSE

ELECTRIC
- 1 Single-Phase 100V
- 2 Single-Phase 200V
- 3 Three-Phase AC200V
- 4 Three-Phase AC400V

BODY MATERIAL
- U U-PVC
- P PP
- F PVDF

SEAL MATERIAL
- E EPDM
- V FKM
- T PTFE

CONNECTION
- W WAFER

STANDARD
- 1 JIS10K
- 5 JIS5k
- W —
- D DIN
- A ANSI

SIZE
- 40 40mm
- ～
- 600 600mm

MANUAL | BODY MATERIAL U-PVC · PP

ROTARY DAMPER (BODY MATERIAL — U-PVC, PP)

TYPE —— VD7LV, VD6LV, VDPLV, VD7SG, VD6SG, VDPSG
CONNECTION / WAFER——JIS, DIN, ANSI

U-PVC, PP 40 mm - 200 mm

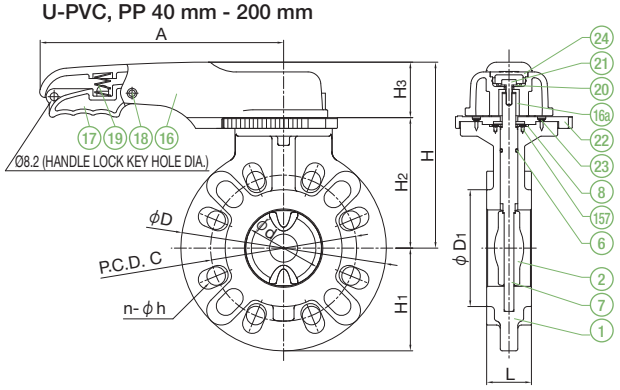

U-PVC, PP 250 mm - 350 mm

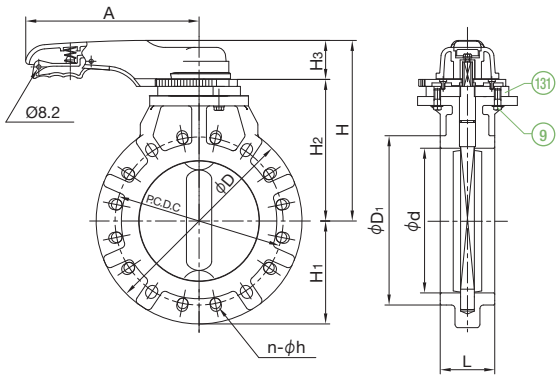

PP 400 mm

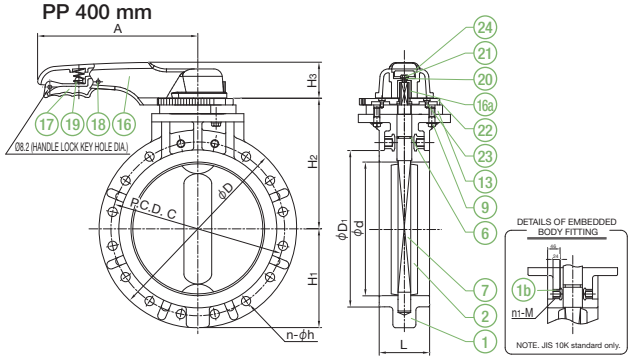

PP 450 mm - 600 mm

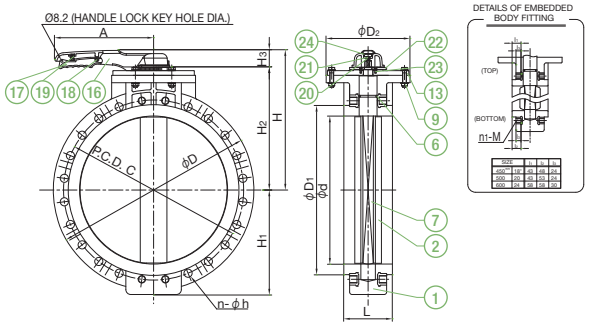

PART NO. / NAME	QTY	MATERIAL	MEMO
19 SPRING	1	SUS304	
20 WASHER (A)	1	SUS304	
21 BOLT (B)	1	SUS304	
22 LOCKING PLATE	1	PPG	
23 SET SCREW (B)	4	SUS304	
24 CAP (A)	1	PP	
157 SET SCREW (F)	4	SUS304	Used for 40 mm - 200 mm.
131 STEM HOLDER (C)	1	PP	Used for 250 mm - 600 mm.
1b EMBEDDED BODY FITTING	4	C3604	Used for JIS10K standard 400 mm.
	8		Used for JIS10K standard 450 mm - 600 mm.

PART NO. / NAME	QTY	MATERIAL	MEMO
1 BODY	1	BODY—DISC—STEM U-PVC—PP—U-PVC PP——PP——PP	
2 DISC	1		
7 STEM	1		
6 O-RING (C)	1	EPDM, FKM, etc.	
8 STEM HOLDER (A)	1	PP	Used for 40 mm - 200 mm.
9 BOLT (A)	3	SUS304	Used for 250 mm - 600 mm.
16 HANDLE (A)	1	PP	
16a EMBEDDED HANDLE FITTING	1	SUS316	Used for 40 mm - 400 mm.
17 HANDLE LEVER	1	PPG	
18 PIN	1	PPG	

■ 40 - 600 mm JIS DIN (UNIT: mm)

										JIS5K			JIS10K					DIN PN10		
mm	d	D	D1	L	H	H1	H2	H3	A	C	n	h	C	n	h	n1	M	C	n	h
40	46	150	86	32	156	75	100	56	220	95	4	15	105	4	19	–	–	110	4	18
50	57	165	96	35	166	83	110	56	220	105	4	15	120	4	19	–	–	125	4	18
65	70	185	116	37	176	93	120	56	220	130	4	15	140	4	19	–	–	145	4	18
80	78	211	120	37	191	106	135	56	250	145	4	19	150	8	19	–	–	160	8	18
100	103	238	152	47	206	119	150	56	250	165	8	19	175	8	19	–	–	180	8	18
125	129	263	190	57	237	132	168	69	320	200	8	19	210	8	23	–	–	210	8	18
150	150	285	208	62	252	143	183	69	320	230	8	19	240	8	23	–	–	240	8	22
200	195	340	242	76	283	170	214	69	400	280	8	23	290	12	23	–	–	295	8	22
250	251	421	332	96	342	211	273	69	400	345	12	23	355	12	25	–	–	350	12	23
300	303	488	400	116	399	244	330	69	400	390	12	23	400	16	25	–	–	400	12	23
350	352	539	414	116	426	270	357	69	400	435	12	25	445	16	25	–	–	460	16	23
400	394	600	470	157	451	300	382	69	400	495	16	25	510	14	27	2	M24	515	16	27
450	441	633	525	167	496	315	402	69	400	555	16	25	565	16	27	4	M24	565	20	27
500	488	699	575	177	526	350	432	69	400	605	20	25	620	16	27	4	M24	620	20	27
600	600	813	686	197	591	424	497	69	400	715	20	27	730	20	33	4	M30	725	20	30

■ 1 1/2 inch - 24 inch ANSI (UNIT: inch)

											ANSI CLASS 150		
inch	mm	d	D	D1	L	H	H1	H2	H3	A	C	n	h
1 1/2	40	1.81	5.91	3.39	1.26	6.14	2.95	3.94	2.20	8.66	3.68	4	0.62
2	50	2.24	6.50	3.78	1.38	6.54	3.27	4.33	2.20	8.66	4.75	4	0.75
2 1/2	65	2.76	7.28	4.57	1.46	6.93	3.66	4.72	2.20	8.66	5.50	4	0.75
3	80	3.07	8.31	4.72	1.46	7.52	4.17	5.31	2.20	9.84	6.00	4	0.75
4	100	4.06	9.37	5.98	1.85	8.11	4.69	5.91	2.20	9.84	7.50	8	0.75
5	125	5.08	10.35	7.48	2.24	9.33	5.20	6.61	2.72	12.60	8.50	8	0.88
6	150	5.91	11.22	8.19	2.44	9.92	5.63	7.20	2.72	12.60	9.50	8	0.88
8	200	7.68	13.39	9.53	2.99	11.14	6.69	8.43	2.72	15.75	11.75	8	0.88
10	250	9.88	16.57	13.07	3.78	13.46	8.31	10.75	2.72	15.75	14.25	12	0.98
12	300	11.93	19.21	15.75	4.57	15.71	9.61	12.99	2.72	15.75	17.01	12	0.98
14	350	13.86	21.22	16.30	4.57	16.77	10.63	14.06	2.72	15.75	18.74	12	1.14
16	400	15.51	23.62	18.50	6.18	17.76	11.81	15.04	2.72	15.75	21.24	16	1.14
18	450	17.36	24.92	20.67	6.57	19.53	12.40	15.83	2.72	15.75	22.76	16	1.26
20	500	19.21	27.52	22.64	6.97	20.71	13.78	17.01	2.72	15.75	25.00	20	1.26
24	600	23.62	32.01	27.01	7.76	23.27	16.69	19.57	2.72	15.75	29.51	20	1.38

MANUAL | BODY MATERIAL PVDF

ROTARY DAMPER (BODY MATERIAL — PVDF)

TYPE —— VD7LV, VD6LV, VDPLV, VD7SG, VD6SG, VDPSG
CONNECTION / WAFER——JIS, DIN, ANSI

PVDF 40 mm - 350 mm

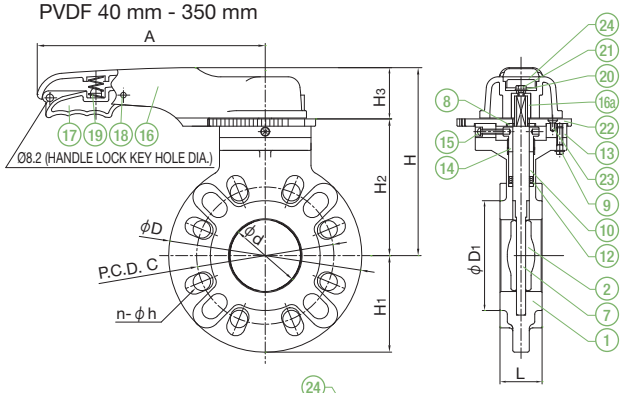

PVDF 300mm, 350 mm

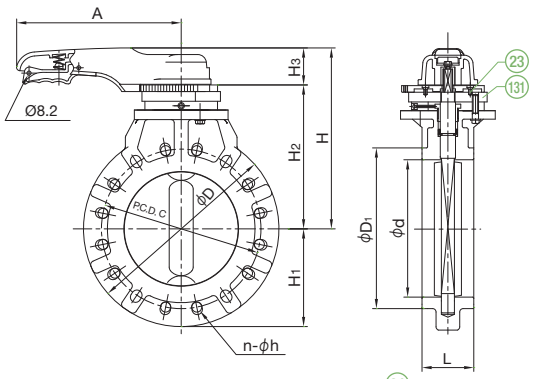

PVDF 400 mm

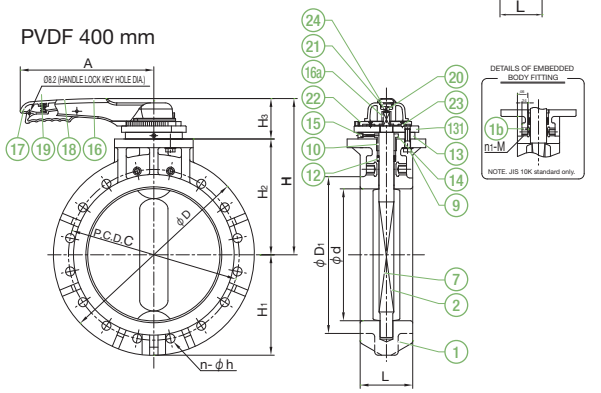

PVDF 450 mm - 600 mm

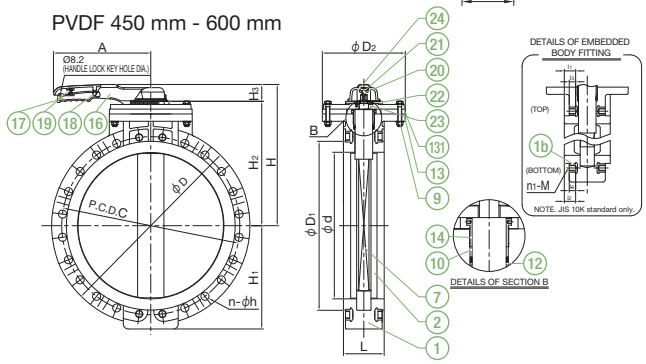

PART NO. / NAME	QTY	MATERIAL	MEMO
① BODY	1	PVDF	
② DISC	1	PVDF	
⑦ STEM	1	PVDF	
⑧ STEM HOLDER (A)	1	SUS304	Used for 40 mm - 250 mm.
⑨ BOLT (A)	4	SUS304	Used for 40 mm - 400 mm.
	3	SUS304	Used for 450 mm - 600 mm.
⑩ BUSH (A)	1	PTFE	Used for 40 mm - 350 mm.
		PVDF	Used for 400 mm - 600 mm.
⑫ V PACKING	1 SET	PTFE	

PART NO. / NAME	QTY	MATERIAL	MEMO
⑬ SPACER (A)	1 SET	C-PVC	
⑭ GLAND	1	PVDF	
⑮ SCREW (A)	1	SUS304	Used for 40 mm - 400 mm.
⑯a EMBEDDED HANDLE FITTING	1	SUS316	Used for 40 mm - 400 mm.
⑰ HANDLE LEVER	1	PPG	
⑱ PIN	1	PPG	
⑲ SPRING	1	SUS304	
⑳ WASHER (A)	1	SUS304	
㉑ BOLT (B)	1	SUS304	

PART NO. / NAME	QTY	MATERIAL	MEMO
㉒ LOCKING PLATE	1	PPG	
㉓ SET SCREW (B)	4	SUS304	300mm, 350mm, 450mm—600mm
	2		Used for 40 mm - 250 mm, 400 mm.
㉔ CAP (A)	1	PP	
⑬① STEM HOLDER (C)	1	PP	Used for 300 mm - 600 mm.
①b EMBEDDED BODY FITTING	4	C3604	Used for JIS10K standard 400 mm.
	8		Used for JIS10K standard 450 mm - 600 mm.

■ 40 - 600 m JIS DIN (UNIT: mm)

										JIS5K			JIS10K					DIN PN10		
mm	d	D	D1	L	H	H1	H2	H3	A	C	n	h	C	n	h	n1	M	C	n	h
40	46	150	86	32	179	75	123	56	220	95	4	15	105	4	19	–	–	110	4	18
50	57	165	96	35	189	83	133	56	220	105	4	15	120	4	19	–	–	125	4	18
65	70	185	116	37	199	93	143	56	220	130	4	15	140	4	19	–	–	145	4	18
80	78	211	120	37	214	106	158	56	250	145	4	19	150	8	19	–	–	160	8	18
100	103	238	152	47	229	119	173	56	250	165	8	19	175	8	19	–	–	180	8	18
125	128	263	190	57	257	132	188	69	320	200	8	19	210	8	23	–	–	210	8	18
150	150	285	208	62	272	143	203	69	320	230	8	19	240	8	23	–	–	240	8	22
200	195	340	264	76	303	170	234	69	400	280	8	19	290	12	23	–	–	295	8	22
250	251	409	322	96	346	205	277	69	400	345	12	23	355	12	25	–	–	350	12	23
300	303	472	388	116	419	236	350	69	400	390	12	23	400	16	25	–	–	400	12	23
350	352	524	404	116	446	262	377	69	400	435	12	25	445	16	25	–	–	460	16	23
400	394	600	470	157	471	300	402	69	400	495	16	25	510	14	27	2	M24	515	16	27
450	441	630	525	167	491	315	422	69	400	555	16	25	565	16	27	4	M24	565	20	27
500	488	680	575	177	521	350	452	69	400	605	20	25	620	16	27	4	M24	620	20	27
600	600	790	686	197	586	424	517	69	400	715	20	27	730	20	33	4	M30	725	20	30

■ 1 1/2 inch - 24 inch ANSI (UNIT: inch)

											ANSI CLASS 150		
inch	mm	d	D	D1	L	H	H1	H2	H3	A	C	n	h
1 1/2	40	1.81	5.91	3.39	1.26	7.05	2.95	4.84	2.20	8.66	3.88	4	0.62
2	50	2.24	6.50	3.78	1.38	7.44	3.27	5.24	2.20	8.66	4.75	4	0.75
2 1/2	65	2.76	7.28	4.57	1.46	7.83	3.66	5.63	2.20	8.66	5.50	4	0.75
3	80	3.07	8.31	4.72	1.46	8.43	4.17	6.22	2.20	9.84	6.00	4	0.75
4	100	4.06	9.37	5.98	1.85	9.02	4.69	6.81	2.20	9.84	7.50	8	0.75
5	125	5.04	10.35	7.48	2.24	10.12	5.20	7.40	2.72	12.60	8.50	8	0.88
6	150	5.91	11.22	8.19	2.44	10.71	5.63	7.99	2.72	12.60	9.50	8	0.88
8	200	7.68	13.39	10.39	2.99	11.93	6.69	9.21	2.72	15.75	11.75	8	0.88
10	250	9.88	16.10	12.68	3.78	13.62	8.07	10.91	2.72	15.75	14.25	12	0.98
12	300	11.93	18.58	15.28	4.57	16.50	9.29	13.78	2.72	15.75	17.01	12	0.98
14	350	13.86	20.63	15.91	4.57	17.56	10.31	14.84	2.72	15.75	18.74	12	1.14
16	400	15.51	23.62	18.50	6.18	18.54	11.81	15.83	2.72	15.75	21.24	16	1.14
18	450	17.36	24.80	20.67	6.57	19.33	12.40	16.61	2.72	15.75	22.76	16	1.26
20	500	19.21	26.77	22.64	6.97	20.51	13.78	17.80	2.72	15.75	25.00	20	1.26
24	600	23.62	31.10	27.01	7.76	23.07	16.69	20.35	2.72	15.75	29.51	20	1.38

AUTOMATIC PNEUMATIC TYPE TA DOUBLE ACTING AIR TO OPEN AIR TO CLOSE

ROTARY DAMPER TYPE 57

TYPE——AD7K
CONNECTION / WAFER——JIS, DIN, ANSI

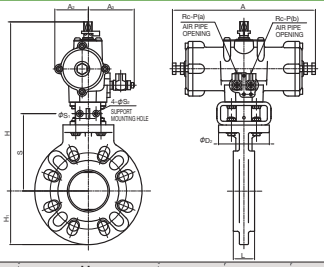

■ JIS, DIN (Unit: mm)

mm	L	D_2	H		H_1		A	A_2	A_3	S	S_1	S_2	P
			U-PVC, PP	PVDF	U-PVC, PP	PVDF							
40	32	100	263	283	75	75	210	46	84	117.5	32	7	1/4
50	35	100	273	293	83	83	210	46	84	127.5	32	7	1/4
65	37	100	283	303	93	93	210	46	84	137.5	32	7	1/4
80	37	100	298	318	106	106	210	46	84	152.5	32	7	1/4
100	47	100	313	333	119	119	210	46	84	167.5	32	7	1/4
125	57	140	382	402	132	132	292	71	93	185.5	42	9	1/4
150	62	140	397	417	143	143	292	71	93	200.5	42	9	1/4
200	76	140	459	479	170	170	362	86	105	231.5	42	9	1/4
250	96	180	494	514	211	205	362	86	105	266.5	42	9	1/4
300	116	235	570	590	244	236	362	86	105	–	–	–	1/4
350	116	235	622	642	270	262	440	90	108	–	–	–	1/4

■ ANSI (Unit: inch)

inch	mm	L	D_2	H		H_1		A	A_2	A_3	S	S_1	S_2	P
				U-PVC, PP	PVDF	U-PVC, PP	PVDF							
1 1/2	40	1.26	3.94	10.35	11.14	2.95	2.95	8.27	1.81	3.31	4.63	1.26	0.28	1/4
2	50	1.38	3.94	10.75	11.54	3.27	3.27	8.27	1.81	3.31	5.02	1.26	0.28	1/4
2 1/2	65	1.46	3.94	11.14	11.93	3.66	3.66	8.27	1.81	3.31	5.41	1.26	0.28	1/4
3	80	1.46	3.94	11.73	12.52	4.17	4.17	8.27	1.81	3.31	6.00	1.26	0.28	1/4
4	100	1.85	3.94	12.32	13.11	4.69	4.69	8.27	1.81	3.31	6.59	1.26	0.28	1/4
5	125	2.24	5.51	15.04	15.83	5.20	5.20	11.50	2.80	3.66	7.30	1.65	0.35	1/4
6	150	2.44	5.51	15.63	16.42	5.63	5.63	11.50	2.80	3.66	7.89	1.65	0.35	1/4
8	200	2.99	5.51	18.07	18.86	6.69	6.69	14.25	3.39	4.13	9.11	1.65	0.35	1/4
10	250	3.78	7.09	19.45	20.24	8.31	8.07	14.25	3.39	4.13	10.49	1.65	0.35	1/4
12	300	4.57	9.25	22.44	23.23	9.61	9.29	14.25	3.39	4.13	–	–	–	1/4
14	350	4.57	9.25	24.49	25.28	10.63	10.31	17.32	3.54	4.25	–	–	–	1/4

ACTUATOR SELECTION CHART

SIZE	ACTUATOR TYPE
40mm (1 1/2inch)	TA2A-050D
50mm (2inch)	
65mm (2 1/2inch)	
80mm (3inch)	
100mm (4inch)	
125mm (5inch)	TA2A-080D
150mm (6inch)	
200mm (8inch)	TA2A-100D
250mm (10inch)	
300mm (12inch)	
350mm (14inch)	TA2A-125D

For detailed specifications, see P.124

AUTOMATIC PNEUMATIC TYPE TA DOUBLE ACTING AIR TO OPEN AIR TO CLOSE

ROTARY DAMPER TYPE 57

TYPE——AD7K
CONNECTION / WAFER——JIS, DIN, ANSI

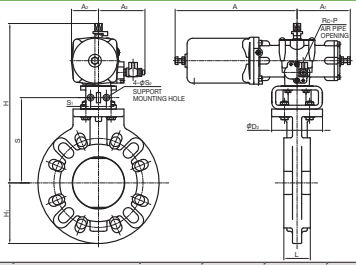

■ JIS, DIN (Unit: mm)

mm	L	D_2	H		H_1		A	A_1	A_2	A_3	S	H_2	H_3	H_3
			U-PVC, PP	PVDF	U-PVC, PP	PVDF								
40	32	100	263	283	75	75	240	105	53	98	137.5	32	7	1/4
50	35	100	273	293	83	83	240	105	53	98	147.5	32	7	1/4
65	37	100	283	303	93	93	240	105	53	98	157.5	32	7	1/4
80	37	100	298	318	106	106	240	105	53	98	172.5	32	7	1/4
100	47	100	313	333	119	119	240	105	53	98	187.5	32	7	1/4
125	57	140	382	402	132	132	341	146	83	107	205.5	42	9	1/4
150	62	140	397	417	143	143	341	146	83	107	220.5	42	9	1/4
200	76	140	459	479	170	170	417	181	103	119	251.5	42	9	1/4
250	96	180	494	514	211	205	417	181	103	119	286.5	42	9	1/4
300	116	235	570	590	244	236	417	181	103	119	–	–	–	1/4
350	116	235	622	642	270	262	542	220	119	122	–	–	–	1/4

■ ANSI (Unit: inch)

inch	mm	L	D_2	H		H_1		A	A_1	A_2	A_3	S	H_2	H_3	H_3
				U-PVC, PP	PVDF	U-PVC, PP	PVDF								
1 1/2	40	1.26	3.94	10.35	11.14	2.95	2.95	9.45	4.13	2.09	3.86	5.41	1.26	0.28	1/4
2	50	1.38	3.94	10.75	11.54	3.27	3.27	9.45	4.13	2.09	3.86	5.81	1.26	0.28	1/4
2 1/2	65	1.46	3.94	11.14	11.93	3.66	3.66	9.45	4.13	2.09	3.86	6.20	1.26	0.28	1/4
3	80	1.46	3.94	11.73	12.52	4.17	4.17	9.45	4.13	2.09	3.86	6.79	1.26	0.28	1/4
4	100	1.85	3.94	12.32	13.11	4.69	4.69	9.45	4.13	2.09	3.86	7.38	1.26	0.28	1/4
5	125	2.24	5.51	15.04	15.83	5.20	5.20	13.43	5.75	3.27	4.21	8.09	1.65	0.35	1/4
6	150	2.44	5.51	15.63	16.42	5.63	5.63	13.43	5.75	3.27	4.21	8.68	1.65	0.35	1/4
8	200	2.99	5.51	18.07	18.86	6.69	6.69	16.42	7.13	4.06	4.69	9.90	1.65	0.35	1/4
10	250	3.78	7.09	19.45	20.24	8.31	8.07	16.42	7.13	4.06	4.69	11.28	1.65	0.35	1/4
12	300	4.57	9.25	22.44	23.23	9.61	9.29	16.42	7.13	4.06	4.69	–	–	–	1/4
14	350	4.57	9.25	24.49	25.28	10.63	10.31	21.34	8.66	4.69	4.80	–	–	–	1/4

ACTUATOR SELECTION CHART

SIZE	ACTUATOR TYPE
40mm (1 1/2inch)	TA2A-050R
50mm (2inch)	
65mm (2 1/2inch)	
80mm (3inch)	
100mm (4inch)	
125mm (5inch)	TA2A-080R
150mm (6inch)	
200mm (8inch)	TA2A-100R2
250mm (10inch)	
300mm (12inch)	
350mm (14inch)	TA2A-125R2

For detailed specifications, see P.124

AUTOMATIC | PNEUMATIC | TYPE TA | DOUBLE ACTING | AIR TO OPEN | AIR TO CLOSE

ROTARY DAMPER TYPE 56

TYPE——AD6K
CONNECTION / WAFER——JIS, DIN, ANSI

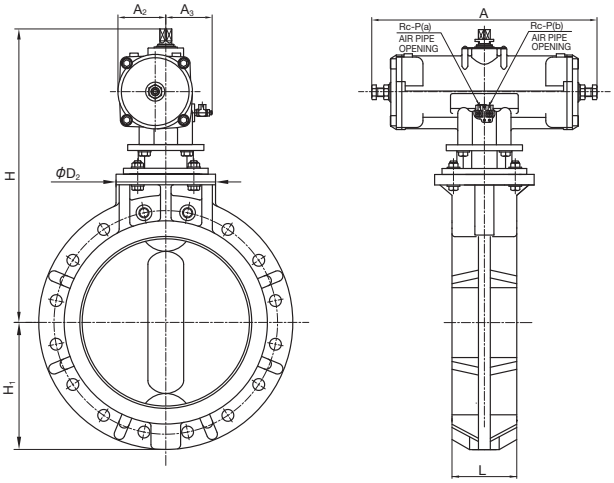

ACTUATOR SELECTION CHART

SIZE	ACTUATOR TYPE
400mm (16inch)	TA2A-160D

For detailed specifications, see P.124

■ JIS, DIN (Unit: mm)

mm	L	D2	H		H1	A	A2	A3	P
			PP	PVDF					
400	157	235	693	709	300	532	113	116	1/4

■ ANSI (Unit: inch)

inch	mm	L	D2	H		H1	A	A2	A3	P
				PP	PVDF					
16	400	6.18	9.25	27.28	27.91	11.81	20.94	4.45	4.57	1/4

AUTOMATIC | PNEUMATIC | TYPE TA | DOUBLE ACTING | AIR TO OPEN | AIR TO CLOSE

ROTARY DAMPER TYPE 56

TYPE——AD6K
CONNECTION / WAFER——JIS, DIN, ANSI

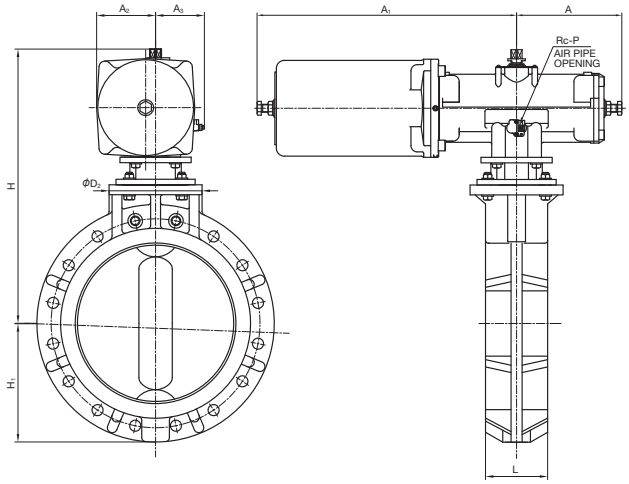

ACTUATOR SELECTION CHART

SIZE	ACTUATOR TYPE
400mm (16inch)	TA2A-160R2

For detailed specifications, see P.124

■ JIS, DIN (Unit: mm)

mm	L	D2	H		H1	A	A1	A2	A3	P
			PP	PVDF						
400	157	235	693	709	300	658	266	149	130	1/4

■ ANSI (Unit: inch)

inch	mm	L	D2	H		H1	A	A1	A2	A3	P
				PP	PVDF						
16	400	6.18	9.25	27.28	27.91	11.81	25.91	10.47	5.87	5.12	1/4

AUTOMATIC PNEUMATIC TYPE TA DOUBLE ACTING AIR TO OPEN AIR TO CLOSE

ROTARY DAMPER TYPE 75

TYPE——ADPK
CONNECTION / WAFER——JIS, DIN, ANSI

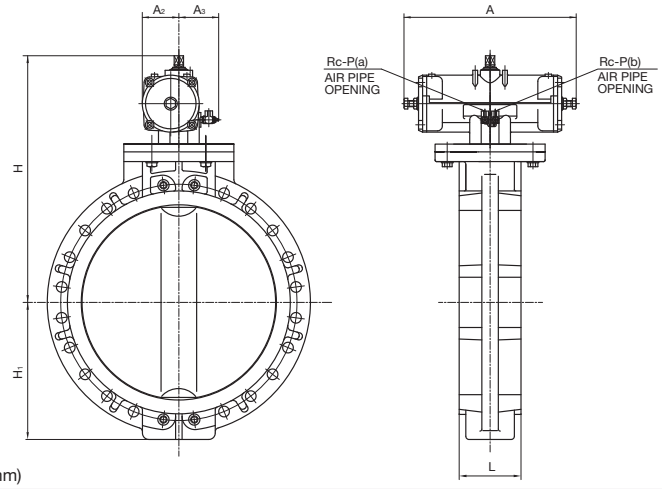

ACTUATOR SELECTION CHART

SIZE	ACTUATOR TYPE
450mm (18inch)	TA2A-160D
500mm (20inch)	
600mm (24inch)	

For detailed specifications, see P.124

■ JIS, DIN (Unit: mm)

mm	L	H		H₁	A	A₂	A₃	P
		PP	PVDF					
450	167	671	680	315	532	113	116	1/4
500	177	701	709	350	532	113	116	1/4
600	197	766	772	424	532	113	116	1/4

■ ANSI (Unit: inch)

inch	mm	L	H		H₁	A	A₂	A₃	P
			PP	PVDF					
18	450	6.57	26.42	26.77	12.40	20.94	4.45	4.57	1/4
20	500	6.97	27.60	27.91	13.78	20.94	4.45	4.57	1/4
24	600	7.76	30.16	30.39	16.69	20.94	4.45	4.57	1/4

AUTOMATIC PNEUMATIC TYPE TA DOUBLE ACTING AIR TO OPEN AIR TO CLOSE

ROTARY DAMPER TYPE 75

TYPE——ADPK
CONNECTION / WAFER——JIS, DIN, ANSI

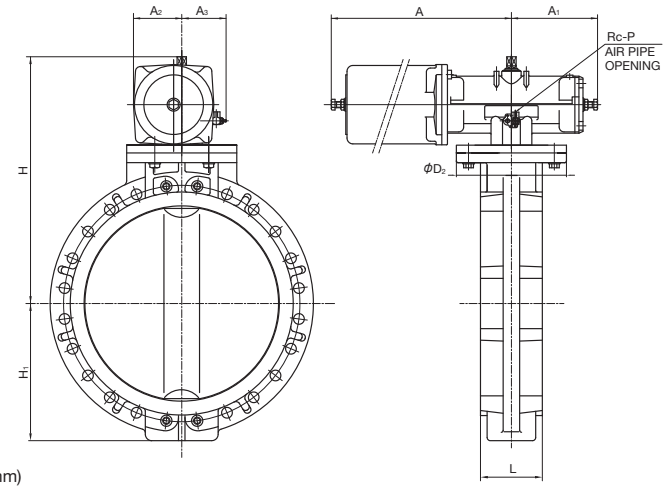

ACTUATOR SELECTION CHART

SIZE	ACTUATOR TYPE
450mm (18inch)	TA2A-160R2
500mm (20inch)	
600mm (24inch)	

For detailed specifications, see P.124

■ JIS, DIN (Unit: mm)

mm	L	D₂	H		H₁	A	A₁	A₂	A₃	P
			PP	PVDF						
450	167	340	671	680	315	658	266	149	130	1/4
500	177	340	701	709	350	658	266	149	130	1/4
600	197	340	766	772	424	658	266	149	130	1/4

■ ANSI (Unit: inch)

inch	mm	L	D₂	H		H₁	A	A₁	A₂	A₃	P
				PP	PVDF						
18	450	6.57	13.39	26.42	26.77	12.40	25.91	10.47	5.87	5.12	1/4
20	500	6.97	13.39	27.60	27.91	13.78	25.91	10.47	5.87	5.12	1/4
24	600	7.76	13.39	30.16	30.39	16.69	25.91	10.47	5.87	5.12	1/4

AUTOMATIC | ELECTRIC | TYPE T | Single-Phase 100V • Single-Phase 200V

ROTARY DAMPER TYPE 57, 56

TYPE——AD7T, AD6T
CONNECTION / WAFER——JIS, DIN, ANSI

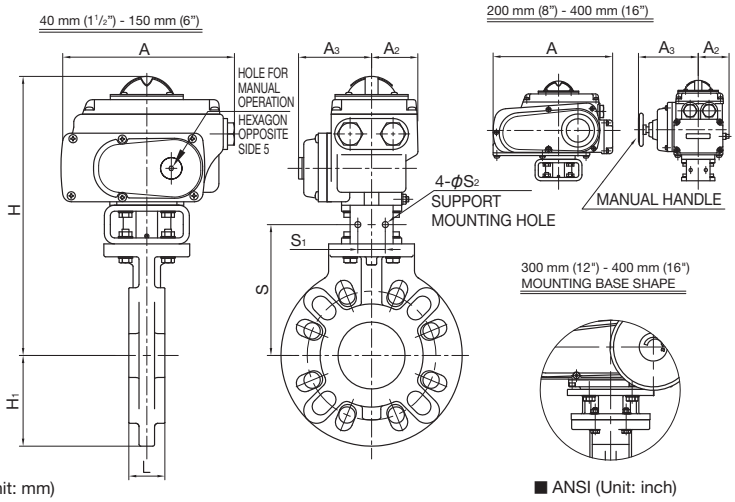

ACTUATOR SELECTION CHART

SIZE	ACTUATOR TYPE
40mm (1 1/2inch)	T-0
50mm (2inch)	
65mm (2 1/2inch)	
80mm (3inch)	
100mm (4inch)	
125mm (5inch)	
150mm (6inch)	
200mm (8inch)	T-2
250mm (10inch)	
300mm (12inch)	
350mm (14inch)	
400mm (16inch)	T-3

For detailed specifications, see P.139

■ JIS, DIN (Unit: mm)

mm	L	H		H1	A	A2	A3	S	S1	S2
		U-PVC, PP	PVDF							
40	32	290	310	75	202	53.8	85	117.5	32	7
50	35	300	320	83	202	53.8	85	127.5	32	7
65	37	310	330	93	202	53.8	85	137.5	32	7
80	37	325	345	106	202	53.8	85	152.5	32	7
100	47	340	360	119	202	53.8	85	167.5	32	7
125	57	361	381	128	202	53.8	85	185.5	42	9
150	62	376	396	143	202	53.8	85	200.5	42	9
200	76	455	475	175	310	85	154	231.5	42	9
250	96	490	510	211	310	85	154	266.5	42	9
300	116	566	586	244	310	85	154	–	–	–
350	116	593	613	270	310	85	154	–	–	–
400	157	650	670	300	388	136	245.5	–	–	–

■ ANSI (Unit: inch)

inch	mm	L	H		H1	A	A2	A3	S	S1	S2
			U-PVC, PP	PVDF							
1 1/2	40	1.26	11.42	12.20	2.95	7.95	2.12	3.35	4.63	1.26	0.28
2	50	1.38	11.81	12.60	3.27	7.95	2.12	3.35	5.02	1.26	0.28
2 1/2	65	1.46	12.20	12.99	3.66	7.95	2.12	3.35	5.41	1.26	0.28
3	80	1.46	12.80	13.58	4.17	7.95	2.12	3.35	6.00	1.26	0.28
4	100	1.85	13.39	14.17	4.69	7.95	2.12	3.35	6.59	1.26	0.28
5	125	2.24	14.21	15.00	5.04	7.95	2.12	3.35	7.30	1.65	0.35
6	150	2.44	14.80	15.59	5.63	7.95	2.12	3.35	7.89	1.65	0.35
8	200	2.99	17.91	18.70	6.89	12.20	3.35	6.06	9.11	1.65	0.35
10	250	3.78	19.29	20.08	8.31	12.20	3.35	6.06	10.49	1.65	0.35
12	300	4.57	22.28	23.07	9.61	12.20	3.35	6.06	–	–	–
14	350	4.57	23.35	24.13	10.63	12.20	3.35	6.06	–	–	–
16	400	6.18	25.59	26.38	11.81	15.28	5.35	9.67	–	–	–

AUTOMATIC | ELECTRIC | TYPE S | Three-Phase AC200V • Three-Phase AC400V

ROTARY DAMPER TYPE 57, 56, 75

TYPE——AD7S, AD6S, ADPS
CONNECTION / WAFER——JIS, DIN, ANSI

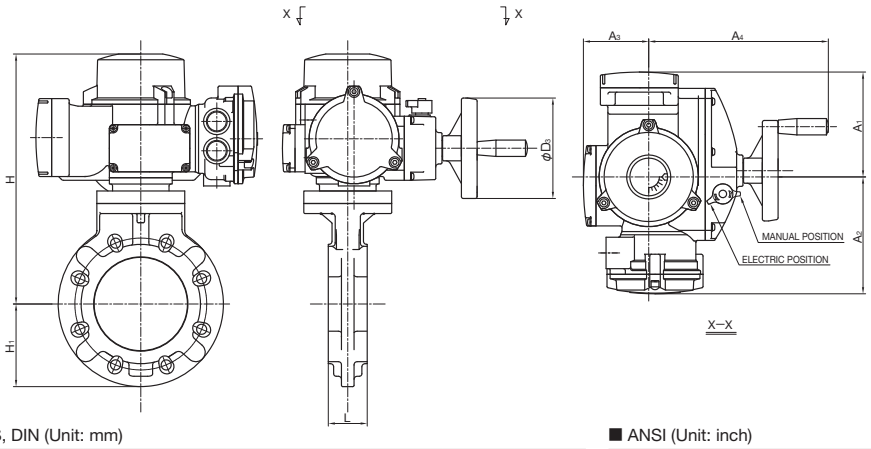

ACTUATOR SELECTION CHART

SIZE	ACTUATOR TYPE
40mm (1 1/2inch)	SRJ-010
50mm (2inch)	
65mm (2 1/2inch)	
80mm (3inch)	
100mm (4inch)	
125mm (5inch)	
150mm (6inch)	
200mm (8inch)	SRJ-020
250mm (10inch)	
300mm (12inch)	
350mm (14inch)	
400mm (16inch)	SRJ-060
450mm (18inch)	
500mm (20inch)	
600mm (24inch)	

For detailed specifications, see P.133

■ JIS, DIN (Unit: mm)

mm	L	H		H1	A	A2	A3	A4
		U-PVC, PP	PVDF					
40	32	313	333	75	167	186	104	286
50	35	323	343	83	167	186	104	286
65	37	333	353	93	167	186	104	286
80	37	348	368	106	167	186	104	286
100	47	363	383	119	167	186	104	286
125	57	398	418	132	167	186	104	286
150	62	413	433	143	167	186	104	286
200	76	444	464	175	167	186	104	286
250	96	486	506	211	167	186	104	286
300	116	543	563	244	167	186	104	286
350	116	570	590	270	167	186	104	286
400	157	612	632	300	191	202	130	330
450	167	623	648	315	191	202	130	330
500	177	653	678	350	191	202	130	330
600	197	717	742	424	191	202	130	330

■ ANSI (Unit: inch)

inch	mm	L	H		H1	A	A2	A3	A4
			U-PVC, PP	PVDF					
1 1/2	40	1.26	12.32	13.11	2.95	6.57	7.32	4.09	11.26
2	50	1.38	12.72	13.50	3.27	6.57	7.32	4.09	11.26
2 1/2	65	1.46	13.11	13.90	3.66	6.57	7.32	4.09	11.26
3	80	1.46	13.70	14.49	4.17	6.57	7.32	4.09	11.26
4	100	1.85	14.29	15.08	4.69	6.57	7.32	4.09	11.26
5	125	2.24	15.67	16.46	5.20	6.57	7.32	4.09	11.26
6	150	2.44	16.26	17.05	5.63	6.57	7.32	4.09	11.26
8	200	2.99	17.48	18.27	6.89	6.57	7.32	4.09	11.26
10	250	3.78	19.13	19.92	8.31	6.57	7.32	4.09	11.26
12	300	4.57	21.38	22.17	9.61	6.57	7.32	4.09	11.26
14	350	4.57	22.44	23.23	10.63	6.57	7.32	4.09	11.26
16	400	6.18	24.09	24.88	11.81	7.52	7.95	5.12	12.99
18	450	6.57	24.53	25.51	12.40	7.52	7.95	5.12	12.99
20	500	6.97	25.71	26.69	13.78	7.52	7.95	5.12	12.99
24	600	7.76	28.23	29.21	16.69	7.52	7.95	5.12	12.99

CONTROL VALVE

- OUR ORIGINAL SPECIAL PLUG SHAPE REDUCES EFFECTS OF FLUID VISCOSITY AND ALLOWS FOR HIGHLY ACCURATE FLOW CONTROL (IDEAL FOR CORROSIVE FLUID).
- USE OF HIGH-PERFORMANCE ALL ELECTRONIC SERVO ACTUATOR (ELECTRICALLY DRIVEN)
- EMBEDDED WITH ELECTRONIC LIMITER AND OVERLOAD PROTECTION CIRCUIT FOR ALL CYCLE TIME.

BASIC SPECIFICATIONS

VALVE TYPE——**CONTROL VALVE**
SIZE——**15 mm—100 mm (1/2 inch—4 inch)**
BODY MATERIAL——**U-PVC** **PVDF**
SEAL MATERIAL / SEAT——**EPDM** **Viflon®F FKM-F** **Viflon®-C FKM-C** **etc.**
CONNECTION / FLANGED——**JIS10K, DIN, ANSI**
HIGH PURITY SERIES——**LUBRICANT FREE**

	FLUID TEMPERATURE	MAXIMUM WORKING PRESSURE (NORMAL TEMPERATURE) MPa{kgf/cm²}					CONNECTION METHOD
		15mm	25mm	50mm	80mm	100mm	FLANGED
U-PVC	0℃ ~ 50℃	1.0 {10.2}			0.75 {7.7}		○
PVDF	0℃ ~ 90℃	1.0 {10.2}			—		○

NOTE The maximum working pressure is the value including the water hammer pressure. Be careful that the maximum working pressure is not exceeded during use.
* Concerning the allowable pressure for each temperature and material, see the technical documents at the end of this catalog.

COMPATIBLE ACTUATOR AUTOMATIC

PNEUMATIC TYPE AV — For detailed specifications, see P.120

ELECTRIC TYPE M — For detailed specifications, see P.129



PRODUCT MODEL CODE LIST
AUTOMATIC

ACTUATION	TYPE	ACTUATOR TYPE	ACTION / POWER SOURCE	BODY MATERIAL	SEAL MATERIAL	CONNECTION	STANDARD	SIZE	HIGH PURITY SERIES	POSITIONER
A	CV	*	*	*	*	F	*	***	1	**
A AUTOMATIC VALVE	CV CV	PNEUMATIC V TYPE AV; ELECTRIC M TYPE M	PNEUMATIC F DOUBLE ACTING, G AIR TO OPEN; ELECTRIC 1 Single-Phase 100V, 2 Single-Phase 200V, D DC24V	U U-PVC, F PVDF	E EPDM, F Viflon®F FKM-F, C Viflon®C FKM-C	F FLANGED	1 JIS10K, D DIN, A ANSI	015 15mm ~ 100 100mm	1 LUBRICANT FREE	PNEUMATIC 01 E/P POSITIONER, 02 P/P POSITIONER, 03 E/P FR SET, 04 P/P FR SET

* Specify only in the case of pneumatic type.

NOTE DIN standard type is U-PVC 15 and 25 mm only. ANSI standard type is U-PVC 15, 25 and 50 mm only.

Cv VALUE PER OPENING DEGREE GRAPH

15 mm, 25 mm STANDARD Cv VALUE TYPE

EQUAL-PERCENTAGE CHARACTERISTICS

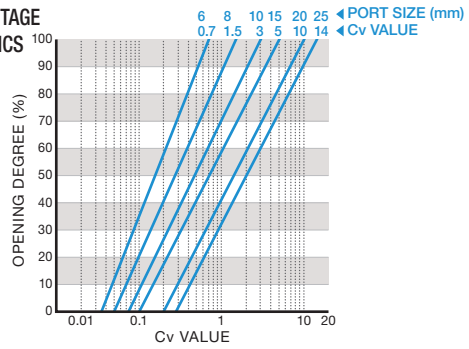

SIZE (mm)		25					
		15					
PORT SIZE [mm]		6	8	10	15	20	25
Cv VALUE		0.7	1.5	3	5	10	14
RANGEABILITY		20:1	30:1	40:1	50:1	50:1	50:1
STROKE (mm)	SIZE 15 mm	17	16	17	18	–	–
	SIZE 25 mm	17	16	16	16	22	24

LINEAR CHARACTERISTICS

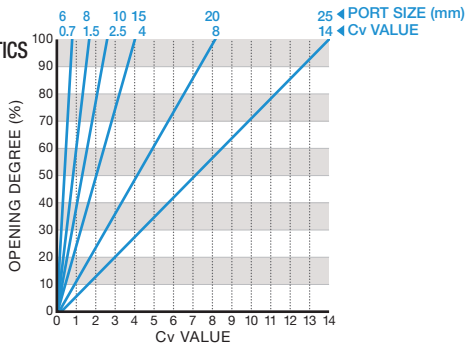

SIZE (mm)		25					
		15					
PORT SIZE [mm]		6	8	10	15	20	25
Cv VALUE		0.7	1.5	2.5	4	8	14
RANGEABILITY		20:1	25:1	30:1	40:1	40:1	50:1
STROKE (mm)	SIZE 15 mm	16	16	15	16	–	–
	SIZE 25 mm	16	16	14	15	20	25

50 mm - 100 mm STANDARD Cv VALUE TYPE

EQUAL-PERCENTAGE CHARACTERISTICS

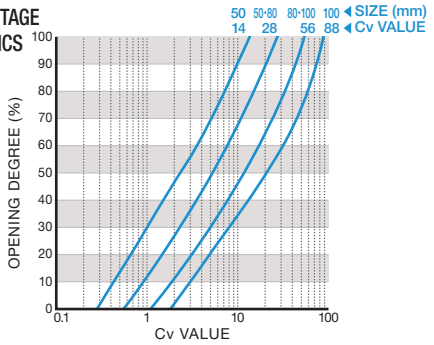

SIZE (mm)		50		80		100	
KIND OF PORT		S	L	S	L	S	L
Cv VALUE		14	28	28	56	56	88
RANGEABILITY		50:1	50:1	50:1	50:1	50:1	50:1
STROKE (mm)		26	28	30	28	32	28

15 mm SMALL Cv VALUE TYPE

EQUAL-PERCENTAGE CHARACTERISTICS

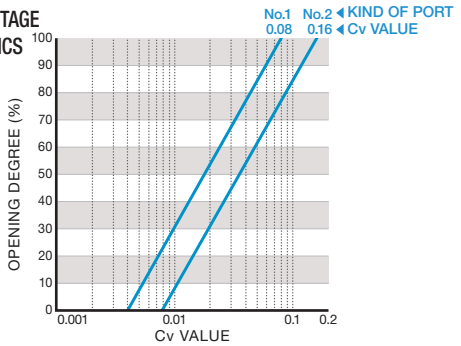

SIZE (mm)		15	
KIND OF PORT		No.1	No.2
Cv VALUE		0.08	0.16
RANGEABILITY		20:1	20:1
STROKE (mm)		16	16

LINEAR CHARACTERISTICS

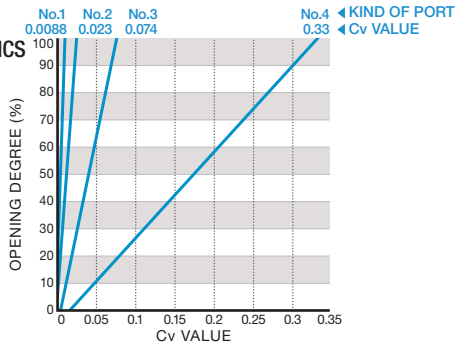

SIZE (mm)		15			
KIND OF PORT		No.1	No.2	No.3	No.4
Cv VALUE		0.0088	0.023	0.074	0.33
RANGEABILITY		15:1	15:1	15:1	15:1
STROKE (mm)		16	16	16	16

AUTOMATIC PNEUMATIC TYPE AV DOUBLE ACTING AIR TO OPEN AIR TO CLOSE

CONTROL VALVE

TYPE——ACVV
CONNECTION / FLANGED——JIS, DIN, ANSI

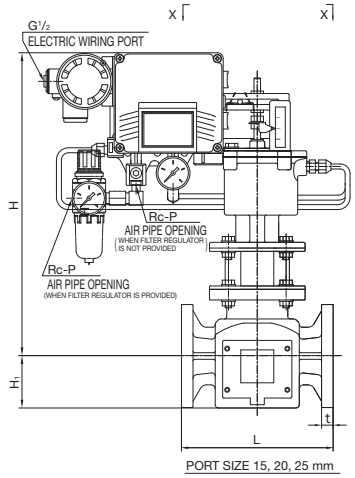

PORT SIZE 15, 20, 25 mm

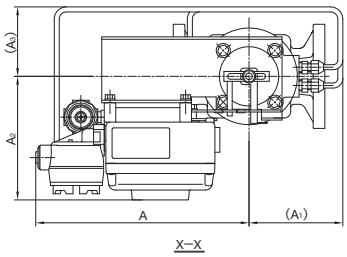

ACTUATOR SELECTION CHART

SIZE	ACTUATOR TYPE	
	U-PVC BODY	PVDF BODY
15mm (1/2inch)	AVU-1DA	AVF-1DA
25mm (1inch)	AVU-2DA	AVF-2DA

For detailed specifications, see P.119

■ JIS, DIN (Unit: mm)

mm	H		H1		A	A1		A2	A3	P	JIS10K, DIN PN10 L	t
	U-PVC	PVDF	U-PVC	PVDF		U-PVC	PVDF					
15	337	325	51	49.5	259	130	110	150	70	1/4	160	12
25	368	354	63	66.5	259	130	110	150	70	1/4	164	14

■ ANSI (UNIT: inch)

inch	mm	H	H1	A	A1	A2	A3	P	ANSI CLASS150 L	t
		U-PVC	U-PVC		U-PVC					
1/2	15	13.27	2.01	10.20	5.12	5.91	2.76	1/4	6.30	0.47
1	25	14.49	2.48	10.20	5.12	5.91	2.76	1/4	6.46	0.55

AUTOMATIC PNEUMATIC TYPE AV DOUBLE ACTING AIR TO OPEN AIR TO CLOSE

CONTROL VALVE

TYPE——ACVV
CONNECTION / FLANGED——JIS, DIN, ANSI

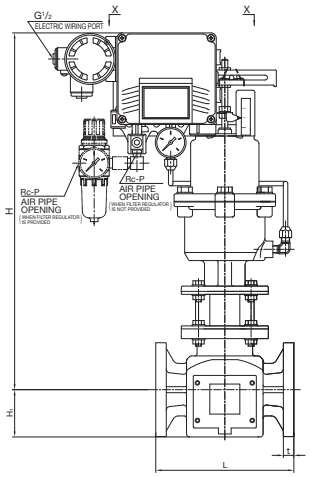

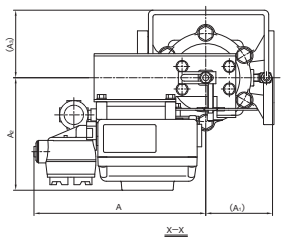

ACTUATOR SELECTION CHART

SIZE	ACTUATOR TYPE	
	U-PVC BODY	PVDF BODY
15mm (1/2inch)	AVU-1AO	AVF-1AO
25mm (1inch)	AVU-2AO	AVF-2AO

For detailed specifications, see P.119

■ JIS, DIN (Unit: mm)

mm	H		H1		A	A1		A2	A3	P	JIS10K, DIN L	t
	U-PVC	PVDF	U-PVC	PVDF		U-PVC	PVDF					
15	438	423	51	49.5	229	89	86	150	90	1/4	160	12
25	475	458	63	66.5	229	89	86	150	90	1/4	184	14

■ ANSI (UNIT: inch)

inch	mm	H	H1	A	A1	A2	A3	P	ANSI CLASS150 L	t
		U-PVC	U-PVC		U-PVC					
1/2	15	17.24	2.01	9.02	3.50	5.91	3.54	1/4	6.30	0.47
1	25	18.70	2.48	9.02	3.50	5.91	3.54	1/4	7.24	0.55

AUTOMATIC | PNEUMATIC | TYPE AV | DOUBLE ACTING | AIR TO OPEN | AIR TO CLOSE

CONTROL VALVE

TYPE——ACVV
CONNECTION / FLANGED——JIS, ANSI

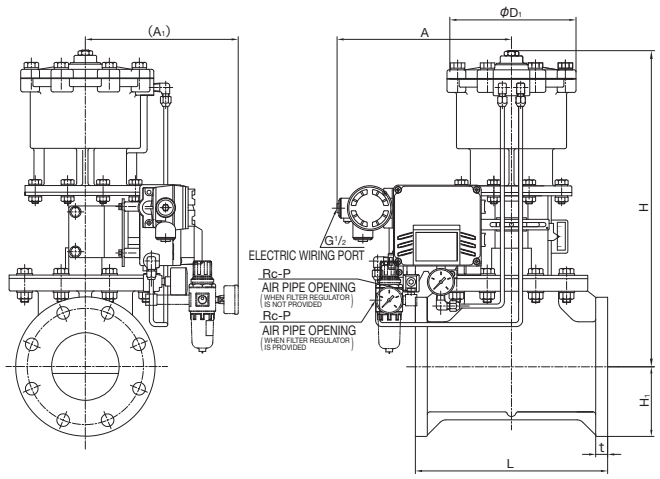

ACTUATOR SELECTION CHART

SIZE	ACTUATOR TYPE
	U-PVC BODY
50mm (2inch)	AVU-3DA
80mm (3inch)	AVU-4DA
100mm (4inch)	AVU-5DA

For detailed specifications, see P.119

■ JIS (Unit: mm)

mm	D1	H	H1	A	A1	P	JIS10K L	JIS10K t
50	147	381	77.5	256	229	1/4	200	16
80	147	420	92	261	230	1/4	240	18
100	208	477	105	266	230	1/4	290	18

■ ANSI (UNIT: inch)

inch	mm	D1	H	H1	A	A1	P	ANSI CLASS150 L	ANSI CLASS150 t
2	50	5.79	15.00	3.05	10.08	9.02	1/4	7.87	0.63

AUTOMATIC | PNEUMATIC | TYPE AV | DOUBLE ACTING | AIR TO OPEN | AIR TO CLOSE

CONTROL VALVE

TYPE——ACVV
CONNECTION / FLANGED——JIS, ANSI

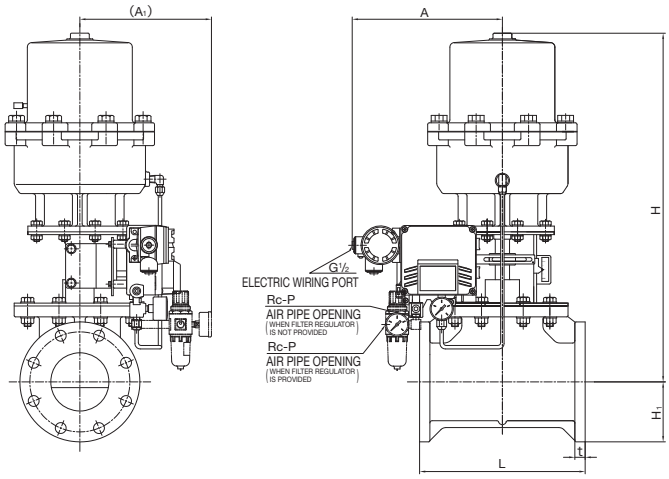

ACTUATOR SELECTION CHART

SIZE	ACTUATOR TYPE
	U-PVC BODY
50mm (2inch)	AVU-3AO
80mm (3inch)	AVU-4AO
100mm (4inch)	AVU-5AO

For detailed specifications, see P.119

■ JIS (Unit: mm)

mm	H	H1	A	A1	P	JIS10K L	JIS10K t
50	469	77.5	256	229	1/4	200	16
80	562	92	261	230	1/4	240	18
100	611	105	266	230	1/4	290	18

■ ANSI (UNIT: inch)

inch	mm	H	H1	A	A1	P	ANSI CLASS150 L	ANSI CLASS150 t
2	50	18.46	3.05	10.08	9.02	1/4	7.87	0.63

AUTOMATIC ELECTRIC TYPE M Single-Phase 100V • Single-Phase 200V • DC24V

CONTROL VALVE

TYPE——ACVM
CONNECTION / FLANGED——JIS, ANSI

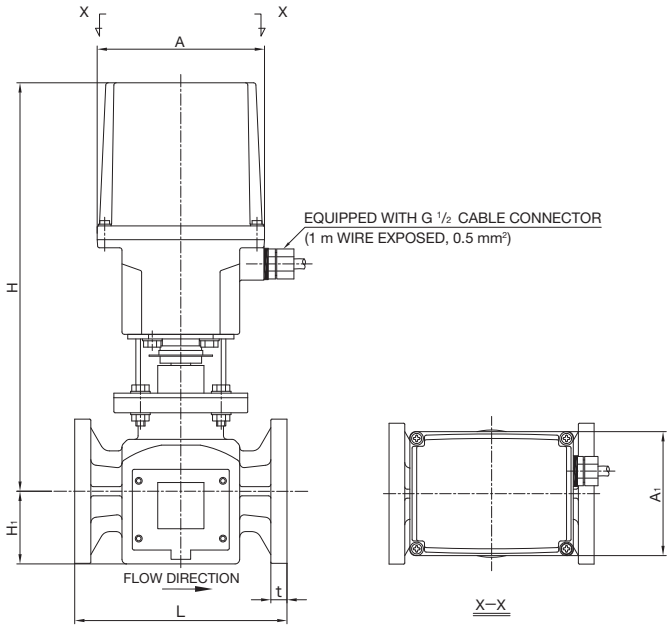

ACTUATOR SELECTION CHART

SIZE	ACTUATOR TYPE
15mm (1/2inch)	MSP6-□4
25mm (1inch)	MSP6-□6

For detailed specifications, see P.129

■ JIS (Unit: mm)

mm	H		H1		A	A1	JIS10K,DINPN10 L	t
	U-PVC	PVDF	U-PVC	PVDF				
15	335	372.5	51	49.5	145	110	160	12
25	354	366	63	66.5	145	110	184	14

■ ANSI (UNIT: inch)

inch	mm	H	H1	A	A1	ANSI CLASS150 L	t
		U-PVC	U-PVC				
1/2	15	13.19	2.01	5.71	4.33	6.30	0.47
1	25	13.94	2.48	5.71	4.33	7.24	0.55

AUTOMATIC ELECTRIC TYPE M Single-Phase 100V • Single-Phase 200V • DC24V

CONTROL VALVE

TYPE——ACVM
CONNECTION / FLANGED——JIS, ANSI

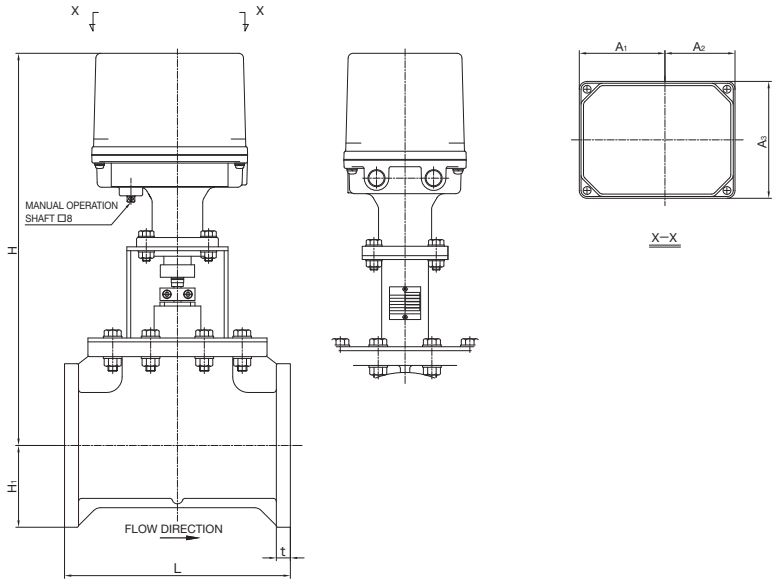

ACTUATOR SELECTION CHART

SIZE	ACTUATOR TYPE
50mm (2inch)	PSN1
80mm (3inch)	
100mm (4inch)	PSN3

For detailed specifications, see P.129

■ JIS (Unit: mm)

						JIS10K	
mm	H	H1	A1	A2	A3	L	t
50	433.5	77.5	101	81	140	200	16
80	450.5	92	101	81	140	240	18
100	503.5	105	110	90	160	290	18

■ ANSI (UNIT: inch)

							ANSI CLASS150	
inch	mm	H	H1	A1	A2	A3	L	t
2	50	17.07	3.05	3.98	3.19	5.51	7.87	0.63

PNEUMATIC TYPE AN

APPLICABLE TYPE

DIAPHRAGM VALVE

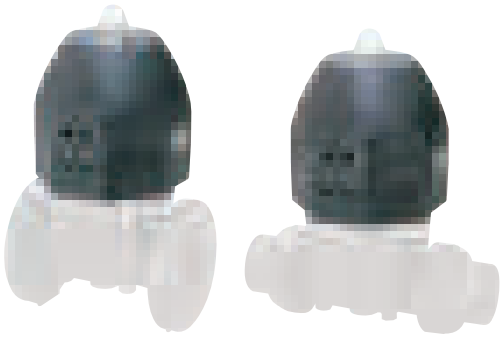

- LIGHTWEIGHT AND COMPACT SIZE DUE TO PLASTIC ACTUATOR
- AIR PIPING IS COMPATIBLE WITH NAMUR STANDARD.
- OPTIONS ARE EASILY REMOVABLE/REPLACEABLE AND CAN BE MOUNTED LATER (EXCEPT POSITIONER).
- EQUIPPED WITH STOPPER THAT CAN BE ADJUSTED AT FULL CLOSED POSITION.

BASIC SPECIFICATIONS

DOUBLE ACTING	ACTUATOR TYPE				UNIT
	AN-1DA	AN-2DA	AN-3DA	AN-4DA	
OPERATING PRESSURE	0.4-0.6				MPa
AIR CONSUMPTION	2.6	2.7	9.6	9.8	Nl/OPEN & CLOSE (0.4 MPa)
AIR SUPPLY BORE	Rc1/4				

AIR TO OPEN	ACTUATOR TYPE				UNIT
	AN-1AO	AN-2AO	AN-3AO	AN-4AO	
OPERATING PRESSURE	0.4-0.6				MPa
AIR CONSUMPTION	0.8		3.4		Nl/OPEN & CLOSE (0.4 MPa)
AIR SUPPLY BORE	Rc1/4				

AIR TO CLOSE	ACTUATOR TYPE				UNIT
	AN-1AS	AN-2AS	AN-3AS	AN-4AS	
OPERATING PRESSURE	0.4-0.6				MPa
AIR CONSUMPTION	1.8	1.9	6.1	6.3	Nl/OPEN & CLOSE (0.4 MPa)
AIR SUPPLY BORE	Rc1/4				

OPTION COMBINATION

COMBINATION NO.	1 *4	2 *4	3	4 *4	5	6	7	8	9
SOLENOID VALVE *1	○	—	—	○	○	—	○	—	—
FILTER REGULATOR	—	—	—	○	—	—	○	—	○
SPEED CONTROLLER *2	◎	○	—	◎	◎	○	◎	—	—
LIMIT SWITCH *3	—	—	○	—	○	○	○	—	—
POSITIONER (E/P, P/P)	—	—	—	—	—	—	—	○	○

*1 Equipped with a built-in speed controller and bypass valve.
*2 ◎ indicates solenoid valve-dedicated type.
*3 When using the limit switch at 1 to 100 mA or 5 to 30V, contact our sales office in your area.
*4 The "full opening adjustment" and "manual override (air to open only)" are available only for the combination No. 1, 2 and 4.

OPTION LIST

	MANUFACTURER	BASIC SPECIFICATIONS
SOLENOID VALVE NAMUR	KONAN	• WATER PROOF, EXPLOSION PROOF • POWER SOURCE AC100V, AC110V, AC200V, AC220V, DC24V
FILTER REGULATOR	KONAN	
SPEED CONTROLLER	KONAN	* Since a solenoid valve has a built-in exhaust valve, when a solenoid valve is mounted, no speed controller is necessary.
BYPASS VALVE (SPEED CONTROLLER)	KONAN	
LIMIT SWITCH	AZBIL (formerly YAMATAKE)	• WATER PROOF, EXPLOSION PROOF • OPEN: 1 pc, CLOSE: 1 pc, OPEN/CLOSE: 2 pcs
POSITIONER	YTC	• E/P: INPUT SIGNAL CURRENT DC 4-20 mA • P/P: INPUT SIGNAL AIR PRESSURE 0.02 - 0.1 MPa
MANUAL OVERRIDE	ASAHI YUKIZAI	
FULL OPENING ADJUSTMENT	ASAHI YUKIZAI	

PNEUMATIC TYPE AV (MODEL: AV)

APPLICABLE TYPE

DIAPHRAGM VALVE



- EQUIPPED WITH STOPPER THAT CAN BE ADJUSTED AT FULL CLOSED POSITION.
- AIR PIPING IS COMPATIBLE WITH NAMUR STANDARD.

BASIC SPECIFICATIONS

DOUBLE ACTING	ACTUATOR TYPE							UNIT
	AV-1DA	AV-2DA	AV-3DA	AV-4DA	AV-5DA	AV-6DA	AV-7DA	
OPERATING PRESSURE	0.4-0.6							MPa
AIR CONSUMPTION	10.3	11.9	20.7	36.6	67.3	87.3	214	Nl/OPEN & CLOSE (0.4 MPa)
AIR SUPPLY BORE	Rc1/4					Rc3/8		

AIR TO OPEN	ACTUATOR TYPE					UNIT
	AV-1AO	AV-2AO	AV-3AO	AV-4AO	AV-5AO	
OPERATING PRESSURE	0.4-0.6					MPa
AIR CONSUMPTION	10.6	15.9	34.3	55.6	84.2	Nl/OPEN & CLOSE (0.4 MPa)
AIR SUPPLY BORE	Rc1/4					

AIR TO CLOSE	ACTUATOR TYPE					UNIT
	AV-1AS	AV-2AS	AV-3AS	AV-4AS	AV-5AS	
OPERATING PRESSURE	0.4-0.6					MPa
AIR CONSUMPTION	9.4	11.7	26.5	38.4	60.5	Nl/OPEN & CLOSE (0.4 MPa)
AIR SUPPLY BORE	Rc1/4					

OPTION COMBINATION

DIAPHRAGM VALVE TYPE 14 (65 mm - 100 mm)

COMBINATION NO.	1	2	3	4	5	6	7	8	9
SOLENOID VALVE *1	○	—	—	○	○	—	○	—	—
FILTER REGULATOR	—	—	—	○	—	—	○	—	○
SPEED CONTROLLER	○	○	—	○	○	○	○	—	—
LIMIT SWITCH *2	—	—	○	—	○	○	○	—	—
POSITIONER (E/P, P/P)	—	—	—	—	—	—	—	○	○

DIAPHRAGM VALVE TYPE 15 / 72

COMBINATION NO.	1	2	3	4	5	6	7	8	9	10	11	12	13
SOLENOID VALVE *1	○	—	—	○	○	○	—	○	○	○	○	—	—
FILTER REGULATOR	—	—	—	○	—	—	—	○	○	—	○	—	○
SPEED CONTROLLER	—	○	—	—	○	—	○	○	—	○	○	—	—
LIMIT SWITCH *2	—	—	○	—	—	○	○	—	○	○	○	—	—
POSITIONER (E/P, P/P)	—	—	—	—	—	—	—	—	—	—	—	○	○

*1 Equipped with a built-in speed controller and bypass valve.
*2 When using the limit switch at 1 to 100 mA or 5 to 30V, contact our sales office in your area.

OPTION LIST

	MANUFACTURER	BASIC SPECIFICATIONS
SOLENOID VALVE NAMUR	KONAN	• WATER PROOF, EXPLOSION PROOF • POWER SOURCE AC100V, AC110V, AC200V, AC220V, DC24V * 40-150 mm is compatible with NAMUR standard.
FILTER REGULATOR	KONAN	
SPEED CONTROLLER	KONAN	* Since a solenoid valve has a built-in exhaust valve, when a solenoid valve is mounted, no speed controller is necessary.
BYPASS VALVE (SPEED CONTROLLER)	KONAN	
LIMIT SWITCH	AZBIL (formerly YAMATAKE)	• WATER PROOF, EXPLOSION PROOF • OPEN: 1 pc, CLOSE: 1 pc, OPEN/CLOSE: 2 pcs
POSITIONER	YTC	• E/P: INPUT SIGNAL CURRENT DC 4-20 mA • P/P: INPUT SIGNAL AIR PRESSURE 0.02 - 0.1 MPa
MANUAL OVERRIDE	ASAHI YUKIZAI	
FULL OPENING ADJUSTMENT	ASAHI YUKIZAI	
SPECIAL PAINTING (ACTUATOR ONLY)	ASAHI YUKIZAI	• POLYURETHANE PAINT

PNEUMATIC **TYPE AV** (MODEL: AVU, AVF)

APPLICABLE TYPE: CONTROL VALVE



- OUR ORIGINAL SPECIAL PLUG SHAPE REDUCES EFFECTS OF FLUID VISCOSITY AND ALLOWS FOR HIGHLY ACCURATE FLOW CONTROL.

BASIC SPECIFICATIONS

DOUBLE ACTING		ACTUATOR TYPE					UNIT
	U-PVC BODY	AVU-1DA	AVU-2DA	AVU-3DA	AVU-4DA	AVU-5DA	
	PVDF BODY	AVF-1DA	AVF-2DA	—	—	—	
OPERATING PRESSURE		0.4-0.7					MPa
AIR CONSUMPTION		0.6	0.7	2.1		6.3	Nl/OPEN & CLOSE (0.4 MPa)
AIR SUPPLY BORE		Rc1/4					

AIR TO OPEN		ACTUATOR TYPE					UNIT
	U-PVC BODY	AVU-1AO	AVU-2AO	AVU-3AO	AVU-4AO	AVU-5AO	
	PVDF BODY	AVF-1AO	AVF-2AO	—	—	—	
OPERATING PRESSURE		0.4-0.7					MPa
AIR CONSUMPTION		1.3	1.5	2.7	5.5	7.9	Nl/OPEN & CLOSE (0.4 MPa)
AIR SUPPLY BORE		Rc1/4					

OPTION COMBINATION

COMBINATION NO.	1	2
POSITIONER (E/P)	●	—
POSITIONER (P/P)	—	●
FILTER REGULATOR	○	○

● indicates that the feature is provided as standard.

OPTION LIST

	MANUFACTURER	BASIC SPECIFICATIONS
FILTER REGULATOR	KONAN	
POSITIONER	YTC	• E/P: INPUT SIGNAL CURRENT DC 4-20 mA • P/P: INPUT SIGNAL AIR PRESSURE 0.02 - 0.1 MPa
SPECIAL PAINTING (ACTUATOR ONLY)	ASAHI YUKIZAI	• POLYURETHANE PAINT

PNEUMATIC TYPE AI

APPLICABLE TYPE

DIAPHRAGM VALVE



- HAS SUFFICIENT DURABILITY TO WITHSTAND 500,000 CYCLES OF OPENING/CLOSING.
- CAN BE USED IN LIMITED PIPING SPACE.
- ALL-PLASTIC BODY ENSURES EXCELLENT CORROSION RESISTANCE.

BASIC SPECIFICATIONS

DOUBLE ACTING	ACTUATOR TYPE AI-1DA	AI-2DA	AI-3DA	AI-4DA	AI-5DA	UNIT
OPERATING PRESSURE	0.4-0.6					MPa
AIR CONSUMPTION	0.89		1.29	4.35	4.80	NI/OPEN & CLOSE (0.4 MPa)
AIR SUPPLY BORE	Rc1/4					

AIR TO OPEN (0.7Mpa Spec)	ACTUATOR TYPE AI-1AO	AI-2AO	AI-3AO	AI-4AO	AI-5AO	UNIT
OPERATING PRESSURE	0.4-0.6					MPa
AIR CONSUMPTION	0.35		0.49	1.73	1.98	NI/OPEN & CLOSE (0.4 MPa)
AIR SUPPLY BORE	Rc1/4					

AIR TO OPEN (1.0Mpa Spec)	ACTUATOR TYPE AI-1AO-P/E*	AI-2AO-P/E*	AI-3AO-P/E*	AI-4AO-P/E*	AI-5AO-P/E*	UNIT
OPERATING PRESSURE	0.5-0.6					MPa
AIR CONSUMPTION	0.42		0.59	2.08	2.37	NI/OPEN & CLOSE (0.5 MPa)
AIR SUPPLY BORE	Rc1/4					

* P:PTFE DIAPHRAGM E:EPDM DIAPHRAGM

AIR TO CLOSE	ACTUATOR TYPE AI-1AS	AI-2AS	AI-3AS	AI-4AS	AI-5AS	UNIT
OPERATING PRESSURE	0.4-0.6					MPa
AIR CONSUMPTION	0.54		0.79	2.63	2.82	NI/OPEN & CLOSE (0.4 MPa)
AIR SUPPLY BORE	Rc1/4					

OPTION COMBINATION

COMBINATION NO.	1	2	3	4	5	6	7	8	9
SOLENOID VALVE	○	—	—	○	○	—	○	—	—
FILTER REGULATOR	—	—	—	○	—	—	○	—	○
SPEED CONTROLLER *1	◎	○	—	◎	◎	○	◎	—	—
LIMIT SWITCH *2	—	—	○	—	○	○	○	—	—
POSITIONER (E/P, P/P)	—	—	—	—	—	—	—	○	○

*1 ◎ indicates solenoid valve-dedicated type.
*2 When using the limit switch at 1 to 100 mA or 5 to 30V, contact our sales office in your area.

OPTION LIST

	MANUFACTURER	BASIC SPECIFICATIONS
SOLENOID VALVE NAMUR	KONAN	• WATER PROOF, EXPLOSION PROOF • POWER SOURCE AC100V, AC110V, AC200V, AC220V, DC24V
FILTER REGULATOR	KONAN	
SPEED CONTROLLER	KONAN	* Since a solenoid valve has a built-in exhaust valve, when a solenoid valve is mounted, no speed controller is necessary.
BYPASS VALVE (SPEED CONTROLLER)	KONAN	
LIMIT SWITCH BOX	Rotech	• WATER PROOF
LIMIT SWITCH	AZBIL (formerly YAMATAKE)	• WATER PROOF, EXPLOSION PROOF • OPEN: 1 pc, CLOSE: 1 pc, OPEN/CLOSE: 2 pcs
POSITIONER	YTC	• E/P: INPUT SIGNAL CURRENT DC 4-20 mA • P/P: INPUT SIGNAL AIR PRESSURE 0.02 - 0.1 MPa
MANUAL OVERRIDE	ASAHI YUKIZAI	
FULL OPENING ADJUSTMENT	ASAHI YUKIZAI	

PNEUMATIC TYPE AD

APPLICABLE TYPE

DIAPHRAGM VALVE

- COMPACT BODY ALLOWS FOR USE IN LIMITED PIPING SPACE.
- EXCELLENT OPEN/CLOSE DURABILITY TO WITHSTAND MORE THAN 1,000,000 CYCLES OF OPENING AND CLOSING
- ALL-PLASTIC BODY ENSURES EXCELLENT CORROSION RESISTANCE.



BASIC SPECIFICATIONS

DOUBLE ACTING	SIZE					UNIT
	15mm(1/2inch)	20mm(3/4inch)	25mm(1inch)	40mm(1 1/2inch)	50mm(2inch)	
OPERATING PRESSURE	0.3-0.4					MPa
AIR CONSUMPTION	0.14	0.32		1.24	2.19	Nl/OPEN & CLOSE (0.4 MPa)
AIR SUPPLY BORE	Rc1/8					

AIR TO OPEN	SIZE					UNIT
	15mm(1/2inch)	20mm(3/4inch)	25mm(1inch)	40mm(1 1/2inch)	50mm(2inch)	
OPERATING PRESSURE	0.4-0.5					MPa
AIR CONSUMPTION	0.12	0.26		1.02	1.78	Nl/OPEN & CLOSE (0.4 MPa)
AIR SUPPLY BORE	Rc1/8					

OPTION COMBINATION

COMBINATION NO.	1	2	3	4	5*	6*
SPEED CONTROLLER	—	○	—	○	—	○
FULL OPENING ADJUSTMENT	—	—	○	○	○	○
INDICATOR	●	●	—	—	◎	◎

● indicates that the feature is provided as standard.
◎ represents an indicator for full opening adjustment.
* Only applicable to the sizes of 15 to 25 mm.

OPTION LIST

	MANUFACTURER	BASIC SPECIFICATIONS
SPEED CONTROLLER	KONAN	—
WITH FULL OPENING ADJUSTMENT	ASAHI YUKIZAI	—
FULL OPENING ADJUSTMENT (WITH INDICATOR)	ASAHI YUKIZAI	—

PNEUMATIC TYPE AP

APPLICABLE TYPE

DIAPHRAGM VALVE



- LIGHTWEIGHT AND COMPACT SIZE DUE TO PLASTIC ACTUATOR
- AIR PIPING IS COMPATIBLE WITH NAMUR STANDARD.
- ALL-PLASTIC BODY ENSURES EXCELLENT CORROSION RESISTANCE.

BASIC SPECIFICATION

		ACTUATOR TYPE AP-1	AP-2	AP-3	UNIT
		VALVE SIZE (mm) 65	80	100	
OPERATING PRESSURE	DOUBLE ACTING, AIR TO OPEN, AIR TO CLOSE	0.4-0.5			MPa
AIR CONSUMPTION	DOUBLE ACTING	22.1	23.7	30.4	N ℓ /OPEN& CLOSE (0.4MPa)
	AIR TO OPEN (0.6MPa)	7.4	7.7	10.6	
	AIR TO OPEN (1.0MPa)	7.4	9.3	15.1	
	AIR TO CLOSE	7.0	8.3	17.2	
AIR SUPPLY BORE	DOUBLE ACTING, AIR TO OPEN, AIR TO CLOSE	Rc 1/4			
ENVIRONMENT TEMPERATURE	DOUBLE ACTING, AIR TO OPEN, AIR TO CLOSE	–10-50			°C

ACTUATOR SELECTION CHART

SIZE	ACTUATOR DOUBLE ACTING	AIR TO OPEN 0.6MPa	AIR TO OPEN 1.0MPa	AIR TO CLOSE
65mm (2 1/2inch)	AP-1DA	AP-1AO-06	AP-1AO-10	AP-1AS
80mm (3inch)	AP-2DA	AP-2AO-06	–	AP-2AS
	–	–	AP-2AO-10	–
100mm (4inch)	AP-3DA	AP-3AO-06	–	–
	–	–	AP-3AO-10	AP-3AS

OPTION COMBINATION

COMBINATION NO.	1	2	3	4	5	6	7	8	9	10	11	12
SOLENOID VALVE	○				○	○		○				
FILTER REGULATOR					○			○				
SPEED CONTROLLER	◎	○		◎	◎	◎	○	◎		○		
LIMIT SWITCH BOX			○			○	○	○				
LIMIT SWITCH			○			○	○	○				
BYPASS VALVE (SPEED CONTROLLER)	◎			○	◎	◎		◎				
POSITIONER (E/P, P/P)									○	○		
MANUAL OVERRIDE											○	
FULL OPENING ADJUSTMENT												○
METAL INSERT PROVIDED (WITH ENSAT)	(W) STANDARD											

* ◎ equipped with ○

OPTION LIST

	MANUFACTURER	BASIC SPECIFICATIONS
SOLENOID VALVE NAMUR	KONAN	• WATER PROOF, EXPLOSION PROOF • POWER SOURCE AC100V, AC110V, AC200V, AC220V, DC24V
FILTER REGULATOR	KONAN	—
SPEED CONTROLLER	KONAN	* Since a solenoid valve has a built-in exhaust valve, when a solenoid valve is mounted, no speed controller is necessary.
LIMIT SWITCH BOX	Rotech	• WATER PROOF
LIMIT SWITCH	AZBIL (formerly YAMATAKE)	• WATER PROOF, EXPLOSION PROOF • OPEN: 1 pc, CLOSE: 1 pc, OPEN/CLOSE: 2 pcs
POSITIONER	YTC	• E/P: INPUT SIGNAL CURRENT DC4-20mA • P/P: INPUT SIGNAL AIR PRESSURE 0.02-0.1MPa
MANUAL OVERRIDE	ASAHI YUKIZAI	—
FULL OPENING ADJUSTMENT	ASAHI YUKIZAI	—

PNEUMATIC TYPE AA

APPLICABLE TYPE

BALL VALVE



- LIGHTWEIGHT AND COMPACT SIZE DUE TO PLASTIC ACTUATOR
- AIR PIPING IS COMPATIBLE WITH NAMUR STANDARD.
- PPG (BLACK), HIGHLY WEATHER RESISTANT PLASTIC, IS USED FOR THE MOUNTING BASE.

BASIC SPECIFICATIONS

DOUBLE ACTING	ACTUATOR TYPE PPW	ACTUATOR TYPE PP00	UNIT
ANGLE ADJUSTMENT	No angle adjustment is available.		
OPERATING PRESSURE	0.4-0.6		MPa
AIR CONSUMPTION	0.6	1.3	Nl/OPEN & CLOSE (0.4 MPa)
AIR SUPPLY BORE	Rc1/4		

AIR TO OPEN • AIR TO CLOSE	ACTUATOR TYPE PP00S	ACTUATOR TYPE PP10S	UNIT
ANGLE ADJUSTMENT	No angle adjustment is available.		
OPERATING PRESSURE	0.4-0.6		MPa
AIR CONSUMPTION	0.7	1.7	Nl/OPEN & CLOSE (0.4 MPa)
AIR SUPPLY BORE	Rc1/4		

OPTION COMBINATION

COMBINATION NO.	1	2	3	4	5	6	7
SOLENOID VALVE *1	○	—	—	○	○	—	○
FILTER REGULATOR	—	—	—	○	—	—	○
SPEED CONTROLLER *2	◎	○	—	◎	◎	○	◎
LIMIT SWITCH *3	—	—	○	—	○	○	○

*1 Equipped with a built-in speed controller and bypass valve.
*2 ◎ indicates solenoid valve-dedicated type.
*3 When using the limit switch at 1 to 100 mA or 5 to 30V, contact our sales office in your area.

OPTION LIST

	MANUFACTURER	BASIC SPECIFICATIONS
SOLENOID VALVE NAMUR	KONAN	• WATER PROOF, EXPLOSION PROOF • POWER SOURCE AC100V, AC110V, AC200V, AC220V, DC24V
FILTER REGULATOR	KONAN	
SPEED CONTROLLER	KONAN	* Since a solenoid valve has a built-in exhaust valve, when a solenoid valve is mounted, no speed controller is necessary.
BYPASS VALVE (SPEED CONTROLLER)	KONAN	
LIMIT SWITCH BOX	PRISMA	• WATER PROOF
LIMIT SWITCH	AZBIL (formerly YAMATAKE)	• WATER PROOF, EXPLOSION PROOF • OPEN: 1 pc, CLOSE: 1 pc, OPEN/CLOSE: 2 pcs
SPECIAL FITTING	ASAHI YUKIZAI	• SUS304, U-PVC

PNEUMATIC TYPE TA, TYPE TW

APPLICABLE TYPE

BALL VALVE | BUTTERFLY VALVE | ROTARY DAMPER

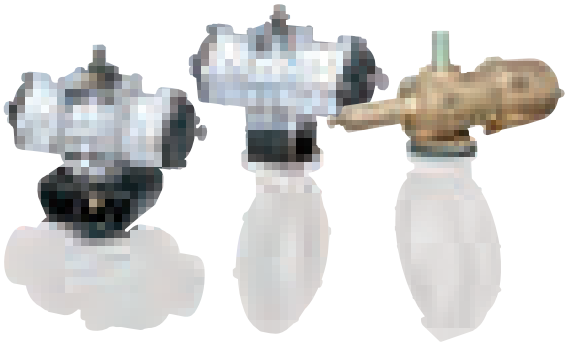

- HORIZONTAL ACTUATOR CAN REDUCE PIPING SPACE.
- OPTIONS ARE EASILY REMOVABLE/REPLACEABLE AND CAN BE MOUNTED LATER (EXCEPT POSITIONER).
- AIR PIPING IS COMPATIBLE WITH NAMUR STANDARD.

BASIC SPECIFICATIONS

DOUBLE ACTING	ACTUATOR TYPE									UNIT
	TA2A-0402D	TA2A-050D	TA2A-063D	TA2A-080D	TA2A-100D	TA2A-125D	TA2A-160D	TA-200D	TW-250D	
ANGLE ADJUSTMENT	No angle adjustment is available.	±5°								
OPERATING PRESSURE	0.4-0.7									MPa
AIR CONSUMPTION	0.5	0.9	1.7	3.2	6.6	13.3	27.1	56.8	99	NI/OPEN & CLOSE (0.4 MPa)
AIR SUPPLY BORE	Rc1/8	Rc1/4						Rc3/8		

AIR TO OPEN AIR TO CLOSE	ACTUATOR TYPE								UNIT
	TA2A-0402R	TA2A-050R	TA2A-063R	TA2A-080R	TA2A-100R2	TA2A-125R2	TA2A-160R2	TA-200R	
ANGLE ADJUST-MENT	No angle adjustment is available.	±5°							
OPERATING PRESSURE	0.4-0.7								MPa
AIR CONSUMPTION	0.8	1.7	3.3	6.1	12.8	21.6	42.7	68.4	NI/OPEN & CLOSE (0.4 MPa)
AIR SUPPLY BORE	Rc1/4	Rc1/4						Rc3/8	

OPTION COMBINATION

COMBINATION NO.	1	2	3	4	5	6	7	8	9
SOLENOID VALVE *1	○	—	—	○	○	—	○	—	—
FILTER REGULATOR	—	—	—	○	—	—	○	—	○
SPEED CONTROLLER *2	◎	○	—	◎	◎	○	◎	—	—
LIMIT SWITCH *3	—	—	○	—	○	○	○	—	—
POSITIONER (E/P, P/P)	—	—	—	—	—	—	—	○	○

*1 Equipped with a built-in speed controller and bypass valve.
*2 ◎ indicates solenoid valve-dedicated type.
*3 When using the limit switch at 1 to 100 mA or 5 to 30V, contact our sales office in your area.

OPTION LIST

	MANUFACTURER	BASIC SPECIFICATIONS
SOLENOID VALVE NAMUR	KONAN	• WATER PROOF, EXPLOSION PROOF • POWER SOURCE AC100V, AC110V, AC200V, AC220V, DC24V
FILTER REGULATOR	KONAN	
SPEED CONTROLLER	KONAN	* Since a solenoid valve has a built-in exhaust valve, when a solenoid valve is mounted, no speed controller is necessary.
BYPASS VALVE (SPEED CONTROLLER)	KONAN	
LIMIT SWITCH BOX	KONAN	• WATER PROOF
LIMIT SWITCH	AZBIL (formerly YAMATAKE)	• WATER PROOF - EXPLOSION PROOF - OPEN: 1 pc, CLOSE: 1 pc, OPEN/CLOSE: 2 pcs
PROXIMITY SWITCH	AZBIL (formerly YAMATAKE)	• OPEN: 1 pc, CLOSE: 1 pc, OPEN/CLOSE: 2 pcs
POSITIONER	YTC	• E/P: INPUT SIGNAL CURRENT DC 4-20 mA • P/P: INPUT SIGNAL AIR PRESSURE 0.02 - 0.1 MPa
MANUAL OPERATION LEVER	ASAHI YUKIZAI	
MANUAL OVERRIDE	KONAN	
FULL OPENING ADJUSTMENT (OPENING DEGREE ADJUSTING BOLT)	ASAHI YUKIZAI	
SPECIAL PAINTING (ACTUATOR ONLY)	KONAN	• EPOXY PAINT, POLYURETHANE PAINT
SPECIAL FITTING	ASAHI YUKIZAI	• SUS304

PNEUMATIC TYPE VC

APPLICABLE TYPE

BALL VALVE



- LIGHTWEIGHT, COMPACT SIZE AND HIGH CORROSION RESISTANCE DUE TO PLASTIC ACTUATOR
- THE PRODUCT LINE ALLOWS FOR SELECTION ACCORDING TO THE FLUID TO BE USED. BALL VALVE TYPE 21 FOR CHEMICAL SOLUTION LINES AND WATER BALL VALVE FOR WATER/SEA WATER LINES CAN BE SELECTIVELY USED, WHICH ALSO CONTRIBUTES TO TOTAL COST REDUCTION.

BASIC SPECIFICATIONS

DOUBLE ACTING	ACTUATOR TYPE			UNIT
	PND-03S	PND-03D	PND-04D	
OPERATING PRESSURE		0.4-0.7		MPa
AIR CONSUMPTION	0.05	0.08	0.19	NI/OPEN & CLOSE (0.4 MPa)
AIR SUPPLY BORE		Rc1/8		

AIR TO OPEN AIR TO CLOSE	ACTUATOR TYPE			UNIT
	PSO-03D	PSO-04D	PSO-04W	
OPERATING PRESSURE		0.4-0.7		MPa
AIR CONSUMPTION	0.04	0.10	0.17	NI/OPEN & CLOSE (0.4 MPa)
AIR SUPPLY BORE		Rc1/8		

OPTION COMBINATION

COMBINATION NO.	1	2	3	4	5
SOLENOID VALVE *1	○	—	—	○	—
SPEED CONTROLLER *2	◎	○	—	◎	○
LIMIT SWITCH *3	—	—	○	○	○

*1 Dedicated type for NVC model by SMC (with solenoid valve + silencer-equipped exhaust throttle valve dust-proof DIN connector)
*2 ◎ indicates solenoid valve-dedicated type.
*3 LS box by NVC (dedicated type)

OPTION LIST

	MANUFACTURER	BASIC SPECIFICATIONS
SOLENOID VALVE (EXHAUST THROTTLE VALVE WITH SILENCER)	SMC	• WATER PROOF • POWER SOURCE AC100V, AC110V, AC200V, AC220V, DC24V
SPEED CONTROLLER	SMC	* Since a solenoid valve has a built-in exhaust valve, when a solenoid valve is mounted, no speed controller is necessary.
LIMIT SWITCH BOX	NIPPON VALVE CONTROLS	• WATER PROOF

ELECTRIC TYPE H

APPLICABLE TYPE

DIAPHRAGM VALVE



- EQUIPPED WITH FAILSAFE LIMIT SWITCH IN ADDITION TO STANDARD ON/OFF LIMIT SWITCH. OUTPUT CONTACT LIMIT SWITCH IS ALSO PROVIDED AS STANDARD.
- LARGE OPENING DISPLAY PROVIDES CLEAR INDICATION.
- EQUIPPED WITH MANUAL OVERRIDE FUNCTION THAT ALLOWS FOR MANUAL OPERATION BEFORE ENERGIZATION AND DURING POWER OUTAGE.

BASIC SPECIFICATIONS		ACTUATOR TYPE											UNIT
		ED-11H						ED-21H			ED-30H		
		VAVLVE SIZE (mm)											
		15	20	25	32	40	50	65	80	100	125	150	
CYCLE TIME	50Hz	20		24		43	51	38	47	56	48		s
	60Hz	16		20		36	43	32	39	47	40		
PROTECTIVE STRUCTURE		JIS C0920 WATER PROOF											
MOTOR STARTING CURRENT 50/60Hz	AC100V	0.69/0.7						2.3/2.2			5.0/4.8		A
	AC200V	0.3/0.3						1.15/1.1			2.5/2.4		
MOTOR RATED CURRENT 50/60Hz	AC100V	0.5/0.5						1.5/1.8			3.0/3.0		A
	AC200V	0.25/0.25						0.8/0.8			1.5/1.5		
NUMBER OF REVOLUTIONS OF MANUAL OPERATING HANDLE		21		25		44	52	76	94	112	128		
POWER CONSUMPTION	AC100V	47.5						142.5			285		W
	AC200V	47.5						143			285		
CABLE CONNECTOR SIZE		2-G3/4									4-G3/4		
MOTOR RATED OUTPUT		20						60			140		W
MOTOR INSULATION TYPE		E CLASS											
MOTOR RATED TIME		30											min
LIMIT SWITCH CAPACITY		AC250V 10A											
SPACE HEATER OUTPUT		10W(100V: 1kΩ, 200V: 4kΩ)									1kΩ 10W		
POTENTIOMETER MAX. APPLIED VOLTAGE		8									8		V

OPTION COMBINATION

COMBINATION NO.	1
SPACE HEATER	●
OUTPUT CONTACT LIMIT SWITCH	●

● indicates that the feature is provided as standard.
* For the specifications of positioner and potentiometer (optional), contact us. When a potentiometer is provided, the output contact limit switch is not provided.

OPTION LIST

	MANUFACTURER	BASIC SPECIFICATIONS
SPACE HEATER	SHINWA CONTROLS	• STANDARD EQUIPMENT
OUTPUT CONTACT LIMIT SWITCH	AZBIL	• INCLUDED AS STANDARD.
POTENTIOMETER	SHINWA CONTROLS	• RESISTANCE: 500Ω, 1000Ω, 2000Ω, 5000Ω, 10000Ω Note) When a potentiometer is provided, the output contact limit switch is not provided.
MANUAL OVERRIDE	SHINWA CONTROLS	• INCLUDED AS STANDARD.
SPECIAL PAINTING (ACTUATOR ONLY)	ASAHI YUKIZAI	• EPOXY PAINT, POLYURETHANE PAINT

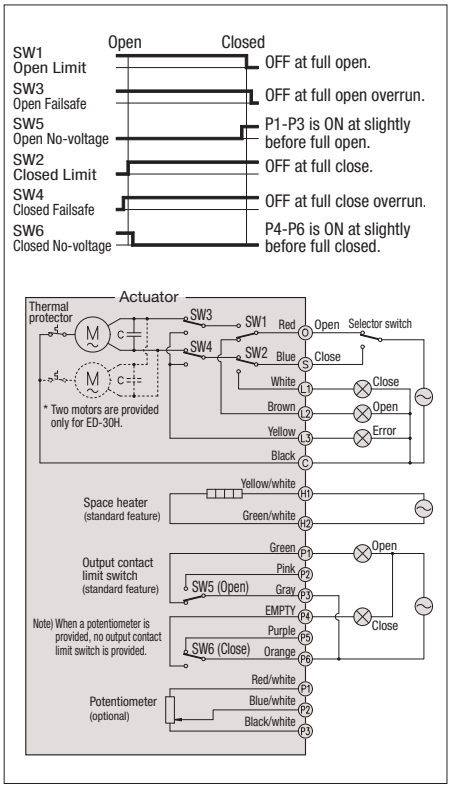

ELECTRIC **TYPE M** (MODEL: PSN, CSP)

APPLICABLE TYPE

DIAPHRAGM VALVE



- IDEAL FOR CONTROL.

BASIC SPECIFICATIONS		ACTUATOR TYPE									UNIT
		PSN1				PSN3		CSP471	CSP771		
		VAVLVE SIZE (mm)									
		15	20	25	32	40	50	65	80	100	
CYCLE TIME	50Hz	7		9		21	25	58	72	85	s
	60Hz	7		9		21	25	49	61	73	
PROTECTIVE STRUCTURE		IP55									
MOTOR CURRENT		3.0									A/PHASE
NUMBER OF REVOLUTIONS OF MANUAL OPERATING HANDLE		24		30		50	60	40	50	60	
CABLE CONNECTOR SIZE		2-G1/2									
MOTOR INSULATION TYPE		E CLASS									

OPTION LIST	MANUFACTURER	BASIC SPECIFICATIONS
E-E POSITIONER	MSYSTEM	• INCLUDED AS STANDARD.
SPECIAL PAINTING (ACTUATOR ONLY)	ASAHI YUKIZAI	• EPOXY PAINT, POLYURETHANE PAINT

15mm - 50mm

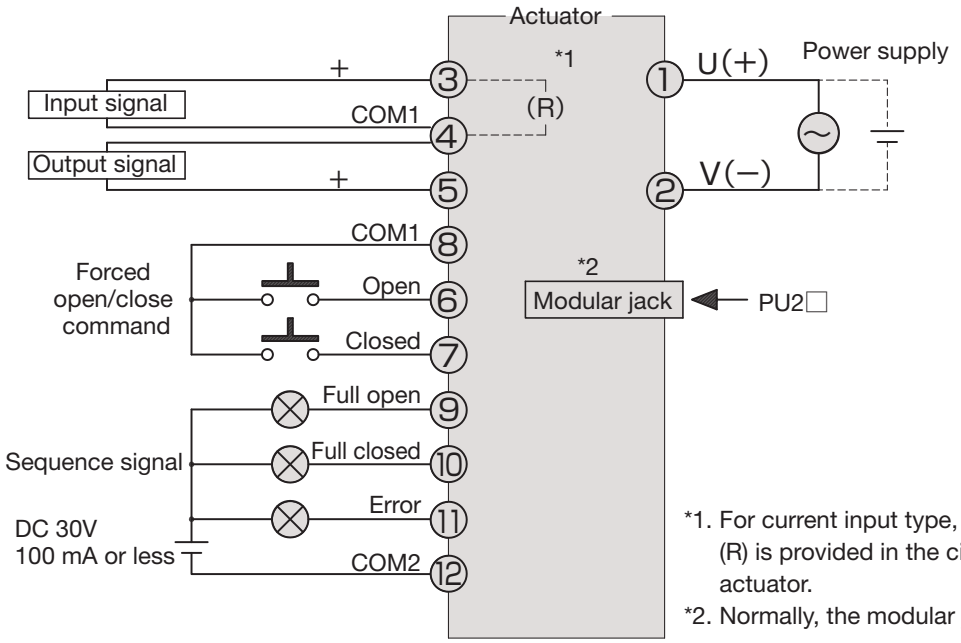

*1. For current input type, an input resistor (R) is provided in the circuit in the actuator.
*2. Normally, the modular jack is not used.

65mm - 100mm

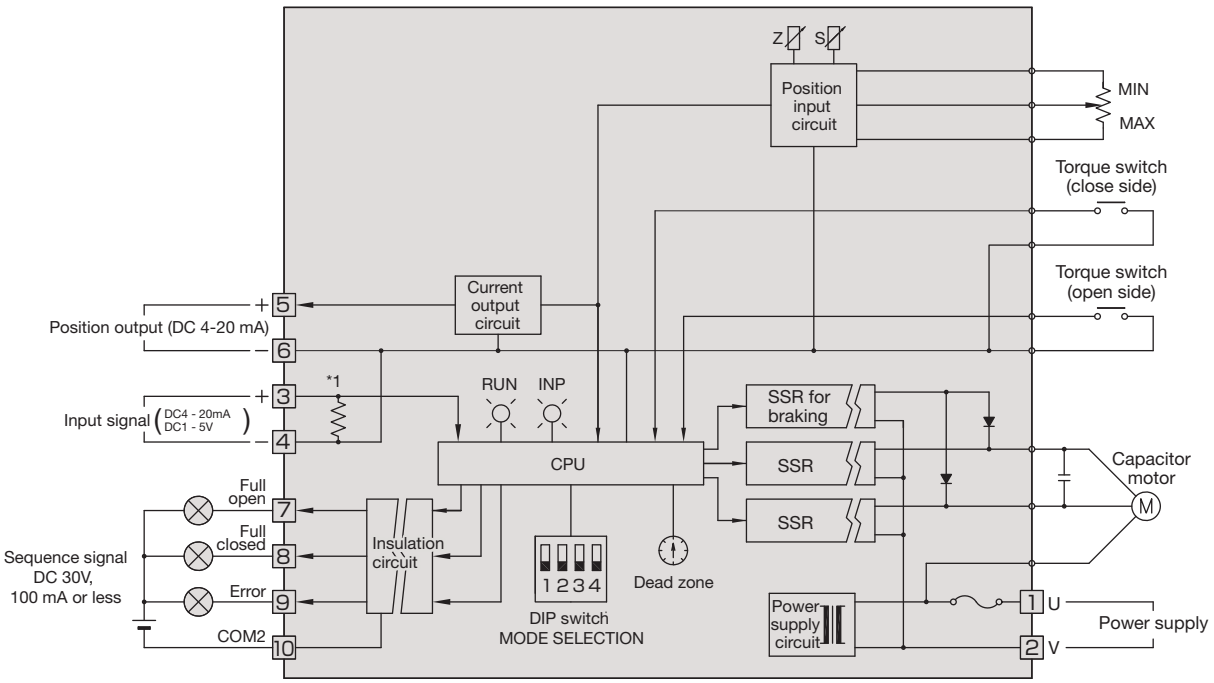

*1. When the opening setting input signal is current signal, an input resistor is provided.

ELECTRIC **TYPE M** (MODEL: MSP, PSN)

APPLICABLE TYPE

CONTROL VALVE



- OUR ORIGINAL SPECIAL PLUG SHAPE REDUCES THE EFFECTS OF FLUID VISCOSITY AND ALLOWS FOR ACCURATE FLOW CONTROL.
- USES HIGH-PERFORMANCE ALL ELECTRONIC SERVO ACTUATOR
- EQUIPPED WITH ELECTRONIC LIMITER FOR FULL CLOSED AND FULL OPEN POSITIONS AND OVERLOAD PROTECTION CIRCUIT.

BASIC SPECIFICATIONS		ACTUATOR TYPE					UNIT
		MSP6-□4	MSP6-□6	PSN1		PSN3	
		VAVLVE SIZE (mm)					
		15	25	50	80	100	
CYCLE TIME		10-35		18-21	20-22	28-32	s
PROTECTIVE STRUCTURE		IP55					
POWER CONSUMPTION (CONSUMPTION CURRENT)	AC100V-120V	Approx. 25VA		Approx. 240VA			
	AC200V-240V	Approx. 25VA		Approx. 240VA			
	DC24V±10%	Approx. 0.6VA		Approx. 3A			
VIBRATION		0.5G OR LESS		2G OR LESS			
CABLE CONNECTOR SIZE		G1/2		2-G1/2			
MOTOR INSULATION TYPE		E CLASS					
MOTOR RATED TIME		CONTINUOUS					min

OPTION LIST	MANUFACTURER	BASIC SPECIFICATIONS
E-E POSITIONER	MSYSTEM	• INCLUDED AS STANDARD.
SPECIAL PAINTING (ACTUATOR ONLY)	ASAHI YUKIZAI	• EPOXY PAINT, POLYURETHANE PAINT

15mm - 25mm

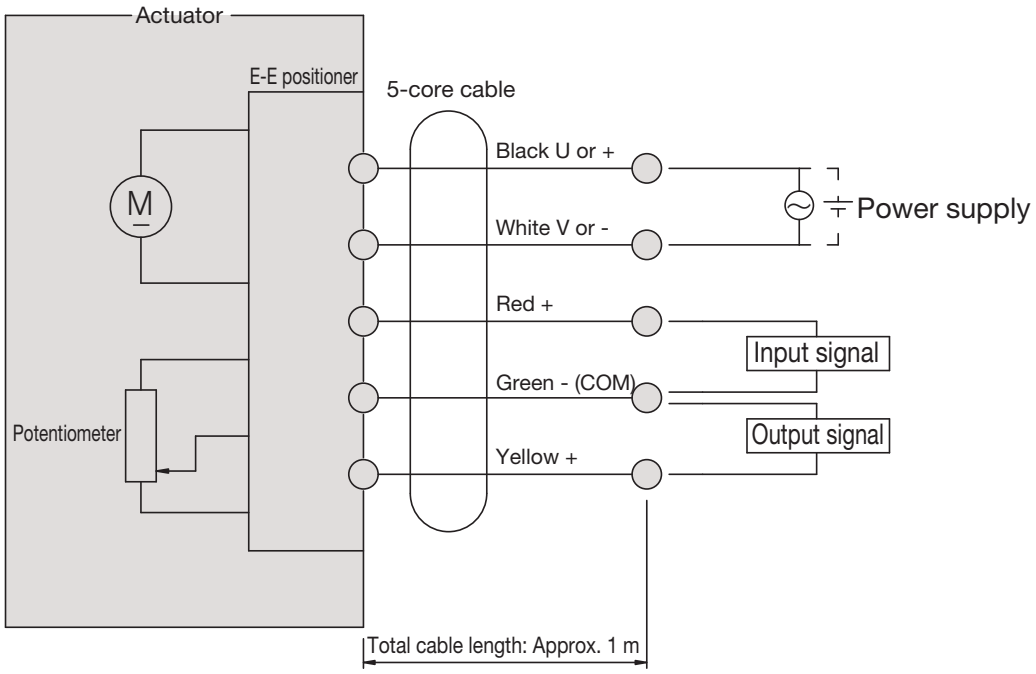

50mm - 100mm

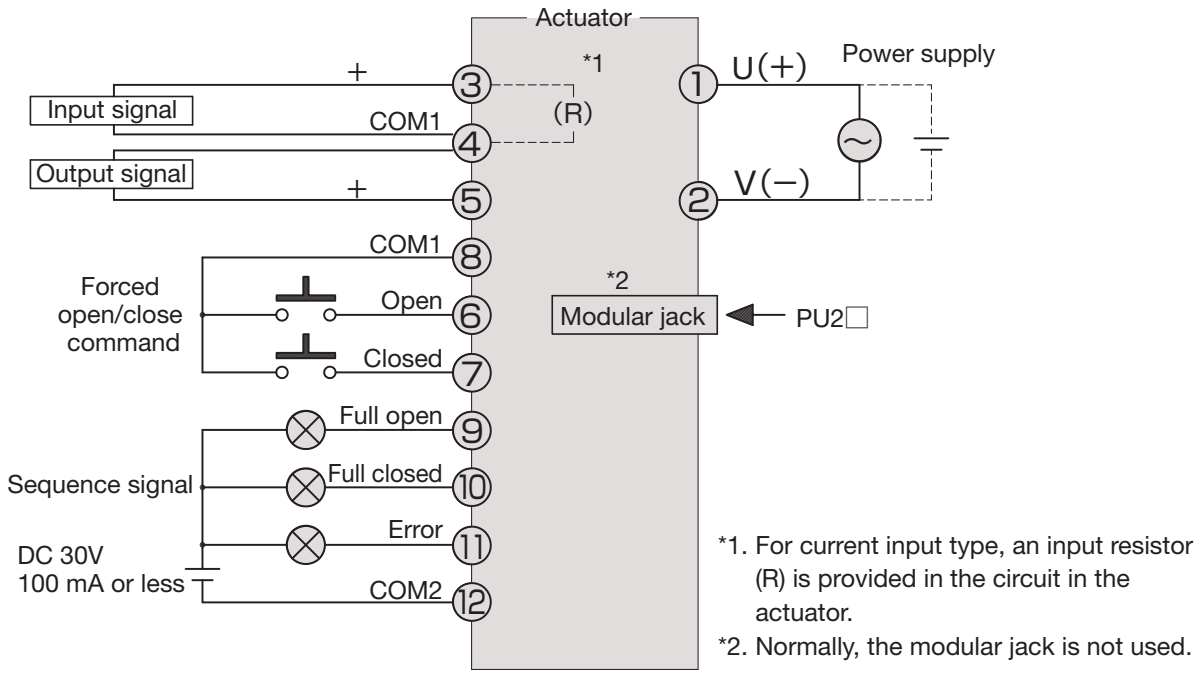

*1. For current input type, an input resistor (R) is provided in the circuit in the actuator.
*2. Normally, the modular jack is not used.

ELECTRIC TYPE S (MODEL: LTRM, LTMD)

APPLICABLE TYPE

DIAPHRAGM VALVE



- EQUIPPED WITH TORQUE SWITCH AS STANDARD TO PREVENT VALVE DAMAGE DUE TO OVERLOAD.
- AUTOMATIC RETURN MECHANISM ELIMINATES CLUTCH OPERATION AFTER MANUAL OPERATION.

BASIC SPECIFICATIONS

		ACTUATOR TYPE				UNIT
		LTRM-01 LTRH-01	LTMD-01 LTKD-01		LTMD-02 LTKD-02	
		VAVLVE SIZE (mm)				
		125	150	200	250	
CYCLE TIME	50Hz	29	54	75.5	90	s
	60Hz	24	46.5	63	75	
PROTECTIVE STRUCTURE		IP55				
MOTOR STARTING CURRENT 50/60Hz	AC200V	8.8/8.3	8.0/7.4		15.6/15.2	A
	AC400V	4.4/4.1	4.0/3.7		7.8/7.6	
MOTOR RATED CURRENT 50/60Hz	AC200V	3.0/2.4	2.5/2.2		4.4/4.0	A
	AC400V	1.5/1.2	1.3/1.1		2.2/2.0	
NUMBER OF REVOLUTIONS OF MANUAL OPERATING HANDLE		10		16	18	
POWER CONSUMPTION 50/60Hz	AC200V	397/361	650/610	—	—	W
	AC400V	397/361	650/610	—	—	
CABLE CONNECTOR SIZE		2-G1	OPERATION CIRCUIT: 2-G1, MOTOR CIRCUIT: G3/4			
MOTOR RATED OUTPUT		400			750	W
MOTOR INSULATION TYPE		E CLASS				
MOTOR RATED TIME		15				min
LIMIT SWITCH CAPACITY		AC250V 5A				
MOTOR POLE		4				P
SPACE HEATER RATED OUTPUT		10				W
POTENTIOMETER MAX. APPLIED VOLTAGE	100Ω	15				V
	200Ω	20				
	500Ω	30				
	1kΩ	45				

OPTION COMBINATION

COMBINATION NO.	1	2	3	4
SPACE HEATER	●	●	●	●
OUTPUT CONTACT LIMIT SWITCH	○	—	—	—
POTENTIOMETER	○	—	—	—
R/I TRANSMITTER	—	—	○	○
E-E POSITIONER*	—	—	—	○

● indicates that the feature is provided as standard.
* The actuator type is different.

OPTION LIST

	MANUFACTURER	BASIC SPECIFICATIONS
SPACE HEATER	TAMAOHM	• INCLUDED AS STANDARD.
OUTPUT CONTACT LIMIT SWITCH	SEIBU ELECTRIC& MACHINERY	
POTENTIOMETER	MIDORI PRECISIONS	• RESISTANCE: 100Ω, 200Ω, 500Ω, 1000Ω
R/I TRANSMITTER	SEIBU ELECTRIC& MACHINERY	
E-E POSITIONER	SEIBU ELECTRIC& MACHINERY	
MANUAL OVERRIDE	SEIBU ELECTRIC& MACHINERY	• INCLUDED AS STANDARD.
SPECIAL PAINTING (ACTUATOR ONLY)	SEIBU ELECTRIC& MACHINERY	• POLYURETHANE PAINT

125mm - 250mm

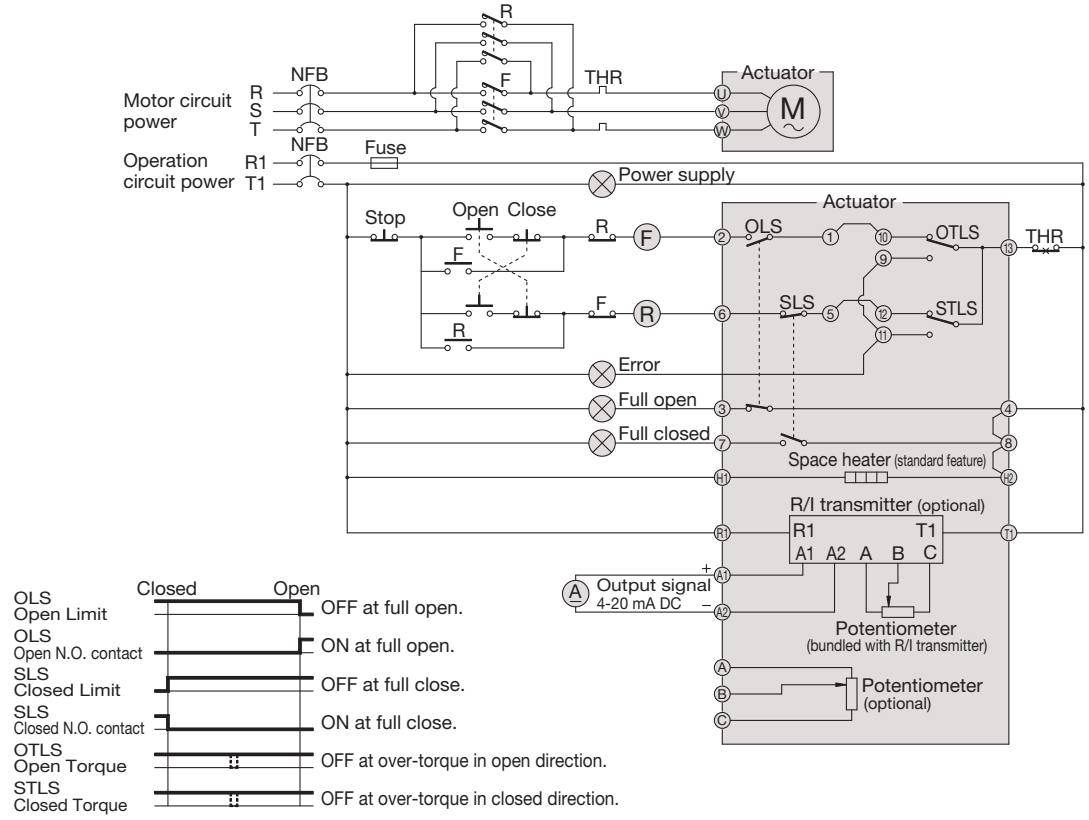
R
NFB
F
THR
Actuator
Motor circuit power
R
S
T
U
V
W
M
NFB
Fuse
Operation circuit power
R1
T1
Power supply
Actuator
Stop
Open
Close
R
F
OLS
OTLS
THR
SLS
STLS
Error
Full open
Full closed
Space heater (standard feature)
R/I transmitter (optional)
R1
T1
A1 A2 A B C
Output signal
4-20 mA DC
Potentiometer
(bundled with R/I transmitter)
Potentiometer
(optional)
Closed
Open
OLS
Open Limit
OFF at full open.
OLS
Open N.O. contact
ON at full open.
SLS
Closed Limit
OFF at full close.
SLS
Closed N.O. contact
ON at full close.
OTLS
Open Torque
OFF at over-torque in open direction.
STLS
Closed Torque
OFF at over-torque in closed direction.

ELECTRIC **TYPE S** (MODEL: SRJ)

APPLICABLE TYPE
- BUTTERFLY VALVE
- ROTARY DAMPER



- EASY EXTERNAL WIRING (TERMINAL BOX WIRING PORT 3-G1)
- EXCELLENT WATERPROOF PERFORMANCE (IP68)
- EQUIPPED WITH MANUAL HANDLE AS STANDARD (SWITCH LEVER TYPE AUTOMATIC RETURN MECHANISM)
- EQUIPPED WITH TORQUE SWITCH AS STANDARD TO PREVENT VALVE DAMAGE DUE TO OVERLOAD.

BASIC SPECIFICATIONS

		ACTUATOR TYPE			UNIT
		SRJ-010	SRJ-020	SRJ-060	
CYCLE TIME	50Hz	18	36		s
	60Hz	15	30		
PROTECTIVE STRUCTURE		IP68			
MOTOR STARTING CURRENT 50/60Hz	AC200V	1.27/1.19		1.89/1.77	A
	AC400V	0.63/0.58		0.94/0.90	
MOTOR RATED CURRENT 50/60Hz	AC200V	0.53/0.45		0.74/0.67	A
	AC400V	0.26/0.22		0.37/0.34	
NUMBER OF REVOLUTIONS OF MANUAL OPERATING HANDLE		21		26	
POWER CONSUMPTION 50/60Hz	AC200V	82.7/76.0		162/156	W
	AC400V	84.7/78.8		163/159	
CABLE CONNECTOR SIZE		G1			
MOTOR RATED OUTPUT		40		100	W
MOTOR INSULATION TYPE		B CLASS			
MOTOR RATED TIME		15			min
LIMIT SWITCH CAPACITY		AC250V 2A			
MOTOR POLE		4			P
SPACE HEATER RATED OUTPUT		8			W
POTENTIOMETER MAX. APPLIED VOLTAGE	135Ω	7.3			V
	200Ω	12.6			
	500Ω	14			

OPTION COMBINATION

COMBINATION NO.	1	2	3
SPACE HEATER	●	●	●
OUTPUT CONTACT LIMIT SWITCH	●	●	●
POTENTIOMETER	○	○	○
R/I TRANSMITTER	—	○	○
E-E POSITIONER	—	—	○

● indicates that the feature is provided as standard.

	MANUFACTURER	BASIC SPECIFICATIONS
SPACE HEATER	KURABE INDUSTRIAL	• INCLUDED AS STANDARD.
OUTPUT CONTACT LIMIT SWITCH	SEIBU ELECTRIC& MACHINERY	• INCLUDED AS STANDARD.
POTENTIOMETER	MIDORI PRECISIONS	• RESISTANCE: 133Ω, 200Ω, 500Ω, 1000Ω
R/I TRANSMITTER	SEIBU ELECTRIC& MACHINERY	
E-E POSITIONER	SEIBU ELECTRIC& MACHINERY	• STANDARD TYPE, HIGH RESOLUTION TYPE * When an E-E positioner is provided, the operating power supply is single phase (AC 100V, AC 200V).
MANUAL OVERRIDE	SEIBU ELECTRIC& MACHINERY	• INCLUDED AS STANDARD.
SPECIAL PAINTING (ACTUATOR ONLY)	SEIBU ELECTRIC& MACHINERY	• POLYURETHANE PAINT

BUTTERFLY VALVE 40mm - 250mm **ROTARY DAMPER** 40mm - 600mm

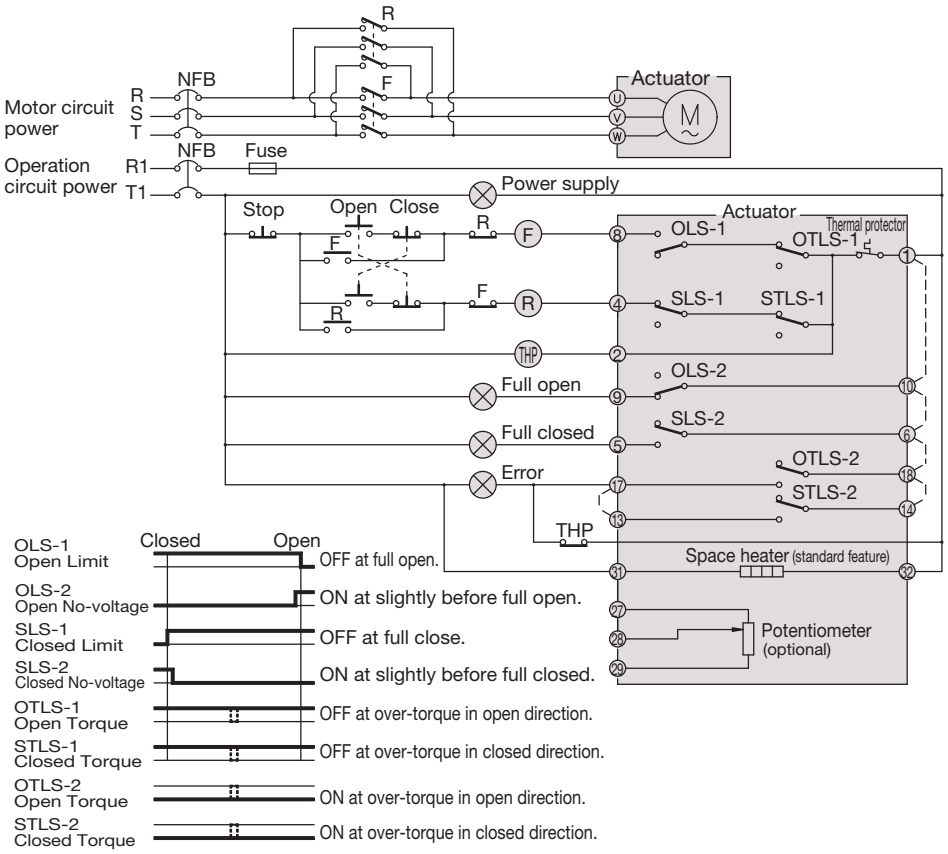

ELECTRIC TYPE S (MODEL: LTRM, LTMD/BRM)

APPLICABLE TYPE

BUTTERFLY VALVE

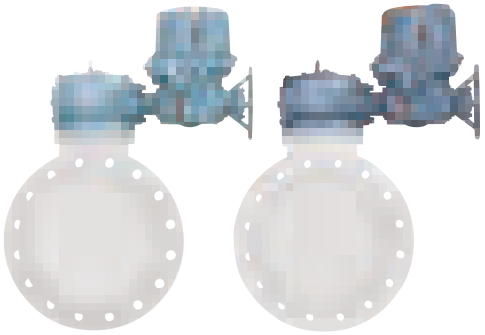

- EQUIPPED WITH TORQUE SWITCH AS STANDARD TO PREVENT VALVE DAMAGE DUE TO OVERLOAD.
- AUTOMATIC RETURN MECHANISM ELIMINATES CLUTCH OPERATION AFTER MANUAL OPERATION.
- THE STOPPER ALLOWS FOR ANGLE ADJUSTMENT OF ±5° AT FULL OPEN/CLOSED POSITIONS.

BASIC SPECIFICATIONS

		ACTUATOR TYPE							UNIT
		LTRM-01/BRM-1 LTRH-01/BRM-1		LTRM-01/BRM-2 LTRH-01/BRM-2	LTMD-01/BRM-3 LTKD-01/BRM-3				
		VAVLVE SIZE (mm)							
		300	350	400～600	400	450	500	600	
		BODY MATERIAL							
		U-PVC,PP,PVDF		PP,PVDF	PDCPD				
CYCLE TIME	50Hz	43		41	38		49		s
	60Hz	36		34	41		50		
PROTECTIVE STRUCTURE		IP55							
MOTOR STARTING CURRENT 50/60Hz	AC200V	7.60/7.00		10.2/9.6					A
	AC400V	4.10/3.80		4.6/4.4					
MOTOR RATED CURRENT 50/60Hz	AC200V	1.8/1.4		2.5/2.2					A
	AC400V	0.91/0.75		1.2/0.99					
NUMBER OF REVOLUTIONS OF MANUAL OPERATING HANDLE		15							
POWER CONSUMPTION 50/60Hz	AC200V	240/215		620/593	620/593				W
	AC400V	229/220		625/556	620/593				
CABLE CONNECTOR SIZE		OPERATION CIRCUIT: 3-G1, MOTOR CIRCUIT: 1-G3/4			OPERATION CIRCUIT: 2-G1, MOTOR CIRCUIT: 1-G3/4				
MOTOR RATED OUTPUT		200		400					W
MOTOR INSULATION TYPE		B CLASS							
MOTOR RATED TIME		15							min
LIMIT SWITCH CAPACITY		AC250V 5A							
MOTOR POLE		4							P
SPACE HEATER RATED OUTPUT		10			30				W
POTENTIOMETER MAX. APPLIED VOLTAGE	135Ω	15							V
	200Ω	20							
	500Ω	30							
	1kΩ	45							

OPTION COMBINATION

COMBINATION NO.	1	2	3	4
SPACE HEATER	●	●	●	●
OUTPUT CONTACT LIMIT SWITCH	○	—	—	—
POTENTIOMETER	—	○	○	○
R/I TRANSMITTER	—	—	○	○
E-E POSITIONER*	—	—	—	○

● indicates that the feature is provided as standard.
* The actuator type is different.

OPTION LIST

	MANUFACTURER	BASIC SPECIFICATIONS
SPACE HEATER	TAMAOHM	• INCLUDED AS STANDARD.
OUTPUT CONTACT LIMIT SWITCH	SEIBU ELECTRIC& MACHINERY	
POTENTIOMETER	MIDORI PRECISIONS	• RESISTANCE: 100Ω, 200Ω, 500Ω, 1000Ω
R/I TRANSMITTER	SEIBU ELECTRIC& MACHINERY	
E-E POSITIONER	SEIBU ELECTRIC& MACHINERY	
MANUAL OVERRIDE	SEIBU ELECTRIC& MACHINERY	• INCLUDED AS STANDARD.
SPECIAL PAINTING (ACTUATOR ONLY)	SEIBU ELECTRIC& MACHINERY	• POLYURETHANE PAINT

300mm - 400mm

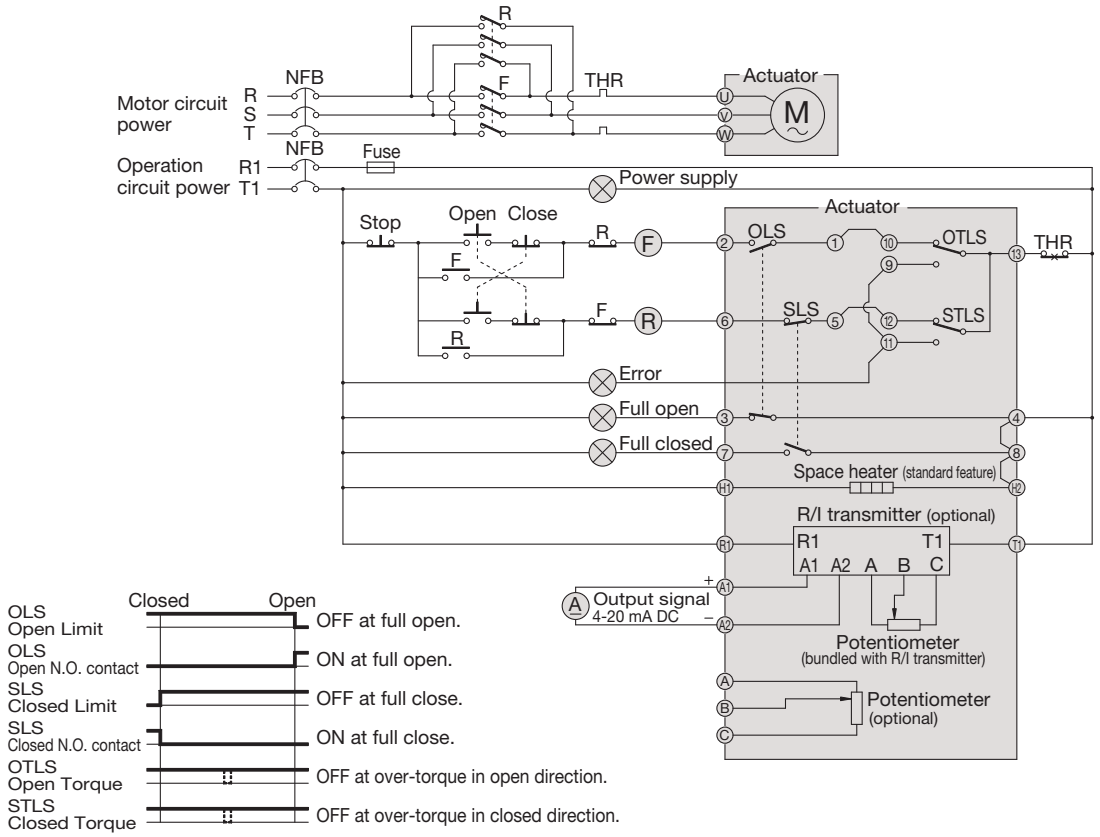

450mm - 600mm

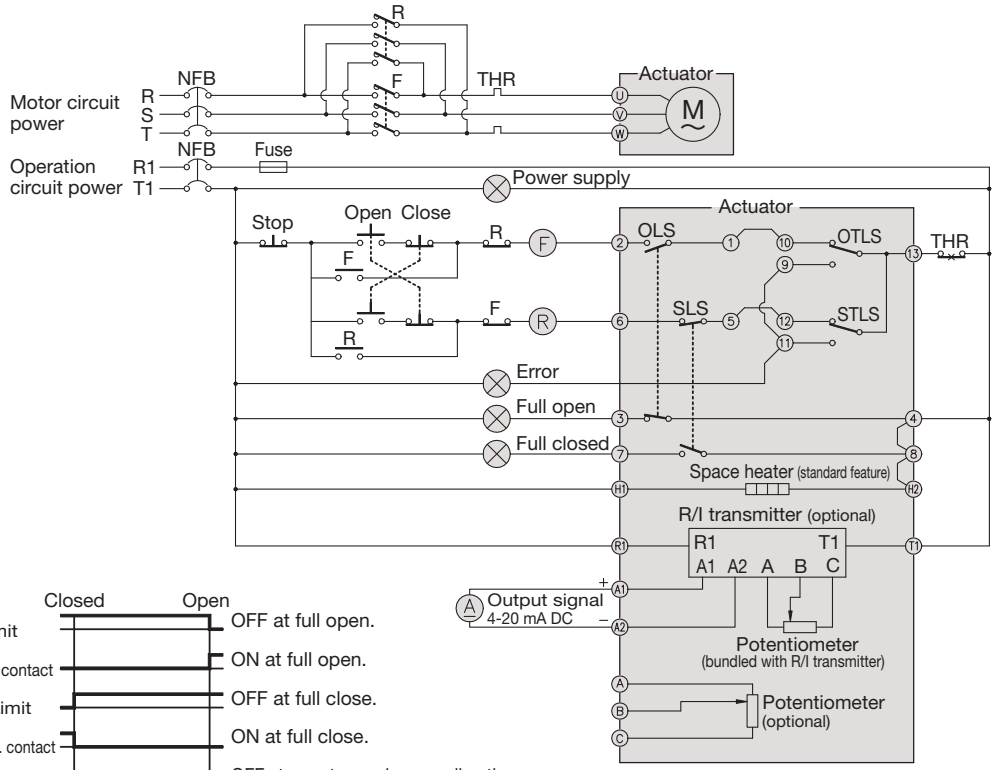

ELECTRIC TYPE S (PDCPD LARGE SIZE)

APPLICABLE TYPE

BUTTERFLY VALVE



- MUCH LIGHTER WEIGHT SINCE THE SPECIFIC WEIGHT OF PDCPD IS 1/7 OF THAT OF CAST IRON.
- EXCELLENT WATERTIGHTNESS DUE TO SYNTHETIC RUBBER SEAT PACKING
- EQUIPPED WITH TORQUE SWITCH AS STANDARD TO PREVENT VALVE DAMAGE DUE TO OVERLOAD.
- AUTOMATIC RETURN MECHANISM ELIMINATES CLUTCH OPERATION AFTER MANUAL OPERATION.
- THE STOPPER ALLOWS FOR ANGLE ADJUSTMENT OF ±5° AT FULL OPEN/ CLOSED POSITIONS.

BASIC SPECIFICATIONS

		ACTUATOR TYPE *1						UNIT
		LTMD-02/BRM10	LTMD-05/BRM10		LTMD-05/BRM-18	LTMD-1/BRM-18		
CYCLE TIME	50Hz	75	68	43	50	50	68	s
	60Hz	63	76	51	49	57	69	
PROTECTIVE STRUCTURE		IP55						
MOTOR STARTING CURRENT 50/60Hz	AC200V	18.9/17.3		38.0/35.0	57.8/51.7			A
	AC400V	9.0/8.4		19.0/17.5	28.9/25.9			
MOTOR RATED CURRENT 50/60Hz	AC200V	3.9/3.5		7.7/6.0	11/9.8			A
	AC400V	1.9/1.8		3.9/3.5	5.3/4.8			
NUMBER OF REVOLUTIONS OF MANUAL OPERATING HANDLE		15	333		615			
INSULATION RESISTANCE		100MΩ						
AMBIENT TEMPERATURE		-25~50						°C
CABLE CONNECTOR SIZE		OPERATION CIRCUIT: 2-G1, MOTOR CIRCUIT: 1-G3/4						
MOTOR RATED OUTPUT		0.75		1.5	2.2			W
MOTOR INSULATION TYPE		B CLASS						
MOTOR RATED TIME		15						min
LIMIT SWITCH CAPACITY		AC250V 5A						
MOTOR POLE		4						P
SPACE HEATER RATED OUTPUT		30						W

*1 When an E-E positioner is provided, "Z" is added at the end of the model designation. (Example: LTMD-02Z/BRM-10)

OPTION COMBINATION

COMBINATION NO.	1	2	3	4
SPACE HEATER	●	●	●	●
OUTPUT CONTACT LIMIT SWITCH	○	—	—	—
POTENTIOMETER	—	○	○	○
R/I TRANSMITTER	—	—	○	○
E-E POSITIONER*	—	—	—	○

● indicates that the feature is provided as standard.
* The actuator type is different.

OPTION LIST

	MANUFACTURER	BASIC SPECIFICATIONS
SPACE HEATER	TAMAOHM	• INCLUDED AS STANDARD.
OUTPUT CONTACT LIMIT SWITCH	SEIBU ELECTRIC& MACHINERY	
POTENTIOMETER	MIDORI PRECISIONS	• RESISTANCE: 100Ω, 200Ω, 500Ω, 1000Ω
R/I TRANSMITTER	SEIBU ELECTRIC& MACHINERY	
E-E POSITIONER	SEIBU ELECTRIC& MACHINERY	
MANUAL OVERRIDE	SEIBU ELECTRIC& MACHINERY	• INCLUDED AS STANDARD.
SPECIAL PAINTING (ACTUATOR ONLY)	SEIBU ELECTRIC& MACHINERY	• POLYURETHANE PAINT

700mm - 1,200mm

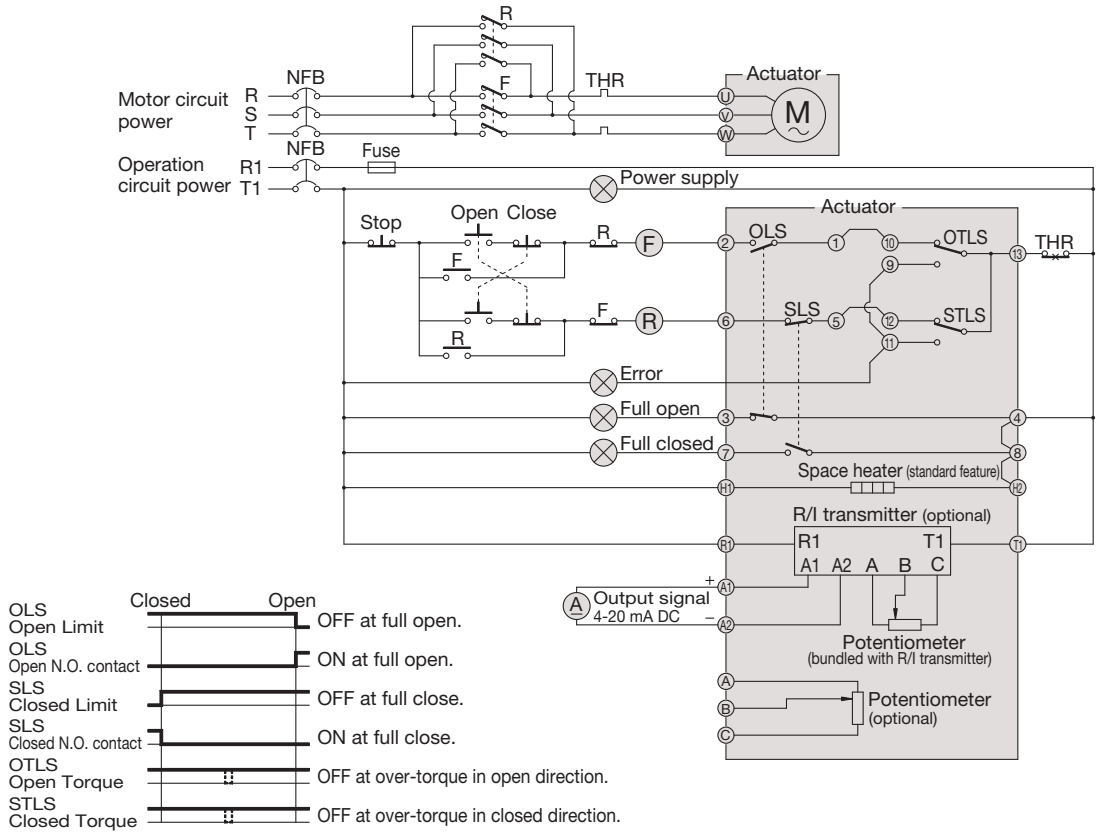

ELECTRIC TYPE T

APPLICABLE TYPE

BALL VALVE | BUTTERFLY VALVE | ROTARY DAMPER

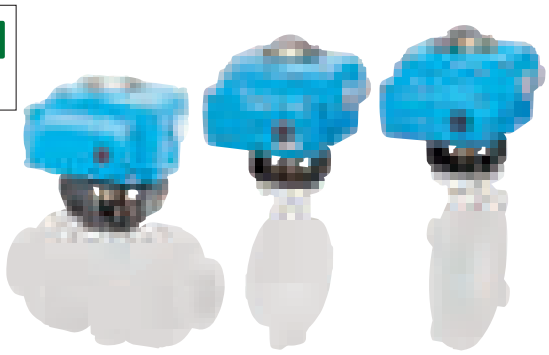

- LIGHT WEIGHT, COMPACT SIZE AND HIGH OUTPUT POWER
- THE PROTECTIVE STRUCTURE OF ACTUATOR IS EQUIVALENT TO IP65.
- MANUAL OVERRIDE FUNCTION ALLOWS FOR OPERATION WITH ALLEN WRENCH (5 mm).
- EASY-TO-UNDERSTAND OPENING DISPLAY

BASIC SPECIFICATIONS			ACTUATOR TYPE T-00	T-0	T-1	T-2	T-2.5	T-3	UNIT
CYCLE TIME	50Hz		10	25			37	55	s
	60Hz		8	20			30	50	
PROTECTIVE STRUCTURE			PROTECTION RATING 5 JETPROOF TYPE						
MOTOR STARTING CURRENT 50/60Hz	AC100V	100V *1	0.80/0.80	1.20/1.20	1.6/1.4	2.4/2.4		5.1/4.8	A
	AC110V		1.00/1.00	1.40/1.40	1.7/1.7	2.5/2.5		6.1/6.6	
	AC200V	200V *1	0.50/0.50	0.50/0.50	0.7/0.7	1.1/1.1		2.6/2.4	
	AC220V		0.70/0.70	0.70/0.70	0.8/0.9	1.2/1.2		3.1/3.0	
	AC220V	220V *1	—	—	0.7/0.7	1.1/1.0		2.3/2.3	
	AC240V	240V *1	—	—	0.6/0.6	0.9/0.9		2.1/2.2	
MOTOR RATED CURRENT 50/60Hz	AC100V	100V *1	0.40/0.40	0.50/0.50	0.7/0.6	0.9/1.2		1.6/1.7	A
	AC110V		0.50/0.50	0.60/0.60	0.9/0.7	1.0/1.2		1.7/1.8	
	AC200V	200V *1	0.25/0.25	0.25/0.25	0.4/0.3	0.5/0.8		0.8/1.0	
	AC220V		0.30/0.30	0.30/0.30	0.5/0.4	0.6/0.8		0.9/1.0	
	AC220V	220V *1	—	—	0.4/0.3	0.5/0.5		0.7/0.8	
	AC240V	240V *1	—	0.25/0.25	0.3/0.3	0.5/0.6		0.6/0.6	
NUMBER OF REVOLUTIONS OF MANUAL OPERATING HANDLE (0 - 90 DEG)			7.5	6.7	16.5				
CABLE CONNECTOR SIZE			G1/2		G1/2 (PF1/2) 2 PLACES				
MOTOR RATED OUTPUT			8		20	30		90	W
MOTOR INSULATION TYPE			E CLASS						
MOTOR RATED TIME			30						min
LIMIT SWITCH CAPACITY*2			AC250V 5A	AC250V 10A					
SPACE HEATER RATED OUTPUT			2*3	8					W
AMBIENT TEMPERATURE			-10～50°C						°C

*1. Motor power source. *2. If the value is equal to or lower than the contact capacity of limit switch (1 mA - 100 mA, 5 - 30V), contact our sales office in your area.
*3. The space heater for T-00 is optional.

OPTION COMBINATION

T-00

COMBINATION NO.	1	2	3
SPACE HEATER	○	—	○
MANUAL HANDLE	—	○	○

T-0, T-1, T-2, T-2.5, T-3

COMBINATION NO.	1	2	3	4	5	6	7
SPACE HEATER	●	●	○	●	○	●	○
OUTPUT CONTACT LIMIT SWITCH	●	●	●	—	●	—	●
POTENTIOMETER	—	○	—	—	—	○	○
E-E POSITIONER	—	—	○	—	—	—	—
INTERMEDIATE OUTPUT CONTACT LIMIT SWITCH	—	—	—	○	—	○	—
SPEED CONTROLLER	—	—	—	—	○	—	○

● indicates that the feature is provided as standard.

OPTION LIST

	MANUFACTURER	BASIC SPECIFICATIONS
SPACE HEATER	TOMOE VALVE	• PROVIDED AS STANDARD FOR T-0 OR ABOVE.
OUTPUT CONTACT LIMIT SWITCH	PANASONIC OMRON	• INCLIDED AS STANDARD. (T-00: PANASONIC, T-0-3: OMRON)
POTENTIOMETER	TOMOE VALVE	• RESISTANCE: 135Ω, 500Ω
E-E POSITIONER	TOMOE VALVE	
INTERMEDIATE OUTPUT CONTACT LIMIT SWITCH	PANASONIC OMRON	T-00: PANASONIC, T-0-3: OMRON
SPEED CONTROLLER	TOMOE VALVE	
MANUAL OVERRIDE	TOMOE VALVE	• INCLUDED AS STANDARD (T-00, T-0: MANUAL OPERATION SHAFT/ HEXAGONAL WRENCH, T-1-3: MANUAL OPERATING WHEEL)
SPECIAL PAINTING (ACTUATOR ONLY)	ASAHI YUKIZAI	• POLYURETHANE PAINT
SPECIAL FITTING	ASAHI YUKIZAI	• SUS304

BALL VALVE TYPE 21, 21α 15mm - 50mm

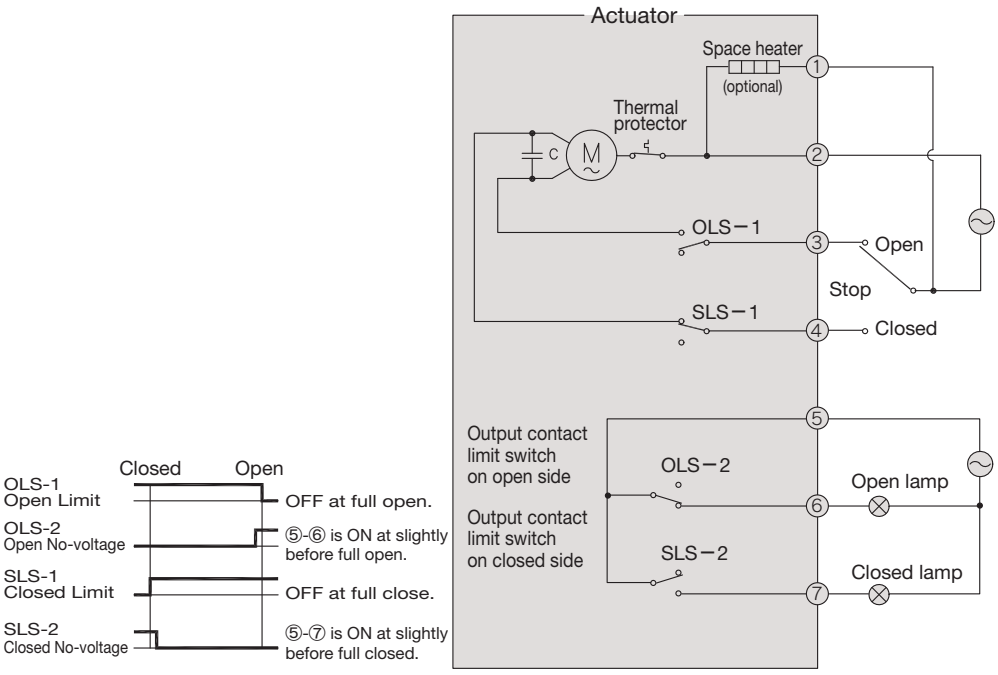

BALL VALVE TYPE 21, TYPE 21α 65mm-100mm

BUTTERFLY VALVE TYPE 57 40mm - 350mm

BUTTERFLY VALVE TYPE 55 50mm - 250mm

ROTARY DAMPER 40mm - 400mm

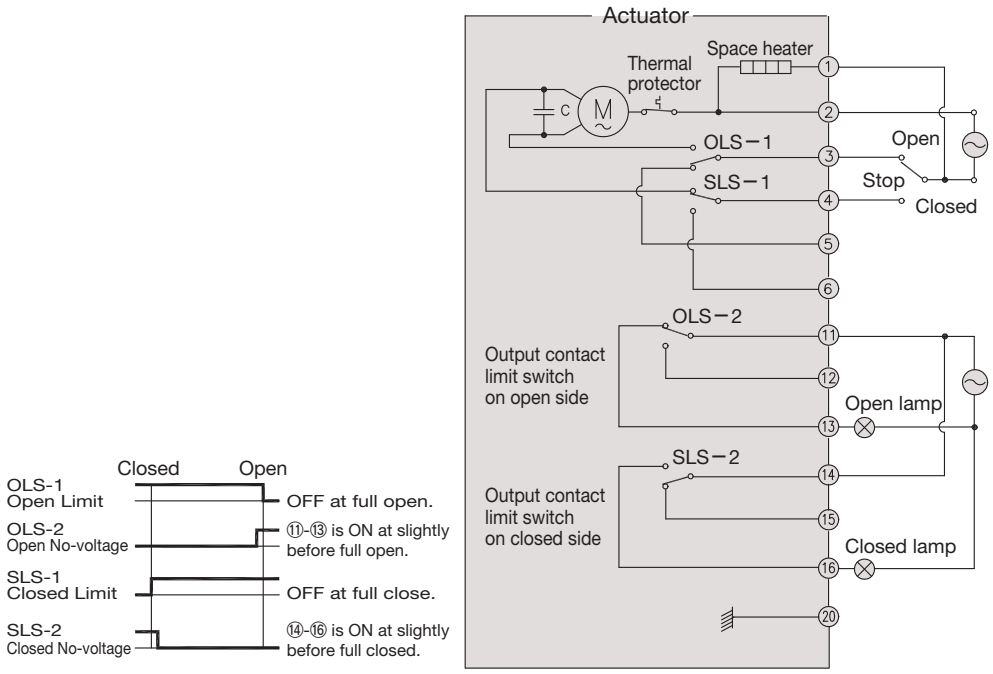

3 WAY BALL VALVE TYPE 23 15mm - 50mm

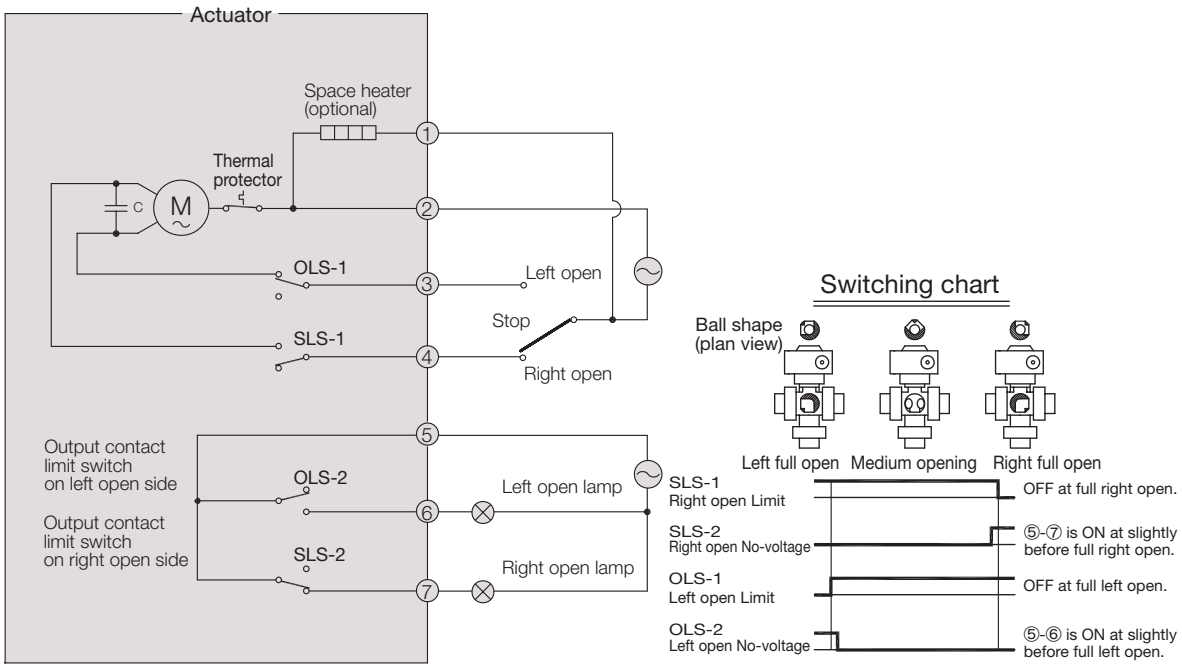

3 WAY BALL VALVE TYPE 23 65mm - 100mm

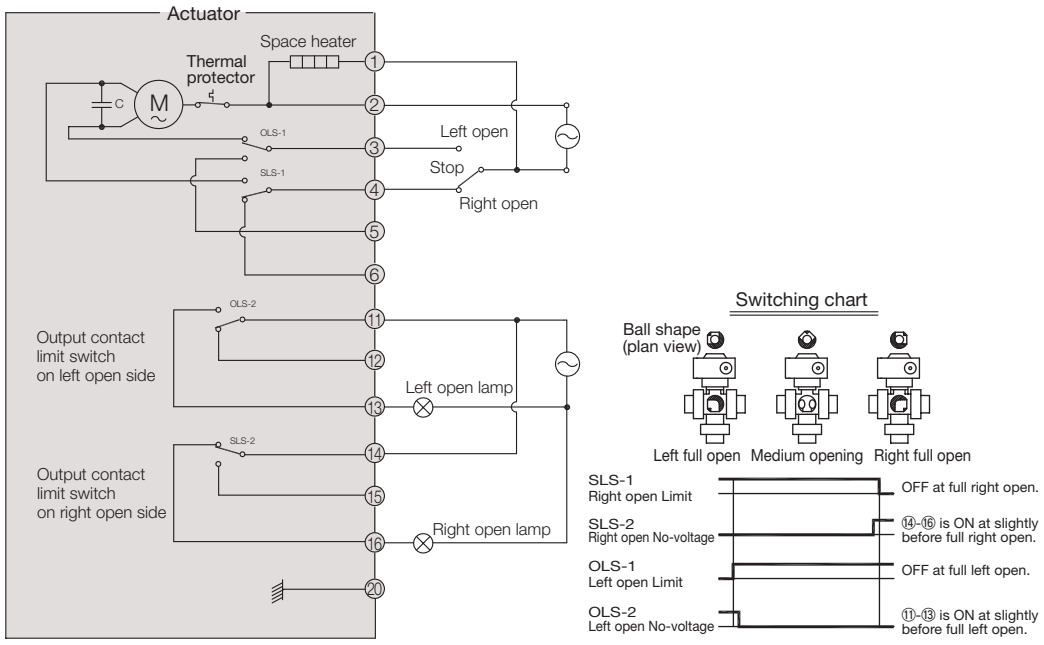

Note: The wiring diagram shows the state at
the completion of right open movement.

ELECTRIC TYPE V

APPLICABLE TYPE

BALL VALVE



- LIGHTWEIGHT AND COMPACT SIZE
- CAN BE MANUALLY OPENED AND CLOSED BY LOOSENING THE LOCK SCREW AND TURNING THE OPERATING UNIT IN THE OPEN OR CLOSED DIRECTION.
- THE PRODUCT LINE ALLOWS FOR SELECTION ACCORDING TO THE FLUID TO BE USED. BALL VALVE TYPE 21 FOR CHEMICAL SOLUTION LINES AND WATER BALL VALVE FOR WATER/SEA WATER LINES CAN BE SELECTIVELY USED, WHICH CONTRIBUTES TO TOTAL COST REDUCTION.

BASIC SPECIFICATIONS
(AC POWER SUPPLY: AM1)
NIPPON VALVE CONTROLS

		ACTUATOR TYPE						UNIT
		AM1-030		AM1-070		AM1-180		
		VAVLVE SIZE (mm)						
		15	20	25	32	40	50	
RATED TORQUE		3		7		18		N·m
CYCLE TIME	50Hz	5.4		15.5		16		s
	60Hz	4.5		13		13.5		
POWER CONSUMPTION		16				19		VA
POWER SUPPLY	50Hz	AC100/110, AC200/220 (SINGLE PHASE)						V
	60Hz	AC100/110, AC200/220 (SINGLE PHASE)						
MOTOR		SYNCHRONOUS MOTOR						
MOTOR PROTECTION		EQUIPPED WITH THERMAL PROTECTOR						
OUTPUT SIGNAL LOAD CURRENT		Max.0.7A(120V)/0.5A(AC250V)						
		* Min. applicable load: 100 mA (AC 100/200V)						
OPERATING AMBIENT TEMPERATURE		-20-55						°C
DUTY FACTOR (%ED)		20% 15min						
SPACE HEATER RATED OUTPUT		1						W
PROTECTIVE STRUCTURE		OUTDOOR RAINPROOF STRUCTURE (EQUIVALENT TO IP65)						
MAIN MATERIAL		CASE: ALUMINUM DIE-CAST / COVER: POLYCARBONATE						
WIRE DRAWING TYPE		G3/8 WIRE CONNECTOR PROVIDED (FOR ø5-10.5 CABTYRE CABLE)						
KIND OF WIRE		0.14-1.5mm2(AWG26-14)						

BASIC SPECIFICATIONS
(DC POWER SUPPLY: DM2)
NIPPON VALVE CONTROLS

	ACTUATOR TYPE						UNIT
	DM2-030		DM2-070		DM2-180		
	VAVLVE SIZE (mm)						
	15	20	25	32	40	50	
RATED TORQUE	3		7		18		N·m
CYCLE TIME	2-3.5		2-3		4-6		s
POWER CONSUMPTION	Max.10		Max.24				VA
POWER SUPPLY	DC24						V
MOTOR	DC MOTOR						
MOTOR PROTECTION	EQUIPPED WITH THERMISTOR (CURRENT LIMITER TYPE)						
OUTPUT SIGNAL LOAD CURRENT	DC24V 33mA-4A						
OPERATING AMBIENT TEMPERATURE	-20-55						°C
DUTY FACTOR (%ED)	20% 15min						
CONDENSATION PREVENTION MEASURES	EQUIPPED WITH BUILT-IN SPACE HEATER (1W)						W
PROTECTIVE STRUCTURE	OUTDOOR RAINPROOF STRUCTURE (EQUIVALENT TO IP65)						
MAIN MATERIAL	CASE: ALUMINUM DIE-CAST / COVER: POLYCARBONATE						
WIRE DRAWING TYPE	G3/8 WIRE CONNECTOR PROVIDED (FOR ø5-10.5 CABTYRE CABLE)						
KIND OF WIRE	0.14-1.5mm2(AWG26-14)						

15mm - 50mm

DM2: DC power supply dedicated type

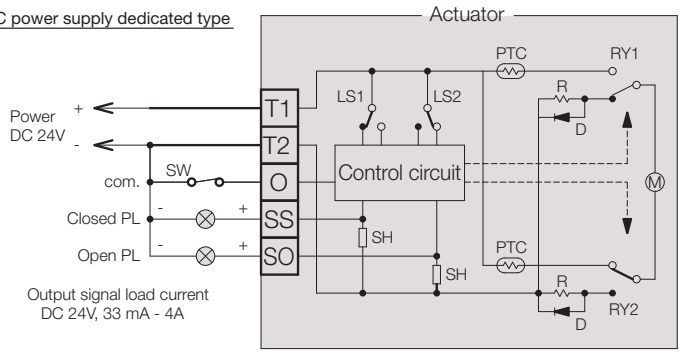

Output signal load current
DC 24V, 33 mA - 4A

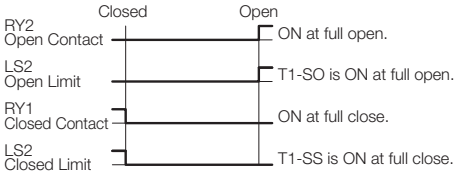

AM1: AC Power Supply Transfer Input Type

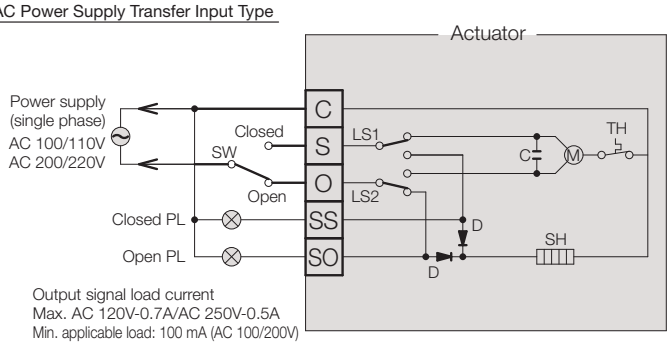

Output signal load current
Max. AC 120V-0.7A/AC 250V-0.5A
Min. applicable load: 100 mA (AC 100/200V)

Used voltage (single phase)	Frequency
☐ AC 100V ☐ AC 110V ☐ AC 200V ☐ AC 220V	☐ 50Hz ☐ 60Hz

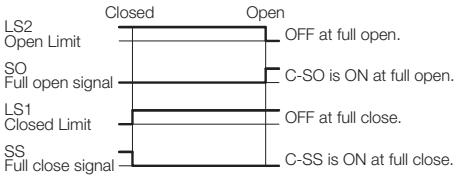

ASAHI/AV
CHECK VALVE

P.147 SWING CHECK VALVE

P.149 WAFER CHECK VALVE

P.151 BALL CHECK VALVE

P.153 TRUE UNION BALL CHECK VALVE

P.155 BALL FOOT VALVE

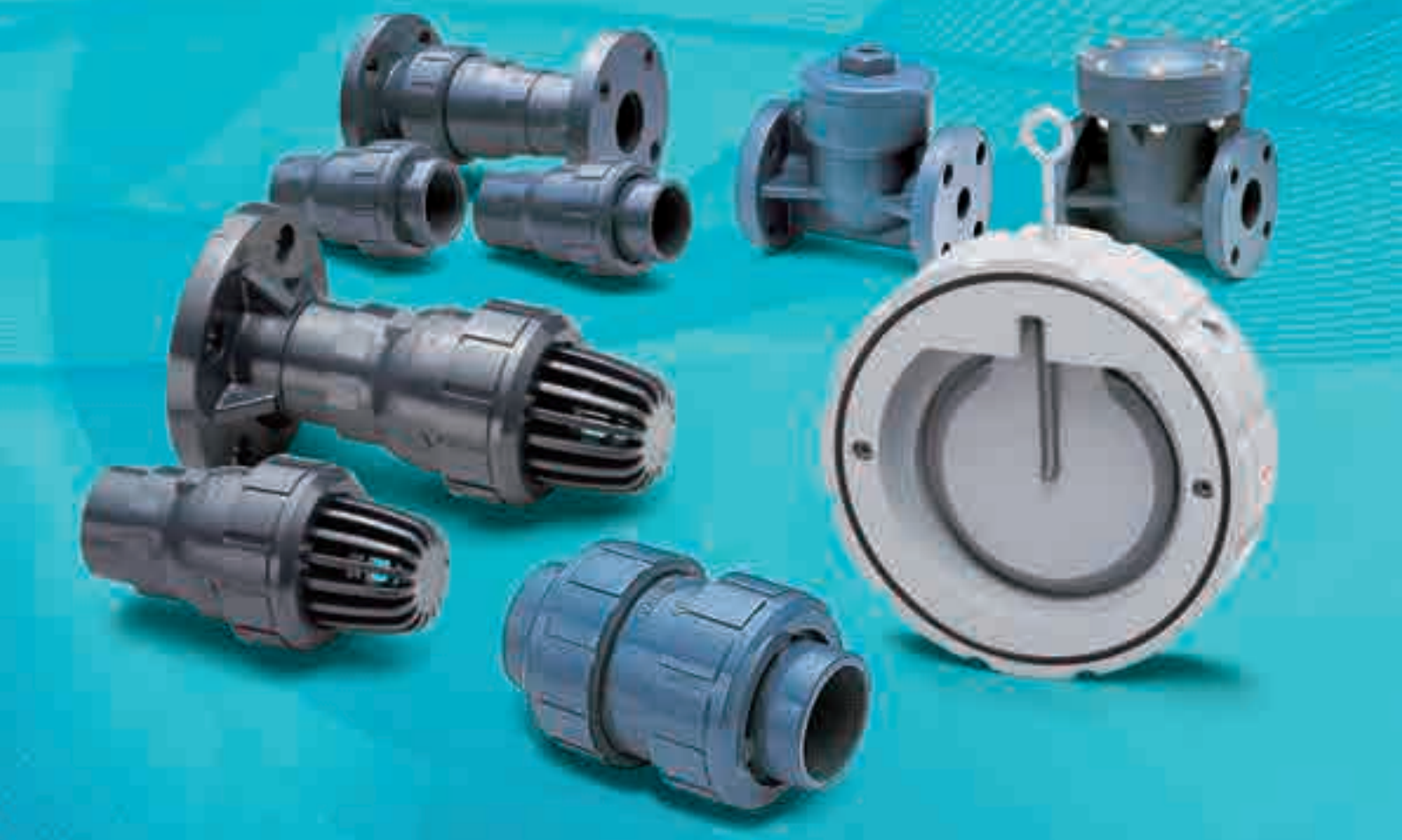

PERFORMANCE OF SWING CHECK VALVE, BALL CHECK VALVE, AND BALL FOOT VALVE

Min. Pressure Unit : MPa{kgf/cm^2}, Normal Temperature

mm	inch		SWING CHECK VALVE				BALL CHECK VALVE, BALL FOOT VALVE			
			VERTICAL PIPING		HORIZONTAL PIPING		VERTICAL PIPING		HORIZONTAL PIPING	
			WHEN FULLY SEALED	WHEN AIR PASSES	WHEN FULLY SEALED	WHEN AIR PASSES	WHEN FULLY SEALED	WHEN AIR PASSES	WHEN FULLY SEALED	WHEN AIR PASSES
15	1/2	EPDM	0.02{0.2}	0.01{0.1}	0.02{0.2}	0.01{0.1}	0.02{0.2}	0.005{0.05}	0.02{0.2}	0.001{0.01}
		PTFE	0.03{0.3}	0.01{0.1}	0.03{0.3}	0.01{0.1}	-	-	-	-
20	3/4	EPDM	0.02{0.2}	0.01{0.1}	0.02{0.2}	0.01{0.1}	0.03{0.3}	0.005{0.05}	0.03{0.3}	0.001{0.01}
		PTFE	0.035{0.35}	0.01{0.1}	0.035{0.35}	0.01{0.1}	-	-	-	-
25	1	EPDM	0.03{0.3}	0.01{0.1}	0.035{0.35}	0.01{0.1}	0.03{0.3}	0.005{0.05}	0.03{0.3}	0.001{0.01}
		PTFE	0.05{0.5}	0.01{0.1}	0.06{0.6}	0.01{0.1}	-	-	-	-
40	1 1/2	EPDM	0.03{0.3}	0.01{0.1}	0.035{0.35}	0.01{0.1}	0.03{0.3}	0.01{0.1}	0.03{0.3}	0.002{0.02}
		PTFE	0.05{0.5}	0.01{0.1}	0.06{0.6}	0.01{0.1}	-	-	-	-
50	2	EPDM	0.03{0.3}	0.01{0.1}	0.035{0.35}	0.01{0.1}	0.03{0.3}	0.01{0.1}	0.03{0.3}	0.002{0.02}
		PTFE	0.05{0.5}	0.01{0.1}	0.06{0.6}	0.01{0.1}	-	-	-	-
65	2 1/2	EPDM	0.03{0.3}	0.01{0.1}	0.035{0.35}	0.01{0.1}	-	-	-	-
		PTFE	0.05{0.5}	0.01{0.1}	0.06{0.6}	0.01{0.1}	-	-	-	-
80	3	EPDM	0.035{0.35}	0.01{0.1}	0.04{0.4}	0.01{0.1}	0.02{0.2}	0.01{0.1}	0.02{0.2}	0.002{0.02}
		PTFE	0.055{0.55}	0.01{0.1}	0.06{0.6}	0.01{0.1}	-	-	-	-
100	4	EPDM	0.035{0.35}	0.01{0.1}	0.04{0.4}	0.01{0.1}	0.02{0.2}	0.01{0.1}	0.02{0.2}	0.002{0.02}
		PTFE	0.06{0.6}	0.01{0.1}	0.065{0.65}	0.01{0.1}	-	-	-	-
125	5	EPDM	0.035{0.35}	0.01{0.1}	0.04{0.4}	0.01{0.1}	-	-	-	-
		PTFE	0.06{0.6}	0.01{0.1}	0.065{0.65}	0.01{0.1}	-	-	-	-
150	6	EPDM	0.04{0.4}	0.015{0.15}	0.045{0.45}	0.01{0.1}	-	-	-	-
		PTFE	0.065{0.65}	0.015{0.15}	0.07{0.7}	0.01{0.1}	-	-	-	-
200	8	EPDM	0.04{0.4}	0.02{0.2}	0.045{0.45}	0.015{0.15}	-	-	-	-
		PTFE	0.07{0.7}	0.02{0.2}	0.07{0.7}	0.015{0.15}	-	-	-	-

TEST METHOD [Vertical piping]

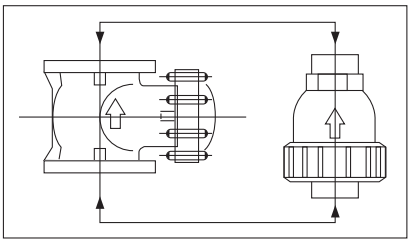

Measure the minimum pressure required for air to pass through or to be sealed.

[Horizontal piping]

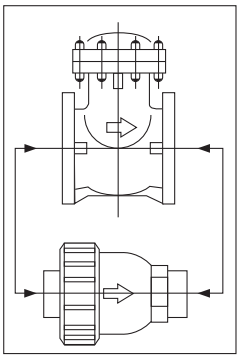

PERFORMANCE OF WAFER CHECK VALVE

Min. Sealing Pressure & Operating Pressure (Hydraulic Pressure) Unit : MPa{kgf/cm^2}

mm	inch	STANDARD MODEL				SPRING MODEL			
		VERTICAL PIPING		HORIZONTAL PIPING		VERTICAL PIPING		HORIZONTAL PIPING	
		MIN. SEALING PRESSURE	OPERATING PRESSURE	MIN. SEALING PRESSURE	OPERATING PRESSURE	MIN. SEALING PRESSURE	OPERATING PRESSURE	MIN. SEALING PRESSURE	OPERATING PRESSURE
80	3	0.021 {0.21}	0.0007 {0.007}	0.021 {0.21}	0.00007 {0.0007}	0.021 {0.21}	0.0014 {0.014}	0.021 {0.21}	0.00007 {0.0007}
100-300	4-12	0.007 {0.07}	0.0007 {0.007}	0.007 {0.07}	0.00007 {0.0007}	0.007 {0.07}	0.0014 {0.014}	0.007 {0.07}	0.00007 {0.0007}

TEST METHOD [Vertical piping]

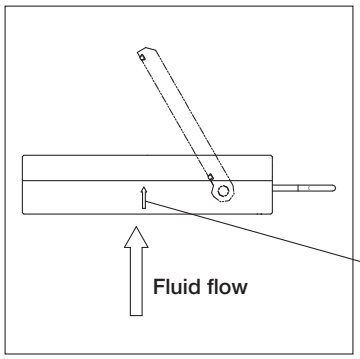

[Horizontal piping]

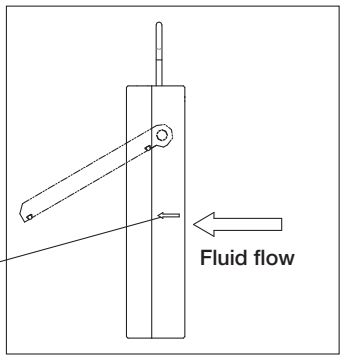

SWING CHECK VALVE

- PREVENTS FLUID BACKFLOW AND PROTECTS PUMP FACILITIES
- ARM-TYPE CHECK VALVE PREVENTS FLUID RESISTANCE INCREASE.
- ALL-PLASTIC MATERIAL PROVIDES HIGH RESISTANCE TO CORROSIVE FLUID INCLUDING ACID AND ALKALI.
- INTERNAL MAINTENANCE ONLY REQUIRES REMOVAL OF BONNET.

BASIC SPECIFICATIONS

VALVE TYPE——**SWING CHECK VALVE**

SIZE——**15 mm—200 mm (1/2 inch—8 inch)**

BODY MATERIAL——HI-PVC / PP / PVDF

SEAL MATERIAL / SEAT——EPDM / FKM / PTFE / Viflon®F FKM-F / Viflon®C FKM-C

CONNECTION / FLANGED—**JIS5K, JIS10K, DIN, ANSI**

HIGH PURITY SERIES——**LUBRICANT FREE**

	FLUID TEMPERATURE	MAXIMUM WORKING PRESSURE (NORMAL TEMPERATURE) MPa{kgf/cm²}		
		15mm—80mm	100mm—150mm	200mm
HI-PVC	0℃ ~ 50℃	1.0 {10.2}	0.7 {7.1}	0.5 {5.1}
PP	-20℃ ~ 80℃	1.0 {10.2}	0.7 {7.1}	0.5 {5.1}
PVDF	-20℃ ~100℃	1.0 {10.2}	0.7 {7.1}	0.5 {5.1}

NOTE The maximum working pressure is the value including the water hammer pressure. Be careful that the maximum working pressure is not exceeded during use.

* Concerning the allowable pressure for each temperature and material, see the technical documents at the end of this catalog.

MANUAL

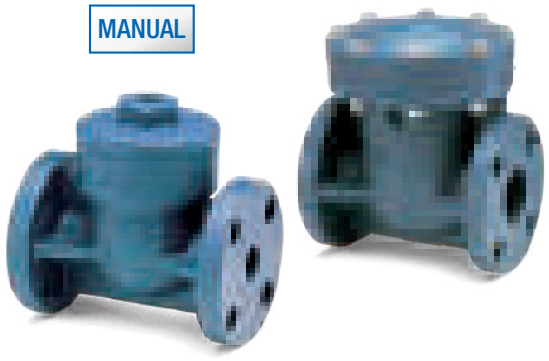

NOTES FOR PIPING

- They can be used for both horizontal and vertical pipes, but make sure during installation that the arrow direction of the valve body is aligned with the flow direction of the fluid.

NOTES FOR USE

- If foreign matter such as dust is mixed in the fluid, the valve may not function properly.
- The plug (P/N ④) is not a drain plug for water removal. Do not remove the plug to discharge water since the valve may become unable to work properly.

PARTS LIST MANUAL

HI-PVC, PVDF

15 mm, 20 mm

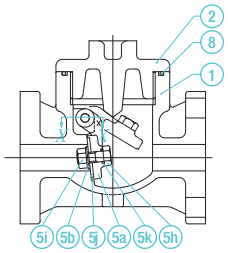

25 mm — 200 mm

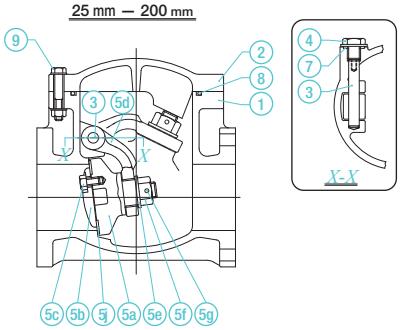

PART NO. / NAME	QTY	MATERIAL
① BODY	1	HI-PVC, PVDF
② BONNET	1	HI-PVC, PVDF
③ SHAFT	1	HI-PVC, PVDF
④ PLUG	1	HI-PVC, PVDF
5a DISC	1	HI-PVC, PVDF
5b SEAT HOLDER	1	HI-PVC, PVDF
5c BOLT (A)(4)	—	HI-PVC, PVDF
5d ARM(4)	1	HI-PVC, PVDF
5e WASHER(4)	1	HI-PVC, PVDF

PART NO. / NAME	QTY	MATERIAL
5f NUT (A)(4)	1	HI-PVC, PVDF
5g PIN(3)	1	HI-PVC, PVDF
5h BOLT (B)(1)	1	HI-PVC, PVDF
5i NUT (B)(1)	1	HI-PVC, PVDF
5j SEAT	1	GASKET SEAT O-RING (A) —O-RING (B) EPDM——EPDM FKM——FKM PTFE——PFA(2)
5k O-RING (A)(1)	1	
7 GASKET (B)	1	
8 O-RING (B)	1	
9 BOLT/NUT(4)	—	SUS304

NOTES (1) Used for 15 mm and 20 mm. (2) FKM + PFA coating.
(3) Used for the material of PVDF and sizes of 65 to 200 mm.
(4) Used for 25 to 200 mm.

PP

15 mm, 20 mm

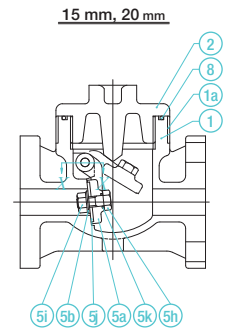

25 mm — 200 mm

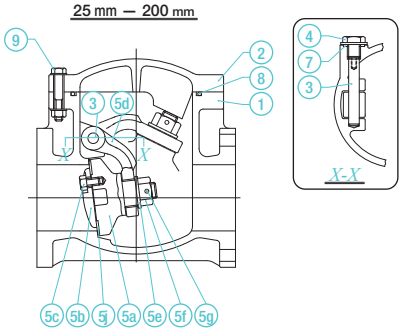

PART NO. / NAME	QTY	MATERIAL
① BODY	1	PP
② BONNET	1	PP
③ SHAFT	1	PP
④ PLUG	1	PP
5a DISC	1	PVDF
5b SEAT HOLDER	1	PP
5c BOLT (A)(3)	—	PP
5d ARM(3)	1	PP
5e WASHER(3)	1	PP
5f NUT (A)(3)	1	PVDF

PART NO. / NAME	QTY	MATERIAL
5g PIN(2)	1	PVDF
5h BOLT (B)(1)	1	PP
5i NUT (B)(1)	1	PP
5j SEAT	1	GASKET SEAT O-RING (A) —O-RING (B) EPDM——EPDM FKM——FKM
5k O-RING (A)(1)	1	
7 GASKET (B)	1	
8 O-RING (B)	1	
9 BOLT/NUT(3)	—	SUS304
1a BODY RING(1)	1	SUS304

NOTES (1) Used for 15 mm and 20 mm. (2) Used for 65 to 200 mm.
(3) Used for 25 to 200 mm.

PRODUCT MODEL CODE LIST

MANUAL

ACTUATION	TYPE	BONNET SEAL	BODY MATERIAL	SEAL MATERIAL	CONNECTION	STANDARD	SIZE	HIGH PURITY SERIES
V	SC	OR*	*	*	F	*	***	1
V MANUAL VALVE	SC SWING	OR O-RING	I HI-PVC P PP F PVDF	E EPDM V FKM P PTFE/PFA 3 PTFE/Viflon®-F 4 PTFE/Viflon®-C	F FLANGED	1 JIS10K 5 JIS5K D DIN A ANSI	015 15mm ~ 200 200mm	1 LUBRICANT FREE

* When the seal material is EPDM or FKM, the material of O-ring is the same as that of the seal.
When the seal material is PTFE, the material of O-ring is PFA coating or Viflon®.

NOTES • 15 mm type is processed from 20 mm. 32 mm type is processed from 40 mm.

• Contact us regarding the combination of body material PP and seal material PTFE/PFA.

MANUAL

SWING CHECK VALVE

TYPE——VSCOR

CONNECTION / FLANGED——JIS, DIN, ANSI

HI-PVC, PVDF

15 mm, 20 mm

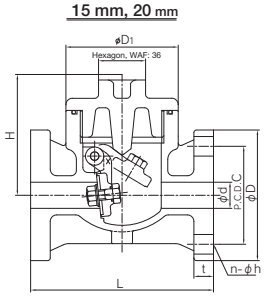

25 mm – 200 mm

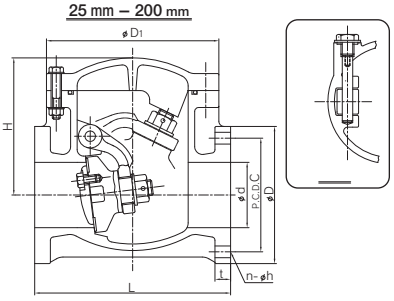

PP

15 mm, 20 mm

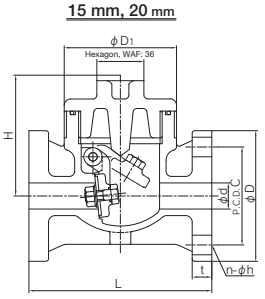

25 mm – 200 mm

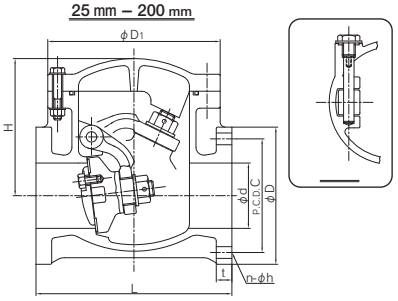

■ JIS, DIN (Unit: mm)

mm	d	D1	H	L	t			JIS5K				JIS10K				DIN PN10			
					HI-PVC	PVDF	PP	D	C	n	h	D	C	n	h	D	C	n	h
15	20	86	87	140	15	15	15	80	60	4	12	95	70	4	15	95	65	4	14
20	20	86	87	140	15	15	15	85	65	4	12	100	75	4	15	105	75	4	14
25	25	130	117	160	16	16	16	95	75	4	12	125	90	4	19	115	85	4	14
32	40	145	135	180	18	18	17	-	-	-	-	135	100	4	19	140	100	4	18
40	40	145	135	180	18	18	17	120	95	4	15	140	105	4	19	150	110	4	18
50	50	180	161	200	20	20	20	130	105	4	15	155	120	4	19	165	125	4	18
65	65	200	165	240	22	23	22	155	130	4	15	175	140	4	19	185	145	4	18
80	80	205	168	260	22	23	22	180	145	4	19	185	150	8	19	200	160	8	18
100	100	265	210	300	24	26	24	200	165	8	19	210	175	8	19	220	180	8	18
125	125	330	245	350	24	26	25	235	200	8	19	250	210	8	23	250	210	8	18
150	150	370	280	400	25	27	26	265	230	8	19	280	240	8	23	285	240	8	22
200	200	425	333	500	30	33	31	320	280	8	23	330	290	12	23	340	295	8	22

■ ANSI (Unit: inch)

inch	mm	d	D1	H	L	t			ANSI Class150			
						HI-PVC	PVDF	PP	D	C	n	h
1/2	15	0.79	3.39	3.43	5.51	0.59	0.59	0.59	3.50	2.38	4	0.62
3/4	20	0.79	3.39	3.43	5.51	0.59	0.59	0.59	3.88	2.75	4	0.62
1	25	0.98	5.12	4.61	6.30	0.63	0.63	0.63	4.25	3.12	4	0.62
1 1/4	32	-	-	-	-	-	-	-	-	-	-	-
1 1/2	40	1.57	5.71	5.31	7.09	0.71	0.71	0.67	5.00	3.88	4	0.62
2	50	1.97	7.09	6.34	7.87	0.79	0.79	0.79	6.00	4.75	4	0.75
2 1/2	65	2.56	7.87	6.50	9.45	0.87	0.91	0.87	7.00	5.50	4	0.75
3	80	3.15	8.07	6.61	10.24	0.87	0.91	0.87	7.50	6.00	4	0.75
4	100	3.94	10.43	8.27	11.81	0.94	1.02	0.94	9.00	7.50	8	0.75
5	125	4.92	12.99	9.65	13.78	0.94	1.02	0.98	10.00	8.50	8	0.88
6	150	5.91	14.57	11.02	15.75	0.98	1.06	1.02	11.00	9.50	8	0.88
8	200	7.87	16.73	13.11	19.69	1.18	1.30	1.22	13.50	11.75	8	0.88

WAFER CHECK VALVE

- STRENGTH CONCERNS OF PLASTIC WAFER CHECK ARE RESOLVED USING STRESS ANALYSIS.
- CORROSION RESISTANCE IS IMPROVED BY ALL-PLASTIC WETTED PART AND COATED SPRING.
- WEIGHT IS 1/3 TO 1/5 OF THAT OF METAL TYPE.
- STOPPER-INTEGRATED STRUCTURE ELIMINATES THE USE OF GASKET DURING PIPING, ALLOWING COST REDUCTION.

BASIC SPECIFICATIONS

VALVE TYPE — **WAFER CHECK VALVE**
SIZE — **80 mm—300 mm (3 inch—12 inch)**
BODY MATERIAL — **U-PVC**
SEAL MATERIAL / O-RING — **EPDM** **FKM**
CONNECTION / WAFER — **JIS10K, DIN, ANSI**
OPTION — **SPRING RETURN** **WITH DRAIN PLUG**

	FLUID TEMPERATURE	MAXIMUM WORKING PRESSURE (NORMAL TEMPERATURE) MPa{kgf/cm²}	
		80mm—200mm	250mm, 300mm
U-PVC	0℃ ~ 50℃	1.0 {10.2}	0.6 {6.1}

NOTES The maximum working pressure is the value including the water hammer pressure. Be careful that the maximum working pressure is not exceeded during use.
* Concerning the allowable pressure for each temperature and material, see the technical documents at the end of this catalog.

MANUAL



NOTES FOR USE

- The maximum working pressure is the value including the water hammer pressure. Be careful that the maximum working pressure is not exceeded during use.
- The wafer check valve is most suited for water and sea water lines. When it is used for a chemical line, contact us to check the chemical resistance.
- They can be used for both horizontal and vertical pipes, but make sure during installation that the arrow direction of the valve body is aligned with the flow direction of the fluid.

PARTS LIST MANUAL

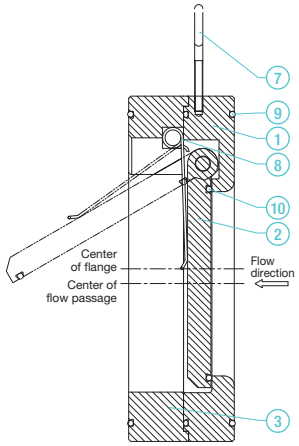

80 mm (3”), 100 mm (4”), 200 mm (8”)

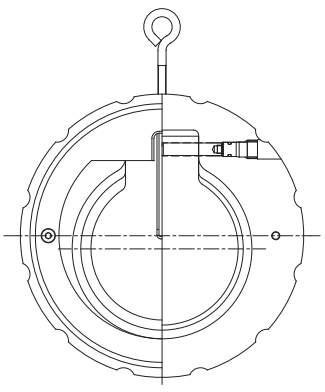

125 mm (5”), 150 mm (6”), 250 mm (10”), 300 mm (12”)

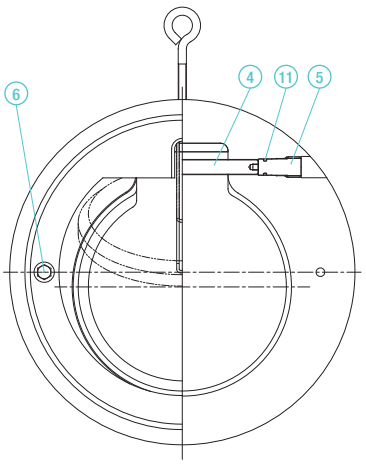

PART NO. / NAME	QTY	MATERIAL
① BODY	1	U-PVC
② DISC	1	U-PVC
③ STOPPER	1	U-PVC
④ SHAFT	1	U-PVC

PART NO. / NAME	QTY	MATERIAL
⑤ PLUG	1	U-PVC
⑥ BOLT	2	U-PVC
⑦ EYE BOLT	1	SS400 (Unichrome plating)
⑧ SPRING(1)	1	SWP-B (ETFE COATING)

PART NO. / NAME	QTY	MATERIAL
⑨ O-RING (A)	3	EPDM, FKM
⑩ O-RING (B)	1	EPDM, FKM
⑪ O-RING (C)	1	EPDM, FKM

NOTE (1) Not used for standard type.

PRODUCT MODEL CODE LIST

MANUAL

ACTUATION	TYPE	OPERATING SYSTEM	BODY MATERIAL	SEAL MATERIAL	CONNECTION	STANDARD	SIZE	OPTION
V	WC	ZZ	U	*	W	*	***	***
V MANUAL VALVE	WC WAFER CHECK	ZZ NONE	U U-PVC	E EPDM V FKM	W WAFER	D DIN A ANSI 1 JIS10K	080 80mm ~ 300 300mm	- STANDARD 067 SPRING RETURN 0ZZ WITH DRAIN PLUG

MANUAL

WAFER CHECK VALVE

TYPE——VWCZZ

CONNECTION / WAFER——JIS, ANSI, DIN

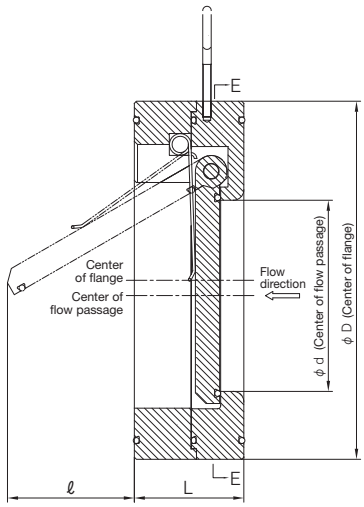

80 mm (3”), 100 mm (4”), 200 mm (8”)

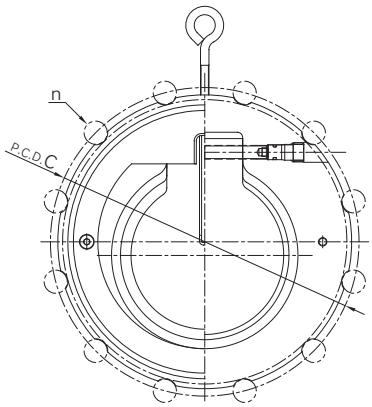

125 mm (5”), 150 mm (6”), 250 mm (10”), 300 mm (12”)

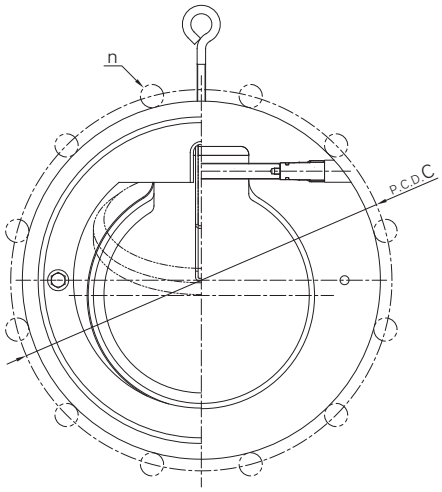

■ JIS, DIN (Unit: mm)

					JIS10K		DIN PN10	
mm	d	D	L	ℓ	C	n	C	n
80	47	144	63	22.6	150	8	160	8
100	52	175	70	34.9	175	8	180	8
125	77	190	76	50.9	210	8	210	8
150	92	220	82	64.8	240	8	240	8
200	132	279	101	93.6	290	12	295	8
250	177	333	114	129	355	12	350	12
300	217	378	115	165.6	400	16	400	12

■ ANSI (Unit: inch)

						ANSI Class150	
inch	mm	d	D	L	ℓ	C	n
3	80	1.85	5.67	2.48	0.89	6.00	4
4	100	2.05	6.89	2.76	1.37	7.50	8
5	125	3.03	7.48	2.99	2.00	8.50	8
6	150	3.62	8.66	3.23	2.55	9.51	8
8	200	5.20	10.98	3.98	3.69	11.75	8
10	250	6.97	13.11	4.49	5.08	14.25	12
12	300	8.54	14.88	4.53	6.52	17.01	12

BALL CHECK VALVE

- PLASTIC VALVE WITH HIGH RESISTANCE TO BOTH INTERNAL AND EXTERNAL CORROSION CAUSED BY SEA WATER, VARIOUS ACIDS AND ALKALIS AND OTHER CHEMICALS.
- FLOW PASSAGE STRUCTURE WITH LOW FLUID RESISTANCE
- SMALL PARTS QUANTITY AND A SINGLE CONNECTION REDUCE EXTERNAL STRESS EFFECTS, ALLOWING HIGH FINISHING ACCURACY.
- LIGHTWEIGHT AND SMALL SIZE ALLOW INSTALLATION IN NARROW SPACES AND FACILITATE DISASSEMBLED CLEANING.

MANUAL

BASIC SPECIFICATIONS

VALVE TYPE — **BALL CHECK VALVE**
SIZE — **15 mm—100 mm (1/2 inch—4 inch)**
BODY MATERIAL — **U-PVC** **C-PVC** **PP** **PVDF**
SEAL MATERIAL / SEAT — **EPDM** **FKM** **etc.**
CONNECTION / FLANGED — **JIS5K, JIS10K, DIN, ANSI**
SOCKET — **JIS, DIN, ANSI**
THREADED — **Rc, Rp, NPT**
HIGH PURITY SERIES — **LUBRICANT FREE**

	FLUID TEMPERATURE	MAXIMUM WORKING PRESSURE (NORMAL TEMPERATURE) MPa{kgf/cm²}		CONNECTION METHOD		
		15 mm—50 mm	80mm—100mm	FLANGED	SOCKET	THREADED
U-PVC	0℃ ~ 50℃	1.0 {10.2}	0.7 {7.1}	○	○	○
C-PVC	0℃ ~ 90℃	1.0 {10.2}	0.7 {7.1}	○	○	○
PP	-20℃ ~ 80℃	1.0 {10.2}	0.5 {5.1}	—	○	○
PVDF	-20℃ ~100℃	1.0 {10.2}	0.7 {7.1}	—	○	○

NOTES The maximum working pressure is the value including the water hammer pressure. Be careful that the maximum working pressure is not exceeded during use.
* Concerning the allowable pressure for each temperature and material, see the technical documents at the end of this catalog. * For flanged type 15 - 50 mm with the body material of PP or PVDF, true union ball check valves can be used. For details, contact our sales office.



NOTES FOR USE

- Make sure during piping that the arrow direction of the valve body is aligned with the flow direction of the fluid.
- Do not use the valve in a line where the fluid flow is very turbulent. Oscillation of the ball may occur in the valve, causing breakage.
- Near pumps with unstable flow, use AV swing check valves.

PARTS LIST MANUAL

FLANGED

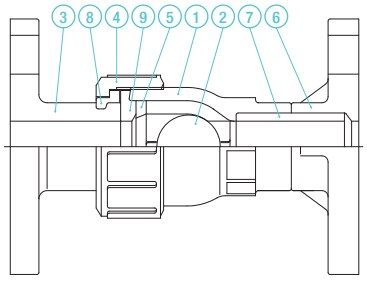

SOCKET

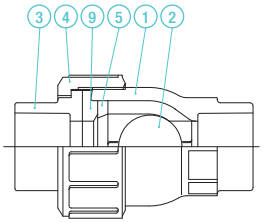

THREADED

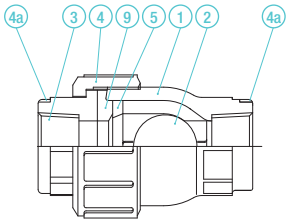

PART NO. / NAME	QTY	MATERIAL
① BODY	1	
② BALL	1	FLANGED U-PVC, C-PVC
③ END CONNECTOR	1	
④ UNION NUT	1	SOCKET U-PVC, C-PVC, PP, PVDF
⑤ STOP RING (A)	1	
⑥ TS FLANGE(2)	1	THREADED U-PVC, C-PVC, PP, PVDF
⑦ PIPE(2)	1	

PART NO. / NAME	QTY	MATERIAL
⑧ STOP RING (B)(2)	1	PVDF
⑨ SEAT	1	EPDM, FKM, etc.
④a RING(1)	2	SUS304

NOTES (1) Used for 15 to 25 mm for C-PVC threaded type. (2) Used for flanged type.

PRODUCT MODEL CODE LIST

MANUAL

ACTUATION	TYPE	OPERATING SYSTEM	BODY MATERIAL	SEAL MATERIAL	CONNECTION	STANDARD	SIZE	HIGH PURITY SERIES
V	BC	ZZ	*	*	*	*	***	1
V MANUAL VALVE	BC BALL CHECK	ZZ NONE	U U-PVC C C-PVC P PP F PVDF	E EPDM V FKM	S SOCKET N THREADED F FLANGED P SPIGOT	J JIS 1 JIS10K 5 JIS5K D DIN A ANSI	015 15mm ~ 100 100mm	1 LUBRICANT FREE

NOTES
- PP and PVDF socket types are weld type.
- PVDF socket type compatible with the JIS standard is not available.
- For 32 mm and 65 mm flanged types, individual service may be available. Contact us for more details.
- PP and PVDF flanged types are not produced.

MANUAL

BALL CHECK VALVE

TYPE——VBCZZ

CONNECTION / FLANGED, SOCKET, THREADED——JIS, DIN, ANSI SPIGOT——DIN

FLANGED

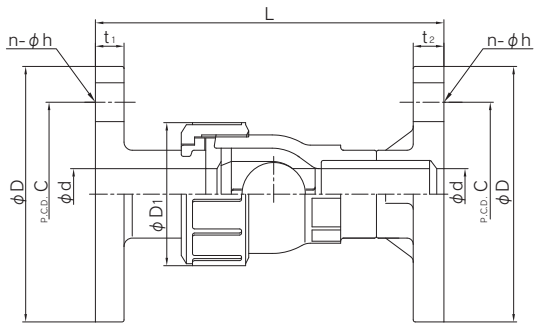

SOCKET

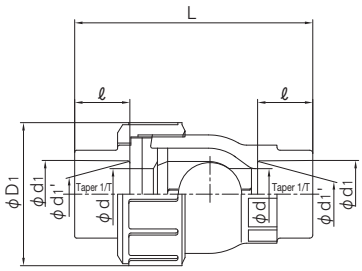

THREADED

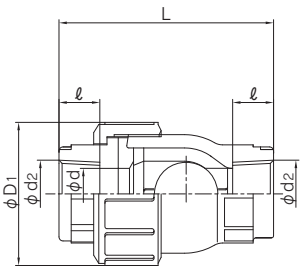

■ JIS (Unit: mm)

			FLANGED													SOCKET								THREADED			
			JIS5K						JIS10K							U-PVC C-PVC				PP				JIS B 0203	L	
mm	d	D1	D	C	n	h	t2 U-PVC	t2 C-PVC	D	C	n	h	t2 U-PVC	t2 C-PVC	L	t1	d1	ℓ	1/T	L	d1	d2	ℓ	L	d2	ℓ	U-PVC C-PVC	PP PVDF
15	15	48	80	60	4	12	9	9	95	70	4	15	14	14	131	12	22.11	20	1/34	89	21.2	20.2	22	93	Rc 1/2	15	80	78
20	20	60	85	65	4	12	10	10	100	75	4	15	15	14	156	14	26.13	24	1/34	106	26.2	25.2	23	104	Rc 3/4	17	95	92
25	25	70	95	75	4	12	10	10	125	90	4	19	15	16	169	14	32.16	27	1/34	117	33.0	32.0	25	113	Rc 1	20	105	102
40	40	96	120	95	4	15	12	12	140	105	4	19	16	16	214	16	48.21	37	1/37	162	47.0	46.0	28	144	Rc 1 1/2	25	141	137
50	51	106	130	105	4	15	14	14	155	120	4	19	20	20	244	16	60.25	42	1/37	189	59.0	58.0	28	162	Rc 2	28	164	160
80	78	152	180	145	4	19	14	-	185	150	8	19	22	22	310	18	89.60	64	1/49	277	88.0	86.0	35	219	Rc 3	35	222	216
100	100	210	200	165	8	19	16	-	210	175	8	19	22	22	397	18	114.70	84	1/56	376	113.0	111.0	45	298	Rc 4	45	308	301

■ DIN (Unit: mm)

			SOCKET						THREADED				SPIGOT				
			U-PVC C-PVC			PP PVDF			DIN 2999				DIN 3442				
			DIN 8063			DIN 16962					L			t1			
mm	d	D1	d1	ℓ	L	d1	d1'	ℓ	L	d2	ℓ	U-PVC C-PVC	PP PVDF	d3	PP	PVDF	ℓ	L
15	15	48	20	16	81	19.50	19.30	14	78	Rp 1/2	15	80	78	20	2.5	1.9	19.0	100
20	20	60	25	19	96	24.50	24.30	16	90	Rp 3/4	17	95	92	25	2.7	1.9	19.0	110
25	25	70	32	22	107	31.50	31.30	18	99	Rp 1	20	105	102	32	3.0	2.4	19.0	116
40	40	96	50	31	150	49.45	49.20	23	135	Rp 1 1/2	25	141	137	50	4.6	2.9	19.0	142
50	51	106	63	38	181	62.50	62.10	27	160	Rp 2	28	164	160	63	5.8	3.0	19.0	157
80	78	152	90	51	248	89.20	88.85	35	217	Rp 3	35	222	216	90	8.2	4.3	38.0	256
100	100	210	110	61	330	109.05	108.65	41	291	Rp 4	45	308	301	110	10.0	5.3	44.5	333

■ ANSI (Unit: inch)

				FLANGED							SOCKET								THREADED			
				ANSI CLASS 150							U-PVC C-PVC ASTM SCH40				PVDF PP				ANSI/ASME B 1.20.1		L	
inch	mm	d	D1	D	C	n	h	L	t1	t2	d1	d1'	ℓ	L	d1	d1'	ℓ	L	d2	ℓ	U-PVC C-PVC	PP PVDF
1/2	15	0.59	1.89	3.50	2.38	4	0.62	5.16	0.47	0.55	0.848	0.836	0.688	3.35	0.825	-	0.874	3.82	1/2-14NPT	0.59	3.15	3.07
3/4	20	0.79	2.36	3.86	2.75	4	0.62	6.14	0.55	0.59	1.058	1.046	0.719	3.74	1.030	-	1.000	4.41	3/4-14NPT	0.67	3.74	3.62
1	25	0.98	2.79	4.25	3.12	4	0.62	6.65	0.55	0.59	1.325	1.310	0.875	4.33	1.300	-	1.126	4.88	1-11 1/2 NPT	0.79	4.13	4.02
1 1/2	40	1.57	3.78	5.00	3.88	4	0.62	8.43	0.63	0.63	1.912	1.894	1.094	5.71	1.890	-	1.374	5.79	1 1/2-11 1/2NPT	0.98	5.55	5.39
2	50	2.01	4.17	6.00	4.75	4	0.75	9.61	0.63	0.79	2.387	2.369	1.156	6.50	2.360	-	1.500	6.89	2-11 1/2 NPT	1.10	6.46	6.30
3	80	3.07	5.98	7.50	6.00	4	0.75	12.20	0.71	0.87	3.516	3.492	1.875	9.57	3.480	-	1.874	9.57	3-8NPT	1.38	8.74	8.50
4	100	3.94	8.27	9.00	7.50	8	0.75	15.63	0.71	0.87	4.518	4.491	2.000	12.20	4.480	-	2.252	12.68	4-8NPT	1.77	12.13	11.85

TRUE UNION BALL CHECK VALVE

- THE VALVE PARTS CAN BE REMOVED WITHOUT DISCONNECTING THE PIPES, BY LOOSENING THE UNIONS ON BOTH SIDES

BASIC SPECIFICATIONS

VALVE TYPE — **TRUE UNION BALL CHECK VALVE**

SIZE — **15 mm—50 mm (1/2 inch—2 inch)**

BODY MATERIAL — **U-PVC** **C-PVC** **PP** **PVDF**

SEAL MATERIAL / SEAT — **EPDM** **FKM** **etc.**

CONNECTION / FLANGED — **JIS5K,JIS10K,DIN, ANSI**

SOCKET — **JIS,DIN, ANSI**

THREADED — **Rc,Rp, NPT**

SPIGOT — **DIN**

	FLUID TEMPERATURE	MAXIMUM WORKING PRESSURE (NORMAL TEMPERATURE) MPa{kgf/cm²}	CONNECTION METHOD		
			FLANGED	SOCKET	THREADED
PVDF	-20℃～100℃	1.0 {10.2}	○	○	○
PP	-20℃～ 80℃	1.0 {10.2}	○	○	○

NOTES The maximum working pressure is the value including the water hammer pressure. Be careful that the maximum working pressure is not exceeded during use.
* Concerning the allowable pressure for each temperature and material, see the technical documents at the end of this catalog.

MANUAL



PARTS LIST MANUAL

FLANGED

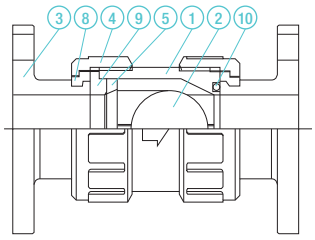

SOCKET

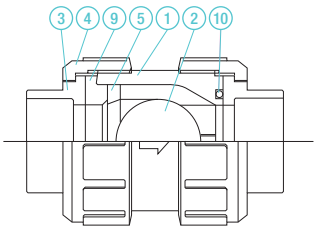

THREADED

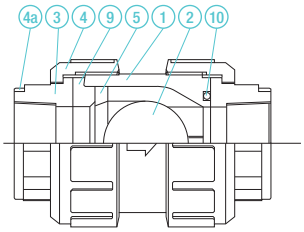

SPIGOT

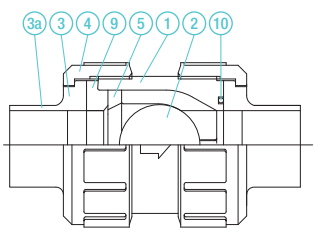

PART NO. / NAME	QTY	MATERIAL
① BODY	1	
② BALL	1	
③ END CONNECTOR	2	U-PVC, C-PVC, PP, PVDF
④ UNION NUT	2	
⑤ STOP RING (A)	1	

PART NO. / NAME	QTY	MATERIAL
⑧ STOP RING (B)(2)	2	PVDF
⑨ SEAT	1	EPDM, FKM, etc.
⑩ O-RING	1	EPDM, FKM, etc.
④a RING (1)	2	SUS304

NOTES (1) Used for 15 to 25 mm for C-PVC threaded type. (2) Used for flanged type.

PRODUCT MODEL CODE LIST

MANUAL

ACTUATION	TYPE	OPERATING SYSTEM	BODY MATERIAL	SEAL MATERIAL	CONNECTION	STANDARD	SIZE
V	TC	ZZ	*	*	*	*	***
V MANUAL VALVE	TC TRUE UNION BALL CHECK	ZZ NONE	U U-PVC C C-PVC P PP F PVDF	E EPDM V FKM	S SOCKET N THREADED F FLANGED P SPIGOT	D DIN A ANSI	015 15mm ~ 050 50mm

MANUAL

TRUE UNION BALL CHECK VALVE

TYPE——VTCZZ

CONNECTION / FLANGED, SOCKET, THREADED, SPIGOT——DIN

FLANGED

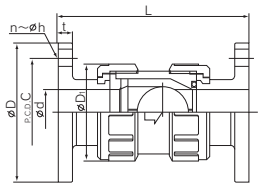

SOCKET

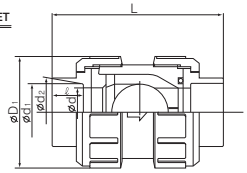

THREADED

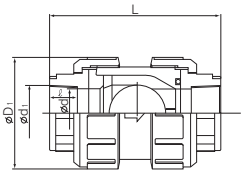

SPIGOT

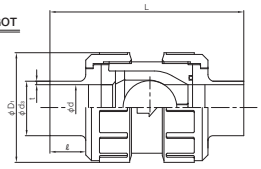

■ JIS (Unit: mm)

mm	d	D1	FLANGED JIS5K D	C	n	h	JIS10K D	C	n	h	L U-PVC C-PVC	L PP PVDF	t	SOCKET U-PVC C-PVC d1	ℓ	1/T	L	PP d1	d1'	ℓ	L	THREADED d2	ℓ	L U-PVC C-PVC	L PP PVDF
15	15	48	80	60	4	12	95	70	4	15	130	128	12	22.11	20	1/34	92	21.2	20.2	22	94	Rc 1/2	15	86	83
20	20	60	85	65	4	12	100	75	4	15	155	154	14	26.13	24	1/34	110	26.2	25.2	23	107	Rc 4/3	17	103	98
25	25	70	95	75	4	12	125	90	4	19	165	163	14	32.16	27	1/34	123	33.0	32.0	25	117	Rc 1	20	113	109
40	40	96	120	95	4	15	140	105	4	19	192	190	16	48.21	37	1/37	170	47.0	46.0	28	151	Rc 1 1/2	25	151	147
50	51	106	130	105	4	15	155	120	4	19	214	211	16	60.25	42	1/37	199	59.0	58.0	28	168	Rc 2	28	177	171

■ DIN (Unit: mm)

mm	d	D1	FLANGED DIN PN10 D	C	n	h	L U-PVC C-PVC	L PP	t	SOCKET U-PVC C-PVC DIN 8063 d1	ℓ	L	PVDF PP DIN 16962 d1	d2	ℓ	L
15	15	48	95	65	4	14	130	128	12	20	16	84	19.50	19.30	14	79
20	20	60	105	75	4	14	155	154	14	25	19	100	24.50	24.30	16	93
25	25	70	115	85	4	14	165	163	14	32	22	113	31.50	31.30	18	103
40	40	96	150	110	4	18	192	190	16	50	31	158	49.45	49.20	23	141
50	51	106	165	125	4	18	214	211	16	63	38	190	62.50	62.10	27	167

mm	SPIGOT d3	DIN 3442 U-PVC t	ℓ	L	PP t	ℓ	L	PVDF t	ℓ	L	THREADED DIN 2999 d1	ℓ	L U-PVC C-PVC	L PVDF PP
15	20	2.5	16	113	2.5	19	102	1.9	19	102	Rp 1/2	15	86	83
20	25	2.5	18.5	127	2.7	19	110	1.9	19	110	Rp 3/4	17	103	98
25	32	3.5	22	132	3	19	118	2.4	19	118	Rp 1	20	113	109
40	50	5	31	174	4.6	19	145	2.9	19	145	Rp 1 1/2	25	151	147
50	63	6.5	37.5	204	5.8	19	164	3	19	164	Rp 2	28	177	171

ANSI (Unit: inch)

inch	mm	d	D1	FLANGED ANSI Class 150 D	C	n	h	L U-PVC C-PVC	L PP	t1	SOCKET U-PVC C-PVC ASTM SCH40 d1	d2	ℓ	L	PVDF PP d1	d1'	ℓ	L	THREADED ANSI/ASME B 1.20.1 d1	ℓ	L U-PVC C-PVC	L PP PVDF
1/2	15	0.59	1.89	3.50	2.38	4	0.62	5.12	5.04	0.47	0.848	0.836	0.688	3.43	0.831	-	0.630	3.23	1/2-14NPT	0.59	3.39	3.27
3/4	20	0.79	2.36	3.88	2.75	4	0.62	6.10	6.06	0.55	1.058	1.046	0.719	3.86	1.041	-	1.000	4.37	3/4-14NPT	0.67	4.06	3.86
1	25	0.98	2.76	4.25	3.12	4	0.62	6.50	6.42	0.55	1.325	1.310	0.875	4.37	1.305	-	0.827	4.29	1-11 1/2NPT	0.79	4.45	4.29
1 1/2	40	1.57	3.78	5.00	3.88	4	0.62	7.56	7.48	0.63	1.912	1.894	1.094	5.94	1.889	-	1.260	6.22	1 1/2-11 1/2NPT	0.98	5.94	5.79
2	50	2.01	4.17	6.00	4.75	4	0.75	8.43	8.31	0.63	2.387	2.369	1.156	6.77	2.364	-	1.260	6.93	2-11 1/2NPT	1.10	6.97	6.73

BALL FOOT VALVE

- INTEGRAL MOLDING WITH SCREEN INCREASES STRENGTH AT CONNECTION AREA.
- FLOW PASSAGE STRUCTURE WITH LOW FLUID RESISTANCE
- SMALL PARTS QUANTITY AND A SINGLE CONNECTION REDUCE EXTERNAL STRESS EFFECTS, ALLOWING HIGH FINISHING ACCURACY.
- LIGHTWEIGHT AND SMALL SIZE ALLOW INSTALLATION IN NARROW SPACES AND FACILITATE DISASSEMBLED CLEANING.

BASIC SPECIFICATIONS

VALVE TYPE — **BALL FOOT VALVE**

SIZE — **15 mm—100 mm (1/2 inch—4 inch)**

BODY MATERIAL — **U-PVC** **C-PVC** **PP** **PVDF**

SEAL MATERIAL / SEAT — **EPDM** **FKM** **etc.**

CONNECTION / FLANGED — **JIS5K, JIS10K, DIN, ANSI**

SOCKET — **JIS, DIN, ANSI**

THREADED — **Rc, Rp, NPT**

	FLUID TEMPERATURE	MAXIMUM WORKING PRESSURE (NORMAL TEMPERATURE) MPa{kgf/cm²}		CONNECTION METHOD		
		15 mm—50 mm	80mm—100mm	FLANGED	SOCKET	THREADED
U-PVC	0℃ ~ 50℃	1.0{10.2}	0.7{7.1}	○	○	○
C-PVC	0℃ ~ 90℃	1.0{10.2}	0.7{7.1}	○	○	○
PP	-20℃ ~ 80℃	1.0{10.2}	0.5{5.1}	—	○	○
PVDF	-20℃ ~100℃	1.0{10.2}	0.7{7.1}	—	○	○

NOTES The maximum working pressure is the value including the water hammer pressure. Be careful that the maximum working pressure is not exceeded during use.

* Concerning the allowable pressure for each temperature and material, see the technical documents at the end of this catalog.

MANUAL



PARTS LIST MANUAL

FLANGED

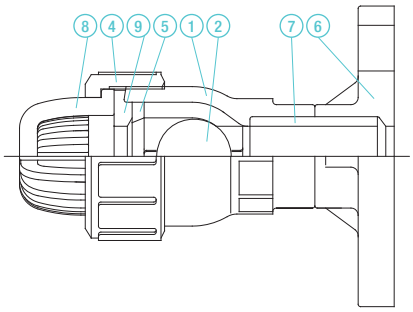

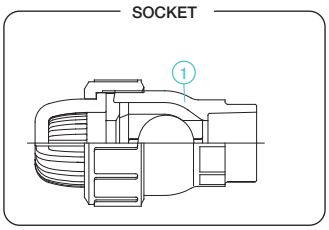

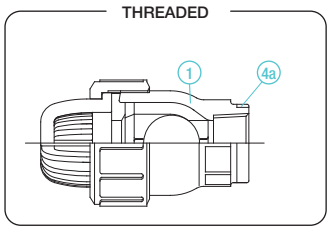

PART NO. / NAME	QTY	MATERIAL
① BODY	1	FLANGED U-PVC, C-PVC SOCKET U-PVC, C-PVC, PP, PVDF THREADED U-PVC, C-PVC, PP, PVDF
② BALL	1	
④ UNION NUT	1	
⑤ STOP RING (A)	1	
⑥ TS FLANGE	1	
⑦ PIPE	1	
⑧ SCREEN	1	

PART NO. / NAME	QTY	MATERIAL
⑨ SEAT	1	EPDM, FKM, etc.
④a RING(1)	1	SUS304

NOTES (1) Used for 15 to 25 mm for body material of C-PVC and connection of threaded type. (2) Used for flanged type. (3) PP flanged type is not produced.

PRODUCT MODEL CODE LIST

MANUAL

ACTUATION	TYPE	OPERATING SYSTEM	BODY MATERIAL	SEAL MATERIAL	CONNECTION	STANDARD	SIZE
V	FT	ZZ	*	*	*	*	***
V MANUAL VALVE	FT BALL FOOT	ZZ NONE	U U-PVC C C-PVC P PP F PVDF	E EPDM V FKM	S SOCKET N THREADED F FLANGED	J JIS 1 JIS10K 5 JIS5K D DIN A ANSI	015 15mm ~ 100 100mm

NOTES
- PP and PVDF socket types are weld type.
- PVDF sockets are of DIN type only.
- For 32 mm and 65 mm flanged types, individual service may be available. Contact us for more details.
- PP and PVDF flanged types are not produced.

MANUAL

BALL FOOT VALVE

TYPE——VFTZZ

CONNECTION / FLANGED, SOCKET——JIS, DIN, ANSI THREADED——Rc, Rp, NPT

FLANGED

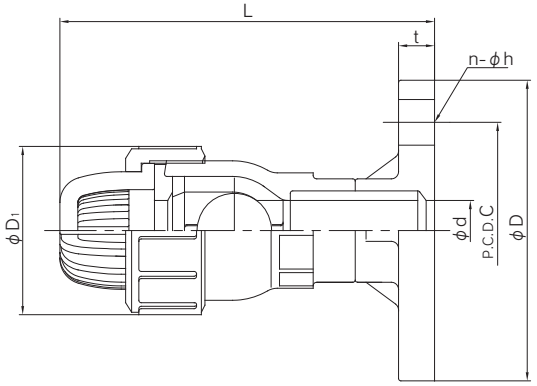

SOCKET

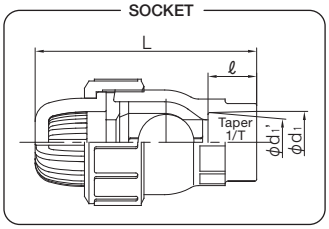

THREADED

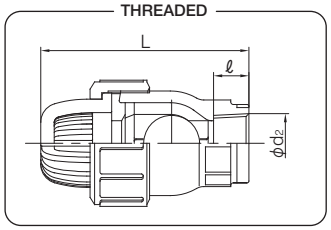

■ JIS (Unit: mm)

mm	D1	d	FLANGED JIS5K D	C	n	h	JIS 10K D	C	n	h	L U-PVC	L C-PVC	t	SOCKET U-PVC C-PVC d1	ℓ	1/T	L	PP d1	d2	ℓ	L	THREADED d2	ℓ	L U-PVC C-PVC	L PVDF PP
15	48	18	80	60	4	12	95	70	4	15	130	130	14	22.11	20	1/34	95	21.2	20.2	22	97	Rc 1/2	15	90	88
20	60	22	85	65	4	12	100	75	4	15	150	150	15	26.13	24	1/34	110	26.2	25.2	23	108	Rc 1/4	17	103	101
25	70	25	95	75	4	12	125	90	4	19	167	171	15	32.16	27	1/34	121	33.0	32.0	25	118	Rc 1	20	114	111
40	96	41	120	95	4	15	140	105	4	19	246	250	16	48.21	37	1/37	184	47.0	46.0	28	174	Rc 1 1/2	25	172	169
50	106	52	130	105	4	15	155	120	4	19	274	277	20	60.25	42	1/37	203	59.0	58.0	28	188	Rc 2	28	189	185
80	152	78	180	145	4	19	185	150	8	19	396	409	22	89.60	64	1/49	323	88.0	86.0	35	293	Rc 3	35	294	289
100	210	100	200	165	8	19	210	175	8	19	506	518	22	114.70	84	1/56	413	113.0	111.0	45	372	Rc 4	45	374	367

■ DIN (Unit: mm)

mm		SOCKET U-PVC C-PVC d1	ℓ	L	PP PVDF d1	d1'	ℓ	L	THREADED d2	ℓ	L U-PVC C-PVC	L PVDF PP
15		20	16	91	19.50	19.30	14.5	89	Rp 1/2	15	90	88
20		25	19	105	24.50	24.30	16	101	Rp 3/4	17	103	101
25		32	22	116	31.50	31.30	18	111	Rp 1	20	114	111
40		50	31	178	49.45	49.20	23.5	169	Rp 1 1/2	25	172	169
50		63	38	199	62.50	62.10	27.5	187	Rp 2	28	189	184
80		90	51	310	89.20	38.85	35.5	293	Rp 3	35	294	288
100		110	61	390	109.05	108.65	41.5	368	Rp 4	45	374	366

■ ANSI (Unit: inch)

inch	mm	d	D1	FLANGED D	C	n	h	L U-PVC U-PVC	t	SOCKET d1	d1'	ℓ	L	THREADED d2	ℓ	L U-PVC C-PVC	L PVDF PP
1/2	15	0.71	1.89	3.50	2.38	4	0.62	5.55	0.47	0.848	0.836	0.69	3.74	1/2-14NPT	0.59	3.54	3.46
3/4	20	0.87	2.36	3.86	2.76	4	0.62	6.42	0.51	1.058	1.046	0.72	4.17	3/4-14NPT	0.67	4.06	3.98
1	25	0.98	2.76	4.25	3.13	4	0.62	6.73	0.59	1.325	1.310	0.87	4.76	1-11 1/2 NPT	0.79	4.49	4.37
1 1/2	40	1.61	3.78	5.00	3.88	4	0.62	9.80	0.63	1.912	1.894	1.09	6.97	1 1/2-11 1/2NPT	0.98	6.77	6.65
2	50	2.05	4.17	5.98	4.74	4	0.75	10.91	0.79	2.387	2.369	1.16	7.60	2-11 1/2 NPT	1.10	7.44	7.24
3	80	3.07	5.98	7.52	6.00	4	0.75	16.10	0.87	3.516	3.492	1.87	12.09	3-8NPT	1.38	11.57	11.34
4	100	3.94	8.27	9.02	7.50	8	0.75	20.41	0.87	4.518	4.491	2.00	14.96	4-8NPT	1.77	14.72	14.41

STOP VALVE (GLOBE VALVE)

- PLASTIC BODY WITH HIGH RESISTANCE TO CORROSION, CHEMICALS AND WEAR.
- COMPACT SIZE AND AFFORDABLE TYPE
- ALSO AVAILABLE FOR FLOW CONTROL OR NEEDLE VALVE (SPECIAL ORDER)

BASIC SPECIFICATIONS

VALVE TYPE — **STOP VALVE (GLOBE VALVE)**
SIZE — **15 mm—100 mm (1/2 inch—4 inch)**
BODY MATERIAL — **U-PVC** **PP**
SEAL MATERIAL / PACKING — **EPDM** **PTFE** **etc.**
CONNECTION / FLANGED — **JIS5K, JIS10K, DIN, ANSI**
SOCKET — **JIS, DIN, ANSI**
THREADED — **Rc, Rp, NPT**
HIGH PURITY SERIES — **LUBRICANT FREE**

	FLUID TEMPERATURE	MAXIMUM WORKING PRESSURE (NORMAL TEMPERATURE) MPa{kgf/cm²}	CONNECTION METHOD		
			FLANGED	SOCKET	THREADED
U-PVC	0℃ ~ 50℃	1.0 {10.2}	○	○	○
PP	-20℃ ~ 80℃	0.75 {7.7}	○	—	○

NOTES The maximum working pressure is the value including the water hammer pressure. Be careful that the maximum working pressure is not exceeded during use.
* Concerning the allowable pressure for each temperature and material, see the technical documents at the end of this catalog.



PARTS LIST MANUAL

PRODUCT MODEL CODE LIST
MANUAL

ACTUATION	TYPE	OPERATING SYSTEM	BODY MATERIAL	SEAL MATERIAL	CONNECTION	STANDARD	SIZE	HIGH PURITY SERIES
V	ST	MH	*	*	*	*	***	1
V MANUAL VALVE	ST STOP VALVE (GLOBE VALVE)	MH ROUND HANDLE	U U-PVC P PP	E EPDM V FKM T PTFE	S SOCKET N THREADED F FLANGED	J JIS 1 JIS10K 5 JIS5K	015 15mm ~ 100 100mm	1 LUBRICANT FREE

MANUAL | FLANGED

STOP VALVE (GLOBE VALVE)

TYPE——VSTMH
CONNECTION / FLANGED——JIS, DIN, ANSI

FLANGED

15 mm — 32 mm
(1½ inch — 1¼ inch)

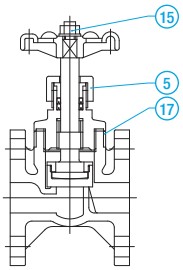

40 mm — 50 mm
(1½ inch — 2 inch)

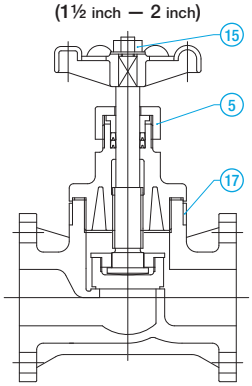

65 mm — 100 mm (2½ inch — 4 inch)

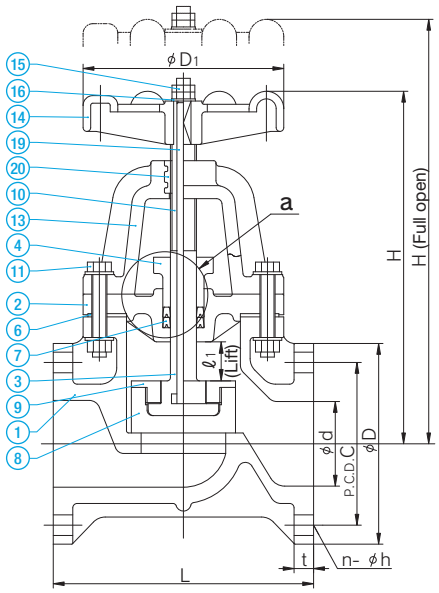

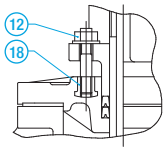

DETAILS OF SECTION "a"

PART NO. / NAME	QTY	MATERIAL
① BODY	1	U-PVC, PP
② BONNET	1	U-PVC, PP
③ STEM (1)	1	U-PVC, PP
④ PACKING GLAND	1	U-PVC, PP
⑤ GLAND NUT (2)	1	U-PVC
⑥ PACKING (3)	1	EPDM, PTFE, etc.
⑦ GLAND PACKING	1 SET	PDM, PTFE, etc.
⑧ DISC	1	PP
⑨ STEM HOLDER	1	PP
⑩ STEM WITH TRAPEZOIDAL SCREW	1	C3604 ·····Used for 65 to 100 mm.
⑪ HEX BOLT/NUT	8	SUS304 ·····Used for 65 to 100 mm.
⑫ STUD BOLT/NUT	2	SUS304 ·····Used for 65 to 100 mm.
⑬ STEM SUPPORT	1	PP ·····Used for 65 to 100 mm.
⑭ HANDLE WHEEL	1	PP
⑮ NUT (A)	1	U-PVC·····Used for 15 to 50 mm.
	2	SUS304 ·····Used for 65 to 100 mm.
⑯ WASHER	1	U-PVC·····Used for 15 to 50 mm.
	1	SUS304 ·····Used for 65 to 100 mm.
⑰ REINFORCEMENT RING	1	SUS304 ·····Used for 15 to 50 mm for body material of PP.
⑱ STUD NUT	2	C3604 ·····Used for 65 to 100 mm.
⑲ EMBEDDED STEM FITTING	1	SS400 ·····Used for 65 to 100 mm.
⑳ EMBEDDED SUPPORT FITTING	1	BC6 ·····Used for 65 to 100 mm.

NOTES (1) For 65 to 100 mm, PP only.
(2) Used for 15 to 50 mm.
(3) PTFE+EPDM when the packing is made of PTFE.

■ JIS, DIN (Unit: mm)

								JIS5K				JIS10K				DIN PN10			
mm	d	D1	ℓ1	H	H (FULL OPEN)	L	t	D	C	n	h	D	C	n	h	D	C	n	h
15	18	66	8	124	132	85	12	80	60	4	12	95	70	4	15	95	65	4	14
20	24	66	8	132	140	95	14	85	65	4	12	100	75	4	15	105	75	4	14
25	28	91	11	150	161	110	14	95	75	4	12	125	90	4	19	115	85	4	14
32	37	91	13	154	167	135	16	115	90	4	15	135	100	4	19	140	100	4	18
40	41	135	17	210	230	190	16	120	95	4	15	140	105	4	19	150	110	4	18
50	52	135	22	228	252	200	16	130	105	4	15	155	120	4	19	165	125	4	18
65	67	185	35	310	345	220	18	155	130	4	15	175	140	4	19	185	145	4	18
80	78	185	35	324	359	240	18	180	145	4	19	185	150	8	19	200	160	8	18
100	100	185	40	379	419	290	18	200	165	8	19	210	175	8	19	220	180	8	18

■ ANSI (Unit: inch)

									ANSI CLASS150			
inch	mm	d	D1	ℓ1	H	H (full open)	L	t	D	C	n	h
1/2	15	0.71	2.60	0.31	4.88	5.20	3.35	0.47	3.50	2.38	4	0.62
3/4	20	0.94	2.60	0.31	5.20	5.51	3.74	0.55	3.88	2.75	4	0.62
1	25	1.10	3.58	0.43	5.91	6.34	4.33	0.55	4.25	3.12	4	0.62
1 1/4	32	1.46	3.58	0.51	6.06	6.57	5.31	0.63	4.62	3.50	4	0.62
1 1/2	40	1.61	5.31	0.67	8.27	9.06	7.48	0.63	5.00	3.88	4	0.62
2	50	2.05	5.31	0.87	8.98	9.92	7.87	0.63	6.00	4.75	4	0.75
2 1/2	65	2.64	7.28	1.38	12.20	13.58	8.66	0.71	7.00	5.50	4	0.75
3	80	3.07	7.28	1.38	12.76	14.13	9.45	0.71	7.50	6.00	4	0.75
4	100	3.94	7.28	1.57	14.92	16.50	11.42	0.71	9.00	7.50	8	0.75

MANUAL | THREADED | SOCKET

STOP VALVE (GLOBE VALVE)

TYPE——VSTMH
CONNECTION / SOCKET——JIS, DIN, ANSI THREADED——Rc, Rp, NPT

THREADED

15 mm — 32 mm
(1½ inch — 1¼ inch)

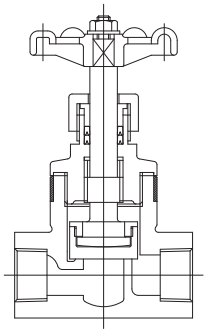

40 mm — 50 mm
(1½ inch — 2 inch)

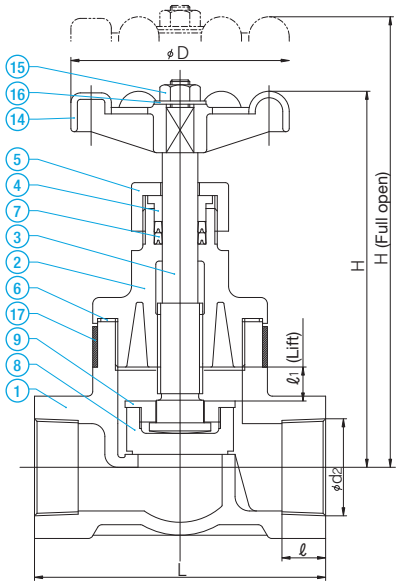

PART NO. / NAME	QTY	MATERIAL
1 BODY	1	U-PVC, PP
2 BONNET	1	U-PVC, PP
3 STEM	1	U-PVC, PP
4 PACKING GLAND	1	U-PVC, PP
5 UNION NUT	1	U-PVC
6 PACKING	1	EPDM, PTFE, etc.
7 GLAND PACKING(1)	1 SET	EPDM, PTFE, etc.
8 DISC	1	PP
9 STEM HOLDER	1	PP
14 HANDLE WHEEL	1	PP
15 NUT (A)	1	U-PVC
16 WASHER	1	U-PVC
17 REINFORCEMENT RING	1	SUS304··· Used when the body material is PP.

NOTES (1) PTFE+EPDM when the gland packing is made of PTFE.

SOCKET

15 mm — 25 mm
(½ inch — 1 inch)

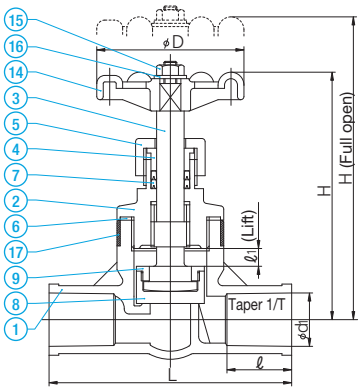

■ JIS, DIN (Unit: mm)

mm	D	ℓ1	H	H (FULL OPEN)	JIS SOCKET U-PVC d1	JIS SOCKET U-PVC ℓ	JIS SOCKET U-PVC 1/T	JIS SOCKET U-PVC L	JIS THREADED d2	JIS THREADED ℓ	JIS THREADED L	DIN SOCKET U-PVC d1	DIN SOCKET U-PVC ℓ	DIN SOCKET U-PVC 1/T	DIN SOCKET U-PVC L
15	66	8	124	132	22.40	30	1/34	110	Rc 1/2	15	85	20	16	6	82
20	66	8	132	140	26.45	35	1/34	130	Rc 3/4	18	95	25	19	8	98
25	91	11	150	161	32.55	40	1/34	150	Rc 1	20	110	32	22	11	114
32	91	13	154	167	-	-	-	-	Rc 1 1/4	25	135	-	-	-	-
40	135	17	218	235	-	-	-	-	Rc 1 1/2	25	140	-	-	-	-
50	135	22	237	259	-	-	-	-	Rc 2	27	180	-	-	-	-

■ ANSI (Unit: inch)

inch	mm	D	ℓ1	H	H (FULL OPEN)	ANSI SOCKET d2	ANSI SOCKET d1	ANSI SOCKET ℓ	ANSI SOCKET L	ANSI THREADED d2	ANSI THREADED ℓ	ANSI THREADED L
1/2	15	2.60	0.31	4.88	5.20	0.848	0.59	1.18	4.33	1/2-14NPT	0.59	3.35
3/4	20	2.60	0.31	5.20	5.51	1.058	0.71	1.38	5.12	3/4-14NPT	0.71	3.74
1	25	3.58	0.43	5.91	6.34	1.325	0.98	1.58	5.91	1-11 1/2NPT	0.79	4.33
1 1/4	32	3.58	0.51	6.06	6.57	-		-	-	1 1/4-11 1/2NPT	0.98	5.32
1 1/2	40	5.31	0.67	8.58	9.25	-		-	-	1 1/2-11 1/2NPT	0.98	5.51
2	50	5.31	0.87	9.33	10.20	-		-	-	2-11 1/2NPT	1.06	7.09

CONSTANT FLOW VALVE

- USE OF THE POWER OF THE FLUID ELIMINATES THE USE OF ANY POWER SOURCE, RESULTING IN POWER SAVING.
- HIGH ACCURACY (WITHIN +/-6% OF FULL SCALE) AND LARGE RANGEABILITY (RATIO OF MAX. AND MIN. FLOW SETTING VALUES)
- THE SET FLOW CAN BE CHANGED BY HANDLE OPERATION. CAN ALSO BE USED AS AN INHIBITOR VALVE (COMPLETE CLOSURE).
- EQUIPPED WITH OPENING DEGREE INDICATOR THAT ALLOWS FOR CHECKING OF SET FLOW RATE (m3/hr).
- THE WETTED PART USES CORROSION-RESISTANT AND LIGHTWEIGHT PLASTIC AND ELASTOMER.
- USES SPRING (SUS304) FULLY COATED WITH FLUORORESIN HAVING ADEQUATE DURABILITY AND CHEMICAL RESISTANCE.

BASIC SPECIFICATIONS

VALVE TYPE — **CONSTANT FLOW VALVE**

SIZE — **15 mm, 20 mm, 25 mm, 50 mm, 80 mm, 100 mm (1/2 inch, 3/4 inch, 1 inch, 2 inch, 3 inch, 4 inch)**

BODY MATERIAL — **U-PVC**

SEAL MATERIAL — **EPDM etc.**

CONNECTION / FLANGED — **JIS5K, JIS10K, DIN, ANSI**

HIGH PURITY SERIES — **LUBRICANT FREE**

	FLUID TEMPERATURE	MAXIMUM WORKING PRESSURE (NORMAL TEMPERATURE) MPa{kgf/cm²}	
		15mm—80mm	100mm
U-PVC	0℃ ~ 50℃	1.0 {10.2}	0.5 {5.1}

NOTES The maximum working pressure is the value including the water hammer pressure. Be careful that the maximum working pressure is not exceeded during use.
* Concerning the allowable pressure for each temperature and material, see the technical documents at the end of this catalog.

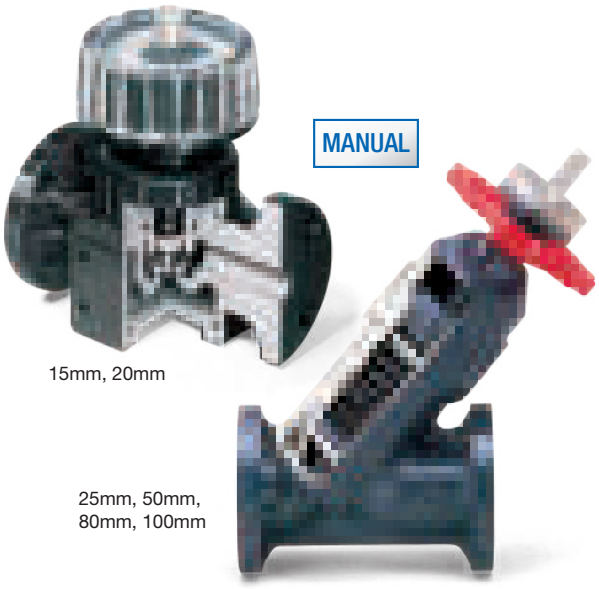

PARTS LIST MANUAL

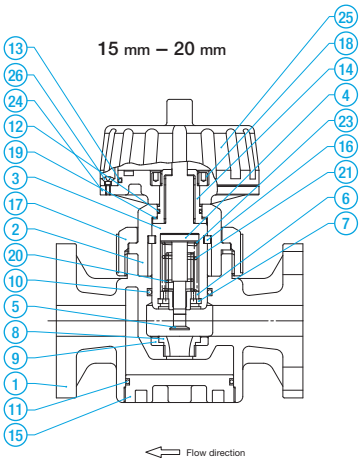

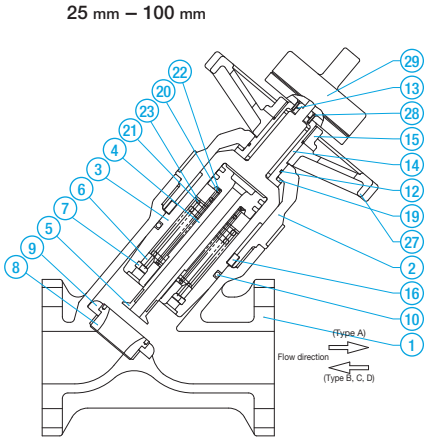

PART NO. / NAME	QTY	MATERIAL
1 BODY	1	U-PVC
2 BONNET	1	U-PVC
3 CYLINDER	1	U-PVC
4 PISTON	1	U-PVC
5 PLUG	1	U-PVC
6 SPRING SEAT	1	U-PVC
7 STOP RING	1	PVDF
8 ORIFICE	1	U-PVC
9 SEAT	1	EPDM, etc.
10 O-RING (A)	1 (15 - 20 mm)	EPDM, etc. (1)
	2 (25 - 100 mm)	EPDM, etc. (1)

PART NO. / NAME	QTY	MATERIAL
12 O-RING (C)	1	EPDM
13 O-RING (D)	1	EPDM
14 SLEEVE	1	C3604
15 CAP	1	U-PVC
16 KEY	2	PP (15 - 20mm)
		U-PVC (25 - 100mm)
19 THRUST RING	1	PP
20 SPRING (A)	1	SUS304*
21 SPRING (B)	1	SUS304*
23 WASHER (B)	1	U-PVC

Used for 15 - 20 mm only.

PART NO. / NAME	QTY	MATERIAL
11 O-RING (B)	1	EPDM, etc.
17 UNION NUT	1	U-PVC
18 NUT	1	ABS
24 HANDLE BASE	1	ABS
25 HANDLE COVER	1	PC
26 CROSS RECESSED RAISED COUNTERSUNK HEAD SCREW	4	SUS304

Used for 25 - 100 mm only.

PART NO. / NAME	QTY	MATERIAL
22 WASHER (A)	1	U-PVC
27 HANDLE	1	PP
28 FASTENING SCREW	4	C3604
29 OPENING DEGREE INDICATOR	1 SET	ABS, etc.

NOTE (1) For FKM, complete closure is not available.
* SUS304 is coated with fluororesin.

PRODUCT MODEL CODE LIST

MANUAL

ACTUATION	TYPE	OPERATING SYSTEM	BODY MATERIAL	SEAL MATERIAL	CONNECTION	STANDARD	SIZE	HIGH PURITY SERIES
V	CF	*T	U	E	F	*	***	1
V MANUAL VALVE	CF CONSTANT FLOW	AT TYPE A BT TYPE B CT TYPE C DT TYPE D	U U-PVC	E EPDM V FKM	F FLANGED	1 JIS 10K 5 JIS 5K	015 15mm ~ 100 100mm	1 LUBRICANT FREE

MANUAL

CONSTANT FLOW VALVE

TYPE——VCF

CONNECTION / FLANGED——JIS, DIN, ANSI

15 mm – 20 mm

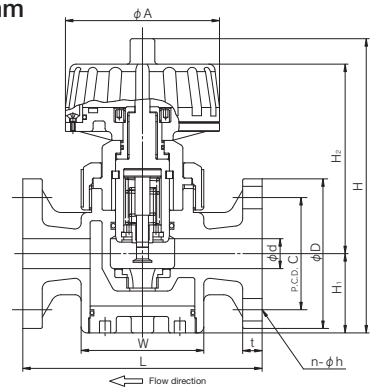

25 mm – 100 mm

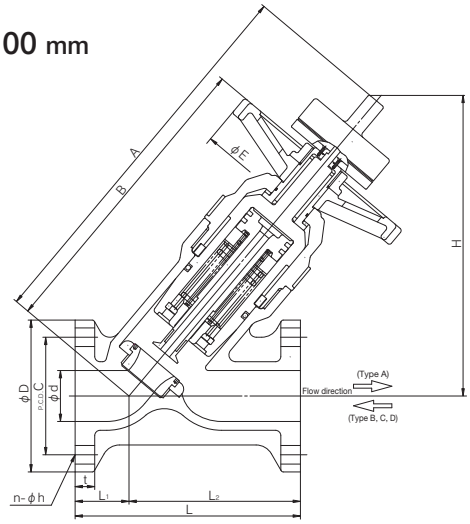

■ JIS, DIN (Unit: mm)

mm	d	W	A	H₁	H₂	H	L	t	JIS								DIN			
									JIS 5K				JIS 10K				DIN PN10			
									D	C	n	h	D	C	n	h	D	C	n	h
15	16	82×82	103	51	129	197	160	12	80	60	4	12	95	70	4	15	95	65	4	14
20	20	82×82	103	53	127	197	160	13	85	65	4	12	100	75	4	15	100	75	4	14

■ JIS, DIN (Unit: mm)

mm	d	L₁	L₂	A	B	H	E	L	t	JIS								DIN			
										JIS 5K				JIS 10K				DIN PN10			
										D	C	n	h	D	C	n	h	D	C	n	h
25	25	40	120	272	201	218	150	160	14	95	75	4	12	125	90	4	19	115	85	4	14
50	52	55	175	390	309	307	210	230	20	130	105	4	15	155	120	4	19	165	125	4	18
80	78	70	210	484	387	377	210	280	22	180	145	4	19	185	150	8	19	200	160	8	18
100	100	85	325	623	483	446	250	410	22	200	165	8	19	210	175	8	19	220	180	8	18

■ ANSI (Unit: inch)

inch	mm	d	W	A	H₁	H₂	H	L	t	ANSI			
										ANSI CLASS150			
										D	C	n	h
1/2	15	0.63	3.23×3.23	4.06	2.01	5.08	7.76	6.30	0.47	3.50	2.38	4	0.63
3/4	20	0.79	3.23×3.24	4.06	2.09	5.00	7.76	6.30	0.51	3.86	2.76	4	0.63

■ ANSI (Unit: inch)

inch	mm	d	L₁	L₂	A	B	H	E	L	t	ANSI			
											ANSI CLASS150			
											D	C	n	h
1	25	0.98	1.57	4.72	10.71	7.91	8.58	5.91	6.30	0.55	4.25	3.13	4	0.63
2	50	2.05	2.17	6.89	15.35	12.17	12.09	8.27	9.06	0.79	5.98	4.74	4	0.75
3	80	3.07	2.76	8.27	19.06	15.24	14.84	8.27	11.02	0.87	7.25	6.00	8	0.75
4	100	3.94	3.35	12.80	24.53	19.02	17.56	9.84	16.14	0.87	8.66	7.50	8	0.75

NEEDLE VALVE

- OUR ORIGINAL SPECIAL SHAPE PLUG ALLOWS FOR HIGHLY ACCURATE FLOW CONTROL.
- SHUTOFF VALVE AND RUBBER SEAT ALLOW FOR COMPLETE SEALING.
- INDEPENDENT FROM SHUTOFF VALVE, IT MAINTAINS HIGH-ACCURACY CONTROL FUNCTION FOR A LONG PERIOD.
- INSPECTION AND CLEANING OF INSIDE OF THE VALVE CAN BE PERFORMED WITHOUT DISMOUNTING IT FROM THE PIPE, BY REMOVING THE CAP (15 mm, 20 mm).
- INTEGRALLY MOLDED BODY THAT IS LIGHTWEIGHT, ROBUST AND COMPACT.

MANUAL



BASIC SPECIFICATIONS

VALVE TYPE —— **NEEDLE VALVE**
SIZE —— **15 mm—25 mm (1/2 inch—1 inch)**
BODY MATERIAL —— **U-PVC**
SEAL MATERIAL —— **EPDM etc.**
CONNECTION / FLANGED —— **JIS5K, JIS10K, DIN, ANSI**
HIGH PURITY SERIES —— **LUBRICANT FREE**

	FLUID TEMPERATURE	MAXIMUM WORKING PRESSURE (NORMAL TEMPERATURE) MPa{kgf/cm²}
U-PVC	0℃ ~ 50℃	1.0 {10.2}

NOTES The maximum working pressure is the value including the water hammer pressure. Be careful that the maximum working pressure is not exceeded during use.
* Concerning the allowable pressure for each temperature and material, see "Asahi AV Piping Material Technical Document". * For FKM 25 mm, complete sealing is not available.

Flow characteristics

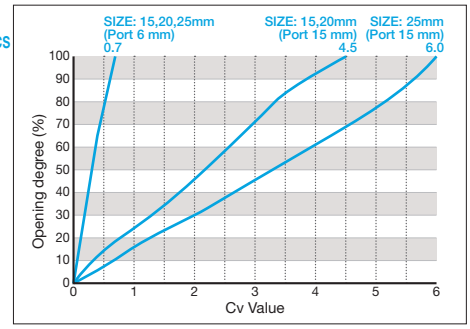

SIZE	PORT SIZE (mm)	
15mm, 20mm	6	15
25mm	6	15

PARTS LIST MANUAL

15 mm – 20 mm

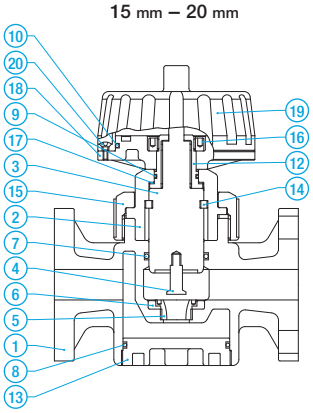

25 mm

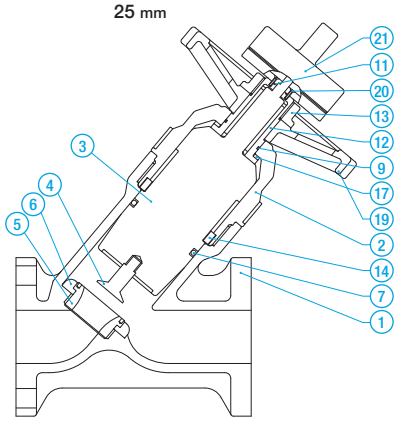

PART NO. / NAME	QTY	MATERIAL
1 BODY	1	U-PVC
2 BONNET	1	U-PVC
3 CYLINDER	1	U-PVC
4 PLUG	1	U-PVC
5 ORIFICE	1	U-PVC
6 SEAT	1	EPDM, etc.
7 O-RING (A)	1	EPDM, etc. (1)
9 O-RING (C)	1	EPDM
12 SLEEVE	1	C3604

PART NO. / NAME	QTY	MATERIAL
13 CAP	1	U-PVC
14 KEY	2	PP(15-20mm)
		U-PVC(25mm)
17 THRUST RING	1	PP
19 HANDLE	1	PC(15-20mm)
		PP(25mm)
20 MACHINE SCREW	4	SUS304(15-20mm)
		C3604(25mm)

Used for 15 - 20 mm only.

PART NO. / NAME	QTY	MATERIAL
8 O-RING (B)	1	EPDM, etc.
10 O-RING (D)	1	EPDM
15 UNION NUT	1	U-PVC
16 NUT	1	ABS
18 HANDLE BASE	1	U-PVC

Used for 25 mm only.

PART NO. / NAME	QTY	MATERIAL
11 O-RING (E)	1	EPDM
21 OPENING DEGREE INDICATOR	1 SET	U-PVC, etc.

NOTES (1) For FKM, complete closure is not available.

PRODUCT MODEL CODE LIST

MANUAL

ACTUATION	TYPE	OPERATING SYSTEM	BODY MATERIAL	SEAL MATERIAL	CONNECTION	STANDARD	SIZE	HIGH PURITY SERIES
V	ND	MH	U	E	F	*	***	1
V MANUAL VALVE	ND NEEDLE	MH ROUND HANDLE	U U-PVC	E EPDM V FKM	F FLANGED	1 JIS 10K 5 JIS 5K	015 15mm ~ 025 25mm	1 LUBRICANT FREE

MANUAL

NEEDLE VALVE

TYPE——VNDMH

CONNECTION / FLANGED——JIS, DIN, ANSI

15 mm – 20 mm

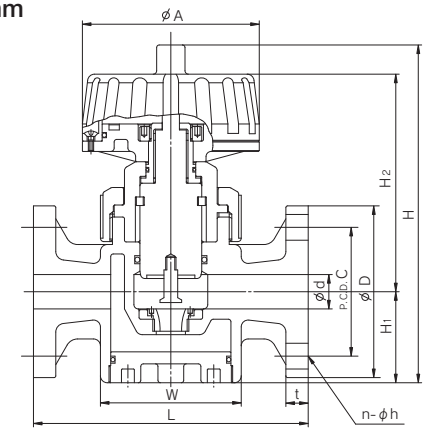

25 mm

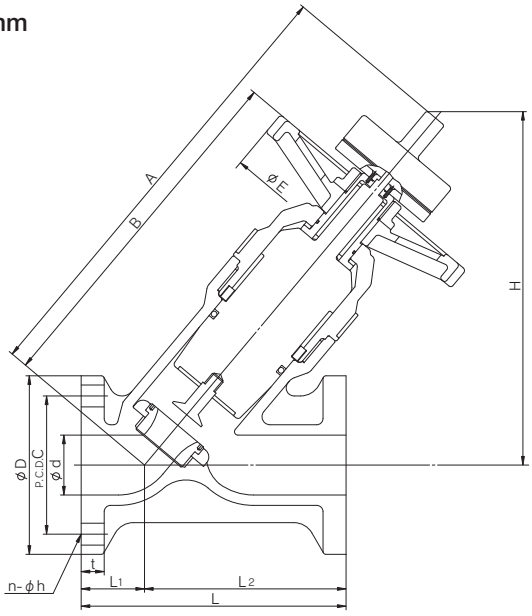

■ JIS, DIN (Unit: mm)

mm	D1	W	A	H1	H2	H3	L	t	JIS 10K D	JIS 10K C	JIS 10K n	JIS 10K h	DIN PN10 D	DIN PN10 C	DIN PN10 n	DIN PN10 h
15	16	82×82	103	51	129	197	160	12	95	70	4	15	95	65	4	14
20	20	82×82	103	53	127	197	160	13	100	75	4	15	105	75	4	14

■ JIS, DIN (Unit: mm)

mm	d	L1	L2	A	B	H	E	L	t	JIS 10K D	JIS 10K C	JIS 10K n	JIS 10K h	DIN PN10 D	DIN PN10 C	DIN PN10 n	DIN PN10 h
25	25	40	120	272	201	218	150	160	14	125	90	4	19	115	85	4	14

■ ANSI (Unit: inch)

inch	mm	D1	W	A	H1	H2	H3	L	t	ANSI CLASS150 D	ANSI CLASS150 C	ANSI CLASS150 n	ANSI CLASS150 h
1/2	15	0.63	3.23×3.23	4.06	2.01	5.08	7.76	6.30	0.47	3.50	2.38	4	0.63
3/4	20	0.79	3.23×3.23	4.06	2.09	5.00	7.76	6.30	0.51	3.86	2.76	4	0.63

■ ANSI (Unit: inch)

inch	mm	d	L1	L2	A	B	H	E	L	t	ANSI CLASS150 D	ANSI CLASS150 C	ANSI CLASS150 n	ANSI CLASS150 h
1	25	0.98	1.57	4.72	10.71	7.91	8.58	5.91	6.30	0.55	4.25	3.13	4	0.63

SELF CONTROL VALVE PRESSURE REDUCING TYPE

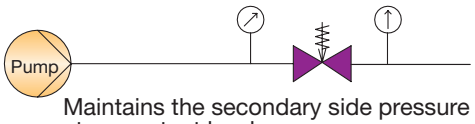

Maintains the secondary side pressure at a constant level.

Even when the primary side pressure fluctuates, the valve maintains secondary side pressure constant.
It works using the fluid pressure only, without using any auxiliary power.
Against the fluid power pressing up the piston, the valve uses the force of compression spring to press down the piston so as to keep balance.
For appropriate flow range, see P.237.

BASIC SPECIFICATIONS

VALVE TYPE — SELF CONTROL VALVE PRESSURE REDUCING TYPE
SIZE — 15 mm–50 mm (1/2 inch–2 inch)
BODY MATERIAL — U-PVC
SEAL MATERIAL — EPDM etc.
CONNECTION / FLANGED — JIS, DIN, ANSI
SOCKET — JIS, DIN, ANSI
THREADED – Rc, RP, NPT
WORKING TEMPERATURE RANGE – 0-50℃
MAX.ALLOWABLE WORKING PRESSURE – 1.0MPa
ALLOWABLE PRESSURE RANGE – 0.05-0.9MPa
HIGH PURITY SERIES — WETTED PARTS LUBRICANT FREE

MANUAL



PRODUCT MODEL CODE LIST
MANUAL

ACTUATION	TYPE	OPERATING SYSTEM	BODY MATERIAL	SEAL MATERIAL	CONNECTION	STANDARD	SIZE	HIGH PURITY SERIES
V	PR	2T	U	*	*	*	***	2
V MANUAL VALVE	PR SELF CONTROL	2T PRESSURE REDUCING TYPE	U U-PVC	E EPDM V FKM Z FKM (PTFE coating)	S SOCKET N THREADED F FLANGED	J JIS 1 JIS10K D DIN A ANSI	015 15mm ~ 050 50mm	2 WETTED PARTS LUBRICANT FREE

TYPE What should be filled in the "xxx" section?

NOTES (1) The 15-40 mm (piston) type and 50 mm (diaphragm) type have different internal structure. Be careful when selecting the type of seal material.
(2) For 50 mm, select either E: EPDM or Z: FKM (PTFE coating). (For 15-40 mm, select E: EPDM or V: FKM.)

MANUAL

SELF CONTROL VALVE PRESSURE REDUCING TYPE

CONNECTION / FLANGED, SOCKET——JIS, DIN, ANSI THREADED——Rc, RP, NPT

50 mm
V82 INSIDE STRUCTURE DIAGRAM

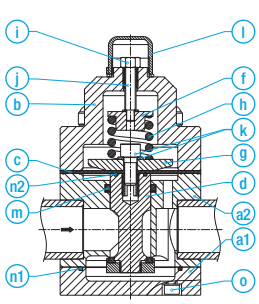

15 mm – 40 mm
V182 INSIDE STRUCTURE DIAGRAM

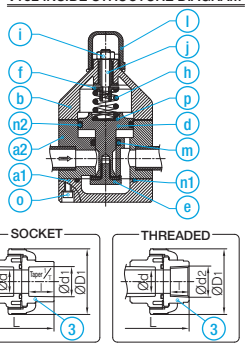

FLANGED

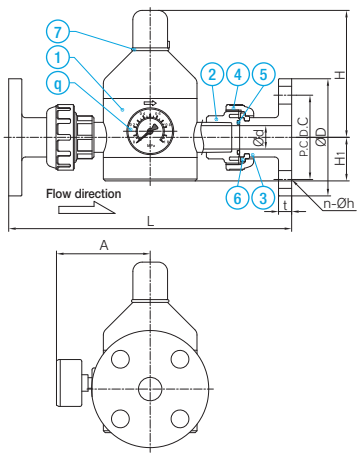

PART NO. / NAME	QTY	MATERIAL	MEMO
a1 BODY (LOWER)	1	U-PVC	
a2 BODY (UPPER)	1	U-PVC	
b HOUSING	1	U-PVC	
c DIAPHRAGM	1	EPDM	Used for V82.
d PISTON	1	U-PVC	
e PISTON BASE	1	U-PVC	Used for V182.
f SPRING PLATE	1	Aluminum	
g COMPRESSOR	1	U-PVC	Used for V82.
h COMPRESSION SPRING	1	Spring steel	
i LOCK NUT	1	Polyamide	
j ADJUSTING SCREW	1	—	
k BOLT, WASHER	1	—	Used for V82.
l CAP	1	Polystyrene	
m RING SEAL	1	EPDM	
n1 O-RING (A)	1	EPDM	
n2 O-RING (B)	1	EPDM	
o BOLT, NUT, WASHER	4	—	
p SPRING SUPPORT PLATE	1	—	Used for V182.
q PRESSURE GAUGE	1	ABS, etc.	
2 PJ-BODY	2	U-PVC	SELF CONTROL VALVE DEDICATED FOR TRUE UNION
3 END CONNECTOR	2	U-PVC	
4 UNION NUT	2	U-PVC	
5 O-RING (C)	2	EPDM	
6 STOP RING	2	PVDF	Used for flanged type.
7 O-RING (D)	1	EPDM	

■ JIS, DIN (Unit: mm)

						JIS												DIN											
						FLANGED						SOCKET				THREADED			FLANGED DIN PN10/PN16						SOCKET			THREADED		
mm	d	D1	H	H1	A	D	C	n	h	L	t	d1	ℓ	1/T	L	d2	ℓ	L	D	C	n	h	L	t	d1	ℓ	L	d2	ℓ	L
15	15	48	103	30	90	95	70	4	15	221	12	22.11	20	1/34	186	Rc 1/2	15	180	95	65	4	14	208	12	20	16	180	Rp1/2	15	180
20	20	60	137	46	100	100	75	4	15	292	14	26.13	24	1/34	248	Rc 3/4	17	240	105	75	4	14	270	14	25	19	239	Rp3/4	17	240
25	25	70	137	46	100	125	90	4	19	302	14	32.16	27	1/34	260	Rc 1	20	246	115	85	4	14	275	14	32	22	246	Rp1	20	246
32	31	82	178	55	115	135	100	4	19	346	16	38.19	30	1/34	318	Rc 1 1/4	22	306	140	100	4	18	336	16	40	26	306	Rp1 1/4	22	306
40	40	100	178	55	115	140	105	4	19	379	16	48.21	37	1/37	356	Rc 1 1/2	25	330	150	110	4	18	367	16	50	31	331	Rp1 1/2	25	330
50	51	106	213	75	125	155	120	4	19	395	16	60.25	42	1/37	380	Rc 2	28	358	165	125	4	18	395	16	63	38	388.2	Rp2	28	358

■ ANSI (Unit: inch)

							ANSI													
							FLANGED ANSI CLASS 150						SOCKET				THREADED		
inch	mm	d	D1	H	H1	A	D	C	n	h	L	t	d1	d1'	ℓ	L	d2	ℓ	L
1/2	15	0.59	1.89	4.06	1.18	3.54	3.50	2.38	4	0.62	8.70	0.47	0.848	0.836	0.875	7.52	1/2 -14NPT	0.59	7.09
3/4	20	0.79	2.36	5.39	1.81	3.94	3.88	2.75	4	0.62	11.50	0.55	1.058	1.046	1.000	9.80	3/4 -14NPT	0.67	9.45
1	25	0.98	2.76	5.39	1.81	3.94	4.25	3.12	4	0.62	11.89	0.55	1.325	1.310	1.125	10.24	1 -11 1/2NPT	0.79	9.69
1 1/4	32	1.22	3.23	7.01	2.17	4.53	4.62	3.5	4	0.62	13.62	0.63	1.670	1.655	1.250	12.60	1 1/4 -11 1/2NPT	0.87	12.05
1 1/2	40	1.57	3.94	7.01	2.17	4.53	5.00	3.88	4	0.62	14.92	0.63	1.912	1.894	1.375	13.82	1 1/2 -11 1/2NPT	0.98	12.99
2	50	2.01	4.17	8.39	2.95	4.92	6.00	4.75	4	0.75	15.55	0.63	2.387	2.369	1.500	14.57	2- 11 1/2NPT	1.10	14.09

SELF CONTROL VALVE PRESSURE RELIEF TYPE

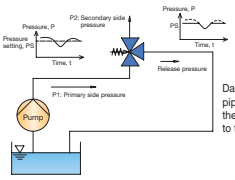

Damage of equipment and piping is prevented by releasing the pressure exceeding the PS to the outside.

This valve is used for piping lines and equipment where excessive pressure needs to be prevented. The T-shaped pipe structure allows the fluid to flow in 3 directions. In addition to the intake and discharge ports located sideways in a straight line (horizontal direction), there is also a discharge port on the lateral side (vertical direction). If the pressure in the horizontal direction exceeds the set pressure, the valve will open so that the fluid is discharged from the vertically located discharge port. The pressure dispersion and closure operation allow the valve to maintain the horizontal pressure constant and reduce the peak pressure.
For appropriate flow range, see P.237.

BASIC SPECIFICATIONS

VALVE TYPE——SELF CONTROL VALVE PRESSURE REDUCING TYPE
SIZE——15 mm—50 mm (1/2 inch—2 inch)
BODY MATERIAL——U-PVC
SEAL MATERIAL——EPDM etc.
CONNECTION / FLANGED—JIS, DIN, ANSI
SOCKET—JIS, DIN, ANSI
THREADED—Rc, RP, NPT
WORKING TEMPERATURE RANGE—0-50℃
MAX.ALLOWABLE WORKING PRESSURE—1.0MPa
ALLOWABLE PRESSURE RANGE—0.05-0.9MPa
HIGH PURITY SERIES—WETTED PARTS LUBRICANT FREE

MANUAL



PRODUCT MODEL CODE LIST

MANUAL

ACTUATION	TYPE	OPERATING SYSTEM	BODY MATERIAL	SEAL MATERIAL	CONNECTION	STANDARD	SIZE	HIGH PURITY SERIES
V	PR	5T	U	*	*	*	***	2
V MANUAL VALVE	PR SELF CONTROL	5T PRESSURE RELIEF TYPE	U U-PVC	E EPDM Z FKM (PTFE coating)	S SOCKET N THREADED F FLANGED	J JIS 1 JIS10K D DIN A ANSI	015 15mm ~ 050 50mm	2 WETTED PARTS LUBRICANT FREE

TYPE What should be filled in the "xxx" section?

MANUAL

SELF CONTROL VALVE PRESSURE RELIEF TYPE

CONNECTION / FLANGED, SOCKET——JIS, DIN, ANSI THREADED——Rc, RP, NPT

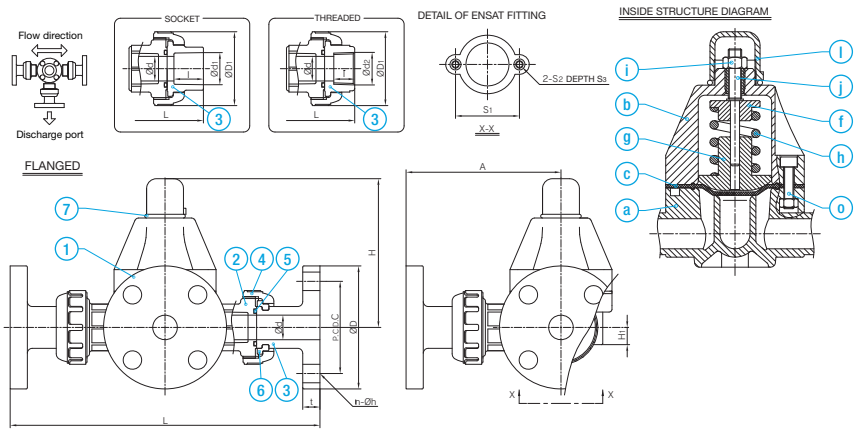

PART NO. / NAME	QTY	MATERIAL	MEMO
(a) BODY	1	U-PVC	
(b) HOUSING	1	U-PVC	
(c) DIAPHRAGM	1	□EPDM, □FKM-PTFE COATING	
(f) SPRING PLATE	1	Aluminum	
(g) COMPRESSOR	1	PP	
(h) COMPRESSION SPRING	1	Spring steel	
(i) LOCK NUT	1	Polyamide	
(j) ADJUSTING SCREW	1	—	
(l) CAP	1	Polystyrene	
(o) BOLT, WASHER, NUT	4	—	
(2) PJ-BODY	2	U-PVC	SELF CONTROL VALVE DEDICATED FOR TRUE UNION
(3) END CONNECTOR	2	U-PVC	
(4) UNION NUT	2	U-PVC	
(5) O-RING (C)	2	EPDM (FKM*)	
(6) STOP RING	2	PVDF	Used for flanged type.
(7) O-RING (D)	1	EPDM	

* When the diaphragm is FKM with PTFE coating.

■ JIS, DIN (Unit: mm)

								JIS																DIN											
								FLANGED							SOCKET						THREADED				FLANGED DIN PN10/PN16						SOCKET			THREADED		
mm	d	D1	H	H1	S1	S2	S3	D	C	n	h	L	t	A	d1	ℓ	1/T	L	A	d2	ℓ	L	A	D	C	n	h	L	t	d1	ℓ	L	d2	ℓ	L
15	15	48	120	20	90	M6	9	95	70	4	15	221	12	110.5	22.11	20	1/34	186	93	Rc 1/2	15	180	90	95	65	4	14	208	12	20	16	180	Rp1/2	15	180
20	20	60	120	20	100	M6	9	100	75	4	15	252	14	126.0	26.13	24	1/34	208	104	Rc 3/4	17	200	100	105	75	4	14	230	14	25	19	199	Rp3/4	17	240
25	25	70	175	27	100	M6	9	125	90	4	19	302	14	151.0	32.16	27	1/34	260	130	Rc 1	20	246	123	115	85	4	14	275	14	32	22	246	Rp1	20	246
32	31	82	159	43	115	M6	9	135	100	4	19	296	16	148.0	38.19	30	1/34	268	134	Rc 1 1/4	22	256	128	140	100	4	18	286	16	40	26	256	Rp1 1/4	22	306
40	40	100	250	43	115	-	-	140	105	4	19	379	16	189.5	48.21	37	1/37	356	178	Rc 1 1/2	25	330	165	150	110	4	18	367	16	50	31	331	Rp1 1/2	25	330
50	51	106	250	43	125	-	-	155	120	4	19	395	16	197.5	60.25	42	1/37	380	190	Rc 2	28	358	179	165	125	4	18	395	16	63	38	388.2	Rp2	28	358

■ ANSI (Unit: inch)

									ANSI														
									FLANGED ANSI CLASS 150							SOCKET				THREADED			
inch	mm	d	D1	H	H1	S1	S2	S3	D	C	n	h	L	t	d1	d1'	ℓ	L	d2	ℓ	L		
1/2	15	0.59	1.89	4.72	0.79	3.54	M6	0.35	3.50	2.38	4	0.62	8.70	0.47	0.848	0.836	0.875	7.52	1/2 -14NPT	0.59	7.09		
3/4	20	0.79	2.36	4.72	0.79	3.94	M6	0.35	3.88	2.75	4	0.62	9.92	0.55	1.058	1.046	1.000	8.23	3/4 -14NPT	0.67	7.87		
1	25	0.98	2.76	6.89	1.06	3.94	M6	0.35	4.25	3.12	4	0.62	11.89	0.55	1.325	1.310	1.125	10.24	1 -11 1/2NPT	0.79	9.69		
1 1/4	32	1.22	3.23	6.26	1.69	4.53	M6	0.35	4.62	3.5	4	0.62	11.65	0.63	1.670	1.655	1.250	10.63	1 1/4 -11 1/2NPT	0.87	10.08		
1 1/2	40	1.57	3.94	9.84	1.69	4.53	-	-	5.00	3.88	4	0.62	14.92	0.63	1.912	1.894	1.375	13.82	1 1/2 -11 1/2NPT	0.98	12.99		
2	50	2.01	4.17	9.84	1.69	4.92	-	-	6.00	4.75	4	0.75	15.55	0.63	2.387	2.369	1.500	14.57	2- 11 1/2NPT	1.10	14.09		

SELF CONTROL VALVE PRESSURE RETAINING TYPE

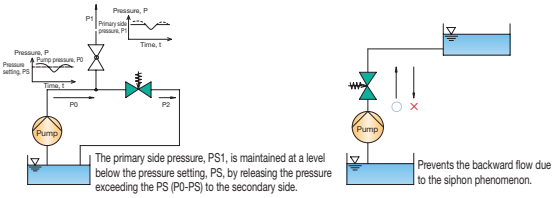

The pressure retaining type maintains the primary side pressure constant.
The valve opens when the primary side pressure exceeds the set value and closes when the pressure falls below the set value.
It works using the fluid pressure only, without using any auxiliary power.
Against the fluid power pressing up the diaphragm, the valve uses the force of compression spring to press down the diaphragm so as to keep balance.
For appropriate flow range, see P.237.

BASIC SPECIFICATIONS

VALVE TYPE——SELF CONTROL VALVE PRESSURE RETAINING TYPE
SIZE——15 mm–50 mm (1/2 inch–2 inch)
BODY MATERIAL——U-PVC
SEAL MATERIAL——EPDM etc.
CONNECTION / FLANGED——JIS, DIN, ANSI
SOCKET——JIS, DIN, ANSI
THREADED——Rc, RP, NPT
WORKING TEMPERATURE RANGE – 0-50℃
MAX.ALLOWABLE WORKING PRESSURE – 1.0MPa
ALLOWABLE PRESSURE RANGE – 0.05-0.9MPa
HIGH PURITY SERIES —— WETTED PARTS LUBRICANT FREE

MANUAL



PRODUCT MODEL CODE LIST
MANUAL

ACTUATION	TYPE	OPERATING SYSTEM	BODY MATERIAL	SEAL MATERIAL	CONNECTION	STANDARD	SIZE	HIGH PURITY SERIES
V	PR	6T	U	*	*	*	***	2
V MANUAL VALVE	PR SELF CONTROL	6T PRESSURE RETAINING TYPE	U U-PVC	E EPDM Z FKM (PTFE coating)	S SOCKET N THREADED F FLANGED	J JIS 1 JIS10K D DIN A ANSI	015 15mm ~ 050 50mm	2 WETTED PARTS LUBRICANT FREE

TYPE What should be filled in the "xxx" section?

MANUAL

SELF CONTROL VALVE PRESSURE RETAINING TYPE

CONNECTION / FLANGED, SOCKET——JIS, DIN, ANSI THREADED——Rc, RP, NPT

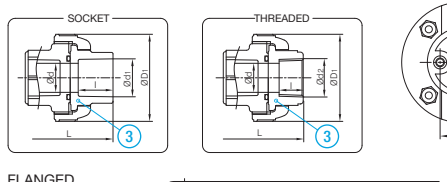

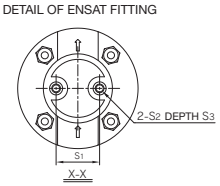

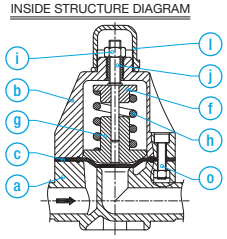

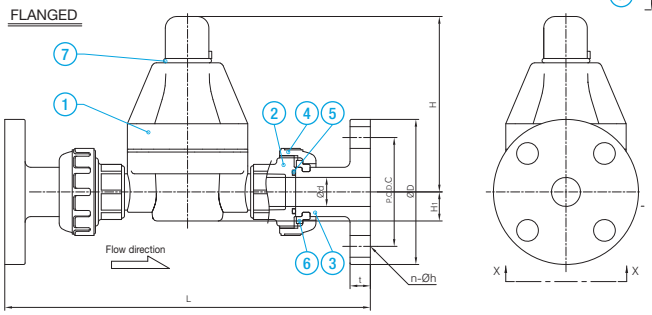

PART NO. / NAME	QTY	MATERIAL	MEMO
(a) BODY	1	U-PVC	
(b) HOUSING	1	U-PVC	
(c) DIAPHRAGM	1	□EPDM, □FKM-PTFE COATING	
(f) SPRING PLATE	1	ALUMINUM	
(g) COMPRESSOR	1	PP	
(h) COMPRESSION SPRING	1	Spring steel	
(i) LOCK NUT	1	Polyamide	
(j) ADJUSTING SCREW	1	—	
(l) CAP	1	Polystyrene	
(o) BOLT, WASHER, NUT	4	—	
(2) PJ-BODY	2	U-PVC	SELF CONTROL VALVE DEDICATED FOR TRUE UNION
(3) END CONNECTOR	2	U-PVC	
(4) UNION NUT	2	U-PVC	
(5) O-RING (C)	2	EPDM(FKM*)	
(6) STOP RING	2	PVDF	Used for flanged type.
(7) O-RING (D)	1	EPDM	

* When the diaphragm is FKM with PTFE coating.

■ JIS, DIN (Unit: mm)

								JIS												DIN											
								FLANGED						SOCKET				THREADED			FLANGED DIN PN10/PN16						SOCKET			THREADED		
mm	d	D1	H	H1	S1	S2	S3	D	C	n	h	L	t	d1	ℓ	1/T	L	d2	ℓ	L	D	C	n	h	L	t	d1	ℓ	L	d2	ℓ	L
15	15	48	120	20	29	M6	16	95	70	4	15	221	12	22.11	20	1/34	186	Rc 1/2	15	180	95	65	4	14	208	12	20	16	180	Rp1/2	15	180
20	20	60	120	20	29	M6	16	100	75	4	15	252	14	26.13	24	1/34	208	Rc 3/4	17	200	105	75	4	14	230	14	25	19	199	Rp3/4	17	240
25	25	70	175	27	47	M6	17	125	90	4	19	302	14	32.16	27	1/34	260	Rc 1	20	246	115	85	4	14	275	14	32	22	246	Rp1	20	246
32	31	82	159	43	47	M6	17	135	100	4	19	296	16	38.19	30	1/34	268	Rc 1 1/4	22	256	140	100	4	18	286	16	40	26	256	Rp1 1/4	22	306
40	40	100	250	43	-	-	-	140	105	4	19	379	16	48.21	37	1/37	356	Rc 1 1/2	25	330	150	110	4	18	367	16	50	31	331	Rp1 1/2	25	330
50	51	106	250	43	-	-	-	155	120	4	19	395	16	60.25	42	1/37	380	Rc 2	28	358	165	125	4	18	395	16	63	38	388.2	Rp2	28	358

■ ANSI (Unit: inch)

									ANSI													
									FLANGED ANSI CLASS 150						SOCKET				THREADED		
inch	mm	d	D1	H	H1	S1	S2	S3	D	C	n	h	L	t	d1	d1'	ℓ	L	d2	ℓ	L
1/2	15	0.59	1.89	4.72	0.79	1.14	M6	0.63	3.50	2.38	4	0.62	8.70	0.47	0.848	0.836	0.875	7.52	1/2 -14NPT	0.59	7.09
3/4	20	0.79	2.36	4.72	0.79	1.14	M6	0.63	3.88	2.75	4	0.62	9.92	0.55	1.058	1.046	1.000	8.23	3/4 -14NPT	0.67	7.87
1	25	0.98	2.76	6.89	1.06	1.85	M6	0.67	4.25	3.12	4	0.62	11.89	0.55	1.325	1.310	1.125	10.24	1 -11 1/2NPT	0.79	9.69
1 1/4	32	1.22	3.23	6.26	1.69	1.85	M6	0.67	4.62	3.5	4	0.62	11.65	0.63	1.670	1.655	1.250	10.63	1 1/4 -11 1/2NPT	0.87	10.08
1 1/2	40	1.57	3.94	9.84	1.69	-	-	-	5.00	3.88	4	0.62	14.92	0.63	1.912	1.894	1.375	13.82	1 1/2 -11 1/2NPT	0.98	12.99
2	50	2.01	4.17	9.84	1.69	-	-	-	6.00	4.75	4	0.75	15.55	0.63	2.387	2.369	1.500	14.57	2- 11 1/2NPT	1.10	14.09

GAUGE VALVE

- THE WETTED PART MADE OF CORROSION-RESISTANT PLASTIC. SEALING WITH DIAPHRAGM.
- EASY TO SET, ONLY REQUIRING THE GAUGE PIPE AND TIGHTENING THE UNION NUT.
- EQUIPPED WITH DRAIN PLUG USEFUL FOR MAINTENANCE (ALLOWING FOR COLLECTION OF SAMPLE SOLUTION).

■ The top of the gauge pipe can be fixed using a flanged elbow. (25 mm only. See the figure below.)

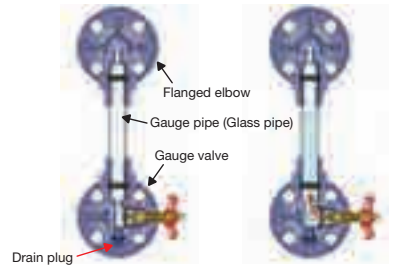

[Fully closed state] [Fully open state]

BASIC SPECIFICATIONS

VALVE TYPE——GAUGE VALVE
SIZE——20 mm, 25 mm (3/4 inch, 1 inch)
BODY MATERIAL——U-PVC PP
SEAL MATERIAL / O RING——EPDM PTFE etc.
CONNECTION / FLANGED——JIS10K, DIN, ANSI

- O.D. OF GAUGE PIPE (GLASS PIPE) MEETS ϕ18 FOR 20mm, ϕ26 FOR 25mm.
- SCREW OF DRAIN PLUG IS G1/4 FOR 20mm AND 25mm.

	FLUID TEMPERATURE	MAXIMUM WORKING PRESSURE (NORMAL TEMPERATURE) MPa{kgf/cm²}
U-PVC	0℃～40℃	0.5 {5.1}
	41℃～50℃	0.4 {4.1}
	51℃～80℃	—
PP	0℃～40℃	0.5 {5.1}
	41℃～50℃	0.4 {4.1}
	51℃～80℃	0.3 {3.1}

NOTE The maximum working pressure is the value including the water hammer pressure. Be careful that the maximum working pressure is not exceeded during use.
* Concerning the allowable pressure for each temperature and material, see the technical documents at the end of this catalog.

MANUAL



MANUAL

GAUGE VALVE

CONNECTION / FLANGED——JIS, DIN, ANSI

Gauge valve JIS 10K: 20 mm (3/4 inch)

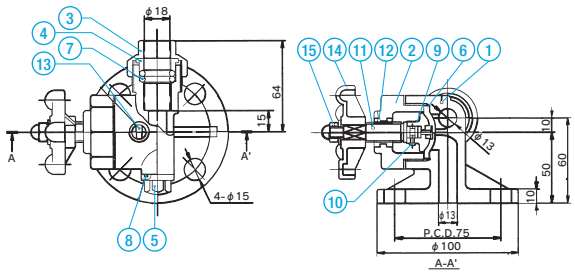

Gauge valve JIS 10K: 25 mm (1 inch)

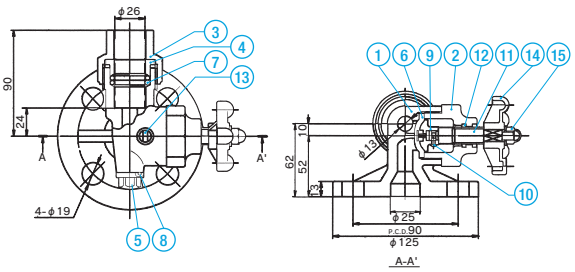

Flanged elbow JIS 10K: 25 mm (1 inch)

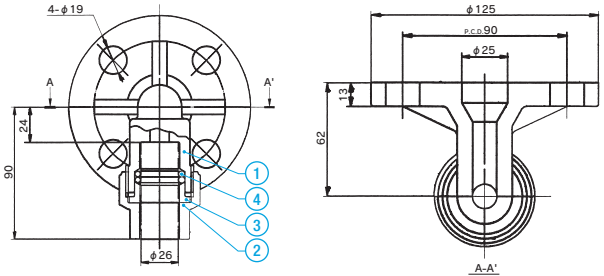

PART NO. / NAME	QTY	MATERIAL
① BODY	1	U-PVC, PP
② BONNET	1	U-PVC, PP
③ UNION NUT	1	U-PVC, PP
④ PACKING GLAND	1	U-PVC, PP
⑤ DRAIN PLUG	1	U-PVC, PP
⑥ DIAPHRAGM	1	EPDM, PTFE, etc.
⑦ O-RING (A)	2	EPDM, PTFE, etc.
⑧ O-RING (B)	1	EPDM, PTFE, etc.

PART NO. / NAME	QTY	MATERIAL
⑨ COMPRESSOR	1	PVDF
⑩ COMPRESSOR PIN	2	SUS304
⑪ STEM	1	C3604
⑫ EMBEDDED BONNET FITTING	1	C3604
⑬ MATERIAL INDICATION SHEET	1	Silver label
⑭ HANDLE	1	PP
⑮ NUT	1	SUS304

NOTE When the diaphragm material is PTFE, the O-ring material is also PTFE.

■ JIS, DIN (Unit: mm)

									JIS10K				DIN PN10			
mm	d	L1	L2	L3	L4	L5	t	d1	D	C	n	h	D	C	n	h
20	13	60	64	50	10	15	10	18	100	75	4	15	105	75	4	14
25	25	62	90	52	10	24	13	26	125	90	4	19	115	85	4	14

■ ANSI (Unit: inch)

										ANSI Class150			
inch	mm	d	L1	L2	L3	L4	L5	t	d1	D	C	n	h
3/4	20	0.51	2.36	2.52	1.97	0.39	0.59	0.39	0.71	3.88	2.75	4	0.62
1	25	0.98	2.44	3.54	2.05	0.39	0.94	0.51	1.02	4.25	3.12	4	0.62

SEDIMENT STRAINER (TYPE Y)

- MATERIAL WITH HIGH RESISTANCE TO CORROSION, CHEMICALS AND WEAR.
- TRANSPARENT BODY THAT ALLOWS FOR CHECKING OF INSIDE FLOW.
- EASY SCREEN CLEANING, DISASSEMBLY/ASSEMBLY FOR REPLACEMENT AND MAINTENANCE.

MANUAL



BASIC SPECIFICATIONS

VALVE TYPE——**SEDIMENT STRAINER (TYPE Y)**
SIZE——**15 mm–100 mm (1/2 inch–4 inch)**
BODY MATERIAL——**U-PVC**
SEAL MATERIAL——**EPDM** **FKM** **etc.**
CONNECTION / FLANGED——**JIS5K, JIS10K, DIN, ANSI**
SOCKET——**JIS, DIN, ANSI**
THREADED——**Rc, Rp, NPT**

	FLUID TEMPERATURE	MAXIMUM WORKING PRESSURE (NORMAL TEMPERATURE) MPa{kgf/cm²}		CONNECTION METHOD		
		15mm–50mm	65mm–100mm	FLANGED	SOCKET	THREADED
U-PVC	0℃ ~ 50℃	1.0 {10.2}	0.6 {6.1}	○	○	○

NOTE For information on chemical resistance, contact our sales office.

NOTES ● Avoid direct sunlight and store it indoors. Also avoid storing the valve in a place that may be exposed to high temperatures. ● Pay attention to the direction of flow when mounting the product on a pipe. (It is indicated by an arrow on the valve parts.) ● Clean the screen periodically. (Handle the screen with utmost care during cleaning.) ● Make sure during piping work that the valve is not exposed to direct sunlight. ● Note that volatile liquids, such as hydrogen peroxide solution (H_2O_2) and sodium hypochlorite (NaClO), may cause abnormal pressure increase in strainer. (When the internal pressure abnormally increases due to vaporization, the gas becomes compressive fluid. If the valve breaks in this state, it will be very dangerous, causing explosion and scattering of fragments.) ● The Y-shaped strainer, in particular, has such a structure that the corners are susceptible to the effects of repeated stress due to internal variations. Therefore, for lines where pulsation (including air hammer and water hammer) may occur, take adequate measures during piping installation. Otherwise breakage may occur. Also, perform periodic check (approx. once a year). ● Piping lines made of copper require particular attention because the effects of stress such as internal fluctuations are concentrated on the Y-shaped strainer.



PRODUCT MODEL CODE LIST

MANUAL

ACTUATION	TYPE	MESH TYPE	BODY MATERIAL	SEAL MATERIAL	CONNECTION	STANDARD	SIZE
V	YS	**	U	*	*	*	***
V MANUAL VALVE	YS SEDIMENT STRAINER (TYPE Y)	2U 20MESH 3U 30MESH 4U 40MESH	U U-PVC	E EPDM V FKM	S SOCKET N THREADED F FLANGED	J JIS 1 JIS10K 5 JIS 5K	015 15mm ~ 100 100mm

PARTS LIST MANUAL

FLANGED

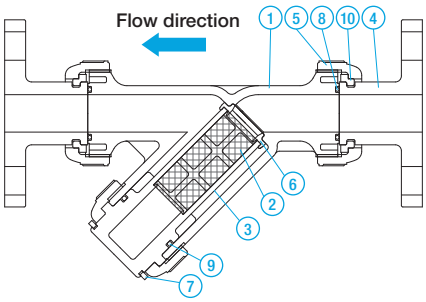

SOCKET

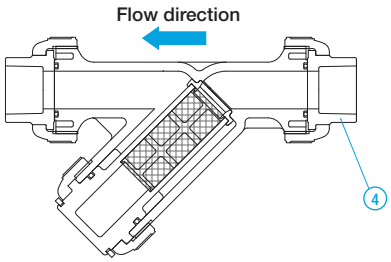

THREADED

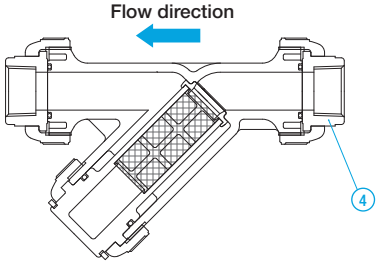

PART NO. / NAME	QTY	MATERIAL
①BODY	1	U-PVC (transparent)
②SCREEN (1)	1	U-PVC
③SCREEN SUPPORT	1	U-PVC
④END CONNECTOR	2	U-PVC
⑤UNION NUT	3	U-PVC

PART NO. / NAME	QTY	MATERIAL
⑥RETAINING RING	1	U-PVC
⑦SPLIT RING	1	U-PVC
⑧O-RING (A)	2	EPDM, FKM, etc.
⑨O-RING (B)	1	
⑩STOP RING (2)	2	PVDF

NOTES (1) 40 mesh : standard 30/20/60 mesh: custom-build *60 mesh: U-PVC (20 mesh) + PVDC (60 mesh) *For Stainless Steel mesh, consult us.
(2) Flanged type only.

MANUAL

SEDIMENT STRAINER (TYPE Y)

CONNECTION / FLANGED, SOCKET——JIS, DIN, ANSI THREADED——Rc, Rp, NPT

FLANGED

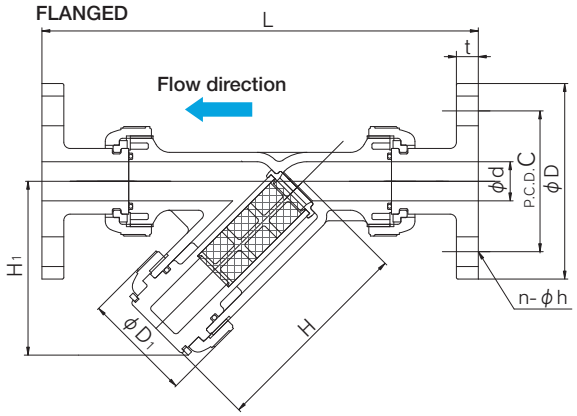

SOCKET

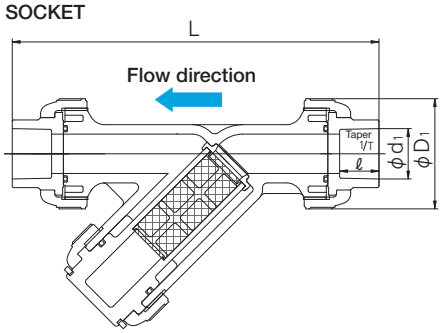

THREADED

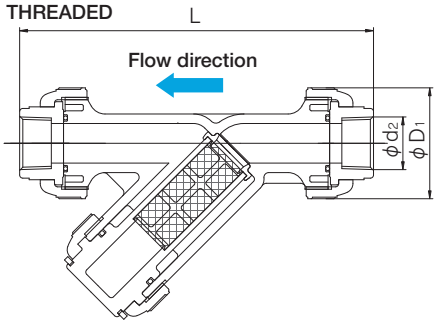

■ JIS, DIN (Unit: mm)

JIS																						
mm	d	D1	H	H1	H2	FLANGED										SOCKET				THREADED		
						JIS 5K				JIS 10K				L	t	d1	ℓ	1/T	L	d2	ℓ	L
						D	C	n	h	D	C	n	h									
15	15	48	97	78	134	80	60	4	12	95	70	4	15	206	12	22.11	20	1/34	172	Rc 1/2	15	165
20	20	60	120	98	168	85	65	4	12	100	75	4	15	254	14	26.13	24	1/34	210	Rc 3/4	17	202
25	25	70	133	111	189	95	75	4	12	125	90	4	19	280	14	32.16	27	1/34	238	Rc 1	20	224
32	40	100	177	149	256	115	90	4	15	135	100	4	19	336	16	38.19	30	1/34	298	Rc 1 1/4	22	287
40	40	100	177	149	256	120	95	4	15	140	105	4	19	336	16	48.21	37	1/37	313	Rc 1 1/2	25	287
50	51	106	190	160	277	130	105	4	15	155	120	4	19	361	16	60.25	42	1/37	346	Rc 2	28	324
65	78	140	271	234	399	155	130	4	15	175	140	4	19	477	18	76.60	61	1/48	487	Rc 2 1/2	32	436
80	78	152	271	234	399	180	145	4	19	185	150	8	19	477	18	89.60	64	1/49	487	Rc 3	35	436
100	100	210	361	316	537	200	165	8	19	210	175	8	19	608	18	114.70	64	1/56	653	Rc 4	45	596

DIN													
mm	FLANGED DIN PN10						SOCKET			THREADED		
	D	C	n	h	L	t	d1	ℓ	L	d1	ℓ	L
15	95	65	4	14	193	12	20	16	165	Rp 1/2	15	165
20	105	75	4	14	232	14	25	19	201	Rp 3/4	17	202
25	115	85	4	14	253	14	32	22	224	Rp 1	20	224
32	140	100	4	18	336	16	40	26	298	Rp 1 1/4	22	287
40	150	110	4	18	324	16	50	31	288	Rp 1 1/2	25	287
50	165	125	4	18	361	16	63	38	337	Rp 2	28	324
65	185	145	4	18	477	18	75	44	455	Rp 2 1/2	32	436
80	200	160	8	18	483	18	90	51	457	Rp 3	35	436
100	220	180	8	18	608	18	110	61	607	Rp 4	45	596

■ ANSI (Unit: inch)

ANSI																					
inch	mm	d	D1	H	H1	H2	FLANGED						SOCKET				THREADED		
							ANSI CLASS150						ASTM SCH80				d2	ℓ	L
							C	D	n	h	L	t	d1	d1'	ℓ	L			
1/2	15	0.59	1.89	3.82	3.07	5.28	3.50	2.38	4	0.62	8.11	0.47	0.848	0.836	0.875	6.93	1/2-14 NPT	0.59	6.50
3/4	20	0.79	2.36	4.72	3.86	6.61	3.88	2.75	4	0.62	10.00	0.55	1.058	1.046	1.000	8.31	3/4-14 NPT	0.67	7.95
1	25	0.98	2.76	5.24	4.37	7.44	4.25	3.12	4	0.62	11.02	0.55	1.325	1.310	1.125	9.37	1-11 1/2 NPT	0.79	8.82
1 1/4	32	1.57	3.94	6.97	5.87	10.08	4.61	3.50	4	0.62	13.23	0.63	1.670	1.655	1.250	11.73	1 1/4-11 1/2 NPT	0.87	11.30
1 1/2	40	1.57	3.94	6.97	5.87	10.08	5.00	3.88	4	0.62	13.23	0.63	1.912	1.894	1.375	12.13	1 1/2-11 1/2 NPT	0.98	11.30
2	50	2.01	4.17	7.48	6.30	10.91	6.00	4.75	4	0.75	14.21	0.63	2.387	2.369	1.500	13.31	2-11 1/2 NPT	1.10	12.76
2 1/2	65	3.07	5.51	10.67	9.21	15.71	7.01	5.49	4	0.75	18.78	0.71	2.889	2.868	1.752	17.95	2 1/2-8 NPT	1.26	17.17
3	80	3.07	5.98	10.67	9.21	15.71	7.50	6.00	4	0.75	18.78	0.71	3.516	3.492	1.875	17.83	3-8 NPT	1.38	17.17
4	100	3.94	8.27	14.21	12.44	21.14	9.00	7.50	8	0.75	23.94	0.71	4.518	4.491	2.000	23.07	4-8 NPT	1.77	23.46

GATE VALVE STANDARD TYPE (TYPE P) INSIDE SCREW CAP TYPE

- FOR ALL THE WETTED PARTS, CORROSION-RESISTANT MATERIAL IS USED.
- LIGHTWEIGHT AND HIGHLY IMPACT RESISTANT.
- MADE OF ROBUST, LIGHTWEIGHT AND IMPACT-RESISTANT HARD VINYL CHLORIDE (HI-PVC), WITH A WEIGHT OF 1/3 TO 1/5 COMPARED TO METAL VALVES.
- COMPACT DESIGN ALLOWS FOR SHALLOW DEPTH MOUNTING (SIZE: 32 - 200 mm).

BASIC SPECIFICATIONS

VALVE TYPE——————**GATE VALVE STANDARD TYPE (TYPE P) INSIDE SCREW CAP TYPE**

SIZE ——————————**32 mm—350 mm (1 1/4 inch—14 inch)**

BODY MATERIAL ————**HI-PVC**

SEAL MATERIAL / O RING ——**EPDM etc.**

CONNECTION / FLANGED ——**JIS10K, DIN, ANSI**

THREADED—Rc, Rp, NPT

	FLUID TEMPERATURE	MAXIMUM WORKING PRESSURE (NORMAL TEMPERATURE) MPa{kgf/cm²}			CONNECTION METHOD	
		32mm—200mm	250mm	300 mm•350 mm	FLANGED	THREADED
HI-PVC	-10℃～50℃	1.0{10.2}	0.75{7.7}	0.5{5.1}	○	○

NOTES The maximum working pressure is the value including the water hammer pressure. Be careful that the maximum working pressure is not exceeded during use.
* Concerning the allowable pressure for each temperature and material, see the technical documents at the end of this catalog.

MANUAL



PARTS LIST MANUAL

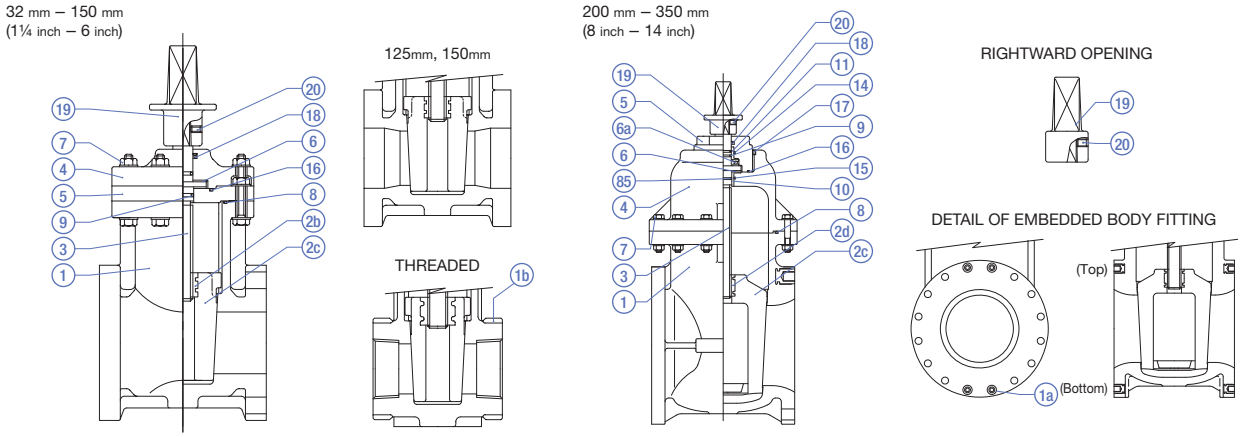

PART NO. / NAME	QTY	MATERIAL
①BODY	1	HI-PVC
①a EMBEDDED BODY FITTING (1)	-	C3604
①b RING (2)	1 SET	STPG
②c GATE (BODY) (A)	1	PP
②d GATE (BODY) EMBEDDED FITTING (A)	1	BC6
③STEM	1	SUS403
④BONNET (LID) (A)	1	HI-PVC
⑤BONNET (LID) (B)	1	HI-PVC

PART NO. / NAME	QTY	MATERIAL
⑥THRUST RING(3)	1 set / 1	PP
⑥a THRUST BEARING(1)	1	SUJ2
⑦BOLT/NUT	—	SUS304
⑧O-RING (B)	1	EPDM, etc.
⑨O-RING (C)	2	EPDM, etc.
⑩BUSH (A)(1)	1	PP
⑪BUSH (B)(1)	1	PP
⑭O-RING (E)(1)	1	EPDM, etc.

PART NO. / NAME	QTY	MATERIAL
⑮O-RING (F)(1)	1	EPDM, etc.
⑯O-RING (D)	1	EPDM, etc.
⑰SET SCREW (A)(1)	1	SUS304
⑱DUST SEAL	1	EPDM
⑲CAP (A)	1	FC200 (EPOXY RESIN POWDER COATING)
⑳SET SCREW (B)	1	SUS304

NOTES (1) is used for sizes of 200 mm or more (2) is used for threaded type (epoxy paint after unichrome plating).
(3) The quantity of use is 1 set (2 pieces) for 150 mm or less and 1 piece for 200 mm or more.

PRODUCT MODEL CODE LIST

MANUAL

ACTUATION	TYPE	OPERATING SYSTEM	STEM MATERIAL / OPEN DIRECTION	BODY MATERIAL	SEAL MATERIAL	CONNECTION / STANDARD	SIZE
V	CG	C	*	I	E	*	***

- ACTUATION: V MANUAL VALVE
- TYPE: CG STANDARD TYPE
- OPERATING SYSTEM: C TOP CAP
- STEM MATERIAL / OPEN DIRECTION: R SUS, RIGHT; L SUS, LEFT
- BODY MATERIAL: I HI-PVC
- SEAL MATERIAL: E EPDM
- CONNECTION / STANDARD: F1 FLANGED, 10K; FD FLANGED, DIN; FW FLANGED, WATERWORKS; FA FLANGED, ANSI; NJ THREADED, JIS; ND THREADED, DIN; NA THREADED, ANSI
- SIZE: 032 32mm ~ 350 350mm

NOTES
- Tapping type is the standard for all the cases.
- The price above is the set price for the valve, full-face gaskets (2 pcs), and SUS plain washer.
- The product model code of size 80 mm compatible with the waterworks standard is "075".
- For those compatible with the waterworks standard, size 32 mm and 65 mm are not available.

MANUAL

GATE VALVE STANDARD TYPE (TYPE P) INSIDE SCREW CAP TYPE

TYPE——VCGC

CONNECTION / FLANGED——JIS, DIN, ANSI THREADED——Rc, Rp, NPT

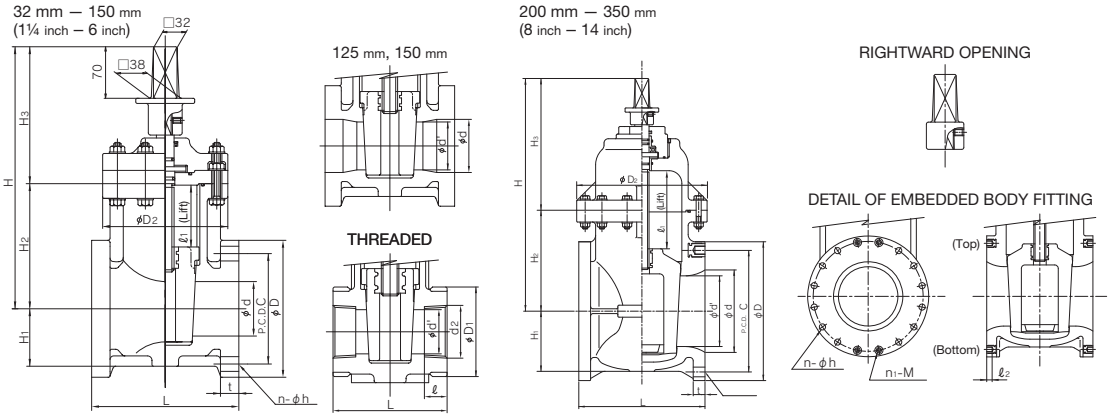

■ JIS, DIN (Unit: mm)

mm	d	d'	D2	ℓ1	H	H1	H2	H3	JIS FLANGED JIS 10K D	C	n	h	n1	M	L	t	JIS FLANGED WATERWORKS D	C	n	h	n1	M	L	t	JIS THREADED D1	d2	ℓ	L
32	40	30	120	49	268	50	107	161	135	100	4	19	–	–	165	22	–	–	–	–	–	–	–	–	90	Rc 1 1/4	22	115
40	40	–	120	49	268	50	107	161	140	105	4	19	–	–	165	22	–	–	–	–	–	–	–	–	90	Rc 1 1/2	25	115
50	50	–	130	60	299	58	134	165	155	120	4	19	–	–	180	23	–	–	–	–	–	–	–	–	102	Rc 2	28	130
65	65	–	155	75	321	68	152	169	175	140	4	19	–	–	190	24	–	–	–	–	–	–	–	–	–	–	–	–
75(80)	75	–	170	85	357	77	170	187	185	150	8	19	–	–	200	25	–	–	–	–	–	–	–	–	–	–	–	–
100	100	–	195	110	396	89	207	189	210	175	8	19	–	–	230	27	–	–	–	–	–	–	–	–	–	–	–	–
125	125	110	235	117	427	89	227	200	250	210	8	23	–	–	260	27	–	–	–	–	–	–	–	–	–	–	–	–
150	150	130	270	138	466	102	263	203	280	240	8	23	–	–	270	28	–	–	–	–	–	–	–	–	–	–	–	–
200	196	168	310	180	555	143	240	315	330	290	10	23	2	M20	290	28	–	–	–	–	–	–	–	–	–	–	–	–
250	247	210	360	226	675	175	270	405	400	355	12	25	–	–	380	30	–	–	–	–	–	–	–	–	–	–	–	–
300	298	255	410	273	772	195	320	452	445	400	14	25	2	M22	400	31	–	–	–	–	–	–	–	–	–	–	–	–
350	348	297	440	319	875	230	310	565	490	445	12	25	4	M22	430	32	–	–	–	–	–	–	–	–	–	–	–	–

mm	DIN FLANGED DIN PN10 D	C	n	h	n1	M	L	t	DIN THREADED D1	d2	ℓ	L
32	–	–	–	–	–	–	–	–	–	–	–	–
40	150	110	4	18	–	–	165	22	90	Rp 1 1/2	25	115
50	165	125	4	18	–	–	180	23	90	Rp 2	28	130
65	185	145	4	18	–	–	210	24	–	–	–	–
75(80)	200	160	8	18	–	–	240	25	–	–	–	–
100	220	180	8	18	–	–	250	27	–	–	–	–
125	250	210	8	18	–	–	260	27	–	–	–	–
150	285	240	8	22	–	–	280	27	–	–	–	–
200	340	295	6	22	2	M20	300	28	–	–	–	–
250	395	350	12	22	–	–	380	30	–	–	–	–
300	445	400	10	22	2	–	400	31	–	–	–	–
350	505	460	12	22	4	–	430	32	–	–	–	–

■ ANSI (Unit: inch)

inch	mm	d	d'	D2	ℓ1	H	H1	H2	H3	ANSI FLANGED ANSI CLASS150 D	C	n	h	n1	M	L	t	ANSI THREADED d2	ℓ	L
1 1/2	40	1.57	–	4.72	1.93	10.55	1.97	4.21	6.34	5.00	3.88	4	0.62	–	–	6.50	0.87	1 1/2–11 1/2 NPT	0.98	4.53
2	50	1.97	–	5.12	2.36	11.77	2.28	5.28	6.50	6.00	4.75	4	0.75	–	–	7.00	0.91	2–11 1/2 NPT	1.10	5.12
2 1/2	65	2.56	–	6.10	2.95	12.64	2.68	5.98	6.65	7.00	5.50	4	0.75	–	–	7.50	0.94	–	–	–
3	75(80)	2.95	–	6.69	3.35	14.06	3.03	6.69	7.36	7.00	6.00	4	0.75	–	–	8.00	0.98	–	–	–
4	100	3.94	–	7.68	4.33	15.59	3.50	8.15	7.44	9.00	7.50	8	0.75	–	–	9.00	1.06	–	–	–
5	125	4.92	4.33	9.25	4.61	16.81	3.50	8.94	7.87	10.00	8.50	8	0.88	–	–	10.24	1.06	–	–	–
6	150	5.91	5.12	10.63	5.43	18.35	4.02	10.35	7.99	11.00	9.50	8	0.88	–	–	10.50	1.06	–	–	–
8	200	7.72	6.61	12.20	7.09	21.85	5.63	9.45	12.40	13.50	11.75	6	0.88	2	W 3/4	11.50	1.30	–	–	–
10	250	9.72	8.27	14.17	8.90	26.57	6.89	10.63	15.94	16.00	14.25	12	1.00	–	–	14.96	1.18	–	–	–
12	300	11.73	10.04	16.14	10.75	30.39	7.68	12.60	17.80	19.00	17.00	10	1.00	2	W7/8	15.75	1.22	–	–	–
14	350	13.70	11.69	17.32	12.56	34.45	9.06	12.20	22.24	21.00	18.75	8	1.12	4	W1	16.93	1.26	–	–	–

GATE VALVE STANDARD TYPE (TYPE P) INSIDE SCREW ROUND HANDLE TYPE

- EQUIPPED WITH OPENING INDICATOR UNDER THE HANDLE TO ALLOW FOR EASY CHECK OF OPENING DEGREE OF THE VALVE.
- FOR ALL THE WETTED PARTS, CORROSION-RESISTANT MATERIAL IS USED.
- MADE OF ROBUST, LIGHTWEIGHT AND IMPACT-RESISTANT HARD VINYL CHLORIDE (HI-PVC), WITH A WEIGHT OF 1/3 TO 1/5 COMPARED TO METAL VALVES.

NOTES (1) For the round handle type, directly hold the round handle when opening or closing the valve. If a turning bar or similar tool is used to open or close the valve, the handle will be broken.
(2) Concerning the flanged type compatible with the waterworks and JIS10K standards, the products of sizes of 40 to 150 mm are registered as valves certified by the Quality Certification Center, Japan Water Works Association.

BASIC SPECIFICATIONS

VALVE TYPE——————**GATE VALVE STANDARD TYPE (TYPE P) INSIDE SCREW ROUND HANDLE TYPE**

SIZE——————**32 mm—350 mm (1 1/4 inch—14 inch)**

BODY MATERIAL——————**HI-PVC**

SEAL MATERIAL / O-RING——**EPDM etc.**

CONNECTION / FLANGED——**JIS5K, JIS10K, DIN, ANSI**

THREADED—**Rc, Rp, NPT**

	FLUID TEMPERATURE	MAXIMUM WORKING PRESSURE (NORMAL TEMPERATURE) MPa{kgf/cm²}			CONNECTION METHOD	
		32mm—200mm	250mm	300 mm•350 mm	FLANGED	THREADED
HI-PVC	-10℃～50℃	1.0{10.2}	0.75{7.7}	0.5{5.1}	○	○

NOTES The maximum working pressure is the value including the water hammer pressure. Be careful that the maximum working pressure is not exceeded during use.
* Concerning the allowable pressure for each temperature and material, see the technical documents at the end of this catalog.

MANUAL



PARTS LIST MANUAL

32 mm – 150mm (1¼ inch – 6 inch) <Stem: U-PVC>

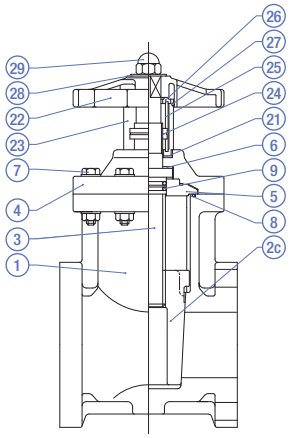

125mm, 150mm

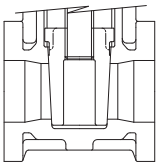

THREADED

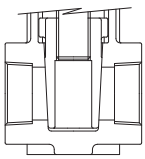

200 mm – 350 mm (8 inch – 14 inch) <Stem: U-PVC>

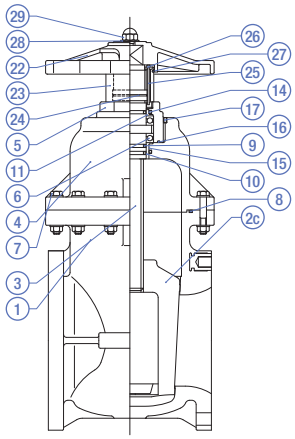

DETAIL OF EMBEDDED BODY FITTING

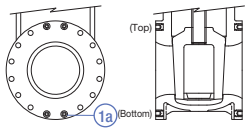

PART NO. / NAME	QTY	MATERIAL
1 BODY	1	HI-PVC
1a EMBEDDED BODY FITTING (1)	—	C3604
2c GATE (BODY) (A)	1	PP
3 STEM	1	U-PVC
4 BONNET (LID) (A)	1	HI-PVC
5 BONNET (LID) (B)	1	HI-PVC
6 THRUST RING 2)	1 SET	PP
6a THRUST BEARING(1)	1 SET	SUJ2
7 BOLT/NUT	—	SUS304

PART NO. / NAME	QTY	MATERIAL
8 O-RING (B)	1	EPDM, etc.
9 O-RING (C)(3)	2·3	EPDM, etc.
10 BUSH (A)(1)	1	PP
11 BUSH (B)(1)	1	PP
14 O-RING (E)(1)	1	EPDM, etc.
15 O-RING (F)(1)	1	EPDM, etc.
16 O-RING (D)(1)	1	EPDM, etc.
17 SET SCREW (A)(1)	1	SUS304
21 PACKING	1	EPDM

PART NO. / NAME	QTY	MATERIAL
22 HANDLE	1	PP
23 OPENING COVER	1	PC
24 OPENING RING	1	U-PVC
25 GUIDE PIN	1	SUS304
26 GUIDE PIN SUPPORT PLATE	1	U-PVC
27 O-RING (G)	1	EPDM
28 WASHER	1	U-PVC
29 UNION NUT	1	SUS304

NOTES (1) is used for sizes of 200 mm or more (2) is used for sizes of 150 mm or less. (3) The quantity of use is 2 pieces for 150 mm or less and 3 pieces for 200 mm or more.
* The parts list above is applicable when the stem is made of U-PVC.

PRODUCT MODEL CODE LIST

MANUAL

ACTUATION	TYPE	OPERATING SYSTEM	STEM MATERIAL / OPEN DIRECTION	BODY MATERIAL	SEAL MATERIAL	CONNECTION / STANDARD	SIZE
V	CG	M	*	I	E	*	***
V MANUAL VALVE	CG GATE	M ROUND HANDLE	J RESIN, LEFT R SUS, RIGHT	I HI-PVC	E EPDM	F1 FLANGED, 10K FD FLANGED, DIN FA FLANGED, ANSI NJ THREADED	032 32mm ~ 350 350mm

NOTES
- The SUS stem type opens only rightward. The resin stem type opens only leftward.
- For 200 to 350 mm, tapping type is the standard.
- The price above is the set price for the valve, full-face gaskets (2 pcs), and SUS plain washer.
- The product model code of size 80 mm compatible with the waterworks standard is "075".
- For the round handle type, resin stems compatible with JIS5K are also available. (40 mm to 150 mm)
- For those compatible with the waterworks standard, size 32 mm and 65 mm are not available.

MANUAL

GATE VALVE STANDARD TYPE (TYPE P) INSIDE SCREW ROUND HANDLE TYPE

TYPE——VCGM

CONNECTION / FLANGED——JIS, DIN, ANSI THREADED——Rc, Rp, NPT

32 mm – 150 mm (1¼ inch – 6 inch) <Stem: U-PVC>

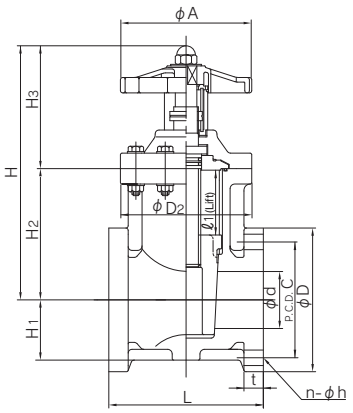

125 mm, 150 mm

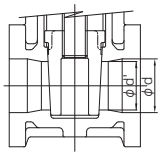

THREADED

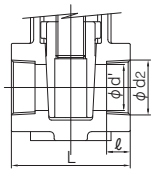

200 mm – 350 mm (8 inch – 14 inch) <Stem: U-PVC>

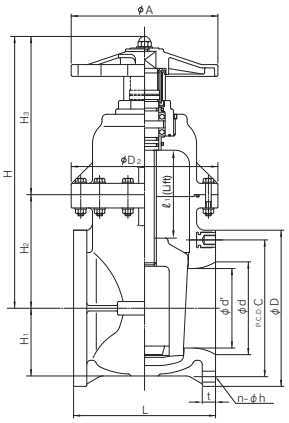

DETAIL OF EMBEDDED BODY FITTING

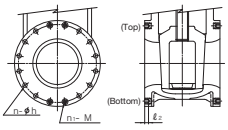

■ JIS, DIN (Unit: mm)

JIS

mm	d	d'	D2	ℓ1	H	H1	H2	H3	A	FLANGED																				THREADED		
										JIS 5K						JIS 10K								WATERWORKS										
										D	C	n	h	L	t	D	C	n	h	n1	M	L	t	D	C	n	h	n1	M	L	t	d2	ℓ	L
32	40	30	120	49	239	50	107	132	120	–	–	–	–	–	–	135	100	4	19	–	–	165	22	–	–	–	–	–	–	–	–	Rc 1 1/4	22	115
40	40	–	120	49	239	50	107	132	120	120	95	4	15	165	22	140	105	4	19	–	–	165	22	–	–	–	–	–	–	–	–	Rc 1 1/2	25	115
50	50	–	130	60	270	58	134	136	130	130	105	4	15	160	23	155	120	4	19	–	–	180	23	–	–	–	–	–	–	–	–	Rc 2	28	130
65	65	–	155	75	302	68	152	150	155	155	130	4	15	170	24	175	140	4	19	–	–	190	24	–	–	–	–	–	–	–	–	–	–	–
75(80)	75	–	170	85	325	77	170	155	170	180	145	4	19	200	25	185	150	8	19	–	–	200	25	–	–	–	–	–	–	–	–	–	–	–
100	100	–	195	110	370	89	207	163	195	200	165	8	19	230	27	210	175	8	19	–	–	230	27	–	–	–	–	–	–	–	–	–	–	–
125	125	110	235	117	407	89	227	180	235	235	200	8	19	260	27	250	210	8	23	–	–	260	27	–	–	–	–	–	–	–	–	–	–	–
150	150	130	270	138	445	102	263	182	270	265	230	8	19	270	28	280	240	8	23	–	–	270	28	–	–	–	–	–	–	–	–	–	–	–
200	196	168	310	180	577	143	240	337	310	–	–	–	–	–	–	330	290	10	23	2	M20	290	28	–	–	–	–	–	–	–	–	–	–	–
250	247	210	360	226	690	175	270	420	360	–	–	–	–	–	–	400	355	12	25	–	–	380	30	–	–	–	–	–	–	–	–	–	–	–
300	298	255	410	273	800	195	320	480	410	–	–	–	–	–	–	445	400	14	25	2	M22	400	31	–	–	–	–	–	–	–	–	–	–	–
350	348	297	440	319	910	230	310	600	455	–	–	–	–	–	–	490	445	12	25	4	M22	430	32	–	–	–	–	–	–	–	–	–	–	–

DIN

mm	FLANGED								THREADED			
	DIN PN10								D1	d2	ℓ	L
	D	C	n	h	n1	M	L	t				
32	–	–	–	–	–	–	–	–	–	–	–	–
40	150	110	4	18	–	–	165	22	90	Rp 1 1/2	25	115
50	165	125	4	18	–	–	180	23	90	Rp 2	28	130
65	185	145	4	18	–	–	210	24	–	–	–	–
75(80)	200	160	8	18	–	–	240	25	–	–	–	–
100	220	180	8	18	–	–	250	27	–	–	–	–
125	250	210	8	18	–	–	260	27	–	–	–	–
150	285	240	8	22	–	–	280	27	–	–	–	–
200	340	295	6	22	2	M20	300	28	–	–	–	–
250	395	350	12	22	–	–	380	30	–	–	–	–
300	445	400	10	22	2	–	400	31	–	–	–	–
350	505	460	12	22	4	–	430	32	–	–	–	–

■ ANSI (Unit: inch)

ANSI

inch	mm	d	d'	D2	ℓ1	H	H1	H2	H3	A	FLANGED								THREADED		
											ANSI Class150										
											D	C	n	h	n1	M	L	t	d2	ℓ	L
1 1/2	40	1.57	–	4.72	1.93	9.41	1.97	4.21	5.20	4.72	5.00	3.88	4	0.62	–	–	6.50	0.87	1 1/2–11 1/2 NPT	0.98	4.53
2	50	1.97	–	5.12	2.36	10.63	2.28	5.28	5.35	5.12	6.00	4.75	4	0.75	–	–	7.00	0.91	2–11 1/2 NPT	1.10	5.12
2 1/2	65	2.56	–	6.10	2.95	11.89	2.68	5.98	5.91	6.10	7.00	5.50	4	0.75	–	–	7.50	0.94	–	–	–
3	75(80)	2.95	–	6.69	3.35	12.80	3.03	6.69	6.10	6.69	7.00	6.00	4	0.75	–	–	8.00	0.98	–	–	–
4	100	3.94	–	7.68	4.33	14.57	3.50	8.15	6.42	7.68	9.00	7.50	8	0.75	–	–	9.00	1.06	–	–	–
5	125	4.92	4.33	9.25	4.61	16.02	3.50	8.94	7.09	9.25	10.00	8.50	8	0.88	–	–	10.24	1.06	–	–	–
6	150	5.91	5.12	10.63	5.43	17.52	4.02	10.35	7.17	10.63	11.00	9.50	8	0.88	–	–	10.50	1.06	–	–	–
8	200	7.72	6.61	12.20	7.09	22.72	5.63	9.45	13.27	12.20	13.50	11.75	6	0.88	2	W 3/4	11.50	1.30	–	–	–
10	250	9.72	8.27	14.17	8.90	27.17	6.89	10.63	16.54	14.17	16.00	14.25	12	1.00	–	–	14.96	1.18	–	–	–
12	300	11.73	10.04	16.14	10.75	31.50	7.68	12.60	18.90	16.14	19.00	17.00	10	1.00	2	W7/8	15.75	1.22	–	–	–
14	350	13.70	11.69	17.32	12.56	35.83	9.06	12.20	23.62	17.91	21.00	18.75	8	1.12	4	W1	16.93	1.26	–	–	–

GATE VALVE SOFT SEAL TYPE (TYPE S) TYPE 66

- COMPATIBLE WITH THE JAPAN WATER WORKS ASSOCIATION STANDARD (JWWA B125 SYNTHETIC RESIN SOFT SEAL SLUICE VALVE), THE VALVE CAN BE SAFELY USED FOR WATER DISTRIBUTION/SUPPLY. (SIZE: 50 mm, 75 mm, 100 mm, 150 mm)
- EQUIPPED WITH OVER-TIGHTENING PREVENTION MECHANISM TO PREVENT ACCIDENTS DUE TO EXCESSIVE TIGHTENING.
- THE CHANNEL SURFACE FREE FROM IRREGULARITIES ALLOWS FOR SMOOTH FLOW. THE RUBBER SOFT SEAL ENSURES EXCELLENT WATER TIGHTNESS.
- COMPACT DESIGN ALLOWS FOR SHALLOW DEPTH MOUNTING.

BASIC SPECIFICATIONS

VALVE TYPE——GATE VALVE SOFT SEAL TYPE (TYPE S) SOFT SEAL VALVE TYPE 66

SIZE——32 mm—150 mm (1 1/4 inch—6 inch)

BODY MATERIAL——HI-PVC

SEAL MATERIAL / SEAT——SBR / NBR

O-RING——EPDM

CONNECTION / FLANGED——JIS10K, DIN, ANSI

THREADED—Rc, Rp, NPT

	FLUID TEMPERATURE	MAXIMUM WORKING PRESSURE (NORMAL TEMPERATURE) MPa{kgf/cm²}	CONNECTION METHOD FLANGED	THREADED
HI-PVC	-10℃ ~ 50℃	1.0 {10.2}	○	○

NOTES (1) The products of a size of 40 mm are registered as valves certified by the Quality Certification Center, Japan Water Works Association. (2) The maximum working pressure is the value including the water hammer pressure. Be careful that the maximum working pressure is not exceeded during use. (3) 32 mm type is processed from 40 mm.

* Concerning the allowable pressure for each temperature and material, see the technical documents at the end of this catalog.



MANUAL

PARTS LIST MANUAL

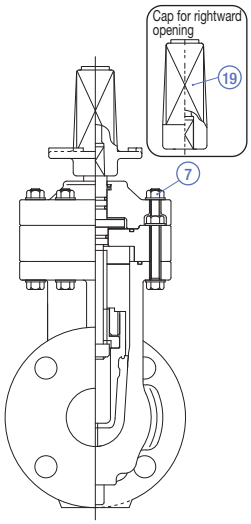

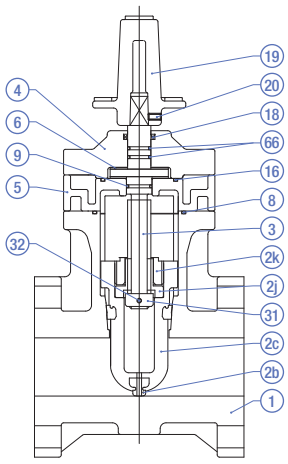

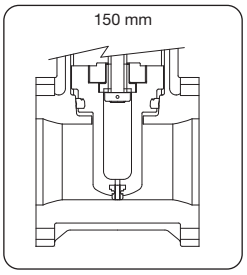

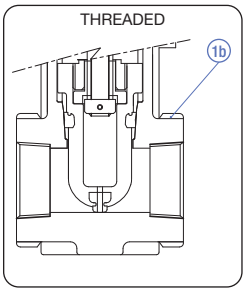

PART NO. / NAME	QTY	MATERIAL
1 BODY	1	HI-PVC
1b RING	1 SET	STPG
2b SEAT	1	SBR, NBR
2c GATE (BODY) (A)	1	U-PVC, HI-PVC
2j INTERNAL THREAD DEFLECTOR	1	C3604
2k DEFLECTOR RETAINER	1	HI-PVC
3 STEM	1	SUS304

PART NO. / NAME	QTY	MATERIAL
4 BONNET (LID) (A)	1	HI-PVC
5 BONNET (LID) (B)	1	HI-PVC
6 THRUST RING	1 SET	PP
7 BOLT/NUT (A)	—	SUS304
8 O-RING (B)	1	SBR, NBR
9 O-RING (C)	1	SBR, NBR
16 O-RING (D)	1	EPDM

PART NO. / NAME	QTY	MATERIAL
18 DUST SEAL	1	EPDM
19 CAP (A)	1	FCD450
20 SET SCREW (B)	1	SUS304
31 STOPPER	1	SUS304
32 PIN (A)	1	SUS304
66 O-RING (H)	1 SET	EPDM

NOTES For 30 mm and 40 mm, the cap (A) is coated with epoxy powder (white).

PRODUCT MODEL CODE LIST

MANUAL

ACTUATION	TYPE	OPERATING SYSTEM	STEM MATERIAL / OPEN DIRECTION	BODY MATERIAL	SEAL MATERIAL	CONNECTION / STANDARD	SIZE
V	S6	C	*	I	S	*	***
V MANUAL VALVE	S6 TYPE 66	C TOP CAP	R SUS, RIGHT L SUS, LEFT	I HI-PVC	S SBR	F1 FLANGED, 10K FD FLANGED, DIN FA FLANGED, ANSI NJ THREADED, JIS ND THREADED, DIN NA THREADED, ANSI	032 32mm ~ 150 150mm

NOTES
- Tapping type is the standard for all the cases.
- The product model code of size 80 mm compatible with the waterworks standard is "075".
- For those compatible with the waterworks standard, size 32 mm, 65 mm and 125 mm are not available.

MANUAL

GATE VALVE SOFT SEAL TYPE (TYPE S) SOFT SEAL VALVE TYPE 66

TYPE——VS6C

CONNECTION / FLANGED——JIS, DIN, ANSI THREADED——Rc, Rp, NPT

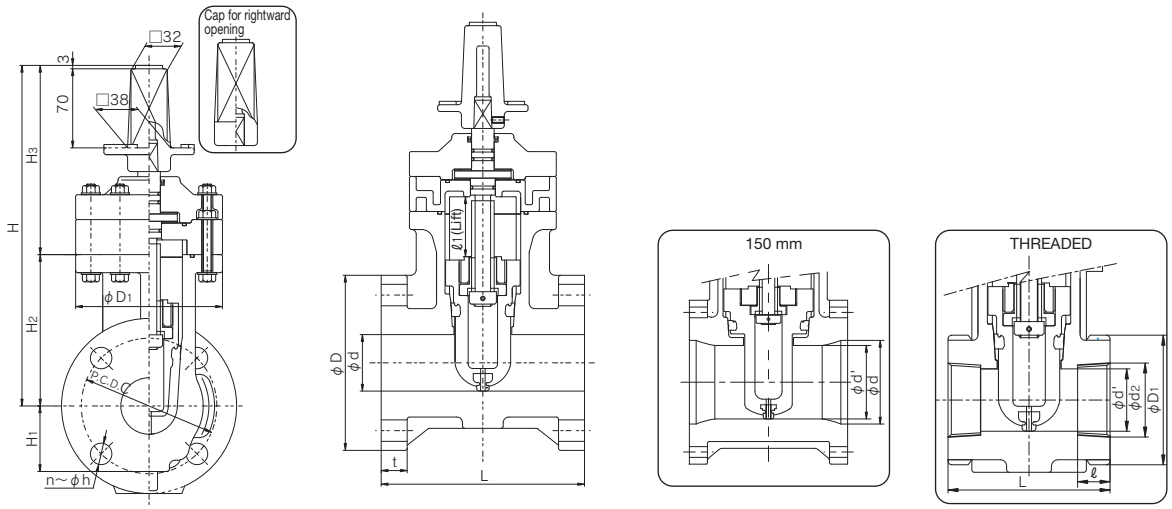

■ JIS, DIN (Unit: mm)

mm	d	d'	D1	LIFT ℓ	H	H1	H2	H3	JIS													
									FLANGED												THREADED			
									JIS 10K						WATERWORKS									
									D	C	n	h	L	t	D	C	n	h	L	t	D1	d2	ℓ	L
32	40	30	120	42	268	50	107	161	135	100	4	19	165	22	–	–	–	–	–	–	90	Rc 1 1/4	22	115
40	40	–	120	42	268	50	107	161	140	105	4	19	165	22	–	–	–	–	–	–	90	Rc 1 1/2	25	115
50	50	–	130	53	300	58	134	166	155	120	4	19	180	23	–	–	–	–	–	–	102	Rc 2	28	130
75(80)	75	–	170	77	361	77	170	191	185	150	8	19	200	25	–	–	–	–	–	–	–	–	–	–
100	100	–	195	102	414	89	207	207	210	175	8	19	230	27	–	–	–	–	–	–	–	–	–	–
150	150	130	270	132	496.5	102	263	233.5	280	240	8	23	270	28	–	–	–	–	–	–	–	–	–	–

mm	DIN											
	FLANGED								THREADED			
	DIN PN10								D1	d2	ℓ	L
	D	C	n	h	n1	M	L	t				
32	–	–	–	–	–	–	–	–	–	–	–	–
40	150	110	4	18	–	–	165	22	90	Rp 1 1/2	25	115
50	165	125	4	18	–	–	180	23	90	Rp 2	28	130
75(80)	200	160	8	18	–	–	240	25	–	–	–	–
100	220	180	8	18	–	–	250	27	–	–	–	–
150	285	240	8	22	–	–	280	27	–	–	–	–

■ ANSI (Unit: inch)

inch	mm	d	d'	D1	LIFT ℓ	H	H1	H2	H3	ANSI										
										FLANGED								THREADED		
										ANSI Class150										
										D	C	n	h	n1	M	L	t	d2	ℓ	L
1 1/2	40	1.57	1.18	4.72	1.65	10.55	1.97	4.21	6.34	5.00	3.88	4	0.62	–	–	6.50	0.87	1 1/2–11 1/2NPT	0.98	4.53
2	50	1.57	–	4.72	1.65	10.55	1.97	4.21	6.34	6.00	4.75	4	0.75	–	–	7.00	0.91	2–11 1/2NPT	1.10	5.12
3	75(80)	1.97	–	5.12	2.09	11.81	2.28	5.28	6.54	7.00	6.00	4	0.75	–	–	8.00	0.98	–	–	–
4	100	2.95	–	6.69	3.03	14.21	3.03	6.69	7.52	9.00	7.50	8	0.75	–	–	9.00	1.06	–	–	–
6	150	3.94	–	7.68	4.02	16.30	3.50	8.15	8.15	11.00	9.50	8	0.88	–	–	10.50	1.06	–	–	–

GATE VALVE SOFT SEAL TYPE (TYPE S) INSIDE SCREW CAP TYPE

- COMPATIBLE WITH THE JAPAN WATER WORKS ASSOCIATION STANDARD (JWWA B125 SYNTHETIC RESIN SOFT SEAL SLUICE VALVE), THE VALVE CAN BE SAFELY USED FOR WATER DISTRIBUTION/SUPPLY. (SIZE: 125 mm)
- THE CHANNEL SURFACE FREE FROM IRREGULARITIES ALLOWS FOR SMOOTH FLOW. THE RUBBER SOFT SEAL ENSURES EXCELLENT WATER TIGHTNESS.
- COMPACT DESIGN ALLOWS FOR SHALLOW DEPTH MOUNTING.

BASIC SPECIFICATIONS

VALVE TYPE — GATE VALVE SOFT SEAL TYPE (TYPE S) INSIDE SCREW CAP TYPE

SIZE — 65 mm, 125 mm, 200 mm (2 1/2 inch, 5 inch, 8 inch)

BODY MATERIAL — HI-PVC

SEAL MATERIAL / SEAT — SBR / NBR

O-RING — EPDM

CONNECTION / FLANGED — JIS10K, DIN, ANSI

	FLUID TEMPERATURE	MAXIMUM WORKING PRESSURE (NORMAL TEMPERATURE) MPa{kgf/cm²}	CONNECTION METHOD FLANGED
HI-PVC	-10℃ ~ 50℃	1.0 {10.2}	○

NOTES The maximum working pressure is the value including the water hammer pressure. Be careful that the maximum working pressure is not exceeded during use.
* Concerning the allowable pressure for each temperature and material, see the technical documents at the end of this catalog.

MANUAL



PARTS LIST MANUAL

65 mm, 125 mm (2½ inch, 5 inch)

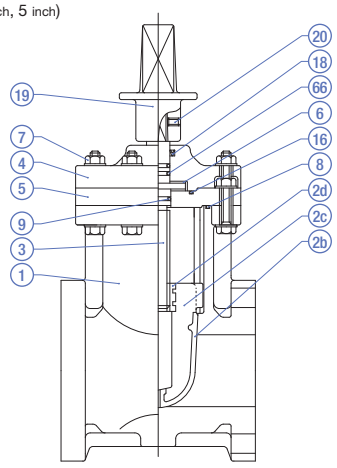

125 mm

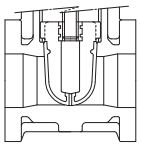

200 mm (8 inch)

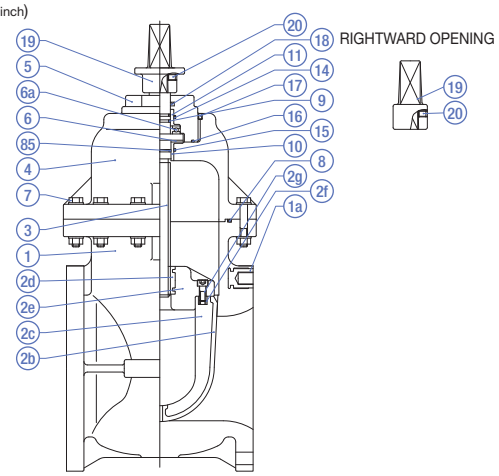

RIGHTWARD OPENING

PART NO. / NAME	QTY	MATERIAL
1 BODY	1	HI-PVC
1a EMBEDDED BODY FITTING (1)	4	C3604
2b SEAT	1	SBR, NBR
2c GATE (BODY) (A)	1	C-PVC
2d GATE (BODY) EMBEDDED FITTING (A)	1	BC6
2e GATE (BODY) (B)(2)	1	PP
2f GATE (BODY) EMBEDDED FITTING (B)	4	C3604
2g BOLT (A) (2)	4	SUS304
3 STEM	1	SUS304

PART NO. / NAME	QTY	MATERIAL
4 BONNET (LID) (A)	1	HI-PVC
5 BONNET (LID) (B)	1	HI-PVC
6 THRUST RING(5)	1 set / 1	PP
6a THRUST BEARING (2)	1	SUJ2
7 BOLT/NUT	—	SUS304
8 O-RING (B)	1	EPDM, SBR4), NBR
9 O-RING (C)(3)	1·2	EPDM, SBR4), NBR
14 O-RING (E)(2)	2	EPDM, SBR4), NBR
15 O-RING (F)(2)	1	EPDM, SBR4), NBR

PART NO. / NAME	QTY	MATERIAL
16 O-RING (D)	1	EPDM, SBR4), NBR
10 BUSH (A)(2)	1	PP
11 BUSH (B)(2)	1	PP
17 SCREW	1	SUS304
18 DUST SEAL	1	EPDM
19 CAP (A)	1	FC200 (EPOXY POWDER COATING)
20 SET SCREW (B)	1	SUS304
66 O-RING (H)	2	EPDM
85 O-RING (F)(2)	1	EPDM, SBR4), NBR

NOTES (1) is used only for 10K 200 mm. (2) is used only for 200 mm. (3) The quantity of use is 1 piece for 65 mm and 125 mm and 2 pieces for 200 mm. (4) Only 200 mm is available.
(5) The quantity of use is 1 set (2 pieces) for 65 mm and 125 mm and 1 piece for 200 mm.
* For 65 mm and 200 mm, the cap (A) is coated with epoxy powder (white).

PRODUCT MODEL CODE LIST

MANUAL

ACTUATION	TYPE	OPERATING SYSTEM	STEM MATERIAL / OPEN DIRECTION	BODY MATERIAL	SEAL MATERIAL	CONNECTION / STANDARD	SIZE
V	SG	C	*	I	S	*	***
V MANUAL VALVE	SG CONVENTIONAL TYPE	C TOP CAP	R SUS, RIGHT L SUS, LEFT	I HI-PVC	S SBR	F1 FLANGED, 10K FW — FD FLANGED, DIN FA FLANGED, ANSI	065 65mm 125 125mm 200 200mm

NOTES
- Tapping type is the standard for all the cases.
- The price above is the set price for the valve, full-face gaskets (2 pcs), and SUS plain washer.
- For those compatible with the waterworks standard, size 65 mm is not available.

MANUAL

GATE VALVE SOFT SEAL TYPE (TYPE S) INSIDE SCREW CAP TYPE

TYPE——VSGC
CONNECTION / FLANGED——JIS, DIN, ANSI

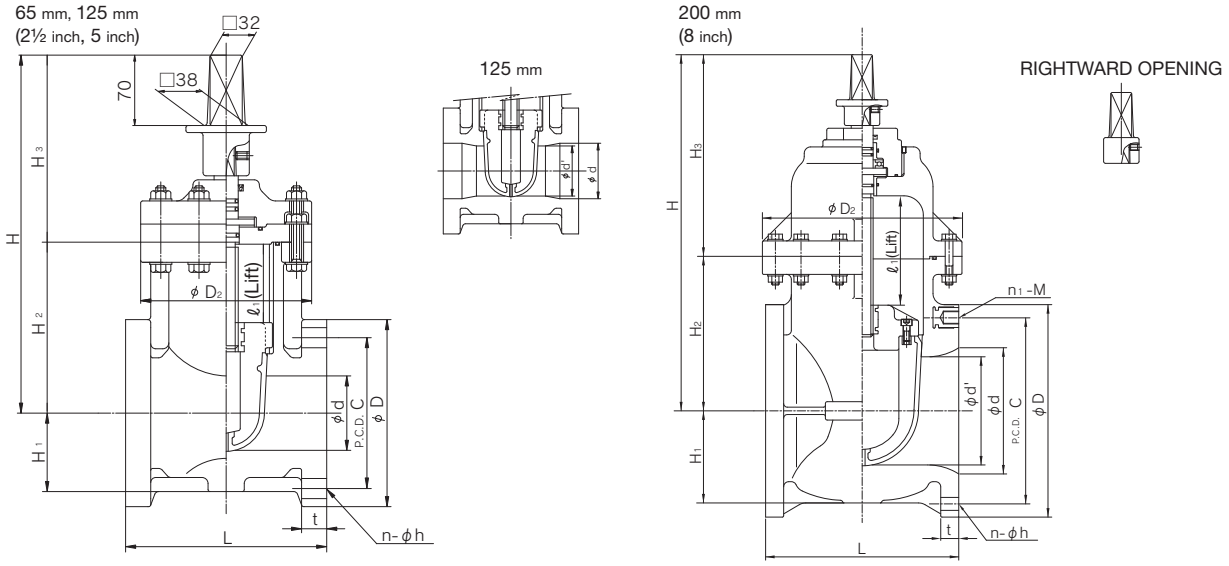

■ JIS, DIN (Unit: mm)

mm	d	d'	D2	ℓ1	H1	H2	H3	H	JIS FLANGED JIS 10K D	C	n	h	n1	M	L	t	JIS FLANGED WATERWORKS D	C	n	h	L	t
65	65	–	155	67	68	152	169	321	175	140	4	19	–	–	190	24	–	–	–	–	–	–
125	125	110	235	112	89	227	200	427	250	210	8	23	–	–	260	27	–	–	–	–	–	–
200	196	168	310	175	143	240	315	555	330	290	10	23	2	M20	290	28	–	–	–	–	–	–

mm	DIN FLANGED DIN PN10 D	C	n	h	n1	M	L	t	THREADED D1	d2	ℓ	L
65	185	145	4	18	–	–	210	24	–	–	–	–
125	250	210	8	18	–	–	260	27	–	–	–	–
200	340	295	6	22	2	M20	300	28	–	–	–	–

■ ANSI (Unit: inch)

inch	mm	d	d'	D2	ℓ1	H1	H2	H3	H	ANSI FLANGED ANSI Class150 D	C	n	h	n1	M	L	t	THREADED d2	ℓ	L
2 1/2	65	2.56	–	6.10	2.64	2.68	5.98	6.65	12.64	7.00	5.50	4	0.75	–	–	7.50	0.94	–	–	–
5	125	4.92	4.33	9.25	4.41	3.50	8.94	7.87	16.81	10.00	8.50	8	0.88	–	–	10.24	1.06	–	–	–
8	200	7.72	6.61	12.20	6.89	5.63	9.45	12.40	21.85	13.50	11.75	6	0.88	2	W 3/4	11.50	1.30	–	–	–

GATE VALVE SOFT SEAL TYPE (TYPE S) INSIDE SCREW ROUND HANDLE TYPE

- EQUIPPED WITH OPENING INDICATOR UNDER THE HANDLE TO ALLOW FOR EASY CHECK OF OPENING DEGREE OF THE VALVE.
- FOR ALL THE WETTED PARTS, CORROSION-RESISTANT MATERIAL IS USED.
- THE CHANNEL SURFACE FREE FROM IRREGULARITIES ALLOWS FOR SMOOTH FLOW. THE RUBBER SOFT SEAL ENSURES EXCELLENT WATER TIGHTNESS.
- MADE OF ROBUST, LIGHTWEIGHT AND IMPACT-RESISTANT HARD VINYL CHLORIDE (HI-PVC), WITH A WEIGHT OF 1/3 TO 1/5 COMPARED TO METAL VALVES.

NOTES For the round handle type, directly hold the round handle when opening or closing the valve. If a turning bar or similar tool is used to open or close the valve, the handle will be broken.

BASIC SPECIFICATIONS

VALVE TYPE——**GATE VALVE SOFT SEAL TYPE (TYPE S) INSIDE SCREW ROUND HANDLE TYPE**

SIZE——**50 mm–200 mm (2 inch–8 inch)**

BODY MATERIAL——HI-PVC

SEAL MATERIAL / SEAT——SBR NBR

O-RING——EPDM

CONNECTION / FLANGED——**JIS10K, DIN, ANSI**

	FLUID TEMPERATURE	MAXIMUM WORKING PRESSURE (NORMAL TEMPERATURE) MPa{kgf/cm²}	CONNECTION METHOD FLANGED
HI-PVC	-10℃ ~ 50℃	1.0 {10.2}	○

NOTES The maximum working pressure is the value including the water hammer pressure. Be careful that the maximum working pressure is not exceeded during use.
* Concerning the allowable pressure for each temperature and material, see the technical documents at the end of this catalog.

MANUAL



PARTS LIST MANUAL

50 mm – 150 mm (2 inch – 6 inch) <Stem: U-PVC>

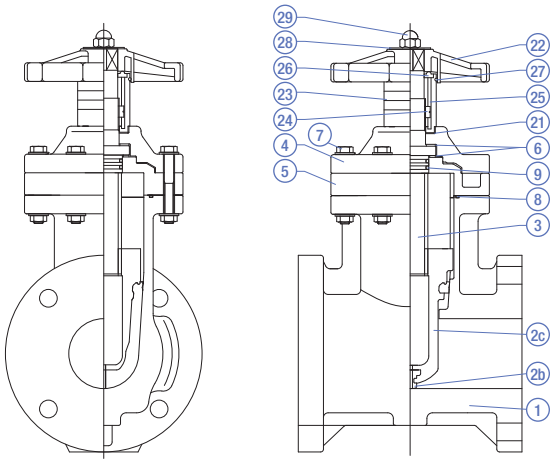

Conventional type:
65 mm, 125 mm

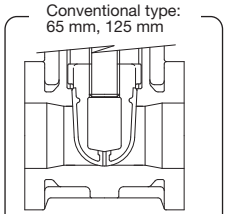

* 65 mm has a full-bore structure.
* ϕd' is 125 mm only.

150 mm

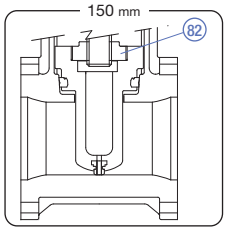

200 mm (8 inch) <Stem: U-PVC>

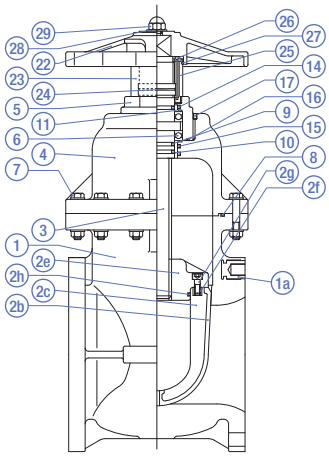

PART NO. / NAME	QTY	MATERIAL
1 BODY	1	HI-PVC
1a EMBEDDED BODY FITTING (1)	4	C3604
2b SEAT	1	SBR, NBR
2c GATE (BODY) (A)	1	HI-PVC, C-PVC
2e GATE (BODY) (B)(2)	1	PP
2f GATE (BODY) EMBEDDED FITTING (B) (2)	4	C3604
2g BOLT (A) (2)	4	SUS304
3 STEM	1	U-PVC
4 BONNET (LID) (A)	1	HI-PVC
5 BONNET (LID) (B)	1	HI-PVC
6 THRUST RING(4)	2	PP

PART NO. / NAME	QTY	MATERIAL
6a THRUST RING(2)	1 SET	SUJ2
7 BOLT/NUT	—	SUS304
2h O-RING (A)(2)	1	EPDM, NBR
8 O-RING (B)	1	EPDM, NBR
9 O-RING (C)(3)	2·3	EPDM, NBR
	1	EPDM, NBR
15 O-RING (F)(2)	1	EPDM, NBR
16 O-RING (D)(2)	1	EPDM, NBR
10 BUSH (A)(2)	1	PP
11 BUSH (B)(2)	1	PP
17 SET SCREW (A)(2)	1	SUS304

PART NO. / NAME	QTY	MATERIAL
21 PACKING	1	EPDM
22 HANDLE	1	PP
23 OPENING COVER	1	PC
24 OPENING RING	1	U-PVC
25 GUIDE PIN	1	SUS304
26 GUIDE PIN SUPPORT PLATE	1	U-PVC
27 O-RING (G)	1	EPDM
28 WASHER	1	U-PVC
29 UNION NUT	1	SUS304
82 SCREW HOLDER	1	U-PVC *For 150 mm.

NOTES (1) is used only for 10K 200 mm. (2) is used only for 200 mm. (3) The quantity of use is 3 pieces for 150 mm or less and 2 pieces for 200 mm. (4) is used for sizes of 150 mm or less.
* The parts list above is applicable when the stem is made of U-PVC.

PRODUCT MODEL CODE LIST

MANUAL

ACTUATION	TYPE	OPERATING SYSTEM	STEM MATERIAL / OPEN DIRECTION	BODY MATERIAL	SEAL MATERIAL	CONNECTION / STANDARD	SIZE
V	**	M	*	I	S	**	***
V MANUAL VALVE	SG CONVENTIONAL TYPE TG T-SHAPED RUBBER	M ROUND HANDLE	J U-PVC, LEFT R SUS, RIGHT	I HI-PVC	S SBR	F1 FLANGED, 10K FD FLANGED, DIN FA FLANGED, ANSI	050 50mm ~ 200 200mm

NOTES
- The type of size 65 mm, 125 mm and 200 mm is "conventional". The type of other sizes is "T-shaped rubber".
- For the JIS10K SUS stem model, right open type is also available.
- The price above is the set price for the valve, full-face gaskets (2 pcs), and SUS plain washer.
- The product model code of size 80 mm compatible with the waterworks standard is "075".
- For the round handle type, resin stems compatible with JIS5K are also available. (40 mm to 150 mm)
- For those compatible with the waterworks standard, size 32 mm and 65 mm are not available.

MANUAL

GATE VALVE SOFT SEAL TYPE (TYPE S) INSIDE SCREW ROUND HANDLE TYPE

TYPE——VSGM, VTGM

CONNECTION / FLANGED——JIS, DIN, ANSI

50 mm – 150 mm (2 inch – 6 inch) <Stem: U-PVC>

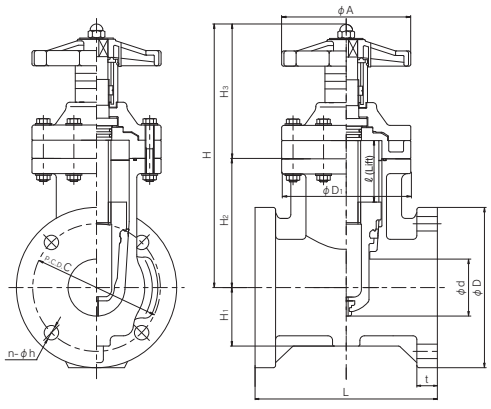

Conventional type:
65 mm, 125 mm

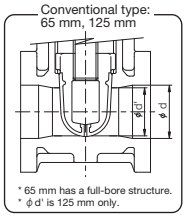

* 65 mm has a full-bore structure.
* ϕd' is 125 mm only.

150 mm

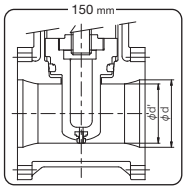

200 mm (8 inch) <Stem: U-PVC>

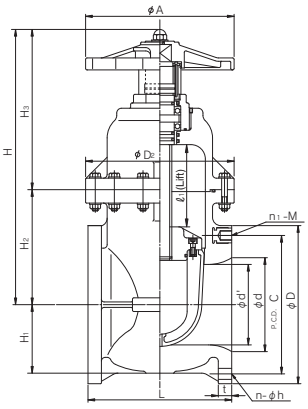

■ JIS, DIN (Unit: mm)

mm	d	d'	D₁	ℓ	H₁	H₂	STEM U-PVC H₃	STEM U-PVC H	STEM SUS H₃	STEM SUS H	A	JIS FLANGED JIS 10K D	C	n	h	n₁	M	L	t	JIS FLANGED WATERWORKS D	C	n	h	L	t
50	50	–	130	52	58	134	159	293	163	297	130	155	120	4	19	–	–	180	23	–	–	–	–	–	–
65	65	–	155	67	68	152	150	302	154	306	155	175	140	4	19	–	–	190	24	–	–	–	–	–	–
75(80)	75	–	170	77	77	170	180	350	191	361	170	185	150	8	19	–	–	200	25	–	–	–	–	–	–
100	100	–	195	102	89	207	203	410	214	421	195	210	175	8	19	–	–	230	27	–	–	–	–	–	–
125	125	110	235	112	89	227	180	407	190	417	230	250	210	8	23	–	–	260	27	–	–	–	–	–	–
150	148	130	270	132	117	263	224	487	234	497	270	280	240	8	23	–	–	270	28	–	–	–	–	–	–
200	196	168	310	175	143	240	337	577	337	577	310	330	290	10	23	2	M20	290	28	–	–	–	–	–	–

mm	DIN FLANGED DIN PN10 D	C	n	h	n₁	M	L	t
50	165	125	4	18	–	–	180	23
65	185	145	4	18	–	–	210	24
75(80)	200	160	8	18	–	–	240	25
100	220	180	8	18	–	–	250	27
125	250	210	8	18	–	–	260	27
150	285	240	8	22	–	–	280	27
200	340	295	6	22	2	M20	300	28

■ ANSI (Unit: inch)

inch	mm	d	d'	D₁	ℓ	H₁	H₂	STEM U-PVC H₃	STEM U-PVC H	STEM SUS H₃	STEM SUS H	A	ANSI FLANGED ANSI Class150 D	C	n	h	n₁	M	L	t
2	50	1.97	–	5.12	2.05	2.28	5.28	6.26	11.54	6.42	11.69	5.12	6.00	4.75	4	0.75	–	–	7.00	0.91
2 1/2	65	2.56	–	6.10	2.64	2.68	5.98	5.91	11.89	6.06	12.05	6.10	7.00	5.50	4	0.75	–	–	7.50	0.94
3	75(80)	2.95	–	6.69	3.03	3.03	6.69	7.09	13.78	7.52	14.21	6.69	7.00	6.00	4	0.75	–	–	8.00	0.98
4	100	3.94	–	7.68	4.02	3.50	8.15	7.99	16.14	8.43	16.57	7.68	9.00	7.50	8	0.75	–	–	9.00	1.06
5	125	4.92	4.33	9.25	4.41	3.50	8.94	7.09	16.02	7.48	16.42	9.06	10.00	8.50	8	0.88	–	–	10.24	1.06
6	150	5.83	5.12	10.63	5.20	4.61	10.35	8.82	19.17	9.21	19.57	10.63	11.00	9.50	8	0.88	–	–	10.50	1.06
8	200	7.72	6.61	12.20	6.89	5.63	9.45	13.27	22.72	13.27	22.72	12.20	13.50	11.75	6	0.88	2	W 3/4	11.50	1.30

GATE VALVE SOFT SEAL TYPE (TYPE S) OUTSIDE SCREW ROUND HANDLE TYPE

- MADE OF ROBUST, LIGHTWEIGHT AND IMPACT-RESISTANT HARD VINYL CHLORIDE (HI-PVC).
- THE CHANNEL SURFACE FREE FROM IRREGULARITIES ALLOWS FOR SMOOTH FLOW. THE RUBBER SOFT SEAL ENSURES EXCELLENT WATER TIGHTNESS.
- THE STEM SCREW IS NOT EXPOSED TO THE FLUID, NO FOREIGN OBJECT DOES NOT ENTER.

NOTES For the round handle type, directly hold the round handle when opening or closing the valve. If a turning bar or similar tool is used to open or close the valve, the handle will be broken.

BASIC SPECIFICATIONS

VALVE TYPE — GATE VALVE SOFT SEAL TYPE (TYPE S) OUTSIDE SCREW ROUND HANDLE TYPE

SIZE — 32 mm–250 mm (1 1/4 inch–10 inch)

BODY MATERIAL — HI-PVC

SEAL MATERIAL / SEAT — SBR, NBR

O-RING — EPDM

CONNECTION / FLANGED — JIS10K, DIN, ANSI

	FLUID TEMPERATURE	MAXIMUM WORKING PRESSURE (NORMAL TEMPERATURE) MPa{kgf/cm²}		CONNECTION METHOD
		32mm–200mm	250mm	FLANGED
HI-PVC	-10℃ ~ 50℃	1.0 {10.2}	0.75 {7.7}	○

NOTES The maximum working pressure is the value including the water hammer pressure. Be careful that the maximum working pressure is not exceeded during use.
* Concerning the allowable pressure for each temperature and material, see the technical documents at the end of this catalog.

MANUAL



PARTS LIST MANUAL

32 mm – 150 mm (1¼ inch – 6 inch)

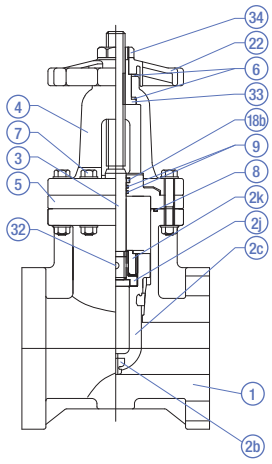

150 mm

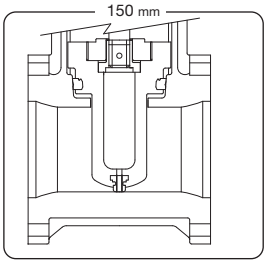

Conventional type: 65 mm, 125 mm

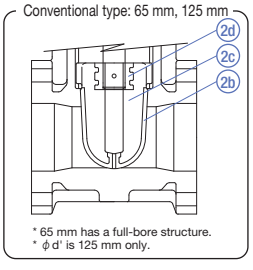

* 65 mm has a full-bore structure.
* ϕ d' is 125 mm only.

200 mm – 250 mm (8 inch – 10 inch)

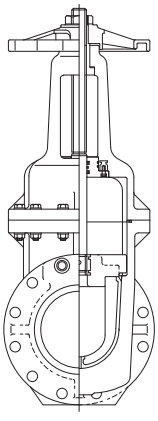

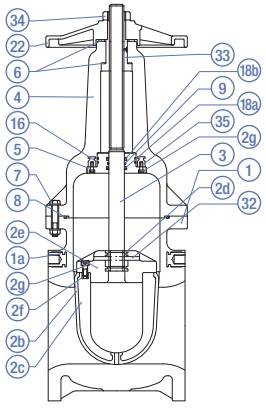

PART NO. / NAME	QTY	MATERIAL
1 BODY	1	HI-PVC
1a EMBEDDED BODY FITTING (1)	4	C3604
2b SEAT	1	SBR, NBR
2c GATE (BODY) (A)	1	HI-PVC, C-PVC
2d GATE (BODY) EMBEDDED FITTING (A)	1	BC6
2e GATE (BODY) (B)(1)	1	HI-PVC
2f GATE (BODY) EMBEDDED FITTING (B) (1)	4	C3604
2g BOLT (A) (1)	4	SUS304
2j INTERNAL THREAD DEFLECTOR(2)	4	BC6

PART NO. / NAME	QTY	MATERIAL
2k DEFLECTOR RETAINER(2)	1	HI-PVC
3 STEM	1	SUS304
4 BONNET (LID) (A)	1	HI-PVC
5 BONNET (LID) (B)	1	HI-PVC, PP
6 THRUST RING (A)	2	PP
7 BOLT/NUT	—	SUS304
8 O-RING (B)	1	EPDM, NBR
9 O-RING (C)	2·1	EPDM, NBR
16 O-RING (D)(1)	2	EPDM, NBR

PART NO. / NAME	QTY	MATERIAL
18a DUST SEAL (A)	1	EPDM, NBR
18b DUST SEAL (B)	1	NBR
22 HANDLE	1	PP
32 PIN (A)	1	SUS304
33 SLEEVE	1	C3604, BC6
34 NUT	1	C3604, BC6
35 EMBEDDED LID FITTING(1)	4	C3604

NOTES (1) is used only for 200 mm and 250 mm. (2) is used for sizes other than 65 mm, 125 mm, 200 mm and 250 mm.

PRODUCT MODEL CODE LIST

MANUAL

ACTUATION	TYPE	OPERATING SYSTEM	STEM MATERIAL / OPEN DIRECTION	BODY MATERIAL	SEAL MATERIAL	CONNECTION / STANDARD	SIZE
V	**	M	L	I	S	F1	***
V MANUAL VALVE	SR CONVENTIONAL TYPE TR T-SHAPED RUBBER	M ROUND HANDLE	L SUS, LEFT	I HI-PVC	S SBR	F1 FLANGED, 10K FD FLANGED, DIN FA FLANGED, ANSI	032 32mm ~ 250 250mm

NOTES
- The type of size 65 mm, 125 mm, 200 mm and 250 mm is "conventional". The type of other sizes is "T-shaped rubber".
- The price above is the set price for the valve, full-face gaskets (2 pcs), and SUS plain washer.
- For the seal material NBR, contact us.

MANUAL

GATE VALVE SOFT SEAL TYPE (TYPE S) OUTSIDE SCREW ROUND HANDLE TYPE

TYPE——VSRM, VTRM

CONNECTION / FLANGED——JIS, DIN, ANSI

32 mm – 150 mm (1¼ inch – 6 inch)

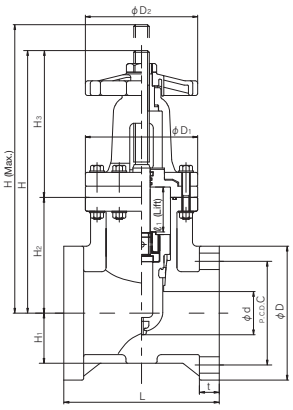

150 mm

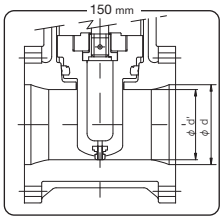

Conventional type: 65 mm, 125 mm

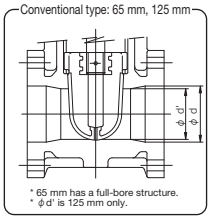

* 65 mm has a full-bore structure.
* φd' is 125 mm only.

200 mm – 250 mm (8 inch – 10 inch)

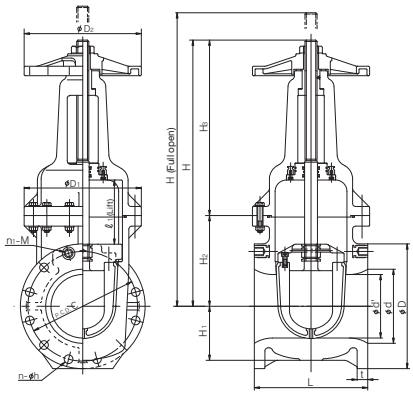

■ JIS, DIN (Unit: mm)

mm	d	d'	D₁	D₂	ℓ₁	H	(Max.) H	H₁	H₂	H₃	JIS FLANGED JIS 10K D	C	n	h	n₁	M	L	t
32	40	30	120	120	37	269	311	50	107	162	135	100	4	19	–	–	165	22
40	40	–	120	120	42	264	306	50	107	157	140	105	4	19	–	–	165	22
50	50	–	130	130	52	304	356	58	134	170	155	120	4	19	–	–	180	23
65	65	–	155	155	67	340	407	68	152	188	175	140	4	19	–	–	190	24
75(80)	75	–	170	170	77	398	476	77	170	228	185	150	8	19	–	–	200	25
100	100	–	195	195	102	502	604	89	207	295	210	175	8	19	–	–	230	27
125	125	110	235	235	112	481	593	89	227	254	250	210	8	23	–	–	260	27
150	150	130	270	270	132	600	732	102	263	337	280	240	8	23	–	–	270	28
200	196	168	310	310	175	702	877	143	240	462	330	290	10	23	2	M20	290	28
250	247	210	360	360	219	856	1075	175	270	586	400	355	12	25	–	–	380	30

mm	DIN FLANGED DIN PN10 D	C	n	h	n₁	M	L	t
32	–	–	–	–	–	–	–	–
40	150	110	4	18	–	–	165	22
50	165	125	4	18	–	–	180	23
65	185	145	4	18	–	–	210	24
75(80)	200	160	8	18	–	–	240	25
100	220	180	8	18	–	–	250	27
125	250	210	8	18	–	–	260	27
150	285	240	8	22	–	–	280	27
200	340	295	6	22	2	M20	300	28
250	395	350	12	22	–	–	380	30

■ ANSI (Unit: inch)

inch	mm	d	d'	D₁	D₂	ℓ₁	H	(Max.) H	H₁	H₂	H₃	ANSI FLANGED ANSI CLASS150 D	C	n	h	n₁	M	L	t
1 1/2	40	1.57	–	4.72	4.72	1.65	10.39	12.05	1.97	4.21	6.18	5.00	3.88	4	0.62	–	–	6.50	0.87
2	50	1.97	–	5.12	5.12	2.05	11.97	14.02	2.28	5.28	6.69	6.00	4.75	4	0.75	–	–	7.00	0.91
2 1/2	65	2.56	–	6.10	6.10	2.64	13.39	16.02	2.68	5.98	7.40	7.00	5.50	4	0.75	–	–	7.50	0.94
3	75(80)	2.95	–	6.69	6.69	3.03	15.67	18.74	3.03	6.69	8.98	7.00	6.00	4	0.75	–	–	8.00	0.98
4	100	3.94	–	7.68	7.68	4.02	19.76	23.78	3.50	8.15	11.61	9.00	7.50	8	0.75	–	–	9.00	1.06
5	125	4.92	4.33	9.25	9.25	4.41	18.94	23.35	3.50	8.94	10.00	10.00	8.50	8	0.88	–	–	10.24	1.06
6	150	5.91	5.12	10.63	10.63	5.20	23.62	28.82	4.02	10.35	13.27	11.00	9.50	8	0.88	–	–	10.50	1.06
8	200	7.72	6.61	12.20	12.20	6.89	27.64	34.53	5.63	9.45	18.19	13.50	11.75	6	0.88	2	W 3/4	11.50	1.30
10	250	9.72	8.27	14.17	14.17	8.62	33.70	42.32	6.89	10.63	23.07	16.00	14.25	12	1.00	–	–	14.96	1.18

GATE VALVE OUTSIDE SCREW SECTION VALVE (FOR VACUUM SEWAGE)

- THE CHANNEL SURFACE FREE FROM IRREGULARITIES ALLOWS FOR SMOOTH FLOW. THE RUBBER SOFT SEAL ENSURES EXCELLENT WATER TIGHTNESS.
- THE STEM SCREW IS NOT EXPOSED TO THE FLUID, NO FOREIGN OBJECT DOES NOT ENTER.
- COMPACT DESIGN ALLOWS FOR SHALLOW DEPTH MOUNTING.

MANUAL

Size 100 mm, 150 mm ——— Applicable to a burial depth of 600 mm.
Size 200 mm ——— Applicable to a burial depth of 700 mm.
Size 250 mm ——— Applicable to a burial depth of 800 mm.

BASIC SPECIFICATIONS

VALVE TYPE ——— GATE VALVE OUTSIDE SCREW SECTION VALVE (FOR VACUUM SEWAGE)
SIZE ——— 100 mm, 150 mm, 200 mm, 250 mm (4 inch, 6 inch, 8 inch, 10 inch)
BODY MATERIAL ——— HI-PVC
SEAL MATERIAL / SEAT ——— SBR
O-RING ——— EPDM
CONNECTION / FLANGED — JIS10K

	FLUID TEMPERATURE	MAXIMUM WORKING PRESSURE (NORMAL TEMPERATURE) MPa{kgf/cm²}		CONNECTION METHOD
		100mm—200mm	250mm	FLANGED
HI-PVC	-10℃ ~ 50℃	1.0 {10.2}	0.75 {7.7}	○

NOTES The maximum working pressure is the value including the water hammer pressure. Be careful that the maximum working pressure is not exceeded during use.
* Concerning the allowable pressure for each temperature and material, see the technical documents at the end of this catalog.



PRODUCT MODEL CODE LIST MANUAL

ACTUATION	TYPE	OPERATING SYSTEM	STEM MATERIAL, OPERATING DIRECTION	BODY MATERIAL	SEAL MATERIAL	CONNECTION	SIZE
V	**	C	L	I	S	F1	***
V MANUAL VALVE	TR T-STYLE(RUBBER) SR REGULAR	C TOP-CAP	L STAINLESS STEEL, LEFT	I HI-PVC	S SBR	F1 JIS10K	100 100mm 250 250mm

PARTS LIST MANUAL

100 mm – 150 mm (4 inch – 6 inch)

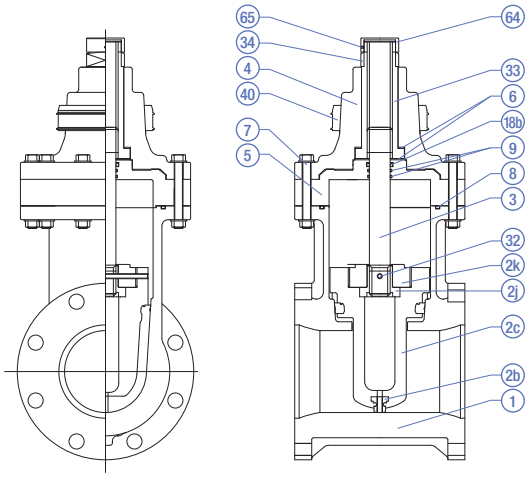

200 mm – 250 mm (8 inch – 10 inch)

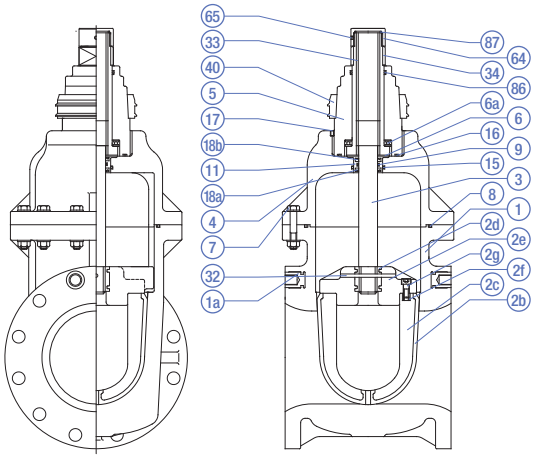

PART NO. / NAME	QTY	MATERIAL
1 BODY	1	HI-PVC
1a EMBEDDED BODY FITTING (5)	4	C3604
2b SEAT	1	SBR
2c GATE (BODY) (A)	1	HI-PVC, C-PVC
2d GATE (BODY) EMBEDDED FITTING (A) (1)	1	SUS303
2e GATE (BODY) (B)(1)	1	HI-PVC
2f GATE (BODY) EMBEDDED FITTING (B) (1)	4	SUS304
2g BOLT (A) (1)	4	SUS304
2j INTERNAL THREAD DEFLECTOR(2)	1	SUS304
2k DEFLECTOR RETAINER(2)	1	HI-PVC
3 STEM	1	SUS304

PART NO. / NAME	QTY	MATERIAL
4 BONNET (LID) (A)	1	HI-PVC
5 BONNET (LID) (B)	1	HI-PVC, U-PVC
6 THRUST RING(4)	2	PP
6a THRUST BEARING (5)	1	SUJ2
7 BOLT, NUT, WASHER	—	SUS304
8 O-RING (B)	1	EPDM
9 O-RING (C)	2・1	EPDM
11 BUSH (B)(1)	1	PP
16 O-RING (D)(1)	2	EPDM
17 SET SCREW (A)(1)	1	SUSU304
18a DUST SEAL (A) (1)	1	EPDM

PART NO. / NAME	QTY	MATERIAL
18b DUST SEAL (B)	1	NBR
32 PIN (A)	1	SUS304
33 SLEEVE	1	C3604
34 NUT(3)	1	SUS403
40 ADAPTER	1	NBR
64 CAP (D)	1	SUS304
65 SET SCREW (C)	1	SUS304
86 O-RING (N)(1)	1	EPDM
87 O-RING (O)(1)	1	EPDM

NOTES (1) is used for sizes of 200 mm or more. (2) is used for sizes of 150 mm or less. (3) is used for sizes of 200 mm or less. (4) is used in a quantity of 1 piece for 200 and 250 mm. (5) is used only for 200 mm.

GATE VALVE OUTSIDE SCREW SECTION VALVE (FOR VACUUM SEWAGE)

CONNECTION / FLANGED——JIS

100 mm – 150 mm (4 inch – 6 inch)

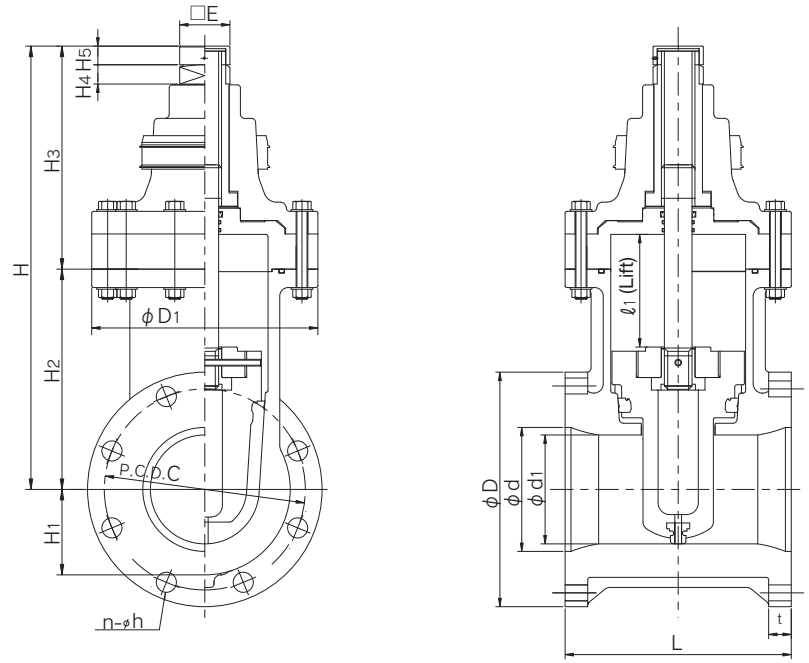

200 mm – 250 mm (8 inch – 10 inch)

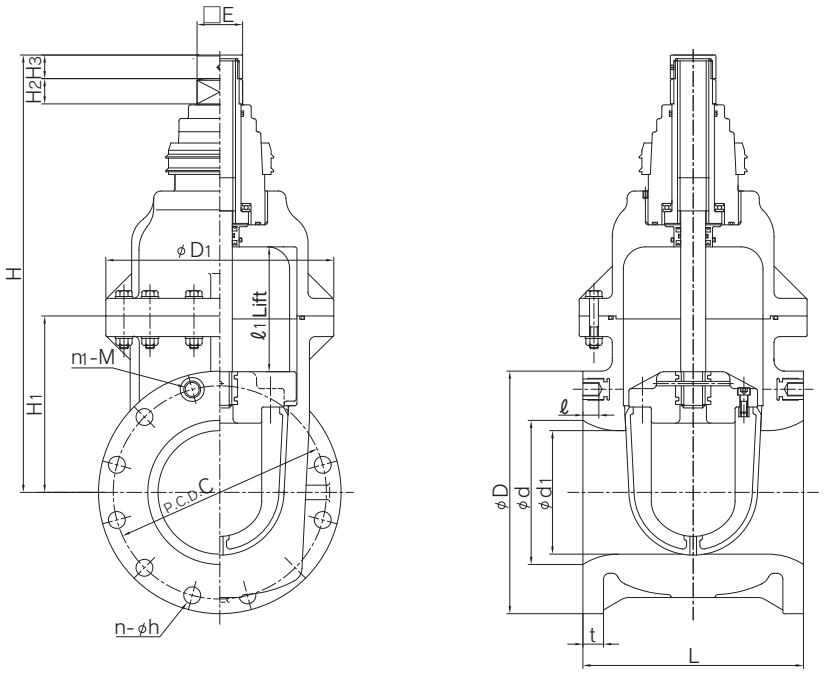

■ JIS (Unit: mm)

mm	d	d'	D1	ℓ1	E	H1	H2	H3	H4	H5	H	JIS10K D	C	n	h	n1	M	ℓ	L	t
100	100	–	195	102	60	89	207	223	23	26	430	210	175	8	19	–	–	–	230	27
150	150	130	270	132	60	102	263	267	23	26	530	280	240	8	23	–	–	–	270	28
200	196	168	310	175	60	240	39	27	–	–	607	330	290	10	23	2	M20	20	290	28
250	247	210	360	219	60	270	44	27	–	–	743	400	355	12	25	–	–	–	380	30

AIR RELEASE VALVE, ISOLATING VALVE

APPLICABLE FOR SHALLOW LAYER BURIAL <MADE OF PDCPD>

- LIGHTWEIGHT AND COMPACT SYNTHETIC RESIN QUICK AIR RELEASE VALVE WITH ADEQUATE MEASURES TO DEAL WITH FOREIGN SUBSTANCE.
- EXCELLENT CUTOFF PERFORMANCE AT LOW PRESSURE (4.9 kPa)
- DISCHARGES AIR AT A HIGH RATE AND REDUCES THE TIME FOR WATER FILLING/RELEASE.
- THE ISOLATING VALVE IS EQUIPPED WITH A PRESSURE GAUGE MOUNTING TAP AS STANDARD (75 - 200 mm).

MANUAL



AIR RELEASE VALVE, ISOLATING VALVE FOR AGRICULTURE

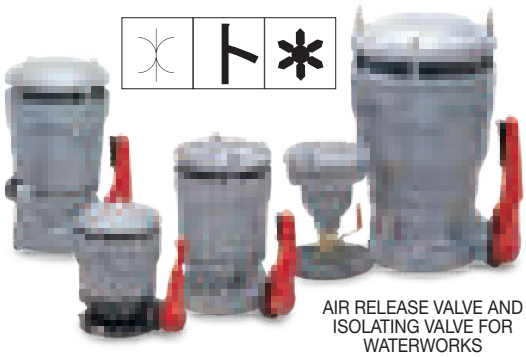

AIR RELEASE VALVE AND ISOLATING VALVE FOR WATERWORKS

BASIC SPECIFICATIONS

VALVE TYPE——AIR RELEASE VALVE, ISOLATING VALVE APPLICABLE FOR SHALLOW LAYER BURIAL <MADE OF PDCPD>

SIZE——25 mm, 75 mm—200 mm (1 inch, 3 inch—8 inch)

BODY MATERIAL——PDCPD

SEAL MATERIAL——EPDM SBR

CONNECTION / FLANGED——JIS7.5K,JIS10K,JIS16K

THREADED—R

NOTES The maximum working pressure is the value including the water hammer pressure. The 25 mm type is equipped with a cock (body material: brass).
The 75 mm to 200 mm isolating valves are butterfly valves.

SPECIFICATIONS AND PRODUCT LINEUP

NOMINAL PRESSURE	WORKING PRESSURE (NORMAL TEMP.) MPa	Max. Working Pressure MPa	CONNECTION	SIZE				
				25	75	100	150	200
7.5k	0.75	1.3	THREADED (TYPE A)	◎	—	—	—	—
			FLANGED (TYPE B)	—	—	—	—	—
10k	1.0	1.4	THREADED (TYPE A)	◎	—	—	—	—
			FLANGED (TYPE B)	◎	◎	◎	◎	◎
16k	1.6	2.2	THREADED (TYPE A)	◎	—	—	—	—
			FLANGED (TYPE B)	◎	◎	◎	—	—

PRODUCT MODEL CODE LIST

ACTUATION	TYPE	OPERATING SYSTEM	BODY MATERIAL	SEAL MATERIAL	CONNECTION	SIZE
V	＊＊	＊＊	＊	＊	＊＊	＊＊＊
V MANUAL VALVE	RW AIR RELEASE VALVE IW ISOLATING VALVE FOR WATERWORKS AR AIR RELEASE VALVE IS ISOLATING VALVE FOR AGRICULTURE	LV LEVER ZZ TYPE B	D PDCPD I HI-PVC	S SBR FOR WATERWORKS E EPDM (REGULAR,AGRICULTURE)	NR THREADED R F1 JIS10K FW JIS7.5K F6 JIS16K	025 25mm 〜 200 200mm

PARTS LIST MANUAL

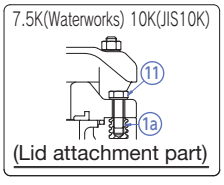

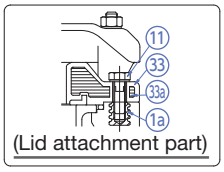

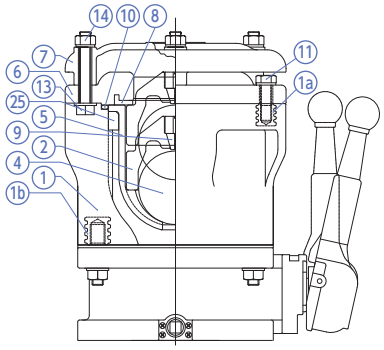

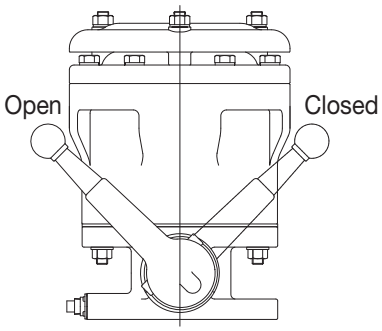

PART NO. / NAME	QTY	MATERIAL
①BODY	1	PDCPD
①aEMBEDDED FITTING (A)	—	C3604
①bEMBEDDED FITTING (B)	—	C3604
②MOVING VALVE BODY	1	PP
④FLOAT VALVE BODY	1	PP
⑤GUIDE	1	25mm〜150mm—HI-PVC, 200mm—PDCPD
⑥LID	1	PDCPD

PART NO. / NAME	QTY	MATERIAL
⑦COVER	1	PDCPD
⑧LARGE AIR HOLE VALVE SEAT	1	EPDM (SBR FOR WATERWORKS)
⑨SMALL AIR HOLE VALVE SEAT	1	EPDM (SBR FOR WATERWORKS)
⑩O-RING	1	EPDM (SBR FOR WATERWORKS)
⑪BOLT, WASHER (A)	—	SUS304
⑬BOLT, WASHER (B)	—	SUS304
⑭NUT (B)	—	SUS304
㉒EYE NUT	2	SUS304
㉝aINSERT	1	S45C

MANUAL

AIR RELEASE VALVE, ISOLATING VALVE

APPLICABLE FOR SHALLOW LAYER BURIAL <MADE OF PDCPD>

CONNECTION / FLANGED——JIS THREADED——R

25 mm (1 inch)
FLANGED (Type B)

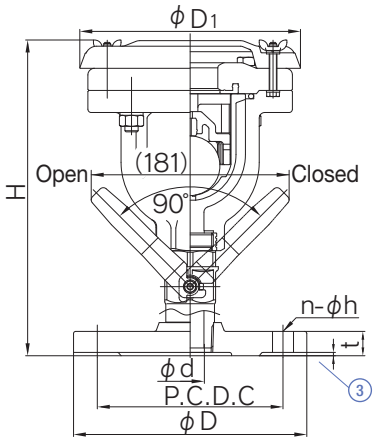

25 mm (1 inch)
THREADED (Type A)

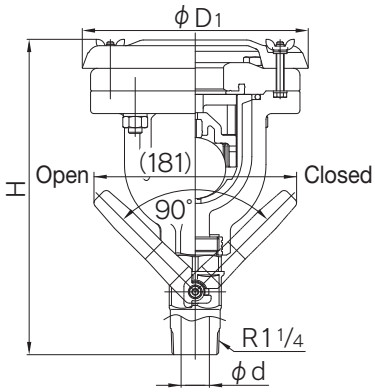

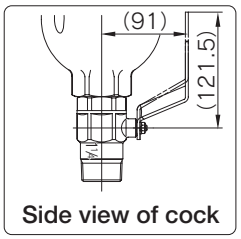

■ 25 mm flanged (Type B) JIS (Unit: mm)

mm	NOMINAL PRESSURE	D1	H	d	7.5k (Waterworks) D	C	n-h	t	10K (JIS10K), 16K (JIS16K) D	C	n-h	t
25	7.5k 10k 16k	200	286	25	-	-	-	-	185	150	8-ϕ19	22

■ 25 mm threaded (Type A) JIS (Unit: mm)

mm	NOMINAL PRESSURE	D1	H	d
25	7.5k 10k 16k	200	279	25

75 mm (3 inch)
FLANGED

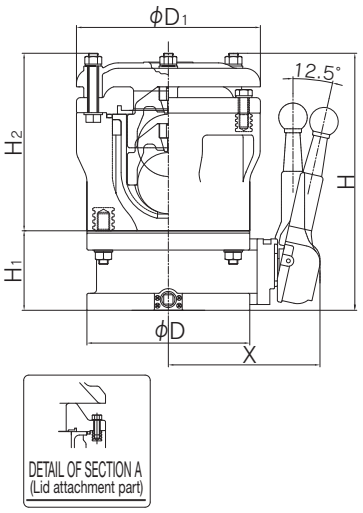

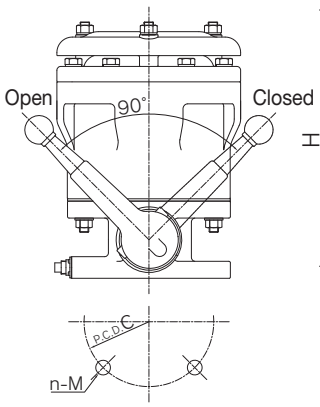

100 mm – 200 mm (4 inch – 8 inch)
FLANGED

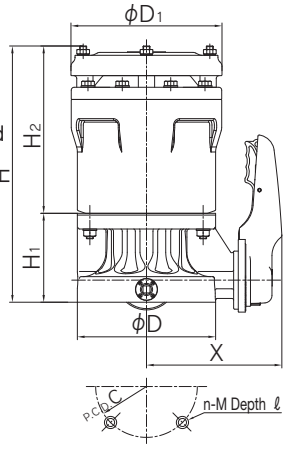

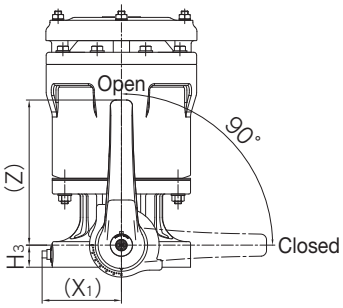

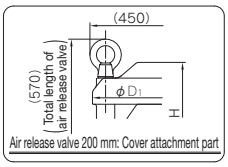

■ 75mm—200mm
JIS (Unit: mm)

mm	NOMINAL PRESSURE	D1	7.5k (Waterworks) C	n-M	ℓ	10K (JIS10K),16K (JIS16K) C	n-M	ℓ	D1	H	H1	H2	H3	X	Z
75	7.5k 10k 16k	211	-	-	-	150	8-ϕ19	-	238	333	103	230	50	197	219
100		238	-	-	-	175	8-M16	22	260	411	123	288	38	233	250
150		290	-	-	-	240	8-M20	30	341	596	203	393	70	282	320
200		342	-	-	-	290	12-M20	30	440	729	203	526	70	322	400

AUTOMATIC WATER FEEDING VALVE

- SIGNIFICANTLY SAVES WATER AND ENERGY BY SUPPLYING ONLY NECESSARY AMOUNT OF WATER ACCORDING TO THE SET WATER LEVEL.
- CAN ALSO BE USED FOR OTHER APPLICATIONS BY MANUAL OPERATION, BY CONNECTING A HOSE TO THE DISCHARGE PORT.
- FACILITATES INTERMITTENT IRRIGATION AND PREVENTS COLD-WEATHER DAMAGE.
- DOES NOT REQUIRE ELECTRICITY OR OTHER ENERGY SINCE IT DIRECTLY USES WATER PRESSURE IN THE PIPE LINE.
- PREVENTS FERTILIZER OR CHEMICAL AGENTS FROM FLOWING OUT DUE TO GRAVITY FED IRRIGATION AND PREVENTS WATER QUALITY DEGRADATION.



BASIC SPECIFICATIONS

VALVE TYPE——————**AUTOMATIC WATER FEEDING VALVE**

SIZE——————**50 mm—80 mm (2 inch—3 inch)**

BODY MATERIAL——————**HI-PVC**

SENSOR MATERIAL——————**ABS**

CONNECTION / FLANGED——**JIS10K**

SOCKET——**JIS**

THREADED—**Rc**

	OPERATING DIFF. PRESSURE MPa{kgf/cm²}	MAXIMUM WORKING PRESSURE (NORMAL TEMPERATURE) MPa{kgf/cm²}	WATER LEVEL ADJUSTMENT
SIZE-50 mm	0.02~0.75 {0.2~7.7}	1.0 {10.2}	-6cm ~ 12cm
SIZE-80 mm	TYPE A: 0.015 – 0.5 {0.15 – 5.1} TYPE B: 0.03 – 0.75 {0.3 – 7.7}	TYPE A: 0.5 {5.1} TYPE B: 1.0 {10.2}	

ATTACHMENT TYPES

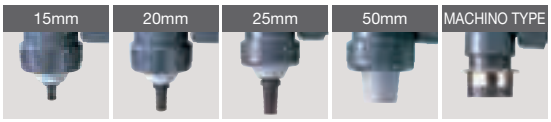

80-mm attachment
15 mm, 20 mm, 25 mm, 50 mm, Machino type

50-mm attachment
15 mm, 20 mm, 25 mm, Machino type

PRODUCT MODEL CODE LIST

ACTUATION	TYPE	BODY MATERIAL	SEAL MATERIAL	CONNECTION	SIZE
AAW	＊＊	I	E	＊＊	＊＊＊
AAW AUTOMATIC WATER FEEDING VALVE	ZZ AUTOMATIC WATER FEEDING VALVE(50mm) AT TYPE A(TYPE-A) BT TYPE B(TYPE-B)	I HI-PVC	E EPDM	F1 JIS10K NJ THREADED SJ SOCKET	050 50mm ~ 080 80mm

PRODUCT MODEL CODE LIST

TYPE	TYPE	MATERIAL	BODY SIZE	ATTACHIMENT SIZE
S	AW	AH	＊＊＊	＊＊＊
S PARTS SET	AW ATTATCHMENT FOR ELBOW WITH SCREW EXTERNAL	AH ATTACHIMENT (U-PVC)	050 50mm ~ 080 80mm	016 15mm ~ 050 50mm

PARTS LIST MANUAL

■ SENSOR (CROSS-SECTIONAL VIEW)

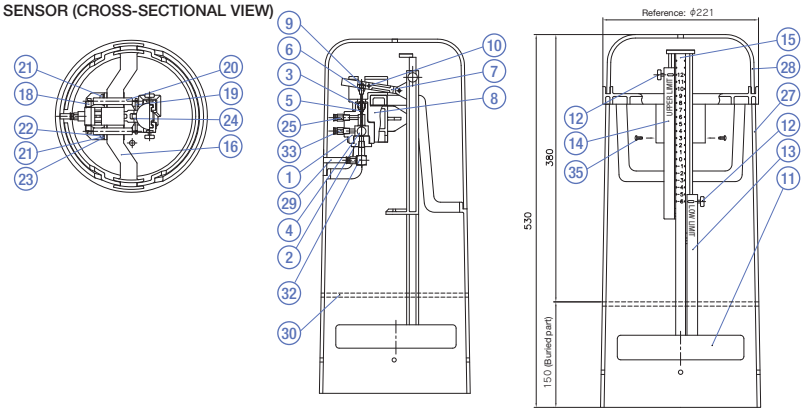

PART NO. / NAME	QTY	MATERIAL	MEMO
(1) AUTOMATIC SWITCHING VALVE BODY	1	HI-PVC	
(2) AUTOMATIC SWITCHING VALVE LOWER CAP	1	HI-PVC	
(3) AUTOMATIC SWITCHING VALVE UPPER CAP	1	HI-PVC	
(4) AUTOMATIC SWITCHING VALVE BODY	1	EPDM+SUS304	
(5) O-RING	1	EPDM	
(6) COUPLING	1	SUS304	P3
(7) SENSOR ARM	1	ABS	
(8) SENSOR BODY	1	ABS	
(9) PARALLEL PIN (A)	1	SUS304	PARALLEL PIN (A TYPE), ϕ2, L6
(10) PARALLEL PIN (B)	1	SUS304	PARALLEL PIN (A TYPE), ϕ3, L28
(11) FLOAT	1	PP FOAM	
(12) WATER LEVEL ADJUSTING TAB	1	SUS304	DECORATIVE SCREW, M6, L10
(13) LOW LIMIT STOPPER	1	ABS	
(14) UPPER LIMIT STOPPER	1	ABS	
(15) DIAL PLATE	1	ABS	
(16) FIXING ARM	1	ABS	

PART NO. / NAME	QTY	MATERIAL	MEMO
(18) SPRING HOOK (A)	1	SUS304	
(19) SPRING HOOK (B)	1	SUS304	
(20) TENSION SPRING	2	SUS304	COIL SPRING BY SHOWA SPRING (SH08-15)
(21) SCREW (B)	2	SUS304	CROSS RECESSED PAN HEAD SCREW, M5, L15
(22) SPRING WASHER	2	SUS304	M5
(23) WASHER (A)	2	SUS304	M5
(24) WASHER (B)	2	SUS304	
(25) QUICK-RELEASE JOINT, HALF UNION (A)	2	C3604	Plated
(27) SENSOR CASE BODY	1	ABS	
(28) SENSOR CASE LID	1	ABS	
(29) TUBE	1	Nylon 11	
(30) TAPE	1	U-PVC	By SUMITOMO 3M
(32) QUICK ELBOW JOINT	1	C3604	Plated
(33) QUICK-RELEASE JOINT, HALF UNION (B)	1	C3604	Not plated
(35) TAPPING SCREW (A)	2	SUS304	CROSS RECESSED PAN HEAD TAPPING SCREW, M5, L15

NOTES (1) is used for the semiautomatic type.

MANUAL

AUTOMATIC WATER FEEDING VALVE

CONNECTION / FLANGED——JIS SOCKET——JIS THREADED——Rc

■ WATER PLUG BODY (CROSS-SECTIONAL VIEW)

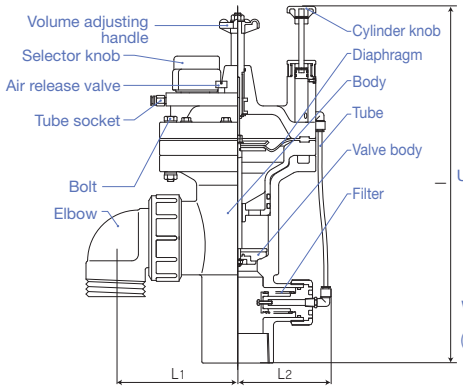

■ SENSOR

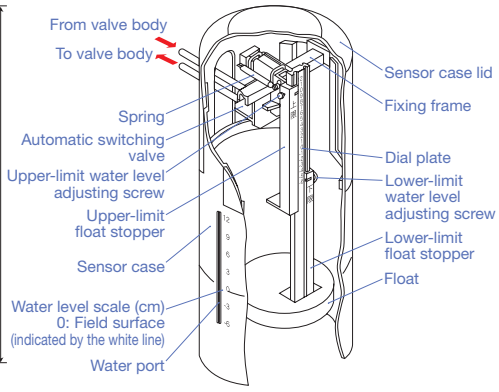

■ WATER PLUG BODY (PLAN VIEW)

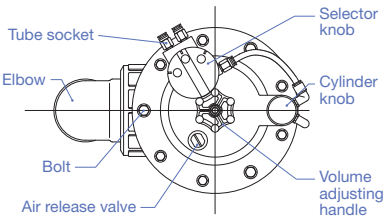

■ JIS (Unit: mm)

VALVE CONNECTION	mm	L1	L1	ℓ
SOCKET, THREADED	50	143	117	470
SOCKET, THREADED	80	187.5	137	548
FLANGED, 10K	50	143	117	541
FLANGED, 10K	80	187.5	134	621
FLANGED	50	143	117	541
FLANGED	80	187.5	134	622

ALFALFA VALVE® TYPE 82

- DESIGNED TO ACHIEVE EXCELLENT STRENGTH IN ADDITION TO ENSURING APPEARANCE AND SEALING PERFORMANCE.
- DESIGNED TO REDUCE SCATTERING OF WATER AND PREVENT HARMFUL EFFECTS ON SURROUNDING PADDY FIELDS.
- THE SMALL NUMBER OF PARTS FACILITATES DISASSEMBLY. THE COVER CAN BE REMOVED WITHOUT STOPPING THE PUMP.



T-SHAPED HANDLE TYPE

MANUAL



HANDLE FIXING TYPE



125m FOR SPLASH PROOF

BASIC SPECIFICATIONS

VALVE TYPE — **ALFALFA VALVE® TYPE 82**
SIZE — **50 mm, 80 mm, 100 mm (2 inch, 3 inch, 4 inch)**
BODY MATERIAL — **U-PVC**
SEAL MATERIAL — **EPDM**
CONNECTION / FLANGED — **JIS10K**
SOCKET — **JIS**

	FLUID TEMPERATURE	MAXIMUM WORKING PRESSURE (NORMAL TEMPERATURE) MPa{kgf/cm²}	CONNECTION METHOD FLANGED	SOCKET
U-PVC	0℃ ~ 50℃	1.0 {10.2}	○	○

NOTES The maximum working pressure is the value including the water hammer pressure. Be careful that the maximum working pressure is not exceeded during use.
* Concerning the allowable pressure for each temperature and material, see the technical documents at the end of this catalog.

PRODUCT MODEL CODE LIST

ACTUATION	TYPE	OPERATING SYSTEM	BODY MATERIAL	SEAL MATERIAL	CONNECTION	SIZE
V	AF	＊＊	U	E	＊＊	＊＊＊
V MANUAL VALVE	AF ALFALFA VALVE	TH T-SHAPED HANDLE TYPE MH HANDLE FIXING TYPE	U U-PVC	E EPDM	SJ SOCKET F1 JIS10K	050 50mm 〜 125 125mm

MANUAL

ALFALFA VALVE® TYPE 82

CONNECTION / FLANGED, SOCKET——JIS

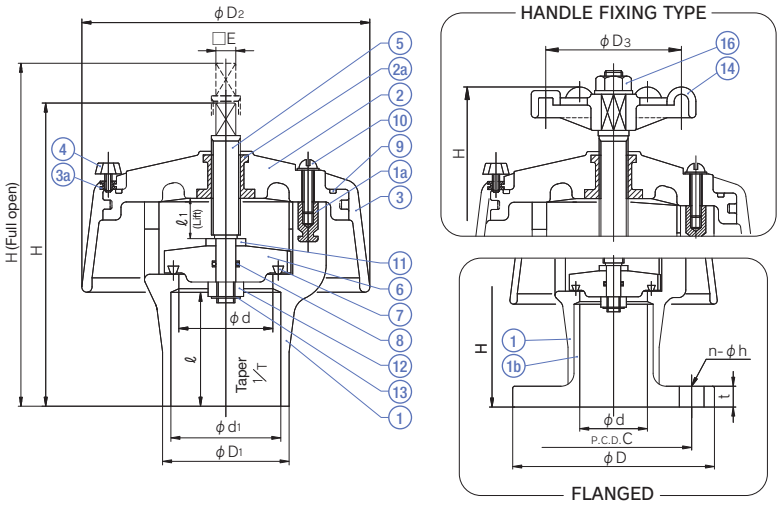

PART NO. / NAME	QTY	MATERIAL	MEMO
① BODY	1	U-PVC	
①a EMBEDDED BODY FITTING	4	C3604	
①b FLANGE	1	U-PVC	Used for flanged type.
② BONNET	1	PP	
②a EMBEDDED BONNET FITTING	1	C3604	
③ COVER	1	PP	
③a EMBEDDED COVER FITTING	1	C3604	
④ BUTTERFLY BOLT	1	SUS304	
⑤ STEM	1	SUS303	
⑥ DISC	1	U-PVC	
⑦ PACKING (A)	1	NIPOL(1)	
⑧ O-RING	1	EPDM	
⑨ PACKING (B)	1	EPDM	
⑩ ROUND HEAD SCREW	4	SUS304	
⑪ WASHER (A)	1	SUS304	
⑫ NUT (A)	1	SUS304	
⑬ E-SHAPED STOP RING	1	SUS304	
⑭ HANDLE	1	PP	Used when the handle is provided.
⑯ HEX NUT (B)	1	U-PVC	Used when the handle is provided.

NOTES (1) NIPOL is a registered trademark of Zeon Corporation.

■ JIS (Unit: mm)

mm	d	FLANGED JIS 10K D	C	n	h	SOCKET t	d1	1/T	ℓ	D1	D2	D3	E	ℓ1	H SOCKET T-SHAPED HANDLE TYPE	H SOCKET HANDLE FIXING TYPE	H FLANGED T-SHAPED HANDLE TYPE	H FLANGED HANDLE FIXING TYPE	H (FULL OPEN) SOCKET T-SHAPED HANDLE TYPE	H (FULL OPEN) SOCKET HANDLE FIXING TYPE	H (FULL OPEN) FLANGED T-SHAPED HANDLE TYPE	H (FULL OPEN) FLANGED HANDLE FIXING TYPE
50	52	155	120	4	19	16	60.80	1/37	63	70	160	75	11	25	162	163	178	179	187	188	203	204
80	78	185	150	8	19	18	89.80	1/43	72	101	190	110	11	35	196	209	214	227	231	244	249	262
100	100	210	175	8	19	18	115.00	1/44	92	129	220	110	11	45	246	261	264	279	291	306	309	324

ROTARY ANGLE VALVE

- MACHINO, SPECIAL ELBOW AND HOSE JOINT TYPE ARE AVAILABLE AS THE CONNECTION SOCKET, ALLOWING FOR INSTALLATION IN THE NARROW VALVE BOX.
- CAN BE USED FOR BOTH RICE AND VEGETABLE FIELDS BY CHANGING THE ATTACHMENT.

MANUAL



HANDLE FIXING TYPE



T-SHAPED HANDLE TYPE

* For the T-shaped handle type, the handle is sold separately.
Handle (long): 470ℓ
Handle (short): 150ℓ



MACHINO TYPE



EXTERNAL THREAD ELBOW

BASIC SPECIFICATIONS

VALVE TYPE——ROTARY ANGLE VALVE
SIZE——50 mm, 80 mm (2 inch, 3 inch)
BODY MATERIAL——U-PVC
SEAL MATERIAL——EPDM
CONNECTION / FLANGED——JIS10K
SOCKET——JIS
THREADED——Rc

	FLUID TEMPERATURE	MAXIMUM WORKING PRESSURE (NORMAL TEMPERATURE) MPa{kgf/cm²}	CONNECTION METHOD		
			FLANGED	SOCKET	THREADED
U-PVC	0℃ ~ 50℃	1.0 {10.2}	○	○	○

NOTES The maximum working pressure is the value including the water hammer pressure. Be careful that the maximum working pressure is not exceeded during use.
* Concerning the allowable pressure for each temperature and material, see the technical documents at the end of this catalog.

ATTACHMENT FOR EXTERNAL THREAD ELBOW

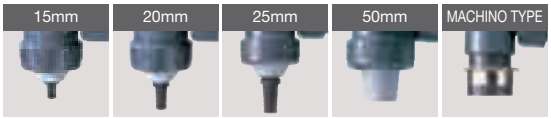

PRODUCT MODEL CODE LIST

ACTUATION	TYPE	OPERATING SYSTEM	BODY MATERIAL	SEAL MATERIAL	CONNECTION	SIZE	ATTACHIMENT
V	AG	＊＊	U	E	＊＊	＊＊＊	＊
V MANUAL VALVE	AG ANGLE VALVE	TH T-SHAPED HANDLE TYPE MH HANDLE FIXING TYPE	U U-PVC	E EPDM	SJ SOCKET NJ THREADED F1 JIS10K	050 50mm ~ 125 125mm	011 ELBOW HOSE 012 ELBOW MACHINO 05Y EXTERNAL THREAD ELBOW

MANUAL

ROTARY ANGLE VALVE

CONNECTION / FLANGED, SOCKET——JIS THREADED——Rc

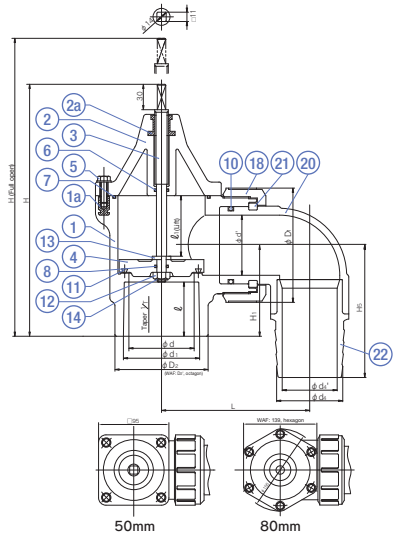

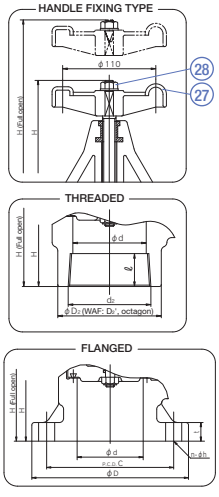

* 50A Flanged is adhesive type.

PART NO. / NAME	QTY	MATERIAL
① BODY	1	U-PVC
1a EMBEDDED BODY FITTING	4(50mm)	C3604
	6(80mm)	C3604
② BONNET	1	U-PVC
2a EMBEDDED BONNET FITTING	1	C3604
③ STEM	1	SUS304
④ DISC	1	U-PVC
⑤ BOLT	4(50mm)	SUS304
	6(80mm)	SUS304
⑥ O-RING (A)	1	EPDM
⑦ O-RING (B)	1	EPDM
⑧ O-RING (C)	1	EPDM
⑩ O-RING (E)	1	EPDM

PART NO. / NAME	QTY	MATERIAL
⑪ PACKING	1	NIPOL(1)
⑫ NUT (A)	1	SUS304
⑬ WASHER	1	SUS304
⑭ E-SHAPED STOP RING	1	SUS304
⑱ UNION NUT	1	U-PVC
⑳ ELBOW (A)	1	U-PVC
㉑ STOP RING (B)	1	PVDF
㉒ HOSE SOCKET	1	U-PVC
㉗ HANDLE (Used for the handle fixing type.)	1	PP
㉘ NUT (B) (Used for the handle fixing type.)	1	SUS304

NOTES (1) NIPOL is a registered trademark of Zeon Corporation.

■ JIS (Unit: mm)

mm	T-SHAPED HANDLE TYPE						HANDLE FIXING TYPE						H	H5	d	d'	D1	D2	D2'	L	ℓ1 Lift	FLANGED JIS 10K					SOCKET			THREADED			
	FLANGED		SOCKET		THREADED		FLANGED		SOCKET		THREADED											D	C	n	h	t	d1	1/T	ℓ	d2	ℓ	d4	d4'
	H	H (FULL OPEN)	H	H (FULL OPEN)	H	H (FULL OPEN)	H	H (FULL OPEN)	H	H (FULL OPEN)	H	H (FULL OPEN)																					
50	263	308	247	292	247	292	275	320	259	304	259	304	100	129	52	51	96	80	77.5	147	45	155	120	4	19	20	60.8	1/37	63	Rc2	28	52	40
80	307	379	297	369	297	369	319	391	309	381	309	381	118.5	154	78	70	133	110	105	172.5	72	185	150	8	19	22	89.6	1/49	64	Rc3	35	77	65

ANGLE BUTTERFLY VALVE 80 mm, 100 mm

- THE WATER FEED RATE IS APPROX. 1.5 TIMES THAT OF CONVENTIONAL ANGLE VALVE 80 mm.
  (When 6 units of angle valve 80 mm is required for a rice field, 4 units of angle butterfly valve 100 mm can supply necessary water.)
  * The water feed rate varies depending on the piping conditions.
- CAN BE CONNECTED TO 2 TYPES OF ATTACHMENT: NOZZLE (MACHINO) AND HOSE SOCKET.
  (Can be used for irrigation in fields and cleaning of agricultural machines by connecting a hose.)



NOZZLE (MACHINO)



HOSE SOCKET

BASIC SPECIFICATIONS

VALVE TYPE — ANGLE BUTTERFLY VALVE TYPE 80 mm, 100 mm
SIZE — 80 mm, 100 mm (3 inch, 4 inch)
BODY MATERIAL — PDCPD / U-PVC / HI-PVC
SEAL MATERIAL — EPDM
CONNECTION / FLANGED — JIS10K

	FLUID TEMPERATURE	MAXIMUM WORKING PRESSURE (NORMAL TEMPERATURE) MPa{kgf/cm²}
PDCPD / U-PVC / HI-PVC	0℃ ~ 50℃	1.0 {10.2}

NOTES The product is packaged in a state in which the primary side flange and bolts and nuts are not assembled. The lever must be operated slowly. Rapid closure may cause water hammer.

PRODUCT MODEL CODE LIST

ACTUATION	TYPE	OPERATING SYSTEM	BODY MATERIAL	SEAL MATERIAL	UPSTREAM CONNECTION	STANDARD	SIZE	DOWNSTREAM CONNECTION
V	AB	LV	D	E	S	J	* * *	* * *
V MANUAL VALVE	AB ANGLE BUTTERFLY VALVE	LV LEVER	D PDCPD	E EPDM	S SOCKET	J JIS	080 80mm ~ 100 100mm	012 NOZZLE(MACHINO) 011 HOSE SOCKET 05Y EXTERNAL THREAD ELBOW

MANUAL

ANGLE BUTTERFLY VALVE 80 mm, 100 mm

CONNECTION / FLANGED——JIS

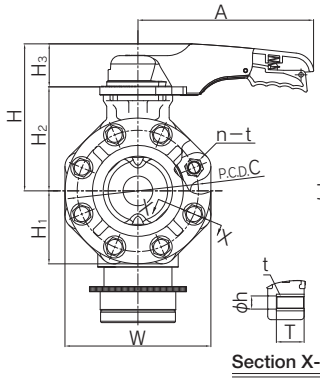

Section X-X

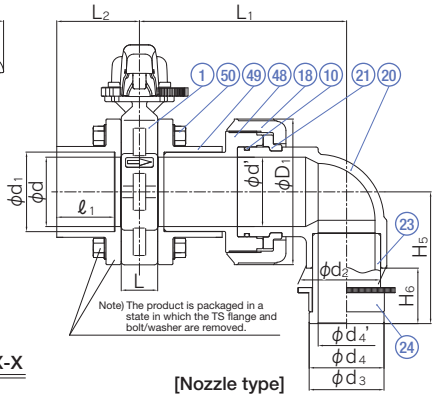

[Nozzle type]

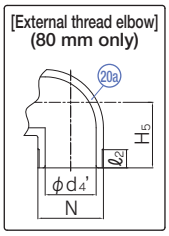

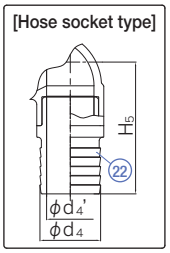

PART NO. / NAME	QTY	MATERIAL
1 LUG BUTTERFLY VALVE	1	PDCPD/PP/EPDM
10 O-RING (E)	1	EPDM
18 UNION NUT	1	U-PVC
20 ELBOW (A)	1	U-PVC
20a ELBOW (A)	1	HI-PVC
21 STOP RING (B)	1	PVDF
22 HOSE SOCKET	1	U-PVC
23 NOZZLE (A)	1	U-PVC
24 NOZZLE (B)	1	BC6
48 SPECIAL FITTING	1	U-PVC
49 TS FLANGE	2	HI-PVC
50 BOLT, WASHER	16	SUS304

■ JIS (Unit: mm)

mm	H	H1	H2	H3	NOZZLE					HOSE SOCKET				EXTERNAL THREAD ELBOW				ϕd	ϕd'	ϕd1	ϕd2	ℓ1	ϕD1	L1	L2	A	W	JIS10K c	JIS10K n	JIS10K ϕh	T	t
					H5	H6	ϕd3	ϕd4	ϕd4'	H5	ϕd4	ϕd4'	h	H5	ϕd4'	ℓ2	N															
80	191	94	135	56	154	74	105	81.5	62	154	77	65	19	90	70	25	TM50 P=3	77	77	89.6	91	64	133	207	96	250	193	150	8	19	40	M16 WIDTH ACROSS FLATS 24
100	206	105	150	56	190	80	140	108	82	228	105	82	19	-	-	-		102	100	114.7	116	84	210	299	120	250	217	175	8	19	40	M16 WIDTH ACROSS FLATS 24

ASAHI AV

FLOW METER

P.193 ULTRASONIC-VOLTEX FLOW METER ASUSV SERIES

P.195 IMPELLER FLOW METER ASIP80 SERIES

P.196 IMPELLER FLOW METER ASSPX SERIES

P.197 INSERTION ELECTROMAGNETIC FLOW METER ASEX80 SERIES

P.198 ULTRASONIC FLOW METER – DOPPLER ULTRASONIC FLOW METER

P.198 • ASDX-25 STATIONARY

P.198 • ASPX-20 PORTABLE

P.199 • ASSX-30 PORTABLE

P.199 • ASSX-40 STATIONARY

P.200 ULTRASONIC FLOW METER – TIME DIFFERENCE ULTRASONIC FLOW METER

P.200 • ASISTT-D6000 (S/M/L) STATIONARY

P.200 • ASISTT-D7000 PORTABLE

P.200 • ASISTT-D9000 AFFORDABLE TYPE



ULTRASONIC-VOLTEX FLOW METER ASUSV SERIES

- THE WETTED PART IS MADE OF CORROSION-RESISTANT ALL-PLASTIC MATERIAL (ANTI-CORROSIVE RESIN), MAKING THE METER IDEAL FOR CHEMICAL SOLUTION LINES FOR CHEMICAL, STEEL, ELECTROLYSIS, SEMICONDUCTOR AND PURIFICATION FACILITIES.
- STABLE AND HIGHLY ACCURATE FLOW MEASUREMENT WITH AN ACCURACY OF +/-1.0% (RD).
- KARMAN VORTEX DETECTION USING ULTRASONIC SENSOR PROTECTED FROM THE EFFECTS OF MECHANICAL NOISES SUCH AS PIPE VIBRATION.

BASIC SPECIFICATIONS

VALVE TYPE		ULTRASONIC-VOLTEX FLOW METER ASUSV SERIES
CONNECTION METHOD		FLANGED, WAFER
SIZE		FLANGED ····· 20—50 mm WAFER ····· 20—100 mm
VALVE PARTS	WETTED PARTS	FLANGED ····· PVDF WAFER ····· U-PVC, PVDF
	MEASUREMENT ACCURACY	±1% R.D
	FLUID TEMPERATURE	U-PVC ····· 0～ 55°C PVDF ····· -10～100°C
	MAXIMUM WORKING FLUID PRESSURE	1.0 MPa (at normal temp.)
SENSOR PARTS	DISPLAY	TOTAL INTEGRATING / INSTANTANEOUS FLOW RATE / % FLOW RATE / RESET INTEGRATING FLOW RATE (The display is switched by a magnet from the outside.)
	ANALOG OUTPUT	4 - 20 mA, TWO-WIRE, LOAD RESISTANCE: 300Ω MAX.
	ALARM OUTPUT	<OPEN COLLECTOR OUTPUT> INTEGRATING PULSE OUTPUT / UPPER AND LOWER LIMIT OUTPUT / ALARM OUTPUT Either can be selected.
	CASE MATERIAL	Polycarbonate
	POWER SOURCE	DC 24V ±10%
	AMBIENT TEMPERATURE	U-PVC ····· 0～55°C, 5～80%RH PVDF ····· -10～60°C, 5～80%RH
	PROTECTIVE STRUCTURE	IP 66 equivalent. (Avoid direct sunlight.)



MEASURING RANGE AUTOMATIC

SIZE (mm)	MINIMUM FLOW RATE (m^3/h) <MEASUREMENT ACCURACY: ±1.0%RD > KINEMATIC VISCOSITY x 10^{-6} m^2/s (cst)					MAXIMUM FLOW RATE (m^3/h)
	1	2	3	4	5	
20	0.9	1.8	2.7	3.6	4.5	5.4
25	1.4	2.8	4.2	5.6	7	8.5
40	3.6	7.2	10.8	14.4	18	22
50	5.9	11.8	17.7	23.6	29.5	34
80	13.4	26.8	40.2	53.6	67	88
100	22.6	45.2	67.8	90.4	113	137
FLOW RATE	0.8m/sec	1.6m/sec	2.4m/sec	3.2m/sec	4.0m/sec	5.0m/sec

NOTES To maintain the measurement accuracy, provide a straight pipe of 10D on the upper-flow side and of 5D in the downstream. (D = Inside pipe diameter)

INSTALLATION EXAMPLE (WAFER)

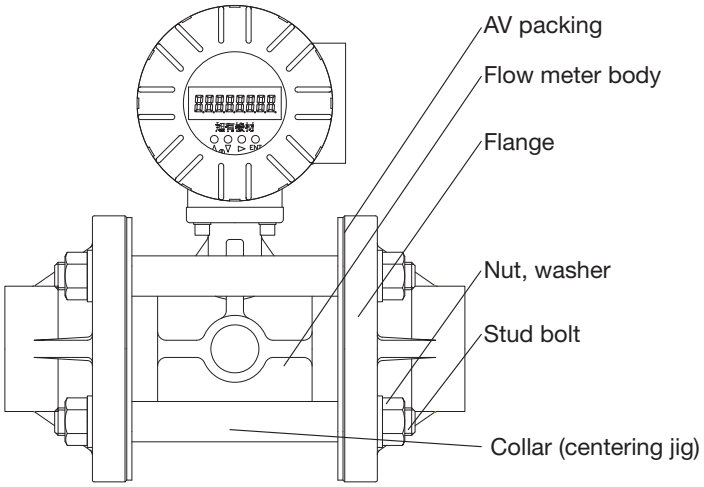

TIGHTENING TORQUE [N·m]	20mm	25mm	40mm	50mm	80mm	100mm
U-PVC	15	15	20	25	30	30
PVDF	15	15	20	25	30	30

AUTOMATIC

ULTRASONIC-VORTEX FLOW METER ASUSV SERIES

CONNECTION / FLANGED, WAFER——JIS

WAFER

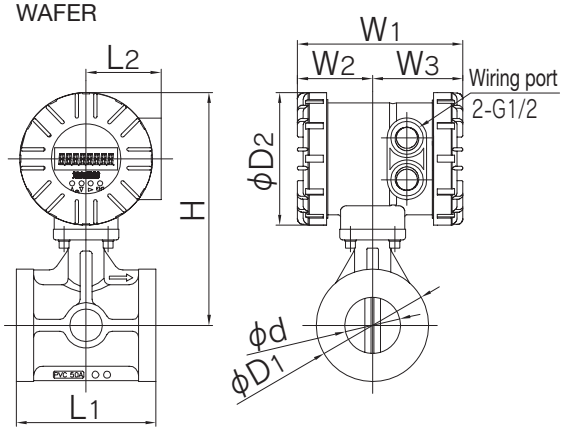

FLANGED

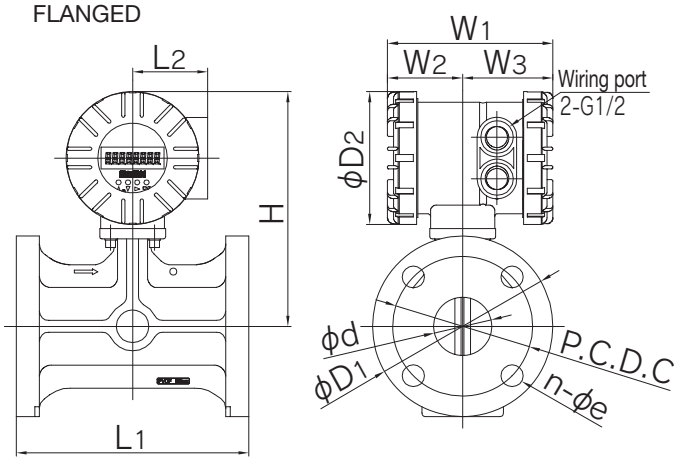

JIS (Unit: mm)

						WAFER				FLANGED (JIS10K)						
mm	L2	W1	W2	W3	ϕD2	L1	H	ϕD1	ϕd	L1	H	ϕD1	ϕd	C	n	e
20	64.5	138	62.5	75.5	114	85	187.5	53	19	200	180	100	19	75	4	15
25						93	190	62	24		190	125	24	90		
40						106	197.5	77	38.5		197	140	38.5	105		19
50						120	202.5	96.5	48.5		204	155	48.5	120		
80						160	225	127	72.5	-	-	-	-	-	-	-
100						180	239.5	155.5	94	-	-	-	-	-	-	-

IMPELLER FLOW METER ASIP80 SERIES

- INSERTION TYPE USING SPECIAL FITTING.
- ALL THE WETTED PARTS ARE MADE OF CHEMICAL-RESISTANT PLASTIC (SO THAT THE METER CAN BE USED FOR SEA WATER LINES AND VARIOUS CHEMICAL SOLUTION LINES).

BASIC SPECIFICATIONS

VALVE TYPE		IMPELLER FLOW METER ASIP80 SERIES	
SIZE		ASIP81(P/Y/K) ····· 15mm～80mm ASIP82(P/Y/K) ····· 100mm～150mm	
CONNECTION METHOD		SOCKET, FLANGED	
MATERIAL	SENSOR BODY	WORKING TEMPERATURE	HI-PVC ····· 50°C PP ····· 60°C PVDF ····· 90°C
		WORKING PRESSURE	1.0MPa
	IMPELLER	PVDF	
	SHAFT	ZIRCONIUM, SILICON-CARBIDE	
	BEARING	RUBY	
	O-RING	FKM(EPDM)	
	SPECIAL FITTING	U-PVC, HI-PVC, C-PVC (See TABLE 1.)	
MEASUREMENT FLUID		FLUID (EXCEPT HIGH VISCOSITY FLUID AND SLURRY)	
MAXIMUM WORKING TEMPERATURE		0～90°C	
FLOW RATE		0.2 - 9 m/s (See TABLE 2.)	
RANGEABILITY		1:45	
MEASUREMENT ACCURACY		±1.5%(FS)	
POWER SOURCE		DC6 – 24V (Consumption current: 8 mA)	
OUTPUT SIGNAL		3-WIRE, CURRENT SINKING PULSE (NPN) (20 mA Max.)	
CABLE		3-CON (3.6 m length)	
FITTING INSTALLATION		Upper flow: 10D Min. Downstream: 5D Min. (D: Inside pipe diameter)	



AUTOMATIC

TABLE 1 MAX. OPERATING FLUID PRESSURE AND TEMPERATURE FOR SPECIAL FITTING

TEMP. (°C)	PRESSURE (MPa)		
	U-PVC HI-PVC	C-PVC	
	15mm ～ 150mm	15mm ～ 50mm	65mm ～ 150mm
20	1	1	1
30	0.9	1	0.8
40	0.7	1	0.8
50	0.3	0.6	0.6
60	–	0.6	0.6
70	–	0.4	0.4
80	–	0.2	0.2
90	–	0.2	0.2

TABLE 2 MEASURING RANGE AND K-FACTOR

SIZE (mm)	FLOW RATE (m³/h) Min	～	Max	K-FACTOR (cc/pulse)
15	0.14	～	6.51	7.1
20	0.23	～	10.18	10.9
25	0.35	～	15.89	16.1
32	0.54	～	24.44	26.8
40	0.90	～	40.69	47.2
50	1.47	～	66.16	66.2
65	2.54	～	114.17	102.2
80	3.35	～	150.80	139.7
100	5.65	～	254.34	213.0
125	8.83	～	397.40	355.4
150	12.05	～	542.15	465.0

NOTES (1) The value of K-factor is only a reference value.
(2) Obtain the maximum frequency for each size by calculation.
Max. frequency = Max. flow rate / K-factor
(Hz) (cc/s) (cc/pulse)

AUTOMATIC

IMPELLER FLOW METER ASIP80 SERIES

CONNECTION / FLANGED, SOCKET——JIS

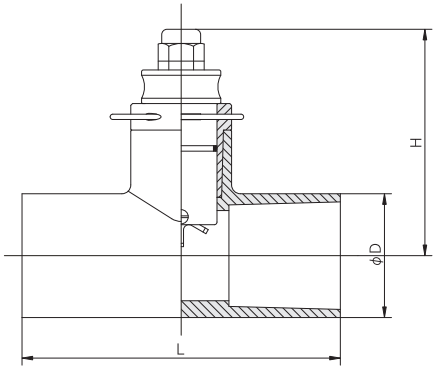

● FLANGED

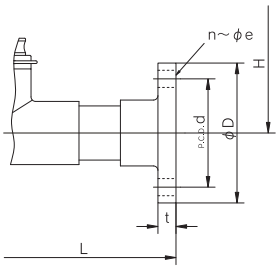

■ JIS (Unit: mm)

mm	SOCKET						FLANGED										
	U-PVC/HI-PVC			U-PVC/HI-PVC			L	H	JIS 10K					JIS 5K			
	L	H	D	L	H	D			D	d	t	n	e	D	d	t	n	e
15	164	119	57	150	119	56	500	119	95	70	14	4	15	80	60	9	4	12
20	164	121	57	150	121	56	500	121	100	75	15	4	15	85	65	10	4	12
25	164	121	57	150	121	56	500	121	125	90	15	4	19	95	75	10	4	12
32	164	122	57	150	122	56	500	122	135	100	16	4	19	115	90	12	4	15
40	164	125	57	150	125	56	500	125	140	105	16	4	19	120	95	12	4	15
50	180	128	70	164	128	69	500	128	155	120	20	4	19	130	105	14	4	15
65	190	133	87	190	133	87	500	133	175	140	22	4	19	155	130	14	4	15
80	200	136	102	200	136	102	500	136	185	150	22	8	19	180	145	14	4	19
100	250	168	130	250	168	130	700	168	210	175	22	8	19	200	165	16	8	19
125	322	176	157	-	-	-	700	176	250	210	24	8	23	235	200	16	8	19
150	390	182	186	-	-	-	700	182	280	240	26	8	23	265	230	18	8	19

NOTES (1) Piping condition) It is recommended to secure a fitting installation section of 10D on the upper flow side and 5D in the downstream. (D = Inside pipe diameter)
Wiring condition) For wire extension, it is recommended to use shielded wires. (2) For display of flow rate, an indicator is required separately.
(3) The appearance and shape of assembled parts may slightly differ from the diagram depending on the sizes. (4) Note that the following fittings are not available:
Socket, JIS10K flange……HI-PVC/C-PVC (125 mm, 150 mm) JIS 5K flange……HI-PVC (125 mm, 150 mm), C-PVC (80 mm – 150 mm)

IMPELLER FLOW METER ASSPX SERIES

- CORROSION-RESISTANT FLOW METER FOR LOW FLOW RATES.
- COMPACT DESIGN IDEAL FOR PIPING IN MACHINERY.

BASIC SPECIFICATIONS

VALVE TYPE		IMPELLER FLOW METER ASSPX SERIES
CONNECTION METHOD		ASSPX-3/8inch·····Rc 3/8 ASSPX-1/2inch·····Rc 1/2 ASSPX-3/4inch·····Rc 3/4 ASSPX-1inch·····Rc 1
MATERIAL	BODY MATERIAL	PP, PTFE
	COVER	PP, PTFE (Acrylic)
	ROTOR	PVDF
	SHAFT	ZIRCONIUM, SILICON-CARBIDE
	BEARING	RUBY
	O-RING	FKM, (EPDM)
MEASUREMENT FLUID		FLUID (EXCEPT HIGH VISCOSITY FLUID AND SLURRY)
MAXIMUM WORKING TEMPERATURE		−10~70°C
WORKING PRESSURE		1.0MPa
FLOW RATE		See TABLE 1.
MEASUREMENT ACCURACY		±1%(FS)
POWER SOURCE		DC 6 – 24V (Consumption current: 8 mA)
OUTPUT SIGNAL		3-WIRE, CURRENT SINKING PULSE (NPN) (20 mA Max.)
CABLE		3-CON (3.6 m length)

AUTOMATIC



TABLE 1 MEASURING RANGE AND K-FACTOR

CONNECTION SIZE	INSTALLATION POSTURE	FLOW RATE (L/min)	RANGE ABILITY	K-FACTOR (cc/pulse)
3/8 inch	PIPING IS HORIZONTAL AND SHAFT IS VERTICAL	0.2~ 20	1:100	1.122
	OTHER CASES	0.4~ 20	1: 50	
1/2 inch	PIPING IS HORIZONTAL AND SHAFT IS VERTICAL	0.4~ 40	1:100	2.133
	OTHER CASES	0.6~ 40	1: 65	
3/4 inch	PIPING IS HORIZONTAL AND SHAFT IS VERTICAL	0.8~ 80	1:100	2.871
	OTHER CASES	1.2~ 80	1: 65	
1 inch	PIPING IS HORIZONTAL AND SHAFT IS VERTICAL	2.0~200	1:100	5.287
	OTHER CASES	3.0~200	1: 65	

NOTES (1) The value of K-factor is only a reference value.
(2) Obtain the maximum frequency for each size by calculation.
Max. frequency (Hz) = Max. flow rate (cc/s) / K-factor (cc/pulse)

AUTOMATIC

IMPELLER FLOW METER ASSPX SERIES

CONNECTION / THREADED——Rc

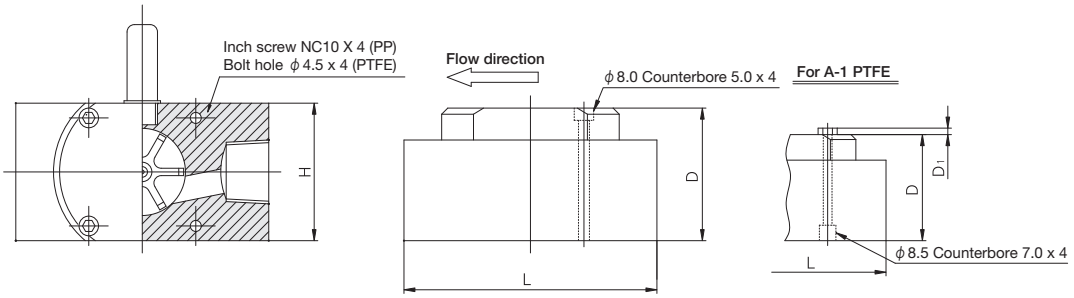

■ JIS (Unit: mm)

SIZE	SOCKET L	SOCKET H	SOCKET D	PTFE D1
RC 3/8	104	56	54	3.0
RC 1/2	104	56	54	3.0
RC 3/4	104	56	54	3.0
RC 1	104	56	54	3.0

NOTES (1) For wire extension, it is recommended to use shielded wires.
(2) For display of flow rate, an indicator is required separately.
(3) The cover attachment method varies depending on the materials.
In the case of PP, the cover is tightened using hexagon socket head cap screws (inch screws).
In the case of PTFE, it is sandwiched between hexagon socket head cap screws and inch screws. See A-1.

INDICATOR ASFT415 SPECIFICATION

TYPE	ASFT415-W	ASFT415-M
MOUNTING METHOD	WALL MOUNTED MODEL	INTEGRATED MODEL
FLOW INDICATE	INSTANT FLOW INDICATION (6 Digit LCD·Upper Display), INTEGRATION FLOW INDICATION (8 Digit LCD·Bottom Display)	
ENVIRONMENT TEMPARETURE	0 - 70℃	
ENVIRONMENT TEMPERATURE	SYNCHRONIZED PULSE SENSOR, SYNCHRONIZED PULSE INTEGRATION	
POWER SOURCE	1pc 3V Original Lithium Battery (Lifetime: APPROX. 3 - 5 Years)	
PROTECTIVE STRUCTURE	NEMA-4X (IP65 Equivalent)	
DIMENSION (WEIGHT)	H99×W99×D73.5 (Approx. 500g)	



ASFT415-W
(WALL MOUNTED MODEL)



ASFT415-M
(INTEGRATED MODEL)

Sea Metrics Manufacture in U.S.A.

INSERTION ELECTROMAGNETIC FLOW METER ASEX80 SERIES

- INSERTION TYPE USING SPECIAL FITTING.
- ALL THE WETTED PARTS ARE MADE OF CHEMICAL-RESISTANT PLASTIC (SO THAT THE METER CAN BE USED FOR SEA WATER LINES AND VARIOUS CHEMICAL SOLUTION LINES).

BASIC SPECIFICATIONS

VALVE TYPE		INSERTION ELECTROMAGNETIC FLOW METER ASEX80 SERIES
SIZE		ASEX81 ····· 25mm~80mm ASEX82 ····· 100mm~150mm
CONNECTION		FLANGED, SOCKET
MATERIAL	SENSOR (DETECTOR)	BODY ····· HI-PVC ELECTRODE····· HASTELLOY C
	SENSOR	HOUSING ····· ALUMINUM
	O-RING	EPDM, FKM
	SPECIAL FITTING	U-PVC, HI-PVC
FLUID TO BE MEASURED		GENERAL CONDUCTIVE LIQUIDS. The minimum conductivity must be 20 μs/cm or higher. <Reference> Tap water 100 - 200 μs/cm
FLUID TEMPERATURE		0~50°C
WORKING PRESSURE		1.0 MPa (See TABLE 1.)
FLOW RANGE		0.2 - 6.0 m/s (See TABLE 2.)
ACCURACY		±1.0% (FS)
POWER SOURCE		DC12 - 24V (Consumption current: 250 mA)
OUTPUT SIGNAL		CURRENT SINKING PULSE (NPN) (Load capacity: DC 30V, 6 mA or less)
CABLE		4-CON SHIELD LINE (Approx. 5 m)
ELECTRIC WIRING PORT		WATER RESISTANT CONNECTOR (Applicable wire dia.: Φ8 max.)
PROTECTIVE STRUCTURE		NEMA 4X (IP65 equivalent)

NOTE During batch operation (for cumulative usage management of the fluid in particular), avoid using an insertion electromagnetic flow meter.

AUTOMATIC



TABLE 1 WORKING PRESSURE VS. TEMPERATURE

SIZE (mm)	PRESSURE (MPa)			
	20°C	30°C	40°C	50°C
25	1.0	0.9	0.7	0.3
32				
40				
50				
65				
80				
100				
125				
150				

TABLE 2 MEASURING RANGE AND K-FACTOR

SIZE (mm)	FLOW RATE (m^3/h) Min	~	Max	K-FACTOR (cc/pulse)
25	0.35	~	10.60	6.76
32	0.54	~	16.29	9.94
40	0.90	~	27.13	16.12
50	1.47	~	44.10	23.09
65	2.54	~	76.12	37.11
80	3.35	~	100.53	50.15
100	5.65	~	169.56	82.92
125	8.83	~	264.94	132.10
150	12.05	~	361.43	175.44

NOTES (1) The value of K-factor is only a reference value.
(2) Obtain the maximum frequency for each size by calculation.
Max. frequency (Hz) = Max. flow rate (cc/s) / K-factor (cc/pulse)

AUTOMATIC

INSERTION ELECTROMAGNETIC FLOW METER ASEX80 SERIES

CONNECTION / FLANGED, SOCKET——JIS

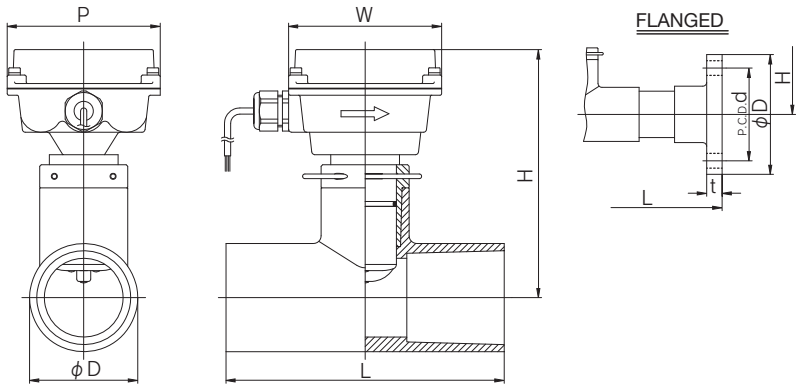

■ JIS (Unit: mm)

mm	SOCKET L	SOCKET H	FLANGED L	JIS 10K D	JIS 10K d	JIS 10K t	JIS 10K n	JIS 10K e	JIS 5K D	JIS 5K d	JIS 5K t	JIS 5K n	JIS 5K e	H	W	P
25	164	57	500	125	90	15	4	19	95	75	10	4	12	154	99	99
32	164	57	500	135	100	16	4	19	115	90	12	4	15	155	99	99
40	164	57	500	140	105	16	4	19	120	95	12	4	15	158	99	99
50	180	70	500	155	120	20	4	19	130	105	14	4	15	161	99	99
65	190	87	500	175	140	22	4	19	155	130	14	4	15	166	99	99
80	200	102	500	185	150	22	8	19	180	145	14	4	19	169	99	99
100	250	130	700	210	175	22	8	19	200	165	16	8	19	200	99	99
125	322	157	700	250	210	24	8	23	235	200	16	8	19	208	99	99
150	390	186	700	280	240	26	8	23	265	230	18	8	19	214	99	99

NOTES (1) Piping condition) It is recommended to secure a fitting installation section of at least 10D on the upper flow side and 5D in the downstream. (D = Inside pipe diameter)
Wiring condition) For wire extension, use shielded wires. (2) For display of flow rate, an indicator is required separately.
(3) The appearance and shape of assembled parts may slightly differ from the diagram depending on the sizes. (4) Note that the following fittings are not available for this flow meter:
Socket, Flange (JIS10K/JIS5K)……Material HI-PVC (125 mm, 150 mm), Material C-PVC, PVDF

ULTRASONIC FLOW METER DOPPLER ULTRASONIC FLOW METER

AUTOMATIC ASDX-25 STATIONARY

- APPLICABLE TO VARIOUS SHAPES AND TYPES, INCLUDING DITCHES, OPEN CONDUITS, HORSESHOE-SHAPED, INVERTED TRAPEZOID-SHAPED AND SQUARE-SHAPED PIPES.
- INDEPENDENT FROM THE EFFECTS OF FOREIGN SUBSTANCES OR AIR BUBBLE.
- EQUIPPED WITH DC 4 – 20 mA OUTPUT, 4 RELAY CONTACTS.
- ULTRASONIC WATER LEVEL SENSOR THAT DELIVERS STABLE PERFORMANCE WITH NO MAINTENANCE (OPTIONAL).

BASIC SPECIFICATIONS

VALVE TYPE	ASDX25
FLOW RANGE	–6m/s～6m/s
ACCURACY (FLOW RATE)	±2.00% (FS) or 0.05 m/s
WATER LEVEL MEASUREMENT	0.25～2m(AGKU2000) 0.3～8m(MSP420)
ACCURACY (WATER LEVEL)	±0.5%(FS)
WORKING TEMPERATURE RANGE	–10°C～50°C
DISPLAY	4× 20 CHARACTERS, LCD
LEVEL INPUT	DC 4～20mA
OUTPUT	DC 4 – 20 mA, RELAY CONTACT (4 CONTACTS)
CABLE LENGTH	10m(MAX 30m*)
MATERIAL	BODY ·····POLYCARBONATE (IP65) SENSOR·····POLYURETHANE/SUS (IP68)
Power supply	AC100V(AC200V*, DC24V*)
WEIGHT	APPROX. 1 kg

* Optional



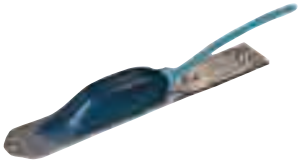

AUTOMATIC ASPX-20 PORTABLE

- APPLICABLE TO VARIOUS SHAPES AND TYPES, INCLUDING DITCHES, OPEN CONDUITS, HORSESHOE-SHAPED, INVERTED TRAPEZOID-SHAPED AND SQUARE-SHAPED PIPES.
- INDEPENDENT FROM THE EFFECTS OF FOREIGN SUBSTANCES OR AIR BUBBLE.
- PORTABLE DESIGN SO THAT THE METER CAN BE USED IN VARIOUS PLACES.
- INTEGRATED WITH WATER LEVEL SENSOR, EASY TO INSTALL.

BASIC SPECIFICATIONS

VALVE TYPE	ASPX20
FLOW RANGE	–6m/s～6m/s
ACCURACY (FLOW RATE)	±2.00% (FS) or 0.05 m/s
WATER LEVEL MEASUREMENT	0～3m
ACCURACY (WATER LEVEL)	±0.5%(FS)
WORKING TEMPERATURE RANGE	–10°C～50°C
DISPLAY	4× 20 CHARACTERS, LCD
DATA LOGGER	STANDARD 512 KB (MAX. 8 MB)
OUTPUT	RS232C (Dedicated software used)
CABLE LENGTH	7m
MATERIAL	VALVE PARTS··· FRP (IP67) SENSOR····· POLYURETHANE/SUS (IP68)
Power supply	SIZE D BATTERY × 8 (Operable up to 6 months.)
WEIGHT	APPROX. 2.5 kg



ULTRASONIC FLOW METER DOPPLER ULTRASONIC FLOW METER

AUTOMATIC ASSX-30 PORTABLE

- IMPROVED NOISE RESISTANCE DUE TO DFD FUNCTION.
- RECHARGEABLE TYPE THAT REQUIRES NO POWER SUPPLY.
- SMALL TO LARGE SIZES CAN BE MEASURED BY A SINGLE UNIT.
- EASY OPERATION REQUIRING ONLY QUICK MOUNTING OF TRANSDUCER AND INNER DIAMETER INPUT.
- CAPABLE OF STORING UP TO 90,000 DATA POINTS.

BASIC SPECIFICATIONS

VALVE TYPE	ASSX-30
MEASURING RANGE	±0.06～10m/s
ACCURACY	±1.0%(FS)
APPLICABLE PIPE SIZE	12～3,000mmϕ
EXTERNAL OUTPUT	DC 4 - 20 mA (Load resistance: 800 Ω) RS232C Interface
POWER	AC100V/AC200V, rechargeable battery Operation: 12 hrs (Charge: 8 hrs)
DISPLAY	Instantaneous/integrating flow rate
TEMPERATURE RANGE	BODY (SENSOR) ····· –20～60°C TRANSDUCER ····· –40～120°C
BODY (SENSOR)	NEMA–6 (IP67 equivalent)
TRANSDUCER	Clamp-on type 5 m cable (150 m Max.*)
WEIGHT	Approx. 4.9 kg
PARAMETER SETTING	Keypad entry

* Optional



AUTOMATIC ASSX-40 STATIONARY

- IMPROVED NOISE RESISTANCE DUE TO DFD FUNCTION.
- PARAMETERS CAN BE EASILY ENTERED FROM THE PANEL, ALLOWING FOR ATTACHMENT, REMOVAL AND RELOCATION.
- CAPABLE OF STORING UP TO 90,000 DATA POINTS.

BASIC SPECIFICATIONS

VALVE TYPE	ASSX-40
MEASURING RANGE	±0.06～10m/s
ACCURACY	±1.5%(FS)
APPLICABLE PIPE SIZE	12～3,000mmϕ
EXTERNAL OUTPUT	DC 4 - 20 mA (Load resistance: 1 KΩ or less) RS232C Interface Relay contact output*
POWER	AC90-132V(50/60Hz)/AC190-250V(50/60Hz) Switch select type DC12-18V*
DISPLAY	Instantaneous/integrating flow rate
TEMPERATURE RANGE	BODY (SENSOR) ····· –20～60°C TRANSDUCER ····· –40～120°C
BODY (SENSOR)	NEMA-4X (IP65 equivalent)
TRANSDUCER	Clamp-on type 6 m cable (150 m Max.*)
WEIGHT	Approx. 5.4 kg
PARAMETER SETTING	Keypad entry / Entry from PC using dedicated software

* Optional



ULTRASONIC FLOW METER TIME DIFFERENCE ULTRASONIC FLOW METER

AUTOMATIC ASISTT-D6000 (S/M/L) STATIONARY



- PARAMETERS CAN BE EASILY ENTERED FROM THE PANEL, ALLOWING FOR ATTACHMENT, REMOVAL AND RELOCATION.
- DEPENDING ON THE PIPE SIZE, 3 TYPES ARE AVAILABLE: ASISTT-D6000S (25 mm – 200 mm)
  ASISTT-D6000M (250 mm – 500 mm)
  ASISTT-D6000L (550 mm – 3,000 mm)

BASIC SPECIFICATIONS

TYPE	ASISTT-D6000(S/M/L)
MEASURING RANGE	±0 – 15 m/s (positive/negative direction indicated)
ACCURACY	±0.8%(FS)
LINEARITY	±0.1%(FS)
REPRODUCIBILITY	±0.2%(FS)
APPLICABLE PIPE SIZE	S ·····25mm～200mmϕ M ·····250mm～500mmϕ L·····550mm～3,000mmϕ
EXTERNAL OUTPUT	DC 4 - 20 mA (Load resistance: 1 KΩ or less) RS232C Interface Relay contact output*

* Optional

POWER	AC90-132V(50/60Hz)/AC190-250V(50/60Hz) Switch select type
DISPLAY	Instantaneous/integrating flow rate, flow velocity
TEMPERATURE RANGE	BODY (SENSOR)·····–20～60°C TRANSDUCER ·····–40～120°C (240°C Max.*)
BODY (SENSOR)	NEMA-4X (IP65 equivalent)
TRANSDUCER	Clamp-on type 9 m cable (300 m Max.*)
WEIGHT	Approx. 5.4 kg
PARAMETER SETTING	Keypad entry / Entry from PC using dedicated software

AUTOMATIC ASISTT-D7000 PORTABLE



- UNIQUE SIGNAL PROCESSING REDUCES THE EFFECTS OF FLUID CONDITIONS.
- RECHARGEABLE TYPE THAT REQUIRES NO POWER SUPPLY.
- EQUIPPED WITH BUILT-IN DATA LOGGER.
- IDEAL FOR PUMP CAPACITY CHECK AND BACK-UP OF EXISTING FLOW METER.

BASIC SPECIFICATIONS

TYPE	ASISTT-D7000
MEASURING RANGE	±0 – 15 m/s (positive/negative direction indicated)
ACCURACY	±0.8%(FS)
LINEARITY	±0.1%(FS)
REPRODUCIBILITY	±0.2%(FS)
APPLICABLE PIPE SIZE	25～3,000mmϕ
EXTERNAL OUTPUT	DC 4 - 20 mA (Load resistance: 1 KΩ or less) RS232 interface
POWER	AC100V/AC200V, rechargeable battery Operation: 8 hrs (Charge: 12 hrs)

* Optional

DISPLAY	Instantaneous/integrating flow rate, flow velocity
TEMPERATURE RANGE	BODY (SENSOR)·····–20～60°C TRANSDUCER ·····–40～120°C (240°C Max.*)
BODY (SENSOR)	NEMA–6 (IP67 equivalent)
TRANSDUCER	Clamp-on type 5 m cable (300 m Max.*)
WEIGHT	Approx. 5.0 kg
PARAMETER SETTING	Keypad entry

AUTOMATIC ASISTT-D9000 AFFORDABLE TYPE

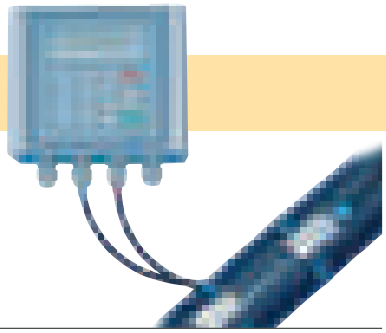

- LIGHTWEIGHT AND COMPACT SIZE
- EQUIPPED WITH NUMERIC KEYPAD, ALLOWING SETTINGS TO BE CONFIGURED USING THE MAIN UNIT (SENSOR).

BASIC SPECIFICATIONS

TYPE	ASISTT-D9000
MEASURING RANGE	±0～12m/s
ACCURACY	±1.0% (FS)
LINEARITY	±0.2% (FS)
REPRODUCIBILITY	±0.3% (FS)
APPLICABLE PIPE SIZE	25～3,000mmϕ
EXTERNAL OUTPUT	DC4～20mA
POWER	AC90V～AC245V DC10V～DC36V*

* Optional

DISPLAY	Instantaneous/integrating flow rate, flow velocity
TEMPERATURE RANGE	BODY (SENSOR)·····–40～60°C TRANSDUCER ·····–40～100°C (150°C Max.*)
BODY (SENSOR)	NEMA-4X (IP66 equivalent)
TRANSDUCER	Clamp-on type 9 m cable (300 m Max.*)
WEIGHT	Approx. 3.5 kg
PARAMETER SETTING	Keypad entry

ASAHIAV

ASAHI AV

APPENDICES

P.203 WORKING PRESSURE VS. TEMPERATURE

P.215 Cv VALUE FOR EACH OPENING DEGREE

P.221 PIPE BOLT DIMENSIONS

P.225 PRODUCT WEIGHT LIST (REFERENCE)

P.237 PROPER FLOW RANGE

P.239 PRODUCT CERTIFICATION TARGET LIST

P.240 ASAHI AV MANUAL VALVE DISCONTINUED PRODUCT LIST

P.241 PRECAUTIONS IN HANDLING AND USE

P.244 WARRANTY INFORMATION OF OUR PRODUCTS

P.244 PRECAUTIONS TO TAKE WHEN EXPORTING OUR PRODUCTS

WORKING PRESSURE VS. TEMPERATURE

PVDF — U-PVC — HI-PVC — PDCPD
PP — C-PVC — FCD-S

NOTE Make sure that the temperature and pressure are within the working range during operation. (If the tolerance range is exceeded during use, the valve may be damaged.)

DIAPHRAGM VALVE TYPE 14

MANUAL 15 mm — 50 mm

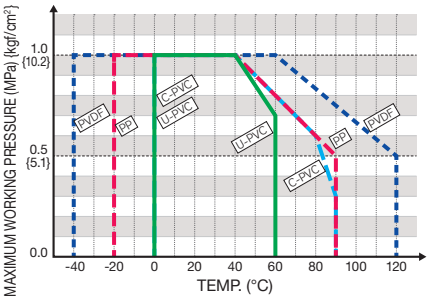

MANUAL 65 mm — 100 mm

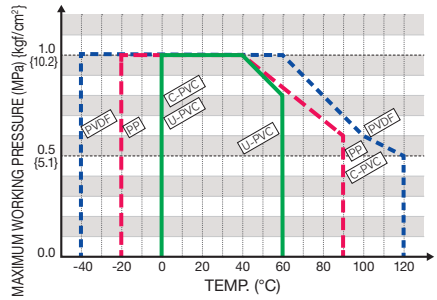

AUTOMATIC PNEUMATIC DOUBLE ACTING / AIR TO CLOSE : 15 mm — 50 mm, AIR TO OPEN : 15 mm — 40 mm

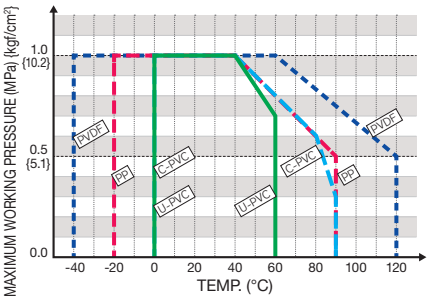

AUTOMATIC PNEUMATIC AIR TO OPEN RUBBER: 50 mm

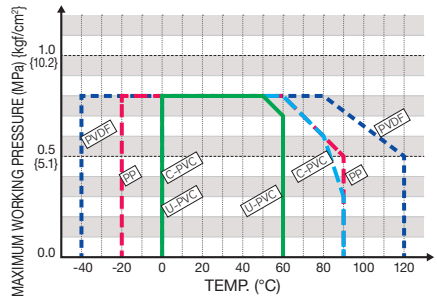

AUTOMATIC PNEUMATIC AIR TO OPEN: 50 mm

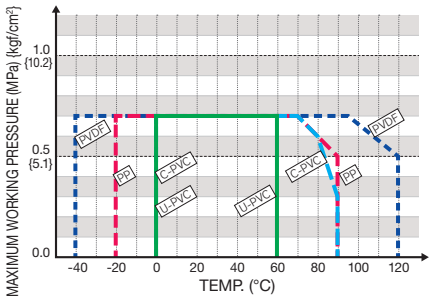

AUTOMATIC PNEUMATIC DOUBLE ACTING: 65 mm

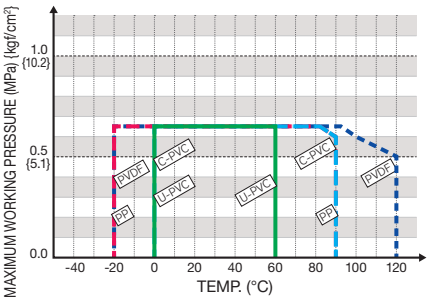

AUTOMATIC PNEUMATIC DOUBLE ACTING: 80 mm・100 mm

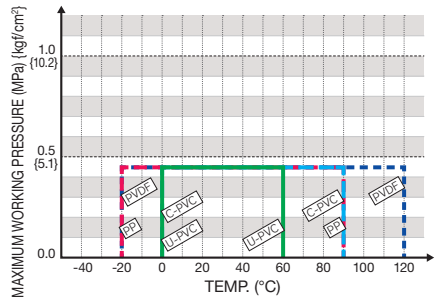

AUTOMATIC PNEUMATIC AIR TO CLOSE / AIR TO OPEN: 65 mm・80 mm・100 mm

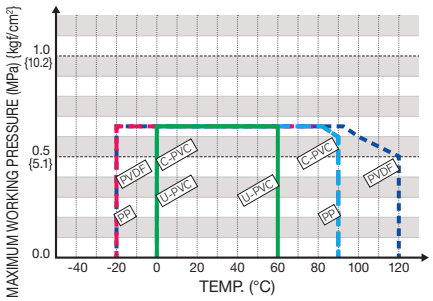

AUTOMATIC ELECTRIC 15 mm — 50 mm

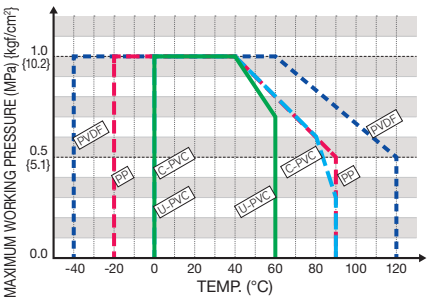

AUTOMATIC ELECTRIC 65 mm

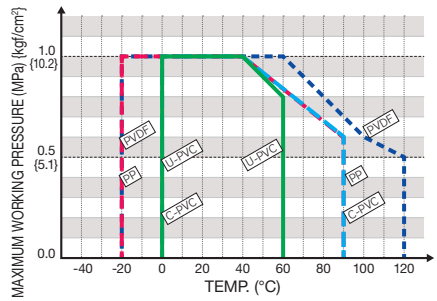

AUTOMATIC PNEUMATIC TYPE AP DOUBLE ACTING, AIR TO CLOSE, AIR TO OPEN (1.0MPa)

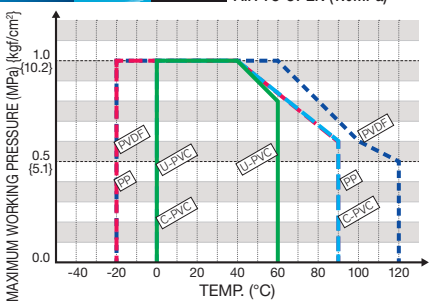

AUTOMATIC ELECTRIC 80 mm

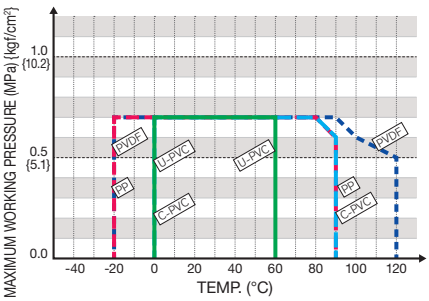

AUTOMATIC ELECTRIC 100 mm

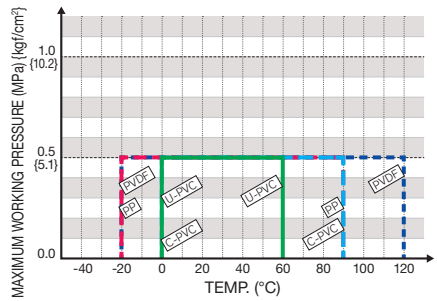

AUTOMATIC PNEUMATIC TYPE AP AIR TO OPEN (0.6MPa)

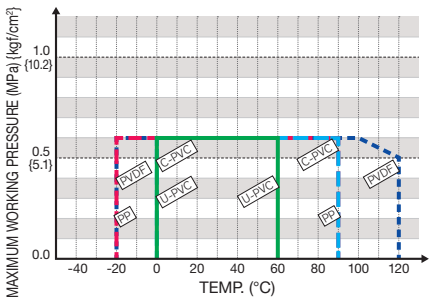

▶ DIAPHRAGM VALVE TYPE 14

Relationship between operating pressure and working pressure

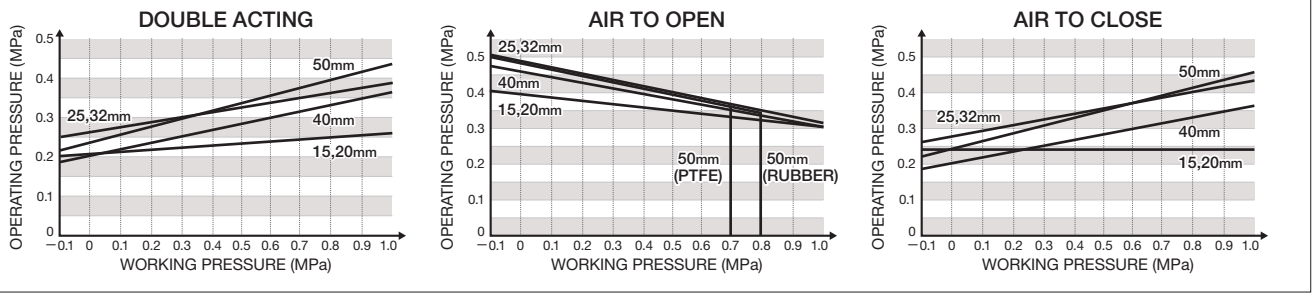

TRUE UNION DIAPHRAGM VALVE TYPE 14

MANUAL 15 mm — 50 mm

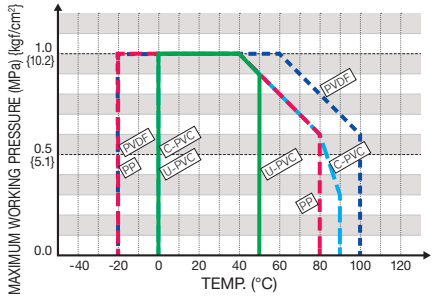

AUTOMATIC PNEUMATIC DOUBLE ACTING / AIR TO CLOSE : 15 mm — 50 mm
AIR TO OPEN : 15 mm — 40 mm

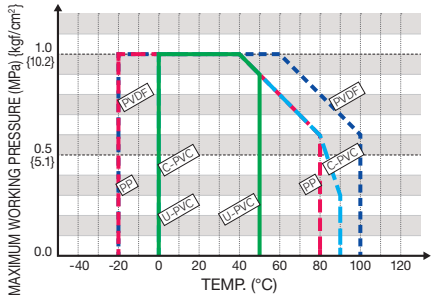

AUTOMATIC PNEUMATIC AIR TO OPEN RUBBER: 50 mm

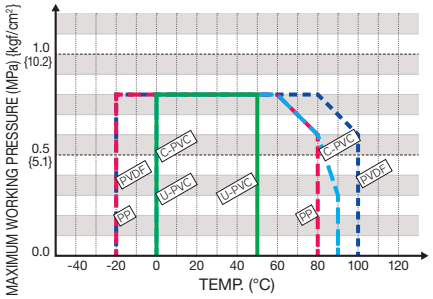

AUTOMATIC PNEUMATIC AIR TO OPEN: 50 mm

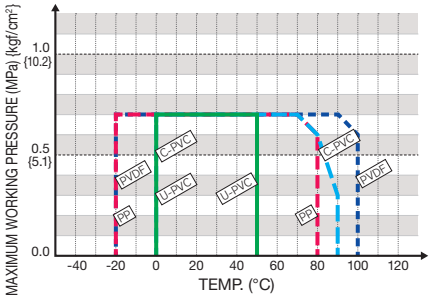

AUTOMATIC ELECTRIC 15 mm — 50 mm

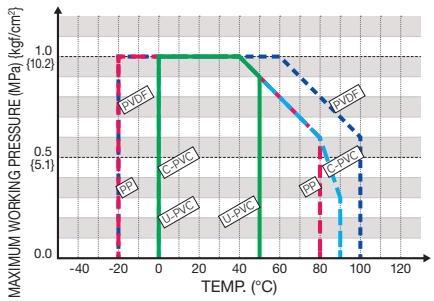

Relationship between operating pressure and working pressure

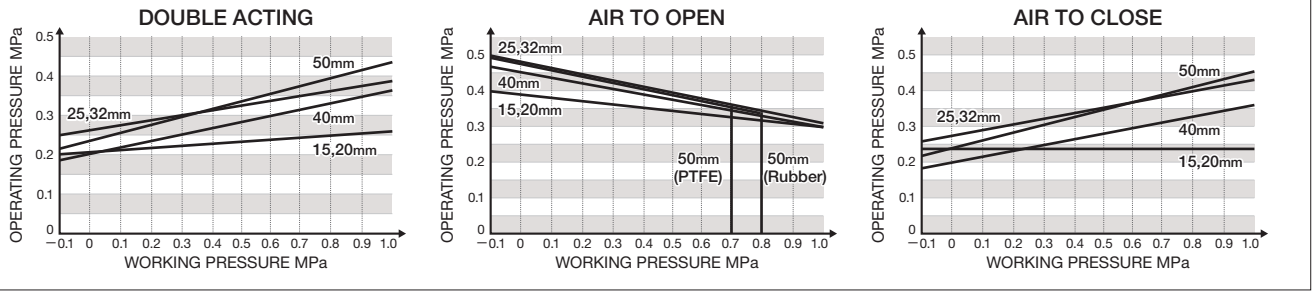

WORKING PRESSURE VS. TEMPERATURE

PVDF — U-PVC — HI-PVC — PDCPD
PP — C-PVC — FCD-S

NOTE Make sure that the temperature and pressure are within the working range during operation. (If the tolerance range is exceeded during use, the valve may be damaged.)

DIAPHRAGM VALVE TYPE 15

MANUAL RUBBER: 125 mm

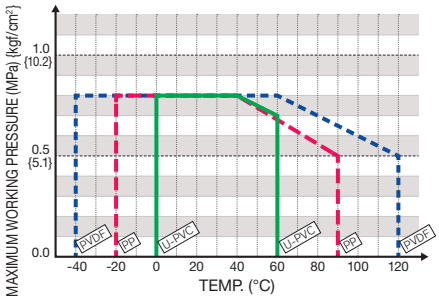

MANUAL RUBBER: 150 mm

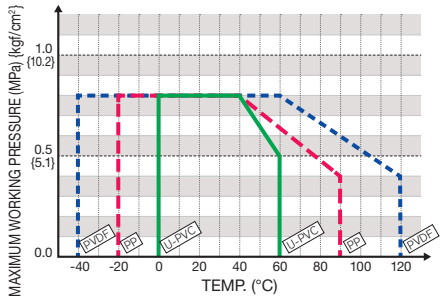

MANUAL PTFE: 125 mm

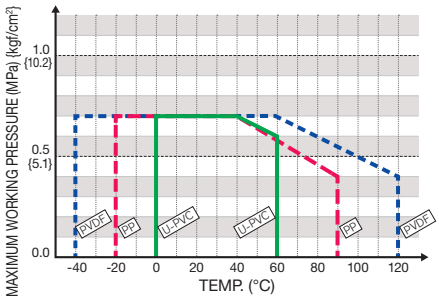

MANUAL PTFE: 150 mm

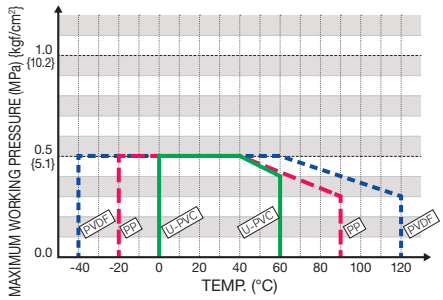

AUTOMATIC PNEUMATIC DOUBLE ACTING: 125 mm

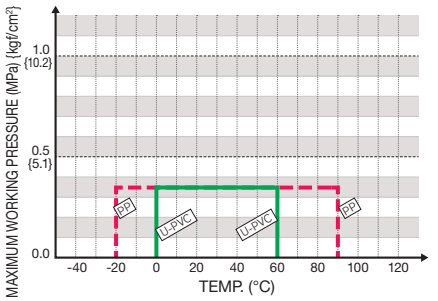

AUTOMATIC PNEUMATIC DOUBLE ACTING PTFE: 125 mm

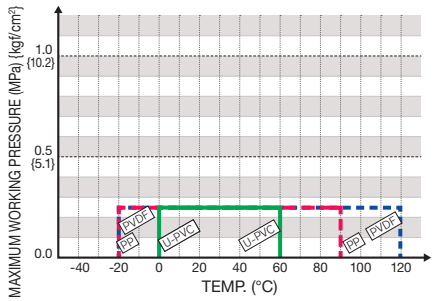

AUTOMATIC PNEUMATIC DOUBLE ACTING: 150 mm

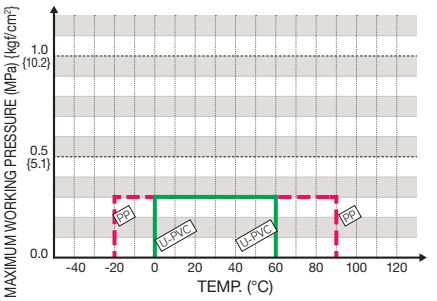

AUTOMATIC PNEUMATIC DOUBLE ACTING PTFE: 150 mm

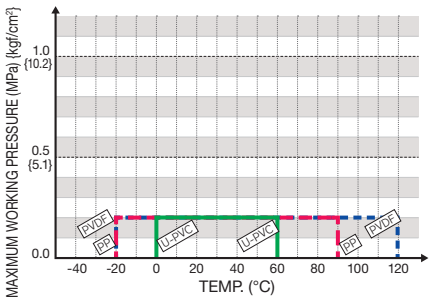

AUTOMATIC PNEUMATIC AIR TO OPEN / AIR TO CLOSE RUBBER: 125 mm·150 mm

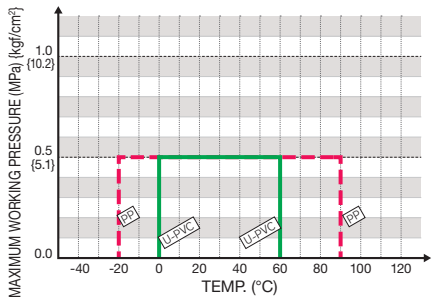

AUTOMATIC PNEUMATIC AIR TO OPEN / AIR TO CLOSE PTFE: 125 mm·150 mm

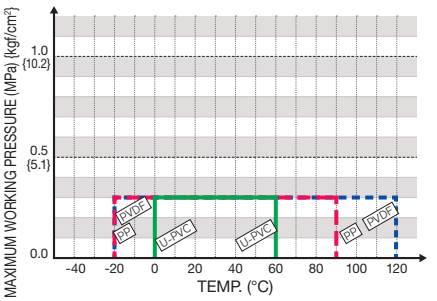

AUTOMATIC ELECTRIC DIAPHRAGM MATERIAL / RUBBER: 125 mm

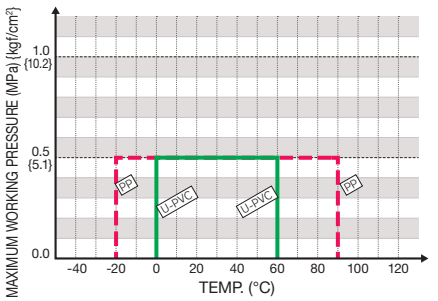

AUTOMATIC ELECTRIC DIAPHRAGM MATERIAL / RUBBER: 150 mm

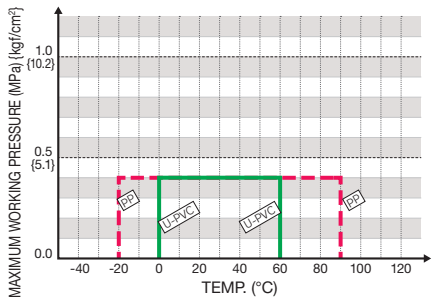

AUTOMATIC ELECTRIC DIAPHRAGM MATERIAL / PTFE: 125 mm·150 mm

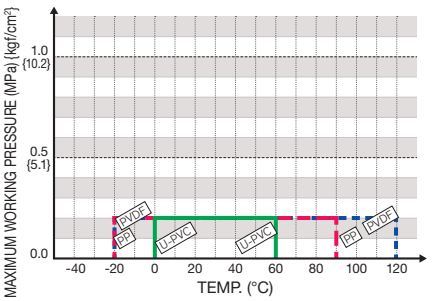

DIAPHRAGM VALVE TYPE 72

MANUAL A TYPE RUBBER: 200 mm

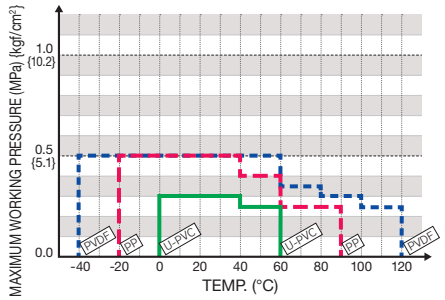

MANUAL B TYPE RUBBER: 200 mm

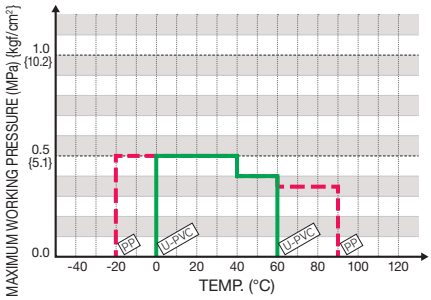

MANUAL A TYPE RUBBER: 250 mm

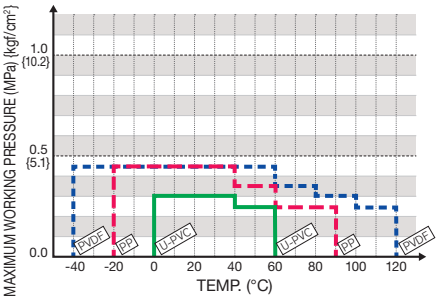

MANUAL B TYPE RUBBER: 250 mm

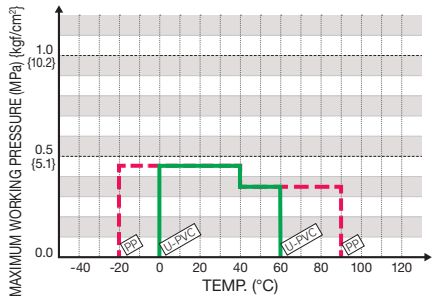

MANUAL A TYPE / PTFE: 200 mm

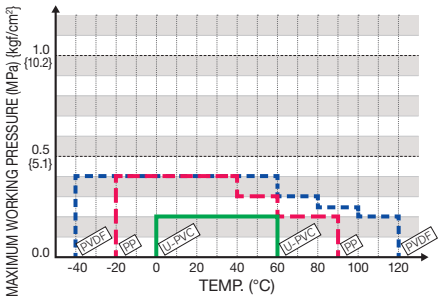

MANUAL B TYPE / PTFE: 200 mm

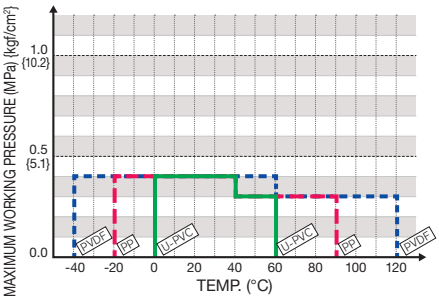

MANUAL A TYPE / PTFE: 250 mm

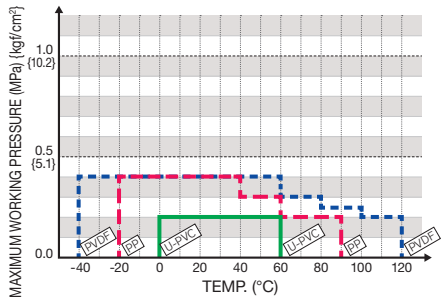

MANUAL B TYPE / PTFE: 250 mm

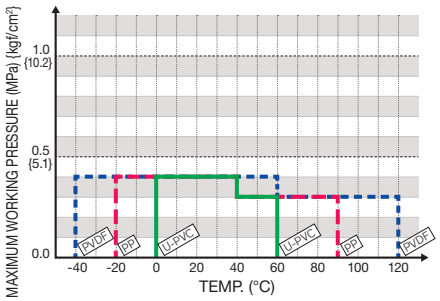

AUTOMATIC PNEUMATIC DOUBLE ACTING RUBBER: 200 mm・250 mm

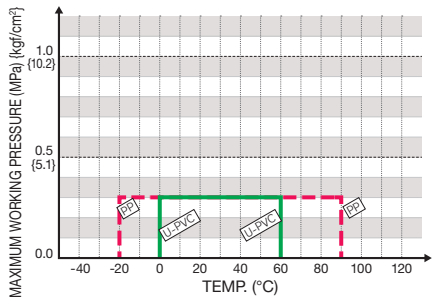

AUTOMATIC PNEUMATIC DOUBLE ACTING PTFE: 200 mm・250 mm

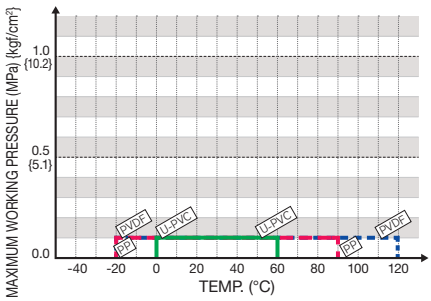

AUTOMATIC ELECTRIC DIAPHRAGM MATERIAL / RUBBER: 200 mm・250 mm

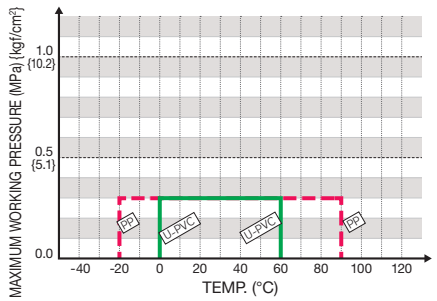

AUTOMATIC ELECTRIC DIAPHRAGM MATERIAL / PTFE: 200 mm・250 mm

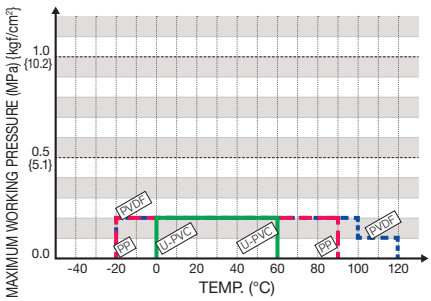

WORKING PRESSURE VS. TEMPERATURE

PVDF — U-PVC — HI-PVC — PDCPD
PP — C-PVC — FCD-S

NOTE Make sure that the temperature and pressure are within the working range during operation. (If the tolerance range is exceeded during use, the valve may be damaged.)

DIAPHRAGM VALVE (TYPE AI)

AUTOMATIC PNEUMATIC DOUBLE ACTING / AIR TO CLOSE : 15 mm — 50 mm
AIR TO OPEN (1.0 MPa TYPE) : 15 mm — 50 mm

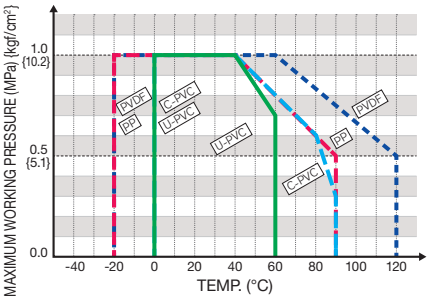

AUTOMATIC PNEUMATIC AIR TO OPEN (0.7 MPa TYPE): 15 mm — 50 mm

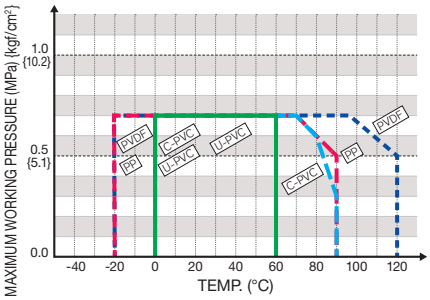

TRUE UNION DIAPHRAGM VALVE (TYPE AI)

AUTOMATIC PNEUMATIC DOUBLE ACTING / AIR TO CLOSE : 15 mm — 50 mm
AIR TO OPEN (1.0 MPa TYPE) : 15 mm — 50 mm

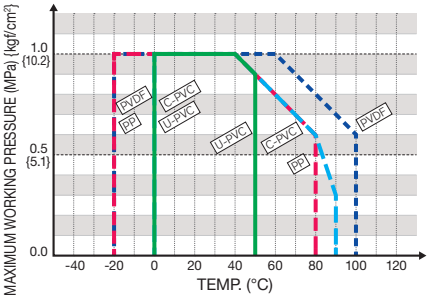

AUTOMATIC PNEUMATIC AIR TO OPEN (0.7 MPa TYPE): 15 mm — 50 mm

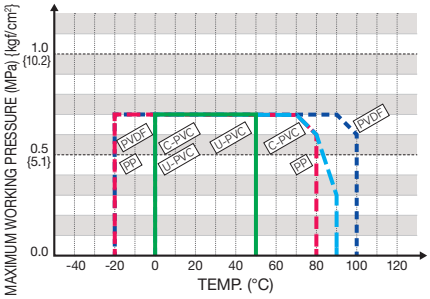

DIAPHRAGM VALVE TYPE 16

AUTOMATIC PNEUMATIC 15 mm — 25 mm

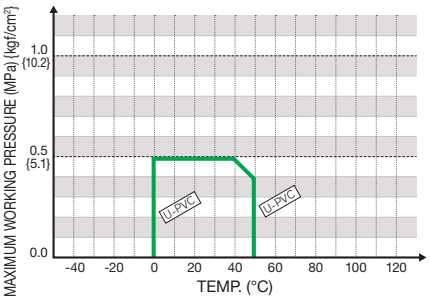

AUTOMATIC PNEUMATIC 40 mm・50 mm

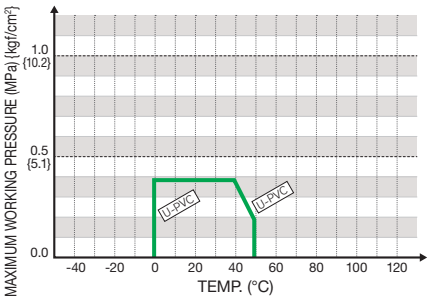

AUTOMATIC PNEUMATIC 15 mm — 25 mm

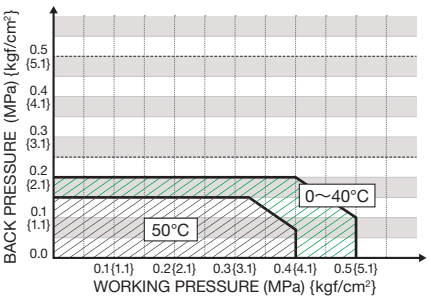

AUTOMATIC PNEUMATIC 40 mm・50 mm

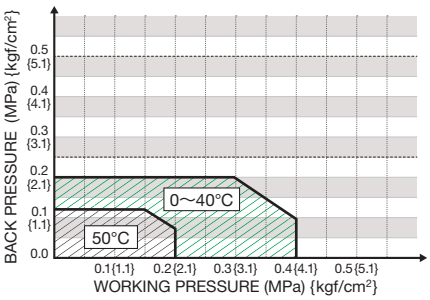

BALL VALVE TYPE 21, 21α

MANUAL AUTOMATIC 15 mm — 50 mm

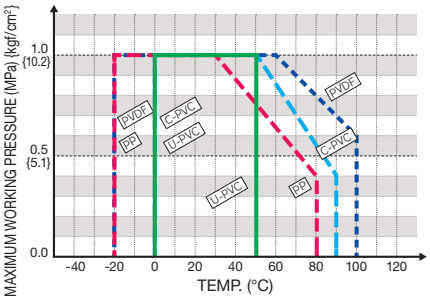

MANUAL AUTOMATIC 65 mm

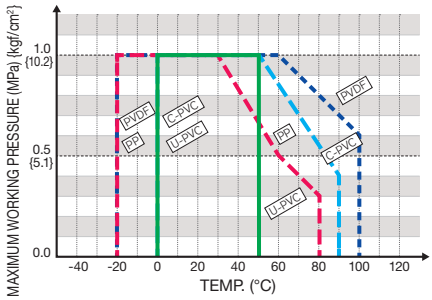

MANUAL AUTOMATIC 80 mm·100 mm

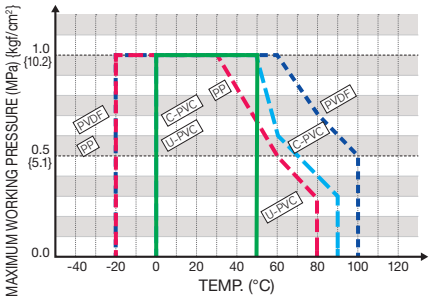

WATER BALL VALVE

MANUAL AUTOMATIC 15 mm — 50 mm

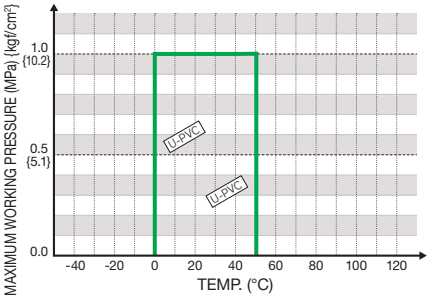

3 WAY BALL VALVE TYPE 23

MANUAL AUTOMATIC 15 mm — 50 mm

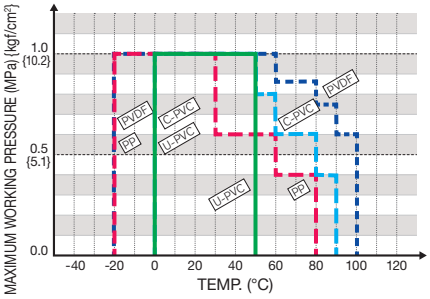

MANUAL AUTOMATIC 65 mm — 100 mm

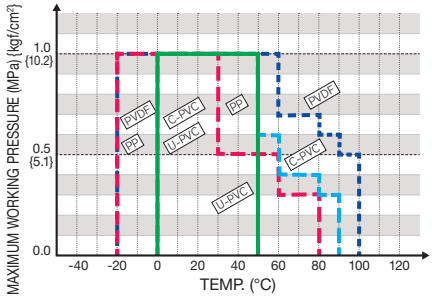

3 WAY BALL VALVE TYPE 23 H

MANUAL 25 mm — 40 mm

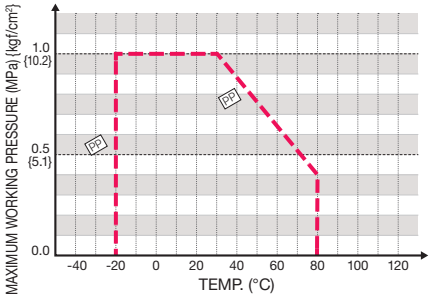

LAB COCK

MANUAL

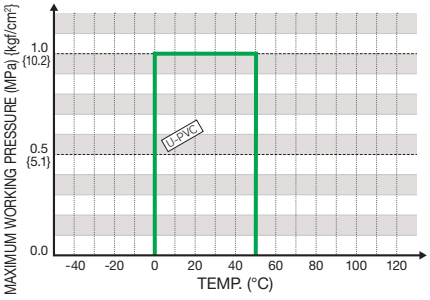

COMPACT BALL VALVE TYPE 27

MANUAL 13 mm — 50 mm

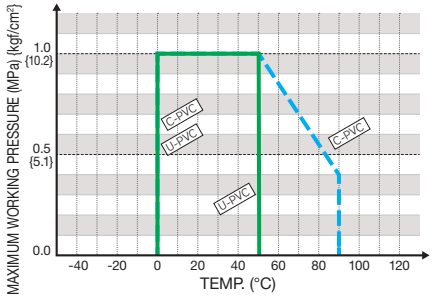

WORKING PRESSURE VS. TEMPERATURE

PVDF — U-PVC — HI-PVC — PDCPD
PP — C-PVC — FCD-S

NOTE Make sure that the temperature and pressure are within the working range during operation. (If the tolerance range is exceeded during use, the valve may be damaged.)

BUTTERFLY VALVE TYPE 57

MANUAL AUTOMATIC 40 mm — 150 mm

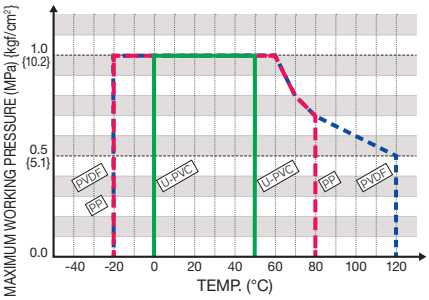

MANUAL AUTOMATIC 200 mm・250 mm

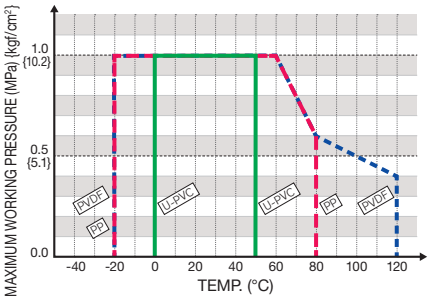

MANUAL AUTOMATIC 300 mm・350 mm

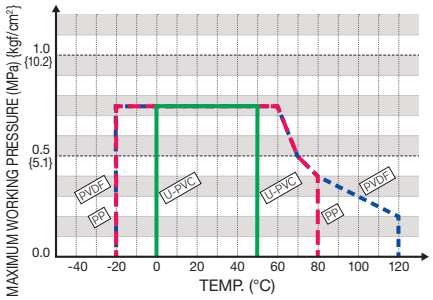

BUTTERFLY VALVE TYPE 56

MANUAL AUTOMATIC 400 mm

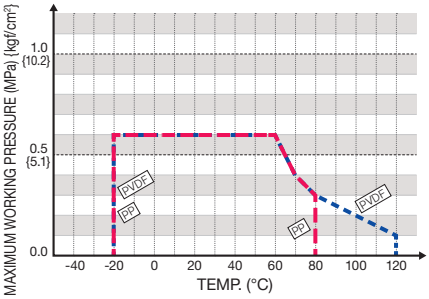

BUTTERFLY VALVE TYPE 75

MANUAL 450 mm

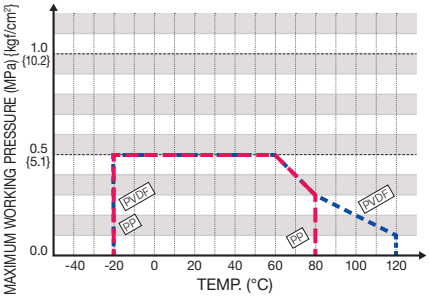

MANUAL 500 mm・600 mm

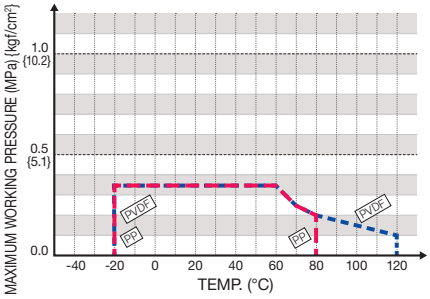

AUTOMATIC PNEUMATIC ELECTRIC 450 mm — 600 mm

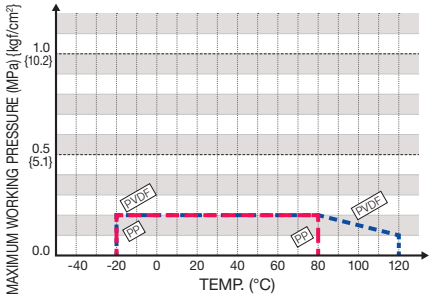

BUTTERFLY VALVE TYPE 56D, 75D

MANUAL 400 mm — 600 mm

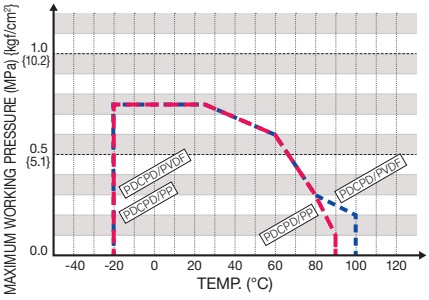

AUTOMATIC PNEUMATIC ELECTRIC 400 mm

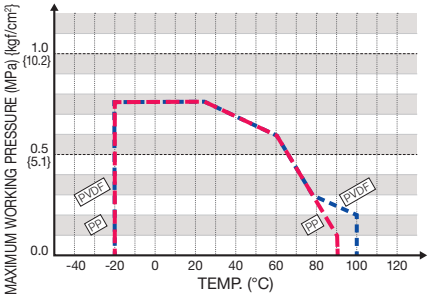

AUTOMATIC PNEUMATIC ELECTRIC 450 mm — 600 mm

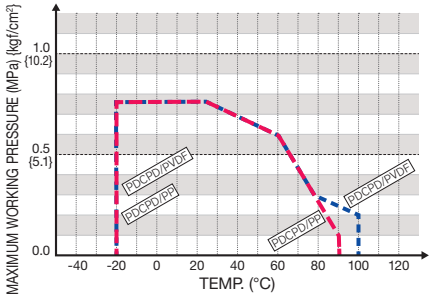

BUTTERFLY VALVE TYPE 55

MANUAL AUTOMATIC 50 mm — 250 mm

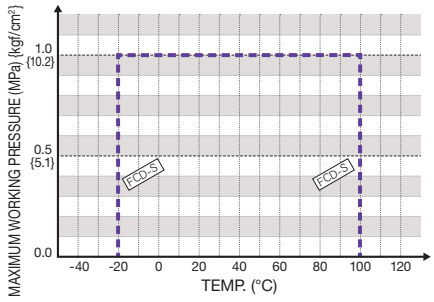

BUTTERFLY VALVE TYPE 55IS

MANUAL 50 mm — 150 mm

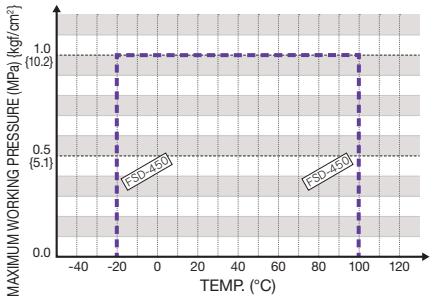

BUTTERFLY VALVE TYPE 57L (PDCPD WAFER)

MANUAL 80 mm — 250 mm

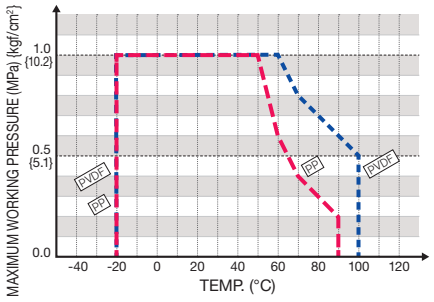

* When the seat material is FKM, FKM-C or FKM-F, the working temperature must be -5°C or more.

BUTTERFLY VALVE TYPE 57TL (U-PVC WAFER)

MANUAL 80 mm — 250 mm

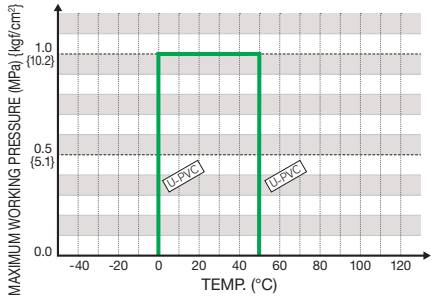

PDCPD LARGE SIZE BUTTERFLY VALVE

MANUAL AUTOMATIC 700 mm — 1,000 mm

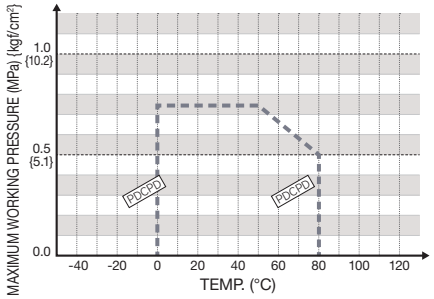

MANUAL AUTOMATIC 1,100 mm・1,200 mm

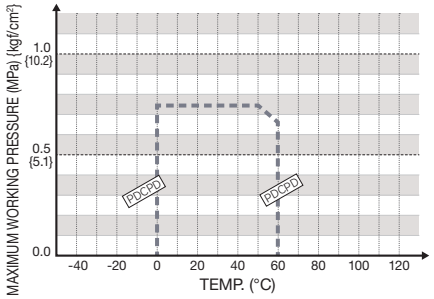

ROTARY DAMPER

MANUAL AUTOMATIC 40 mm — 200 mm

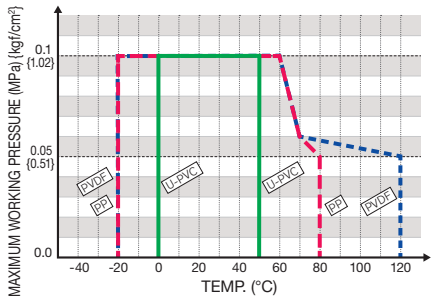

MANUAL AUTOMATIC 250 mm — 600 mm

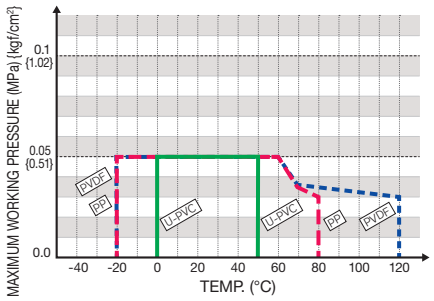

BUTTERFLY VALVE TYPE 58

MANUAL 700mm

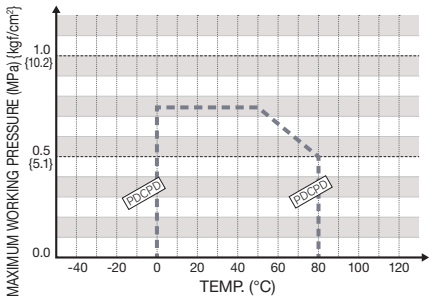

CONTROL VALVE

AUTOMATIC PNEUMATIC ELECTRIC U-PVC: 15 mm・25 mm・50 mm

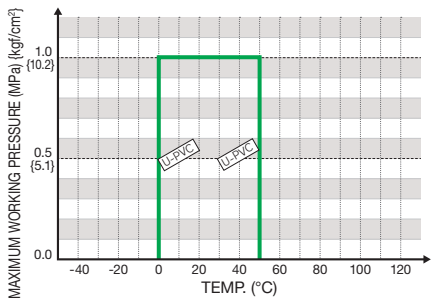

AUTOMATIC PNEUMATIC ELECTRIC U-PVC: 80 mm・100 mm

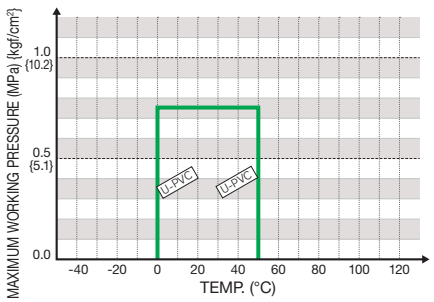

AUTOMATIC PNEUMATIC ELECTRIC PVDF: 15 mm・25 mm

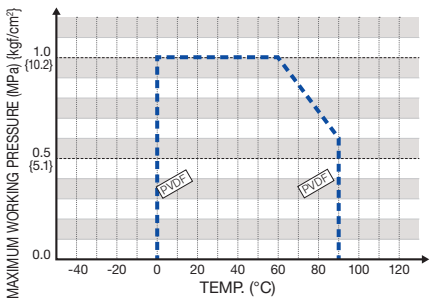

WORKING PRESSURE VS. TEMPERATURE

PVDF — U-PVC — HI-PVC — PDCPD
PP — C-PVC — FCD-S

NOTE Make sure that the temperature and pressure are within the working range during operation. (If the tolerance range is exceeded during use, the valve may be damaged.)

SWING CHECK VALVE (O-RING TYPE)

MANUAL 15 mm — 80 mm

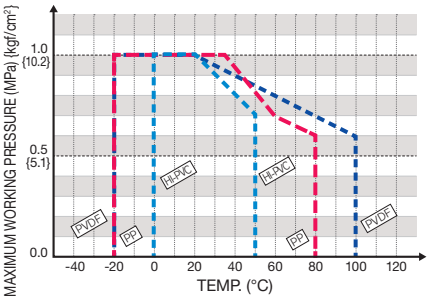

MANUAL 100 mm — 150 mm

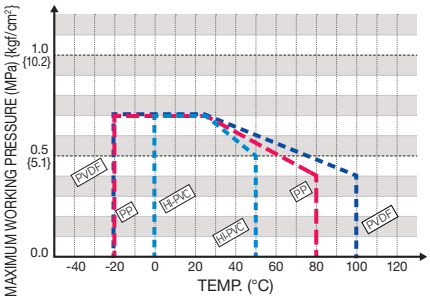

MANUAL 200 mm

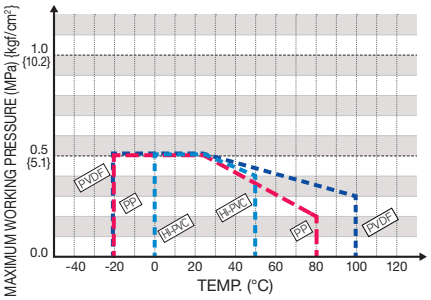

WAFER CHECK VALVE

MANUAL 80 mm — 200 mm

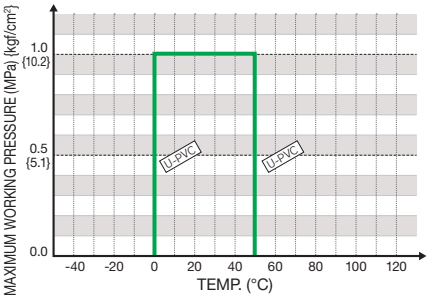

MANUAL 250 mm・300 mm

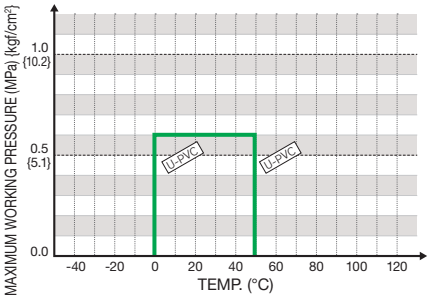

BALL CHECK VALVE

MANUAL 15 mm — 50 mm

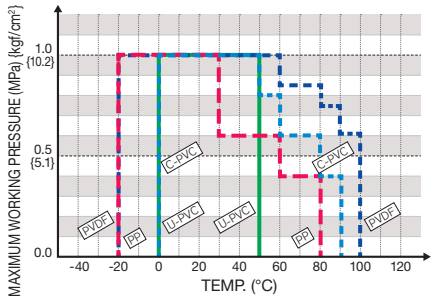

MANUAL 80 mm·100 mm

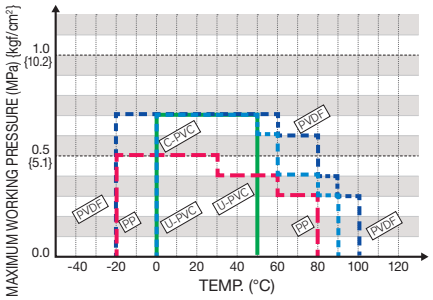

BALL FOOT VALVE

MANUAL 15 mm — 50 mm

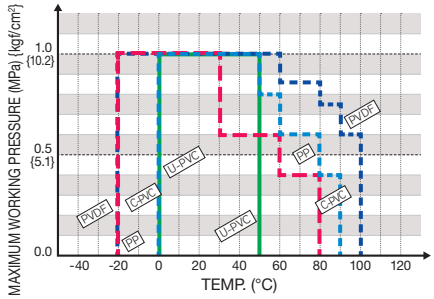

MANUAL 80 mm·100 mm

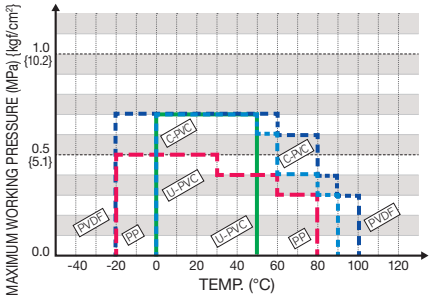

STOP VALVE (GLOBE VALVE)

MANUAL 15 mm — 40 mm

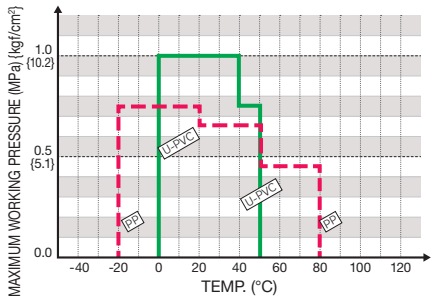

MANUAL 50 mm

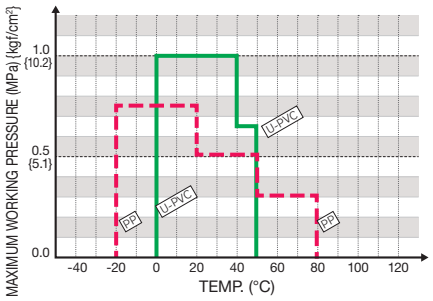

MANUAL 65 mm·80 mm

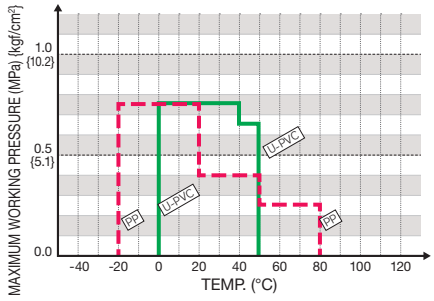

MANUAL 100 mm

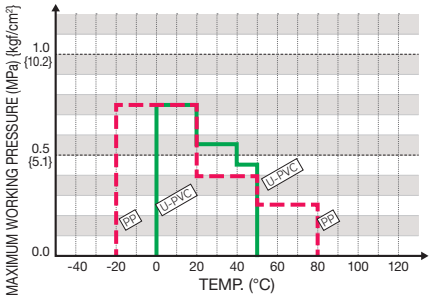

NEEDLE VALVE

MANUAL 15 mm — 25 mm

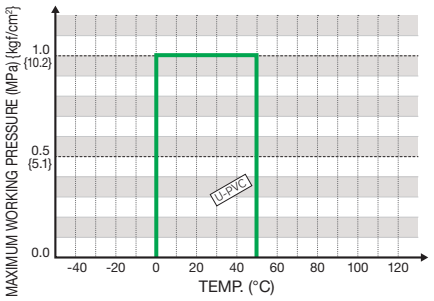

WORKING PRESSURE VS. TEMPERATURE

PVDF — U-PVC — HI-PVC — PDCPD
PP — C-PVC — FCD-S

NOTE Make sure that the temperature and pressure are within the working range during operation. (If the tolerance range is exceeded during use, the valve may be damaged.)

SELF CONTROL VALVE PRESSURE REDUCING TYPE

MANUAL 15 mm — 50 mm

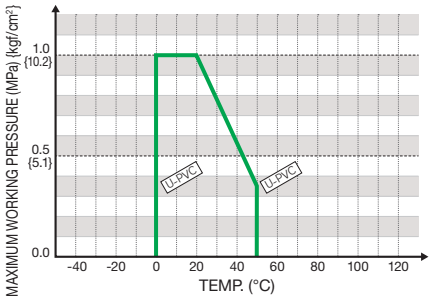

SELF CONTROL VALVE PRESSURE RELIEF TYPE / PRESSURE RETAINING TYPE

MANUAL 15 mm — 50 mm

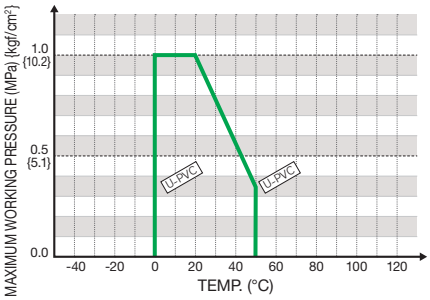

GAUGE VALVE

MANUAL 20 mm — 25 mm

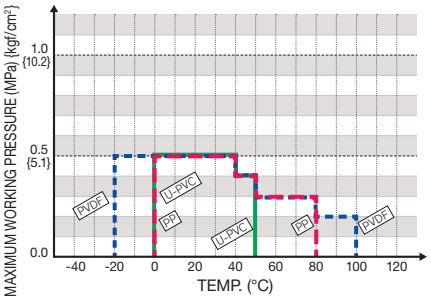

SEDIMENT STRAINER (TYPE Y)

MANUAL 15 mm — 50 mm

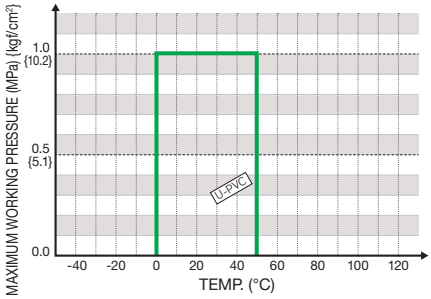

MANUAL 65 mm — 100 mm

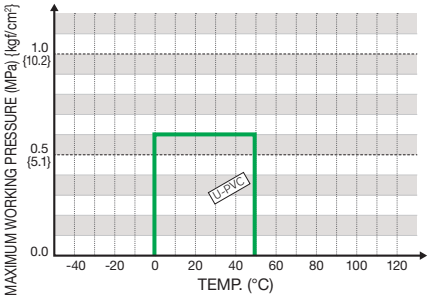

ALFALFA VALVE® TYPE 82

MANUAL 50 mm — 100 mm

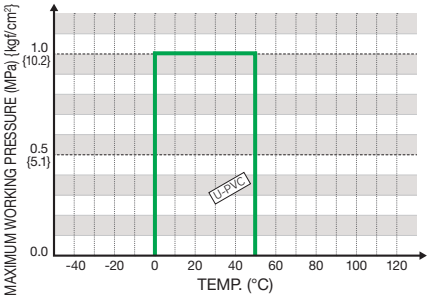

GATE VALVE (TYPE P / TYPE S)

MANUAL 40 mm — 200 mm

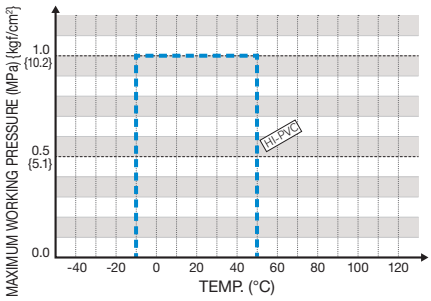

MANUAL 250 mm

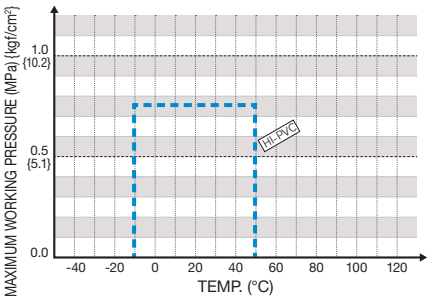

MANUAL 300 mm・350 mm

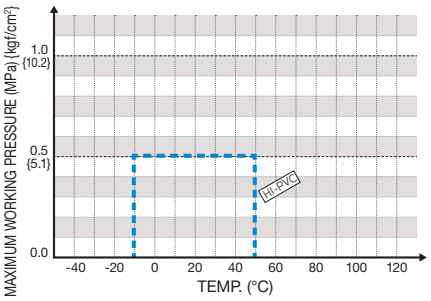

AUTOMATIC WATER FEEDING VALVE

MANUAL 50 mm・80 mm (TYPE B)

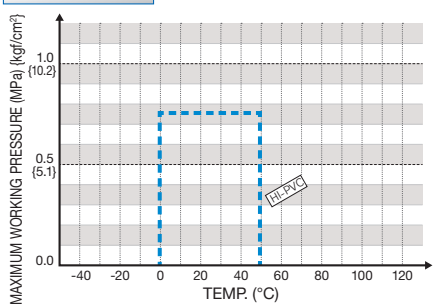

MANUAL 80 mm (TYPE A)

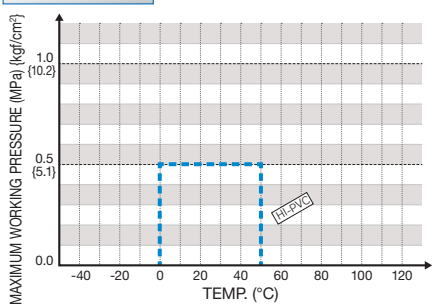

ROTARY ANGLE VALVE

MANUAL 50 mm・80 mm

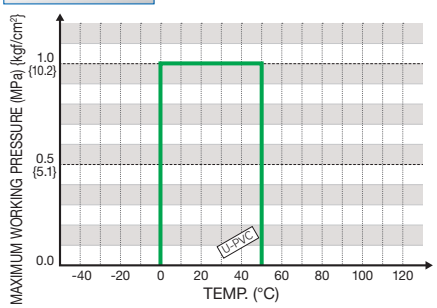

Cv VALUE FOR EACH OPENING DEGREE

DIAPHRAGM VALVE TYPE 14, TYPE 15, TYPE 72

15 mm — 50 mm

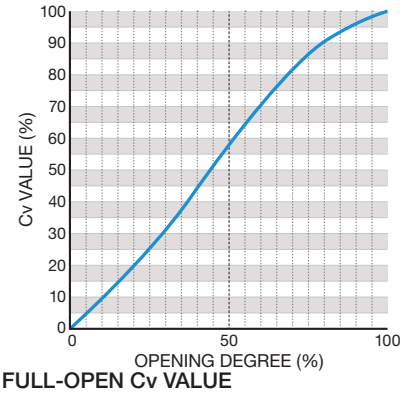

65 mm — 100 mm

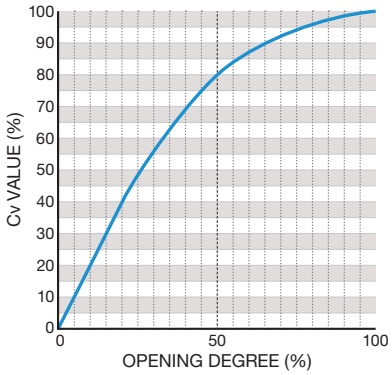

125 mm — 250 mm

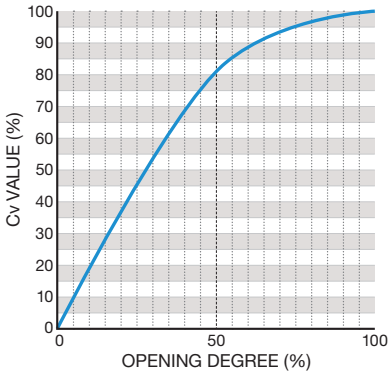

FULL-OPEN Cv VALUE

mm	15	20	25	32	40	50	65	80	100	125	150	200	250
inch	1/2	3/4	1	1 1/4	1 1/2	2	2 1/2	3	4	5	6	8	10
FULL-OPEN Cv VALUE	4.8	5.3	8.5	11	26	43	85	115	185	300	400	700	1000

DIAPHRAGM VALVE (TYPE AI)

15 mm — 50 mm

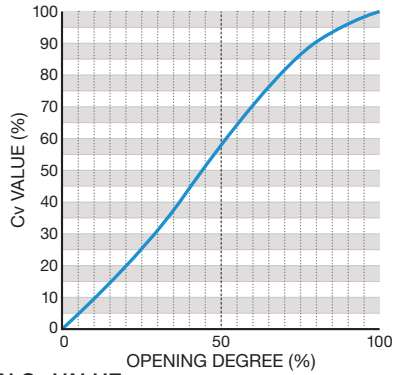

FULL-OPEN Cv VALUE

mm	15	20	25	32	40	50
inch	1/2	3/4	1	1 1/4	1 1/2	2
FULL-OPEN Cv VALUE	4.8	7.2	10	11	26	48

DIAPHRAGM VALVE TYPE 16

15 mm — 50 mm

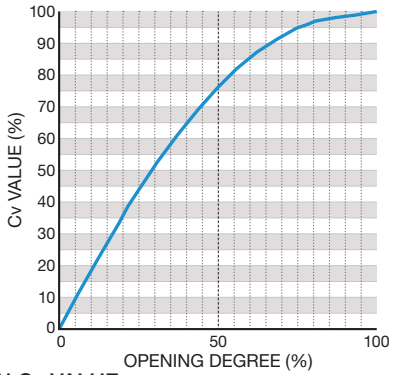

FULL-OPEN Cv VALUE

mm	15	20	25	40	50
inch	1/2	3/4	1	1 1/2	2
FULL-OPEN Cv VALUE	4.8	8.0	9.5	26	44

BALL VALVE TYPE 21, TYPE 21α / WATER BALL VALVE

TYPE 21, TYPE 21α: 15 mm — 100 mm
WATER BALL VALVE: 15 mm — 50 mm

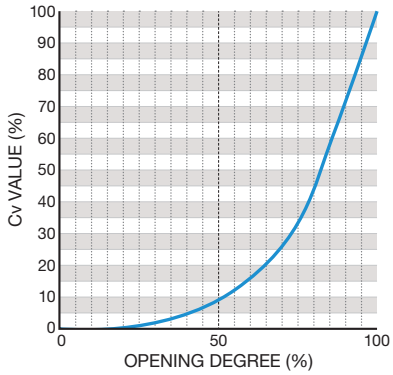

FULL-OPEN Cv VALUE

mm	15	20	25	32	40	50	65	80	100
inch	1/2	3/4	1	1 1/4	1 1/2	2	2 1/2	3	4
FULL-OPEN Cv VALUE	14	29	47	72	155	190	365	410	680

3 WAY BALL VALVE TYPE 23

DOUBLE L PORT (STANDARD)

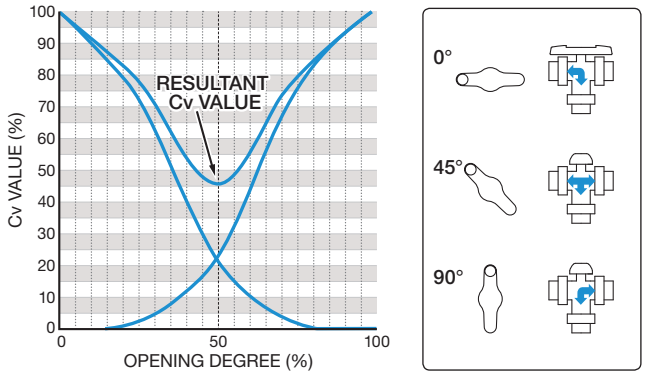

L PORT (OPTION)

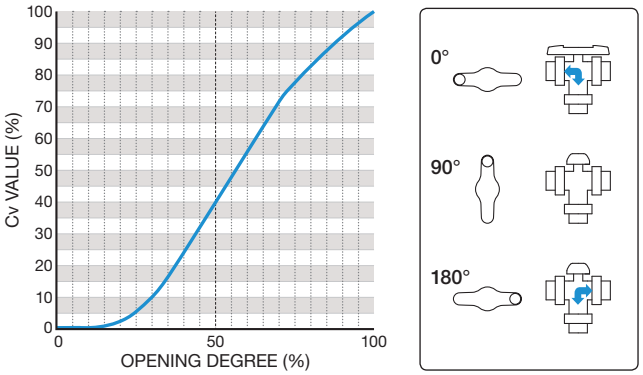

CROSS PORT (OPTION)
DIRECTION A to B, DIRECTION A to C, OPENING DEGREE (%) DIRECTION A to C

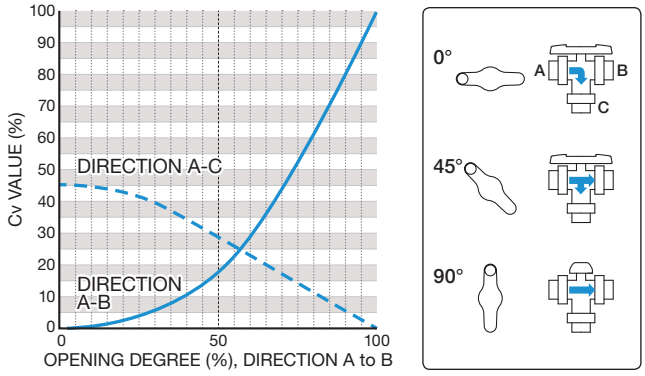

CROSS PORT (OPTION)
DIRECTION C to A

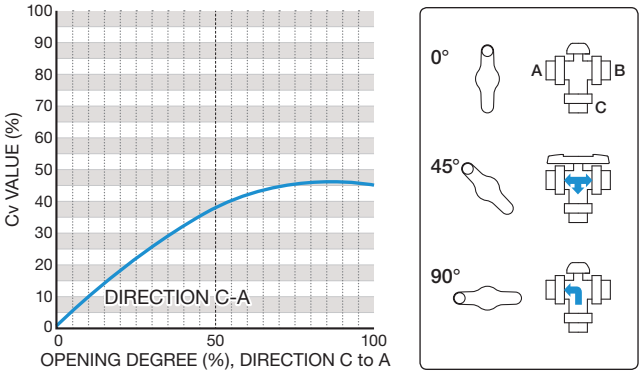

FULL-OPEN Cv VALUE

mm		15	20	25	32	40	50	65	80	100
inch		1/2	3/4	1	1 1/4	1 1/2	2	2 1/2	3	4
FULL-OPEN Cv VALUE	L PORT	7.4	10	23	33	43	59	111	130	260
	DOUBLE L PORT	6.3	8.5	20	27	36	45	84	99	200
	CROSS PORT	7.8	13	23	49	65	98	—	—	—

Cv VALUE FOR EACH OPENING DEGREE

LAB COCK

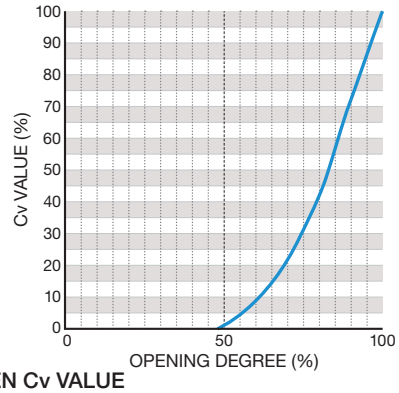

FULL-OPEN Cv VALUE

mm	—	15	—
inch	1/4	1/2	3/8
FULL-OPEN Cv VALUE	1.6		

COMPACT BALL VALVE TYPE 27

13 mm — 50 mm

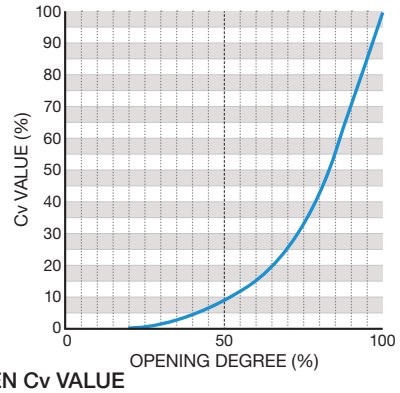

FULL-OPEN Cv VALUE

mm	13	15	20	25	32
inch	3/8	1/2	3/4	1	1 1/4
FULL-OPEN Cv VALUE	7.7	14	29	47	72

mm	40	50
inch	1 1/2	2
FULL-OPEN Cv VALUE	155	190

BUTTERFLY VALVE TYPE 57, TYPE 56, TYPE 75 / LUG BUTTERFLY VALVE TYPE 57L / BUTTERFLY VALVE TYPE 55, TYPE 55IS

BUTTERFLY VALVE TYPE 57: **40 mm — 350 mm**
LUG BUTTERFLY VALVE TYPE 57L: **80 mm — 150 mm**

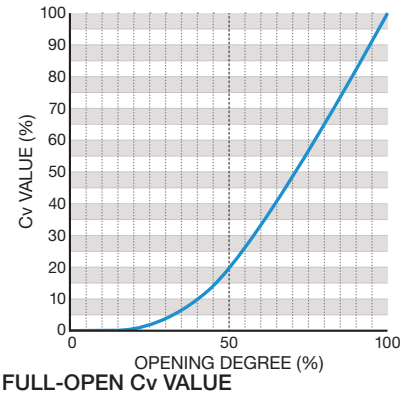

BUTTERFLY VALVE TYPE 56: **400 mm**
BUTTERFLY VALVE TYPE 75: **450 mm — 600 mm**

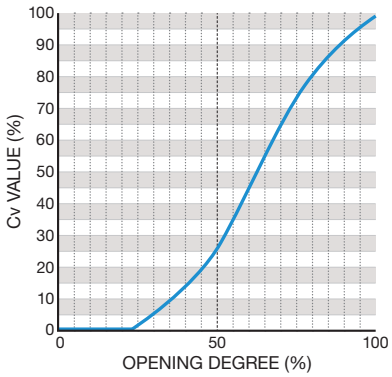

BUTTERFLY VALVE TYPE 55, TYPE 55IS: **50 mm — 250 mm**

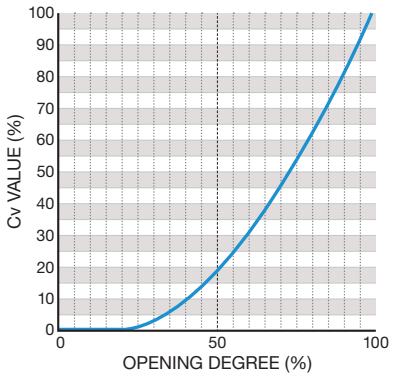

FULL-OPEN Cv VALUE

	mm	40	50	65	80	100	125	150	200	250	300	350	400	450	500	600
	inch	1 1/2	2	2 1/2	3	4	5	6	8	10	12	14	16	18	20	24
FULL-OPEN Cv VALUE	BUTTERFLY VALVE TYPE 57	71	120	250	300	470	830	1,100	2,500	3,860	5,700	6,440	—	—	—	—
	BUTTERFLY VALVE TYPE 56	—	—	—	—	—	—	—	—	—	—	—	8,340	—	—	—
	BUTTERFLY VALVE TYPE 75	—	—	—	—	—	—	—	—	—	—	—	—	10,890	14,060	18,500
	LUG BUTTERFLY VALVE TYPE 57L	—	—	—	300	470	830	1,100	2,500	—	—	—	—	—	—	—
	BUTTERFLY VALVE TYPE 55, TYPE 55IS	—	100	—	285	600	940	1,500	2,500	4,200	—	—	—	—	—	—

PDCPD LARGE SIZE BUTTERFLY VALVE

700 mm — 1,200 mm

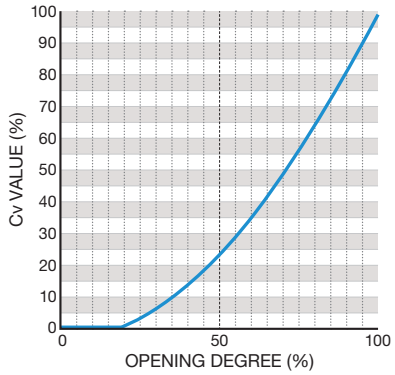

FULL-OPEN Cv VALUE

mm	700	800	900	1,000	1,100	1,200
inch	28	32	36	40	44	48
FULL-OPEN Cv VALUE	32,000	43,000	55,000	70,000	86,000	100,000

ROTARY DAMPER

40 mm — 350 mm

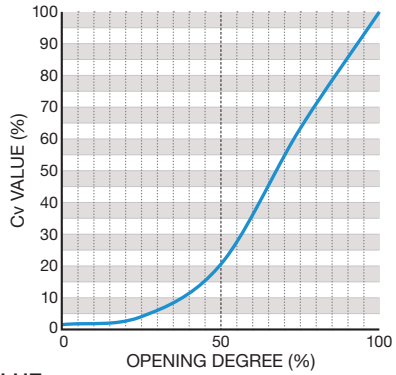

400 mm — 600 mm

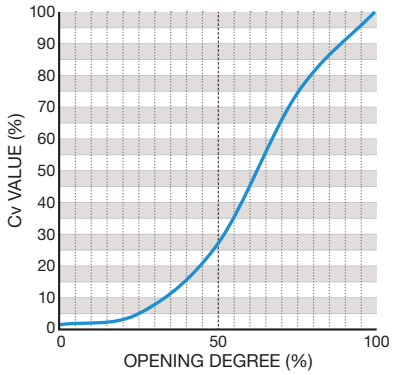

FULL-OPEN Cv VALUE

mm	40	50	65	80	100	125	150	200	250	300	350	400
inch	1 1/2	2	2 1/2	3	4	5	6	8	10	12	14	16
FULL-OPEN Cv VALUE	71	120	250	300	470	830	1,100	2,500	3,860	5,700	6,440	8,430

Cv VALUE FOR EACH OPENING DEGREE

SWING CHECK VALVE, WAFER CHECK VALVE, BALL CHECK VALVE, BALL FOOT VALVE

FULL-OPEN Cv VALUE

	mm	15	20	25	30 (32)	40	50	65	80	100	125	150	200	250	300
	inch	1/2	3/4	1	1 1/4	1 1/2	2	2 1/2	3	4	5	6	8	10	12
Full open Cv VALUE	SWING CHECK VALVE	14	14	24	—	81	140	250	280	510	750	1,100	1,900	—	—
	WAFER CHECK VALVE	—	—	—	—	—	—	—	137	200	372	663	1,225	2,061	3,017
	BALL CHECK VALVE	6.5	17	25	—	86	130	—	280	500	—	—	—	—	—
	BALL FOOT VALVE	6.5	17	25	—	86	130	—	280	500	—	—	—	—	—

STOP VALVE (GLOBE VALVE)

STOP VALVE (GLOBE VALVE): **15 mm — 100 mm**

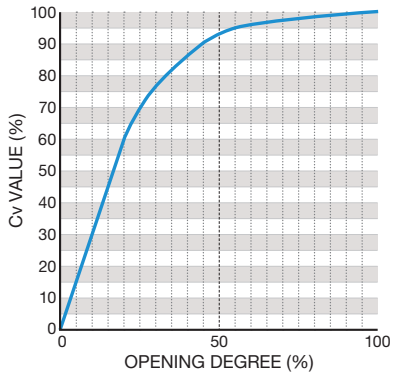

FULL-OPEN Cv VALUE

	mm	15	20	25	30 (32)	40	50	65	80	100
	inch	1/2	3/4	1	1 1/4	1 1/2	2	2 1/2	3	4
Full open Cv VALUE	STOP VALVE (GLOBE VALVE)	4.1	6.4	9.7	18	22	29	57	78	115

SEDIMENT STRAINER (TYPE Y)

FULL-OPEN Cv VALUE

	mm	15	20	25	30 (32)	40	50	65	80	100
	inch	1/2	3/4	1	1 1/4	1 1/2	2	2 1/2	3	4
Full open Cv VALUE	SEDIMENT STRAINER (TYPE Y)	5.2	7.5	14	26	34	50	93	110	165

NEEDLE VALVE

15 mm·20 mm·25 mm

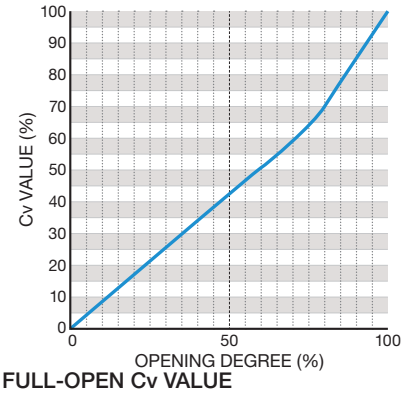

15 mm·20 mm (PORT SIZE 15 mm)

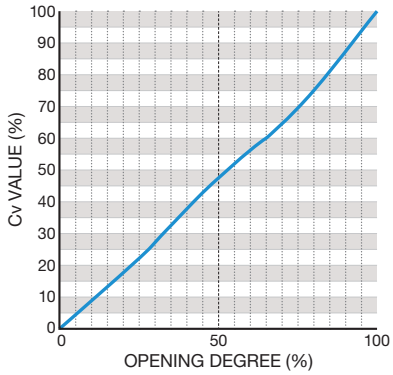

25 mm (PORT SIZE 15 mm)

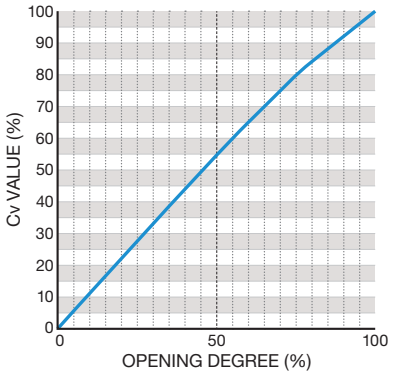

FULL-OPEN Cv VALUE

mm	15, 20		25	
inch	1/2, 3/4		1	
PORT SIZE (mm)	6	15	6	15
FULL-OPEN Cv VALUE	0.7	4.5	0.7	6.0

GATE VALVE

TYPE P: 40 mm — 350 mm

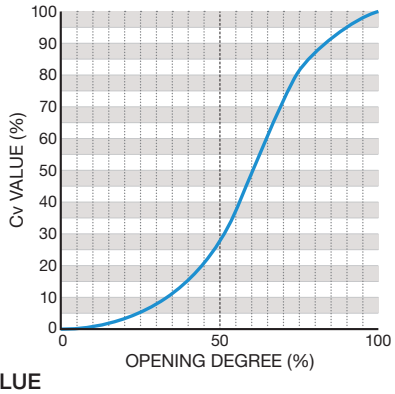

TYPE S: 40 mm — 200 mm

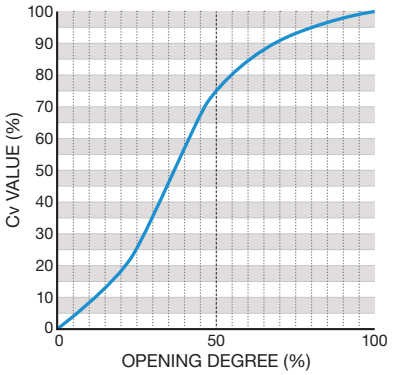

FULL-OPEN Cv VALUE

	mm	40	50	65	80	100	125	150	200	250	300	350
	inch	1 1/2	2	2 1/2	3	4	5	6	8	10	12	14
Full open Cv VALUE	GATE VALVE (TYPE P)	130	180	415	470	690	1,000	1,400	2,900	3,700	5,200	7,000
	GATE VALVE (TYPE S)	130	180	415	470	690	1,000	1,400	2,900	—	—	—

PIPE BOLT DIMENSIONS (REFERENCE: RECOMMENDED DATA)

DIAPHRAGM VALVE

(FOR JIS10K) UNIT: mm

mm	inch	PIPE BOLT DIMENSIONS			VALVE TYPE
		D	S	L	
15	1/2	M12	30	55	TYPE 14
20	3/4	M12	30	55	
25	1	M16	38	60	
32	1 1/4	M16	38	65	
40	1 1/2	M16	38	65	
50	2	M16	38	70	
65	2 1/2	M16	38	75	
80	3	M16	38	75	
100	4	M16	38	75	
125	5	M20	52	80	TYPE 15
150	6	M20	52	85	
200	8	M20	52	90	TYPE 72
250	10	M22	56	100	

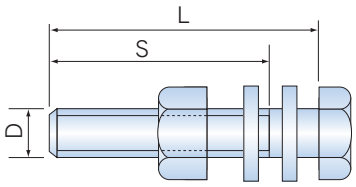

NOTES The diaphragm may become loose due to temperature changes during long storage, operation stop or while in use. Check the conditions and then retighten the bolts and nuts between the bonnet and the body to the "bonnet tightening torque". (For bonnet tightening torque, see the table below.)

ASAHI AV DIAPHRAGM VALVE BONNET TIGHTENING TORQUE

UNIT: N·m {kgf·cm}

	TYPE 14									TYPE 15		TYPE 72	
mm ▶	15	20	25	32	40	50	65	80	100	125	150	200	250
inch ▶	1/2	3/4	1	1 1/4	1 1/2	2	2 1/2	3	4	5	6	8	10
RUBBER DIAPHRAGM	3.0 {31}	3.0 {31}	5.0 {51}	5.0 {51}	12.0 {122}	15.0 {153}	13.0 {133}	18.0 {184}	35.0 {357}	45.0 {459}	45.0 {459}	30.0 {306}	30.0 {306}
PTFE DIAPHRAGM	5.0 {51}	5.0 {51}	8.0 {82}	8.0 {82}	15.0 {153}	20.0 {204}	15.0 {153}	20.0 {204}	40.0 {408}	45.0 {459}	45.0 {459}	30.0 {306}	30.0 {306}

BALL VALVE | CHECK VALVE | OTHER VALVES

BALL VALVE **3 WAY BALL VALVE TYPE 23, TYPE 23H** **SWING CHECK VALVE** **WAFER CHECK VALVE**
BALL CHECK VALVE **BALL FOOT VALVE** **STOP VALVE (GLOBE VALVE), CONSTANT FLOW VALVE**
GAUGE VALVE **SEDIMENT STRAINER (TYPE Y)**

FLANGED (JIS10K) UNIT: mm

	SIZE	13	15	20	25	32	40	50	65	75	100	125	150	200	250	300	350
	SCREW SIZE	M12	M12	M12	M16	M16	M16	M16	M16	M16	M16	M20	M20	M20	M22	M22	M22
	NO. OF FLANGE HOLES	4	4	4	4	4	4	4	4	8	8	8	8	12	12	16	16
	FLANGE THICKNESS	14	14	15	15	16	16	20	22	22	22	24	26	28	30	30	34
NOMINAL LENGTH	TS FLANGE	55	55	60	60	65	65	70	75	75	75	85	90	100	100	100	110
	BALL VALVE TYPE 21, 21α	—	55	55	60	65	65	65	70	70	70	—	—	—	—	—	—
	3 WAY BALL VALVE TYPE 23, 23H	—	55	55	60	65	65	65	70	70	70	—	—	—	—	—	—
	SWING CHECK VALVE	—	55	55	60	65	65	70	75	75	75	85	85	100	—	—	—
	GAUGE VALVE	—	—	55	60	—	—	—	—	—	—	—	—	—	—	—	—
	BALL CHECK VALVE	—	60	60	65	—	65	75	—	80	80	—	—	—	—	—	—
	BALL FOOT VALVE	—	60	60	65	—	65	75	—	80	80	—	—	—	—	—	—
	STOP VALVE (GLOBE VALVE)	—	55	55	60	65	65	65	70	70	70	—	—	—	—	—	—
	CONSTANT FLOW VALVE	—	55	55	60	—	—	70	—	75	75	—	—	—	—	—	—
	SEDIMENT STRAINER (TYPE Y)	—	55	60	65	65	65	70	75	75	75	—	—	—	—	—	—
	WAFER CHECK VALVE	—	—	—	—	—	—	—	—	150	160	175	185	210	230	230	—

NOTES (1) The above values indicate the bolt dimensions when an AV TS flange and AV packing are used.
(2) The numbers in a circle indicate the number of bolts required to connect one side of flange. When there is no indication, refer to the number of flange holes.

BUTTERFLY VALVE TYPE 57, TYPE 56, TYPE 75 / PDCPD LARGE SIZE, ROTARY DAMPER

■ JIS10K

UNIT: mm

mm	inch	BOLT A			BOLT B				QTY		
		d	L	S	d1	L1	S1	S2	BOLT A	BOLT B	NUT / WASHER
40	1 1/2	M16	115	40	–	–	–	–	4	–	8
50	2		125								
65	2 1/2		135	45					8		16
80	3		135								
100	4		145								
125	5	M20	165	50							
150	6		175	55					12		24
200	8		195								
250	10	M22	225	60					16		32
300	12		245								
350	14		255	65							
400	16	M24	290	60	M24	120	FULL THREAD		14	4	32
450	18		310	65		120			16	8	40
500	20		320	75		120					
600	24	M30	350	70	M30	140			20		48
700	28		370			130					
800	32		410	80		140			24		56
900	36		420	80		150					
1,000	40	M36	500	90	M36	180					
1,100	44		520	100		190					
1,200	48		570	100		200			28		64

NOTES (1) In the above list, the values for size 40 to 350 mm indicate the bolt dimensions when an AVTS flange is used. The values for size 400 to 600 mm indicate the bolt dimensions when a JIS B2238 "steel pipe flange" (nominal pressure 10K, corrugated) is used. The values for size 700 to 1200 mm indicate the bolt dimensions when a JIS B2238 "iron pipe flange" (nominal pressure 10K or 5K) is used.
(2) The quantity of nuts and washers for Bolt A indicates the number of 2 sets (1 bolt / 2 nuts, 2 washers). The quantity for Bolt B indicate the number of 1 set (1 bolt / 1 nut, 1 washer).

■ JIS5K

UNIT: mm

mm	inch	BOLT A			BOLT B				QTY		
		d	L	S	d1	L1	S1	S2	BOLT A	BOLT B	NUT / WASHER
40	1 1/2	M12	100	30	–	–	–	–	4	–	8
50	2		105								
65	2 1/2		110								
80	3	M16	120	35					8		16
100	4		130	40							
125	5		140								
150	6		150								
200	8	M20	195	55					12		24
250	10		225								
300	12		240								
350	14		255	65							
400	16	M22	260	55					16		32
450	18		270								
500	20		280						20		40
600	24	M24	320	60							

NOTES (1) In the above list, the values for size 40 to 350 mm indicate the bolt dimensions when an AVTS flange is used. The values for 400 to 600 mm indicate the bolt dimensions when a JIS B2238 "steel pipe flange" (nominal pressure 10K, corrugated) is used.
(2) The quantity of nuts and washers for Bolt A indicates the number of 2 sets (1 bolt / 2 nuts, 2 washers).
(3) The values for 350 to 600 mm indicate the dimensions when a rotary damper is used.

■ WATERWORKS

UNIT: mm

mm	inch	BOLT A			BOLT B				QTY		
		d	L	S	d1	L1	S1	S2	BOLT A	BOLT B	NUT / WASHER
50	2	M16	125	40	–	–	–	–	4	–	8
80	3		135	45							
100	4		150						6		12
125	5		160								
150	6		165								
200	8		185	50					8		16
250	10	M20	225	55							
300	12		240						10		20
350	14	M22	240								
400	16		290	60					12		24
450	18	M24	310								
700	28	M30	350	60					16		32
800	32		380	60		130	FULL THREAD			8	40
900	36		390	70		130					
1,000	40		450	70	M30	140			20		48
1,100	44		450	70		160					
1,200	48		510	70		160			24		56

NOTES (1) In the above list, the values for size 40 to 300 mm indicate the bolt dimensions when an AVTS flange is used. The values for size 350 to 1200 mm indicate the bolt dimensions when a JIS G5527 "ductile iron fitting" (nominal pressure 7.5K) is used.
(2) The quantity of nuts and washers for Bolt A indicates the number of 2 sets (1 bolt / 2 nuts, 2 washers). The quantity for Bolt B indicate the number of 1 set (1 bolt / 1 nut, 1 washer).

BUTTERFLY VALVE TYPE 56D, 75D

■ JIS10K

UNIT: mm

mm	inch	BOLT A			BOLT B		QTY		
		d	L	S	d1	L1	BOLT A	BOLT B	NUT / WASHER
400	16	M24	290	60	M24	120	14	4	32
450	18		310	65		120	16	8	40
500	20		320	65		120			
600	24	M30	350	75	M30	140	20		48

NOTES (1) In the above list, the values for size 400 to 600 mm indicate the bolt dimensions when a JIS B2238 "steel pipe flange" (nominal pressure 10K, corrugated) is used.
(2) The quantity of nuts and washers for Bolt A indicates the number of 2 sets (1 bolt / 2 nuts, 2 washers). The quantity for Bolt B indicate the number of 1 set (1 bolt / 1 nut, 1 washer).

■ WATERWORKS

UNIT: mm

mm	inch	BOLT A			BOLT B		QTY		
		d	L	S	d1	L1	BOLT A	BOLT B	NUT / WASHER
400	16	M22	290	60	–	–	12	–	24
450	18	M24	310	60					
500	20		320						
600	24		340				16		32

NOTES (1) In the above list, the values for size 400 to 600 mm indicate the bolt dimensions when a JIS G5527 "ductile iron fitting" (nominal pressure 7.5K) is used.
(2) The quantity of nuts and washers for Bolt A indicates the number of 2 sets (1 bolt / 2 nuts, 2 washers).

BUTTERFLY VALVE TYPE 55

■ JIS10K

UNIT: mm

mm	inch	BOLT A			QTY	
		d	TYPE 55		BOLT A	NUT / WASHER
			L	S		
50	2	M16	130	35	4	8
80	3		140		8	16
100	4		145			
125	5	M20	165	40		
150	6		180			
200	8		195		12	24
250	10	M22	215			

■ JIS5K

UNIT: mm

mm	inch	BOLT A			QTY	
		d	TYPE 55		BOLT A	NUT / WASHER
			L	S		
50	2	M12	110	30	4	8
80	3	M16	125	40	8	16
100	4		135			
125	5		140			
150	6		155			
200	8	M20	195	45	12	24
250	10		210			

BUTTERFLY VALVE TYPE 55IS

■ JIS10K

UNIT: mm

mm	inch	BOLT A			QTY	
		d	TYPE 55IS		BOLT A	NUT / WASHER
			L	S		
50	2	M16	130	35	4	8
80	3		135		8	16
100	4		140			
125	5	M20	155	40		
150	6		160			

■ JIS5K

UNIT: mm

mm	inch	BOLT A			QTY	
		d	TYPE 55IS		BOLT A	NUT / WASHER
			L	S		
50	2	M12	110	30	4	8
80	3	M16	120			
100	4		130			
125	5		135	40	8	16
150	6		135			

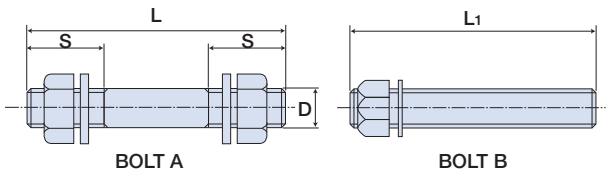

CONNECTING THROUGH BOLT TIGHTENING TORQUE

UNIT: N·m {kgf·cm}

mm ▶	40	50, 65	80, 100	125, 150	200, 250	300, 350	400, 450	500, 600	700, 800, 850	900, 1,000	1,100	1,200
inch ▶	1 1/2	2, 2 1/2	3, 4	5, 6	8, 10	12, 14	16, 18	20, 24	28, 32, 34	36, 40	44	48
	20 {204}	22.5 {230}	30 {306}	40 {408}	55 {561}	60 {612}	80 {816}	100 {1020}	130 {1327}	170 {1735}	200 {2042}	220 {2245}

NOTE The bolt tightening torque for butterfly valve type 55IS of size 50 mm is 30 N-m.

PIPE BOLT DIMENSIONS (REFERENCE: RECOMMENDED DATA)

▶ BUTTERFLY VALVE

LUG BUTTERFLY VALVE TYPE 57L

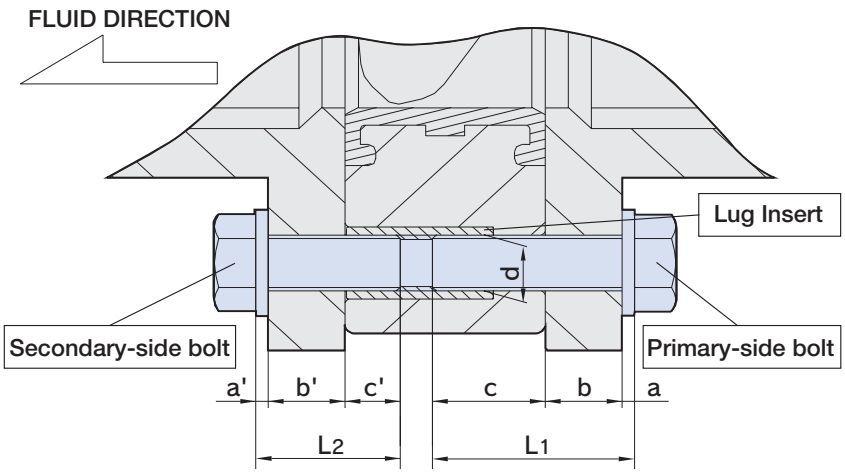

1. BOLT LENGTH WHEN AV TS FLANGE 10K IS USED (WITH WASHER OF ISO 7092 OR EQUIVALENT)

For 80 and 100 mm, bolts with the same length can be used for both primary and secondary sides.

UNIT: mm

mm	inch	BOLT d (SIZE)	BOLT LENGTH		WASHER (SIZE)	Lug Insert		
			PRIMARY SIDE	SECONDARY SIDE				
			L1	L2		SCREW SIZE	WIDTH ACROSS FLATS	HEIGHT
80	3	M16	45	45	16	M16	24	40
100	4	M16	50	50	16	M16	24	40
125	5	M20	60	50	20	M20	30	50
150	6	M20	65	50	20	M20	30	50
200	8	M20	75	55	20	M20	30	60
250	10	M22	95	60	22	M22	32	70

BOLT LENGTH WHEN A FLANGE OTHER THAN IN 2.1 IS USED * HIGH NUTS LISTED ABOVE CAN BE USED.

<PRIMARY SIDE BOLT LENGTH, L1>

Primary side bolt length L1 = a Washer thickness + b Flange thickness + c (Resin thickness + Engagement allowance)

UNIT: mm

mm	inch	a	b	c
80	3	WASHER THICKNESS TO BE USED	FLANGE THICKNESS TO BE USED	17
100	4			26
125	5			29
150	6			33
200	8			39
250	10			53

<SECONDARY SIDE BOLT LENGTH, L2>

Secondary side bolt length L2 = a' Washer thickness + b' Flange thickness + c' (Engagement allowance)

UNIT: mm

mm	inch	a'	b'	c'
80	3	WASHER THICKNESS TO BE USED	FLANGE THICKNESS TO BE USED	13
100	4			13
125	5			13
150	6			16
200	8			16
250	10			18

PIPE BOLT DIMENSIONS

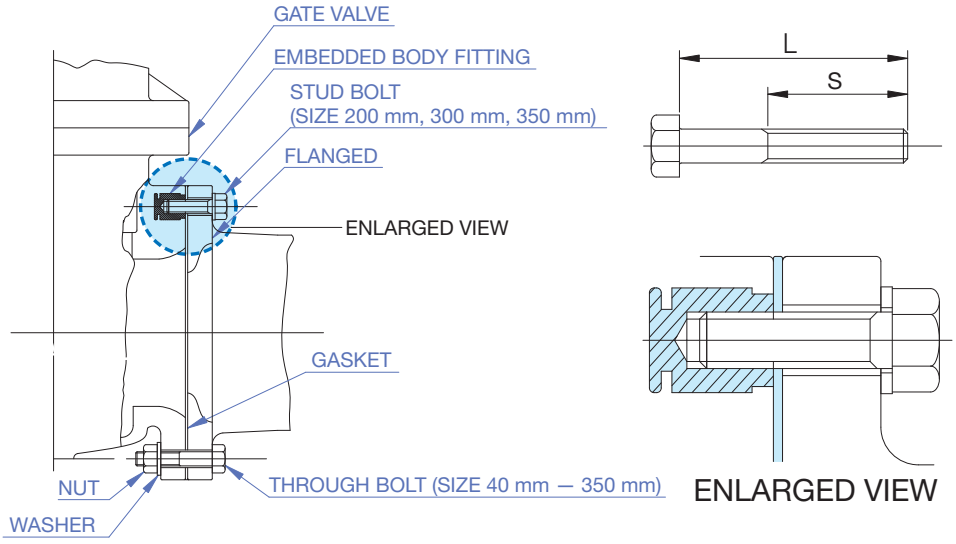

	mm	STANDARD															
		WATERWORKS STANDARD AV TS FLANGE				WATERWORKS STANDARD / IRON FLANGE JIS G5527				JIS 10K STANDARD AV TS FLANGE				JIS 10K STANDARD / IRON FLANGE JIS B2212			
		NAME															
		BOLT NUT SIZE	WASHER SIZE	L	S	BOLT NUT SIZE	WASHER SIZE	L	S	BOLT NUT SIZE	WASHER SIZE	L	S	BOLT NUT SIZE	WASHER SIZE	L	S
THROUGH BOLT	32	—	—	—	—	—	—	—	—	M16	16	70	38	M16	16	70	38
	40	—	—	—	—	—	—	—	—	M16	16	70	38	M16	16	70	38
	50	M16	16	75	38	M16	16	70	38	M16	16	75	38	M16	16	70	38
	65	—	—	—	—	—	—	—	—	M16	16	75	38	M16	16	75	38
	75(80)	M16	16	80	38	M16	16	80	38	M16	16	80	38	M16	16	75	38
	100	M16	16	85	38	M16	16	80	38	M16	16	80	38	M16	16	75	38
	125	M16	16	85	38	M16	16	85	38	M20	20	85	46	M20	20	85	46
	150	M16	16	85	38	M16	16	85	38	M20	20	90	46	M20	20	85	46
	200	M16	16	90	38	M16	16	90	38	M20	20	90	46	M20	20	85	46
	250	M20	20	95	46	M20	20	90	46	M22	22	100	50	M22	22	90	50
	300	M20	20	95	46	M20	20	95	46	M22	22	100	50	M22	22	90	50
	350	—	—	—	—	M22	22	95	50	M22	22	110	50	M22	22	95	50
STUD BOLT	200	—	—	—	—	—	—	—	—	M20	20	50	46	M20	20	45	45
	250	—	—	—	—	—	—	—	—	—	—	—	—	—	—	—	—
	300	—	—	—	—	—	—	—	—	M22	22	55	50	M22	22	50	50
	350	—	—	—	—	M22	22	50	50	M22	22	60	50	M22	22	50	50

2. LENGTH OF T-SHAPED HANDLE OF AV GATE VALVE (CAP TYPE)

The close-off torque (torque required for complete closure) and the length of T-shaped handle handgrip are as follows:

mm	CLOSE-OFF TORQUE N·m {kgf·cm}	T-SHAPED HANDLE ℓ (mm) [REFERENCE]
32·40	15 {153}	200
50	15 {153}	200
65	23 {235}	200
75(80)	25 {255}	200
100	30 {306}	200
125	40 {408}	300

mm	CLOSE-OFF TORQUE N·m {kgf·cm}	T-SHAPED HANDLE ℓ (mm) [REFERENCE]
150	60 {612}	350
200	100 {1020}	550
250	110 {1122}	550
300	130 {1327}	700
350	150 {1531}	700

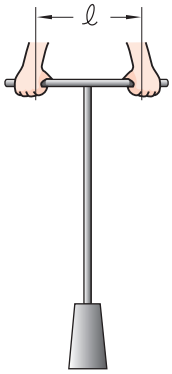

NOTES (1) When turning the T-shaped handle, do not insert a pipe or similar object. Do not turn it with two people either.
(2) When the shaft is too long, adjust the ℓ dimension using the handgrip.
(3) The length of handle handgrip, ℓ, is set so that the operating force (one hand) is approximately 150N to 200N {15kgf to 20kgf}.
(4) Contact us when using an outside screw section valve (for vacuum sewage) because a special turning bar is required.

PRODUCT WEIGHT LIST (REFERENCE)

DIAPHRAGM VALVE

TYPE 14, TYPE 15, TYPE 72 —— FLANGED MANUAL

UNIT: kg

mm	inch	BODY MATERIAL					VALVE TYPE
		U-PVC	C-PVC	PP	PVDF	PVDF	
		BONNET MATERIAL					
		U-PVC	PP	PP	PPG	PVDF	
15	1/2	0.7	0.7	0.6	0.8	0.8	TYPE 14
20	3/4	0.8	0.8	0.6	0.9	0.9	
25	1	1.1	1.1	0.8	1.2	1.3	
32	1 1/4	1.4	1.4	1.0	1.5	1.6	
40	1 1/2	2.8	2.7	2.2	2.9	3.1	
50	2	3.6	3.5	2.8	3.9	4.1	
65	2 1/2	5.6	5.3	4.2	6.0	6.5	
80	3	7.4	7.2	5.4	7.4	8.4	
100	4	11.5	12.6	8.3	12.5	13.1	
125	5	22.0	—	19.5	23.5	26.3	TYPE 15
150	6	34.5	—	30.5	35.5	40.7	
200	8	52.6	—	45.0	57.3	62.3	TYPE 72
250	10	93.3	—	77.3	97.6	110.2	

TRUE UNION TYPE 14 —— SOCKET, THREADED MANUAL

UNIT: kg

mm	inch	BODY MATERIAL					VALVE TYPE
		U-PVC	C-PVC	PP	PVDF	PVDF	
		BONNET MATERIAL					
		U-PVC	PP	PP	PPG	PVDF	
15	1/2	0.5	0.5	0.4	0.6	0.6	TRUE UNION TYPE 14
20	3/4	0.6	0.6	0.5	0.7	0.7	
25	1	0.9	0.9	0.7	1.0	1.1	
32	1 1/4	1.1	1.1	0.8	1.2	1.3	
40	1 1/2	2.6	2.5	2.0	2.7	2.9	
50	2	2.9	2.8	2.3	3.1	3.3	

TYPE 14 AUTOMATIC PNEUMATIC TYPE AN

UNIT: kg

mm	inch	DOUBLE ACTING				AIR TO OPEN				AIR TO CLOSE			
		U-PVC	C-PVC	PP	PVDF	U-PVC	C-PVC	PP	PVDF	U-PVC	C-PVC	PP	PVDF
15	1/2	2.5	2.5	2.0	2.5	3.0	3.0	2.5	3.0	2.6	2.6	2.1	2.6
20	3/4	2.5	2.5	2.0	2.5	3.0	3.0	2.5	3.0	2.6	2.6	2.1	2.6
25	1	2.5	2.5	2.5	3.0	3.0	3.0	3.0	3.5	2.6	2.6	2.6	3.1
32	1 1/4	3.0	3.0	2.5	3.0	3.5	3.5	3.0	3.5	3.1	3.1	2.6	3.1
40	1 1/2	5.5	5.5	5.0	5.5	7.0	7.0	6.5	7.0	5.7	5.7	5.2	5.7
50	2	6.5	6.5	5.5	6.5	8.0	8.0	7.0	8.0	6.7	6.7	5.7	6.7

TYPE 14, TYPE 15, TYPE 72 AUTOMATIC PNEUMATIC TYPE AV

UNIT: kg

mm	inch	DOUBLE ACTING				AIR TO OPEN				AIR TO CLOSE			
		U-PVC	C-PVC	PP	PVDF	U-PVC	C-PVC	PP	PVDF	U-PVC	C-PVC	PP	PVDF
65	2 1/2	10.0	10.0	9.0	10.5	22.5	22.5	21.5	23.0	17.0	17.0	16.0	17.5
80	3	12.0	12.0	10.5	12.5	34.5	34.5	33.0	35.0	24.5	24.5	23.0	25.0
100	4	19.0	19.0	16.5	19.5	61.0	61.0	58.5	61.5	45.5	45.5	43.0	46.0
125	5	31.0	—	28.5	33.0	138	—	136	141	73.0	—	70.5	75.0
150	6	59.0	—	55.5	62.0	148	—	145	150	89.0	—	86	91.0
200	8	113	—	107	118	—	—	—	—	—	—	—	—
250	10	183	—	173	190	—	—	—	—	—	—	—	—

TYPE 14 PNEUMATIC TYPE AP

mm	inch	AIR TO OPEN								AIR TO CLOSE				DOUBLE ACTING			
		0.6MPa				1.0MPa											
		U-PVC	C-PVC	PP	PVDF	U-PVC	C-PVC	PP	PVDF	U-PVC	C-PVC	PP	PVDF	U-PVC	C-PVC	PP	PVDF
65	2 1/2	13.1	13.1	12.1	13.6	13.7	13.7	12.7	14.2	12.0	12.0	11.0	12.5	11.4	11.4	10.4	11.9
80	3	15.3	15.3	13.8	15.8	18.1	18.1	16.6	18.6	13.6	13.6	12.1	14.1	12.5	12.5	11.0	13.0
100	4	21.2	21.2	18.7	21.7	28.4	28.4	25.9	28.9	22.7	22.7	20.2	23.2	17.3	17.3	14.8	17.8

▶DIAPHRAGM VALVE

TYPE 14, TYPE 15 AUTOMATIC ELECTRIC TYPE H

UNIT: kg

mm	inch	U-PVC	C-PVC	PP	PVDF
15	1/2	8.0	8.0	7.5	8.0
20	3/4	8.0	8.0	7.5	8.0
25	1	8.0	8.0	8.0	8.5
32	1 1/4	8.5	8.5	8.0	8.5
40	1 1/2	9.5	9.5	9.0	9.5
50	2	10.5	10.5	9.5	10.5
65	2 1/2	15.0	15.0	14.0	15.5
80	3	16.5	16.5	15.0	17.0
100	4	19.5	19.5	17.0	20.0
125	5	45.0	—	42.5	47.0
150	6	54.5	—	50.5	57.0

TYPE 15, TYPE 72 AUTOMATIC ELECTRIC TYPE S

UNIT: kg

mm	inch	U-PVC	PP	PVDF
125	5	62.5	60.0	64.5
150	6	94.5	90.5	97.5
200	8	118	113	123
250	10	177	167	185

TYPE 14 AUTOMATIC ELECTRIC TYPE M

UNIT: kg

mm	inch	U-PVC	C-PVC	PP	PVDF
15	1/2	6.5	6.5	6.0	6.5
20	3/4	6.5	6.5	6.0	6.5
25	1	6.5	6.5	6.5	7.0
32	1 1/4	7.0	7.0	6.5	7.5
40	1 1/2	11.0	11.0	10.5	11.0
50	2	12.0	12.0	11.0	12.0
65	2 1/2	18.0	18.0	17.0	19.0
80	3	20.0	20.0	18.0	20.0
100	4	23.0	23.0	20.0	23.0

TRUE UNION TYPE 14 AUTOMATIC PNEUMATIC TYPE AN

UNIT: kg

mm	inch	DOUBLE ACTING				AIR TO OPEN				AIR TO CLOSE			
		U-PVC	C-PVC	PP	PVDF	U-PVC	C-PVC	PP	PVDF	U-PVC	C-PVC	PP	PVDF
15	1/2	2.3	2.3	1.8	2.3	2.3	2.8	2.3	2.8	2.3	2.4	1.9	2.4
20	3/4	2.3	2.3	1.9	2.3	2.8	2.8	2.4	2.8	2.3	2.4	2.0	2.4
25	1	2.3	2.3	2.4	2.8	2.8	2.8	2.9	2.8	2.3	2.4	2.5	2.9
32	1 1/4	2.7	2.7	2.4	2.8	3.2	3.2	2.9	3.12	2.7	2.7	2.5	2.9
40	1 1/2	5.3	5.3	4.8	5.3	6.3	6.8	6.3	6.8	5.5	5.5	5.0	5.5
50	2	5.8	5.8	5.0	5.7	6.8	6.8	6.5	7.2	6.0	6.0	5.2	5.9

TRUE UNION TYPE 14 AUTOMATIC ELECTRIC TYPE H

UNIT: kg

mm	inch	U-PVC	C-PVC	PP	PVDF
15	1/2	8.0	8.0	7.5	8.0
20	3/4	8.0	8.0	7.5	8.0
25	1	8.0	8.0	8.0	8.0
32	1 1/4	8.5	8.5	8.0	8.5
40	1 1/2	9.5	9.5	9.0	9.5
50	2	10.5	10.5	9.5	10.5

TRUE UNION TYPE 14 AUTOMATIC ELECTRIC TYPE M

UNIT: kg

mm	inch	U-PVC	C-PVC	PP	PVDF
15	1/2	6.5	6.5	6.0	6.5
20	3/4	6.5	6.5	6.0	6.5
25	1	6.5	6.5	6.5	7.0
32	1 1/4	7.0	7.0	7.0	7.0
40	1 1/2	11.0	11.0	10.5	11.0
50	2	12.0	12.0	11.0	12.0

PRODUCT WEIGHT LIST (REFERENCE)

▶DIAPHRAGM VALVE

TYPE AI AUTOMATIC PNEUMATIC TYPE AI

UNIT: kg

mm	inch	DOUBLE ACTING				AIR TO OPEN (0.7 MPa TYPE)				AIR TO OPEN (1.0 MPa TYPE)				AIR TO CLOSE			
		U-PVC	C-PVC	PP	PVDF	U-PVC	C-PVC	PP	PVDF	U-PVC	C-PVC	PP	PVDF	U-PVC	C-PVC	PP	PVDF
15	1/2	1.0	1.1	0.9	1.1	1.2	1.3	1.0	1.3	1.3	1.3	1.1	1.4	1.1	1.2	1.0	1.2
20	3/4	1.3	1.3	1.1	1.4	1.4	1.5	1.3	1.6	1.5	1.6	1.3	1.6	1.3	1.4	1.2	1.5
25	1	1.5	1.7	1.3	1.7	1.8	1.9	1.6	2.0	1.8	1.9	1.6	2.0	1.6	1.7	1.4	1.8
32	1 1/4	1.8	1.9	1.5	2.0	2.0	2.2	1.8	2.3	2.1	2.2	1.8	2.3	1.9	2.0	1.6	2.1
40	1 1/2	4.0	4.2	3.6	4.3	4.9	5.1	4.5	5.2	5.0	5.2	4.6	5.3	4.4	4.6	4.0	4.7
50	2	4.8	5.1	4.1	5.2	5.7	6.0	5.1	6.2	6.7	7.0	6.0	7.2	5.2	5.5	4.6	5.7

TRUE UNION TYPE AI AUTOMATIC PNEUMATIC TYPE AI

UNIT: kg

mm	inch	DOUBLE ACTING				AIR TO OPEN (0.7 MPa TYPE)				AIR TO OPEN (1.0 MPa TYPE)				AIR TO CLOSE			
		U-PVC	C-PVC	PP	PVDF	U-PVC	C-PVC	PP	PVDF	U-PVC	C-PVC	PP	PVDF	U-PVC	C-PVC	PP	PVDF
15	1/2	0.9	0.9	0.8	0.9	1.1	1.1	0.9	1.1	1.1	1.2	1.0	1.2	1.0	1.0	0.9	1.0
20	3/4	1.1	1.2	1.0	1.2	1.3	1.4	1.2	1.4	1.4	1.4	1.2	1.4	1.2	1.3	1.1	1.3
25	1	1.4	1.4	1.2	1.5	1.6	1.7	1.5	1.7	1.7	1.7	1.5	1.8	1.4	1.5	1.3	1.6
32	1 1/4	1.6	1.7	1.4	1.8	1.8	1.9	1.6	2.0	1.9	2.0	1.7	2.0	1.7	1.8	1.5	1.8
40	1 1/2	3.7	3.8	3.4	3.9	4.6	4.7	4.3	4.8	4.7	4.9	4.4	4.9	4.1	4.3	3.8	4.4
50	2	4.5	4.6	3.9	4.7	5.4	5.5	4.8	5.6	6.4	6.5	5.8	6.6	5.0	5.0	4.3	5.1

TYPE 16 AUTOMATIC PNEUMATIC TYPE AD

UNIT: kg

mm	inch	DOUBLE ACTING			AIR TO OPEN		
		FLANGED	THREADED	SOCKET	FLANGED	THREADED	SOCKET
15	1/2	0.6	0.4	0.4	0.7	0.5	0.4
20	3/4	1.0	0.7	0.7	1.0	0.7	0.7
25	1	1.2	0.8	0.8	1.3	0.8	0.8
40	1 1/2	3.4	2.8	2.7	3.8	3.1	3.1
50	2	5.7	4.9	4.9	6.4	5.6	5.6

BALL VALVE

TYPE 21, TYPE 21α MANUAL

UNIT: kg

mm	inch	FLANGED (JIS10K)				THREADED (JIS)				SOCKET, SPIGOT			
		U-PVC	C-PVC	PP	PVDF	U-PVC	C-PVC	PP	PVDF	U-PVC	C-PVC	PP	PVDF
15	1/2	0.4	0.4	0.3	0.5	0.2	0.2	0.2	0.2	0.2	0.2	0.2	0.2
20	3/4	0.6	0.7	0.5	0.7	0.3	0.3	0.3	0.4	0.3	0.3	0.3	0.3
25	1	0.8	0.9	0.7	1.0	0.4	0.5	0.4	0.5	0.4	0.5	0.4	0.5
32	1 1/4	1.2	1.3	0.9	1.5	0.7	0.7	0.6	0.8	0.6	0.7	0.5	0.7
40	1 1/2	1.7	1.8	1.2	2.0	1.1	1.2	0.7	1.3	1.0	1.0	0.8	1.2
50	2	2.5	2.7	1.8	3.7	1.8	2.0	1.2	2.2	1.7	1.8	1.2	2.0
65	2 1/2	3.3	3.5	2.4	4.0	2.3	2.5	1.7	2.8	2.4	2.6	1.7	2.8
80	3	4.9	5.5	3.4	5.7	3.7	4.0	2.5	4.5	3.8	4.1	2.4	4.4
100	4	10.5	10.6	7.0	12.1	8.8	9.9	6.0	11.3	9.2	9.9	6.0	10.8

Spigot: U-PVC, PP, PVDF only.

WATER BALL VALVE MANUAL

UNIT: kg

mm	inch	SOCKET	THREADED (JIS)
		U-PVC	
15	1/2	0.2	0.2
20	3/4	0.3	0.3
25	1	0.5	0.5
32	1 1/4	0.7	0.6
40	1 1/2	1.0	0.8
50	2	1.7	1.5

3 WAY BALL VALVE TYPE 23 MANUAL

UNIT: kg

mm	inch	FLANGED (JIS10K)				SOCKET				THREADED (JIS)			
		U-PVC	C-PVC	PP	PVDF	U-PVC	C-PVC	PP	PVDF	U-PVC	C-PVC	PP	PVDF
15	1/2	0.5	0.5	0.3	0.6	0.2	0.2	0.1	0.2	0.2	0.3	0.2	0.4
20	3/4	0.8	0.9	0.5	0.9	0.4	0.4	0.2	0.4	0.4	0.4	0.2	0.4
25	1	1.3	1.4	0.8	1.5	0.6	0.6	0.4	0.7	0.6	0.6	0.4	0.7
32	1 1/4	2.2	2.4	1.4	2.6	1.3	1.4	0.8	1.5	1.4	1.5	0.9	1.7
40	1 1/2	2.2	2.4	1.4	2.6	1.3	1.4	0.8	1.5	1.4	1.5	0.9	1.7
50	2	3.5	3.7	2.2	4.0	2.5	2.7	1.6	2.9	2.6	2.8	1.7	3.1
65	2 1/2	7.0	7.5	4.4	8.5	5.8	5.8	3.5	6.8	5.5	6.0	3.5	6.5
80	3	7.0	7.5	4.4	8.5	6.0	6.0	3.6	7.0	5.5	6.0	3.5	6.5
100	4	14.0	15.0	9.0	16.5	13.5	14.0	8.5	15.5	13.0	14.0	8.5	15.5

3 WAY BALL VALVE TYPE 23 H MANUAL

UNIT: kg

mm	inch	FLANGED (JIS10K)	SOCKET, THREADED, SPIGOT
		PP	PP
25	1	0.9	0.4
32	1 1/4	1.7	1.1
40	1 1/2	1.7	1.1

LAB COCK MANUAL

UNIT: g

CONNECTION	U-PVC
1/4 MALE × 1/4 MALE	25
1/2 MALE × 1/2 MALE	30
1/4 FEMALE × 1/4 FEMALE	30
3/8 FEMALE × 3/8 FEMALE	30
1/4 HOSE × 1/4 HOSE	25
1/2 MALE × ELBOW 16 mm	55

COMPACT BALL VALVE TYPE 27 MANUAL

UNIT: kg

mm	inch	Socket End (JIS)		Threaded End (JIS)	
		U-PVC	C-PVC	U-PVC	C-PVC
13	3/8	0.1	0.1	-	-
15	1/2	0.1	0.1	0.1	0.1
20	3/4	0.2	0.2	0.2	0.2
25	1	0.3	0.3	0.3	0.3
32	1 1/4	0.4	0.5	0.4	0.5
40	1 1/2	0.7	0.7	0.7	0.8
50	2	1.2	1.2	1.2	1.3

PRODUCT WEIGHT LIST (REFERENCE)

▶ BALL VALVE

TYPE 21, TYPE 21α AUTOMATIC PNEUMATIC TYPE TA

UNIT: kg

mm	inch	DOUBLE ACTING										
		FLANGED				THREADED				SOCKET		
		U-PVC	C-PVC	PP	PVDF	U-PVC	C-PVC	PP	PVDF	U-PVC	C-PVC	PP
15	1/2	2.0	2.0	1.5	2.0	1.5	1.5	1.5	1.5	1.5	1.5	1.5
20	3/4	2.0	2.0	2.0	2.0	1.5	1.5	1.5	2.0	2.0	1.5	1.5
25	1	2.5	2.5	2.0	2.5	2.0	2.0	1.5	2.0	2.0	2.0	1.5
32	1 1/4	2.5	3.0	2.0	3.0	2.0	2.0	2.0	2.5	2.0	2.0	—
40	1 1/2	3.5	3.5	3.0	3.5	3.0	3.0	2.5	3.0	3.0	3.0	2.5
50	2	4.5	4.5	3.5	4.5	3.5	3.5	3.0	4.0	3.5	3.5	3.0
65	2 1/2	6.5	6.5	5.5	7.0	5.5	5.5	5.0	6.0	5.5	5.5	5.0
80	3	9.5	10.0	8.0	10.5	8.5	9.0	7.0	9.5	8.5	9.0	7.5
100	4	15.0	16.0	12.0	17.0	14.5	15.0	12.0	16.0	14.5	15.0	12.0

mm	inch	AIR TO OPEN / AIR TO CLOSE										
		FLANGED				THREADED				SOCKET		
		U-PVC	C-PVC	PP	PVDF	U-PVC	C-PVC	PP	PVDF	U-PVC	C-PVC	PP
15	1/2	3.5	3.5	3.5	3.5	3.5	3.5	3.5	3.5	3.5	3.5	3.5
20	3/4	4.0	4.0	3.5	4.0	3.5	3.5	3.5	3.5	3.5	3.5	3.5
25	1	4.0	4.0	4.0	4.0	3.5	3.5	3.5	3.5	3.5	4.0	3.5
32	1 1/4	4.5	4.5	4.0	4.5	4.0	4.0	3.5	4.0	4.0	4.0	—
40	1 1/2	5.0	5.5	4.5	5.5	4.5	4.5	4.0	5.0	4.5	4.5	4.0
50	2	6.0	6.0	5.0	6.0	5.5	5.5	4.5	5.5	5.0	5.0	4.5
65	2 1/2	9.5	9.5	8.5	10.0	8.5	8.5	8.0	9.0	8.5	8.5	8.0
80	3	14.5	15.0	13.0	15.5	13.5	14.0	12.0	14.5	14.0	14.0	12.5
100	4	20.0	21.0	17.0	22.0	19.5	20.0	16.5	21.0	20.0	20.0	16.5

TYPE 21, TYPE 21α AUTOMATIC PNEUMATIC TYPE AA

UNIT: kg

mm	inch	DOUBLE ACTING											AIR TO OPEN / AIR TO CLOSE										
		FLANGED				THREADED				SOCKET			FLANGED				THREADED				SOCKET		
		U-PVC	C-PVC	PP	PVDF	U-PVC	C-PVC	PP	PVDF	U-PVC	C-PVC	PP	U-PVC	C-PVC	PP	PVDF	U-PVC	C-PVC	PP	PVDF	U-PVC	C-PVC	PP
15	1/2	1.0	1.0	0.9	1.1	0.8	0.8	0.8	0.8	0.8	0.8	0.7	1.6	1.6	1.5	1.7	1.4	1.4	1.3	1.4	1.4	1.4	1.3
20	3/4	1.2	1.2	1.0	1.4	0.9	0.9	0.9	1.0	0.9	0.9	0.8	1.8	1.8	1.6	1.9	1.5	1.5	1.5	1.6	1.7	1.5	1.4
25	1	1.5	1.5	1.2	1.7	1.0	1.1	0.9	1.1	1.0	1.2	0.9	2.1	2.2	1.8	2.3	1.6	1.7	1.5	1.7	1.7	1.6	1.5
32	1 1/4	1.9	2.0	1.5	2.1	1.3	1.3	1.1	1.5	1.3	1.3	1.1	2.5	2.6	2.0	2.7	1.9	1.9	1.6	2.1	1.9	1.9	—
40	1 1/2	2.7	2.8	2.1	3.0	2.0	2.1	1.7	2.3	2.0	2.1	1.7	4.0	4.1	3.4	4.2	3.3	3.4	3.0	3.6	3.3	3.3	2.9
50	2	3.5	3.7	2.8	4.2	2.8	2.9	2.2	3.2	2.8	2.9	2.1	4.8	5.0	4.0	5.4	4.1	4.2	3.4	4.5	4.0	4.1	3.3

TYPE 21, TYPE 21α AUTOMATIC ELECTRIC TYPE T

UNIT: kg

mm	inch	FLANGED				THREADED				SOCKET		
		U-PVC	C-PVC	PP	PVDF	U-PVC	C-PVC	PP	PVDF	U-PVC	C-PVC	PP
15	1/2	2.5	2.5	2.5	2.5	2.5	2.5	2.5	2.5	2.5	2.5	2.5
20	3/4	3.0	3.0	2.5	3.0	2.5	2.5	2.5	2.5	2.5	2.5	2.5
25	1	3.0	3.0	3.0	3.0	2.5	2.5	2.5	3.0	2.5	2.5	2.5
32	1 1/4	3.0	3.5	3.0	3.5	3.0	3.0	2.5	3.0	3.0	3.0	—
40	1 1/2	3.5	3.5	3.0	4.0	3.0	3.5	3.0	3.5	3.0	3.5	3.0
50	2	4.0	4.5	3.5	4.5	4.0	4.0	3.5	4.0	4.0	4.0	3.5
65	2 1/2	7.0	7.0	6.0	7.5	6.0	6.5	6.0	6.5	6.0	6.5	6.0
80	3	8.0	8.0	6.5	8.5	7.0	7.5	6.0	7.5	7.0	7.5	6.5
100	4	11.5	12.0	9.0	12.5	11.0	11.0	8.5	12.0	11.0	11.0	8.5

WATER BALL VALVE AUTOMATIC PNEUMATIC TYPE VC

UNIT: kg

mm	inch	DOUBLE ACTING		AIR TO OPEN / AIR TO CLOSE	
		THREADED	SOCKET	THREADED	SOCKET
		U-PVC	U-PVC	U-PVC	U-PVC
15	1/2	0.4	0.4	0.6	0.6
20	3/4	0.5	0.5	0.7	0.7
25	1	0.8	0.8	1.1	1.1
32	1 1/4	1.0	1.0	1.9	1.8
40	1 1/2	1.5	1.5	2.2	2.1
50	2	2.2	2.2	2.9	2.9

WATER BALL VALVE AUTOMATIC ELECTRIC TYPE V

UNIT: kg

mm	inch	THREADED, SOCKET
		U-PVC
15	1/2	1.1
20	3/4	1.2
25	1	1.4
32	1 1/4	2.0
40	1 1/2	2.3
50	2	3.0

TYPE 23 (3 WAY VALVE) AUTOMATIC PNEUMATIC TYPE TA

UNIT: kg

mm	inch	DOUBLE ACTING										
		FLANGED				THREADED				SOCKET		
		U-PVC	C-PVC	PP	PVDF	U-PVC	C-PVC	PP	PVDF	U-PVC	C-PVC	PP
15	1/2	2.0	2.0	1.8	2.0	2.0	2.0	2.0	2.0	2.0	2.0	1.9
20	3/4	2.5	2.5	2.3	2.5	2.5	2.0	2.0	2.0	2.0	2.0	1.9
25	1	3.0	3.0	2.5	3.0	3.0	2.0	2.0	2.5	2.0	2.0	1.9
32	1 1/4	4.0	4.5	3.2	5.0	3.5	3.5	3.0	3.5	3.5	3.5	—
40	1 1/2	4.0	4.5	3.2	5.0	4.0	3.5	3.0	3.5	3.5	3.5	3.0
50	2	5.0	5.5	3.7	5.5	5.0	4.0	3.1	4.5	4.0	4.5	3.1
65	2 1/2	12.0	12.5	9.4	13.5	10.8	11.0	8.5	12.0	10.8	10.8	8.4
80	3	12.0	12.5	9.4	13.5	10.5	11.0	8.5	12.0	11.0	11.0	8.5
100	4	20.0	21.0	15.0	23.0	19.0	19.5	14.0	21.5	19.0	19.5	14.0

mm	inch	AIR TO OPEN / AIR TO CLOSE										
		FLANGED				THREADED				SOCKET		
		U-PVC	C-PVC	PP	PVDF	U-PVC	C-PVC	PP	PVDF	U-PVC	C-PVC	PP
15	1/2	4.0	4.0	3.8	4.0	3.5	3.5	3.5	3.5	3.5	3.5	3.4
20	3/4	4.0	4.5	3.8	4.5	4.0	4.0	3.8	4.0	4.0	4.0	3.8
25	1	4.5	5.0	4.0	5.0	4.0	4.0	3.8	4.0	4.0	4.0	3.8
32	1 1/4	6.0	6.0	5.2	6.5	5.0	5.0	4.5	5.5	5.0	5.0	—
40	1 1/2	6.0	6.0	5.2	6.5	5.0	5.0	4.5	5.5	5.0	5.0	4.5
50	2	6.5	7.0	5.7	7.5	5.5	6.0	4.6	6.0	5.5	6.0	4.6
65	2 1/2	17.0	17.0	14.4	18.5	15.3	16.0	13.5	17.0	15.8	15.8	13.5
80	3	17.0	17.5	14.4	18.5	15.3	16.0	13.5	17.0	16.0	16.0	13.6
100	4	25.0	26.0	20.0	28.0	24.0	24.5	19.5	26.5	24.0	24.5	19.6

TYPE 23 (3 WAY VALVE) AUTOMATIC ELECTRIC TYPE T

UNIT: kg

mm	inch	FLANGED				THREADED				SOCKET		
		U-PVC	C-PVC	PP	PVDF	U-PVC	C-PVC	PP	PVDF	U-PVC	C-PVC	PP
15	1/2	2.5	2.5	2.5	2.5	2.5	2.5	2.5	2.5	2.5	2.5	2.5
20	3/4	3.0	3.0	2.5	3.0	2.5	2.5	2.5	2.5	2.5	2.5	2.5
25	1	3.0	3.0	3.0	3.0	2.5	2.5	2.5	3.0	2.5	2.5	2.5
32	1 1/4	3.0	3.5	3.0	3.5	3.0	3.0	2.5	3.0	3.0	3.0	—
40	1 1/2	3.5	3.5	3.0	4.0	3.0	3.5	3.0	3.5	3.0	3.5	3.0
50	2	4.0	4.5	3.5	4.5	4.0	4.0	3.5	4.0	4.0	4.0	3.5
65	2 1/2	7.0	7.0	6.0	7.5	6.0	6.5	6.0	6.5	6.0	6.5	6.0
80	3	8.0	8.0	6.5	8.5	7.0	7.5	6.0	7.5	7.0	7.5	6.5
100	4	11.5	12.0	9.0	12.5	11.0	11.0	8.5	12.0	11.0	11.0	8.5

PRODUCT WEIGHT LIST (REFERENCE)

BUTTERFLY VALVE

TYPE 57, TYPE 56, TYPE 75, TYPE 55, TYPE 55IS, TYPE 56D, TYPE 75D, ROTARY DAMPER (STANDARD) —— LEVER TYPE / GEAR TYPE MANUAL

UNIT: kg

mm	inch	TYPE 57, TYPE 56, TYPE 75			TYPE 55	TYPE 55IS	TYPE 56D TYPE 75D	ROTARY DAMPER (STANDARD TYPE)		
		U-PVC	PP	PVDF	FCD-S	FCD-S	PDCPD	U-PVC	PP	PVDF
40	1 1/2	1.3 / 3.4	1.1 / 3.1	1.4 / 3.5	—	—	—	1.1 / 3.1	0.9 / 3.0	1.4 / 3.3
50	2	1.5 / 3.5	1.2 / 3.3	1.7 / 3.8	3.0 / 4.9	2.8 / 4.9	—	1.3 / 3.3	1.0 / 3.1	1.7 / 3.6
65	2 1/2	1.7 / 3.8	1.4 / 3.4	1.9 / 4.0	—	4.0 / 6.0	—	1.5 / 3.5	1.2 / 3.3	2.0 / 3.7
80	3	1.9 / 3.9	1.6 / 3.6	2.2 / 4.2	4.5 / 6.4	4.2 / 6.2	—	1.7 / 3.7	1.3 / 3.4	2.3 / 4.0
100	4	2.5 / 4.5	2.0 / 4.0	2.9 / 4.9	6.0 / 7.9	5.6 / 7.7	—	2.3 / 4.2	1.7 / 3.8	3.1 / 4.8
125	5	4.9 / 6.5	4.0 / 5.6	5.7 / 7.3	10.5 / 11.4	8.8 / 10.4	—	4.4 / 6.0	3.5 / 5.1	5.3 / 6.9
150	6	5.8 / 7.4	4.6 / 6.2	6.9 / 8.5	– / 14.4	– / 12.5	—	5.3 / 6.9	4.2 / 5.8	6.6 / 8.1
200	8	9.3 / 10.7	7.4 / 8.9	11.0 / 12.5	– / 22.9	– / 23.0	—	8.4 / 9.9	6.6 / 8.1	10.1 / 12.0
250	10	– / 14.7	– / 12.2	– / 18.6	– / 32.9	—	—	11.2 / 13.7	8.0 / 10.5	22.5 / 25.0
300	12	– / 28.0	– / 24.0	– / 34.5	—	—	—	17.0 / 22.5	15.0 / 20.5	32.7 / 38.2
350	14	– / 30.2	– / 26.3	– / 36.8	—	—	—	19.0 / 24.5	16.0 / 21.5	35.2 / 40.7
400	16	—	– / 36.0	– / 46.0	—	—	– / 47	—	22.0 / 27.5	48.5 / 54.0
450	18	—	– / 95.5	– / 103.0	—	—	– / 100	—	28.0 / 33.5	50.0 / 55.5
500	20	—	– / 112.0	– / 124.0	—	—	– / 114	—	36.0 / 41.5	57.5 / 63.0
600	24	—	– / 136.0	– / 157.0	—	—	– / 140	—	66.0 / 71.5	79.0 / 84.5

LUG BUTTERFLY VALVE TYPE 57L —— LEVER TYPE / GEAR TYPE MANUAL

UNIT: kg

mm	inch	PDCPD	
		DISC: PP	DISC: PVDF
80	3	2.7 / 4.7	2.8 / 4.9
100	4	3.3 / 5.3	3.5 / 5.6
125	5	6.3 / 8.5	6.9 / 9.0
150	6	7.3 / 8.9	8.1 / 9.6
200	8	13.7 / 15.1	15.0 / 16.5
250	10	– / 20.3	– / 22.7

PDCPD BUTTERFLY VALVE MANUAL

UNIT: kg

mm	inch	MANUAL
700	28	380
800	32	460
900	36	550
1,000	40	830
1,100	44	1,000
1,200	48	1,100

BUTTERFLY VALVE TYPE 58 MANUAL

UNIT: kg

mm	inch	MANUAL	
		DISC: PP	DISC: PVDF
700	28	190	210

TYPE 57, TYPE 56, TYPE 75 AUTOMATIC PNEUMATIC TYPE TA

UNIT: kg

mm	inch	DOUBLE ACTING			AIR TO OPEN / AIR TO CLOSE		
		U-PVC	PP	PVDF	U-PVC	PP	PVDF
40	1 1/2	2.8	2.6	3.0	4.5	4.3	4.7
50	2	3.0	2.7	3.2	4.7	4.4	4.9
65	2 1/2	4.0	3.7	4.3	6.8	6.5	7.1
80	3	4.2	3.9	4.5	7.0	6.7	7.3
100	4	6.1	5.6	6.6	11.2	10.7	11.7
125	5	11.1	10.3	12.2	21.0	20.2	22.1
150	6	11.9	11.0	13.3	21.8	20.9	23.2
200	8	18.6	17.0	21.1	36.8	35.2	39.3
250	10	32.5	29.9	36.1	64.5	62.9	69.1
300	12	41.7	37.5	47.5	74.7	70.5	80.5
350	14	96.1	91.6	103	196	192	203
400	16	—	106	138	—	206	238
450	18	—	146	185	—	—	—
500	20	—	158	209	—	—	—
600	24	—	186	263	—	—	—

TYPE 57 AUTOMATIC ELECTRIC TYPE T

UNIT: kg

mm	inch	U-PVC	PP	PVDF
40	1 1/2	5.7	5.5	5.9
50	2	5.9	5.6	6.1
65	2 1/2	6.1	5.8	6.4
80	3	6.3	6.0	6.6
100	4	6.9	6.4	7.4
125	5	11.0	10.2	12.1
150	6	16.6	15.7	18.0
200	8	20.0	18.4	22.5
250	10	38.5	35.9	42.1
300	12	47.2	43.0	53.0
350	14	49.9	45.4	57.0

TYPE 57, TYPE 56, TYPE 75 AUTOMATIC ELECTRIC TYPE S

UNIT: kg

mm	inch	U-PVC	PP	PVDF
40	1 1/2	15.5	15.3	15.7
50	2	15.7	15.4	15.9
65	2 1/2	15.9	15.6	16.2
80	3	16.1	15.8	16.4
100	4	16.7	16.2	17.2
125	5	18.6	17.8	19.7
150	6	19.4	18.5	20.8
200	8	27.8	26.2	30.3
250	10	32.5	29.9	36.1
300	12	94	90	100
350	14	97	93	104
400	16	—	122	154
450	18	—	137	177
500	20	—	150	201
600	24	—	178	254

TYPE 56D, TYPE 75D AUTOMATIC PNEUMATIC TYPE TW

UNIT: kg

mm	inch	PDCPD
400	16	139
450	18	152
500	20	166
600	24	192

TYPE 56D, TYPE 75D AUTOMATIC ELECTRIC TYPE S

UNIT: kg

mm	inch	PDCPD
400	16	124
450	18	137
500	20	151
600	24	177

PDCPD LARGE SIZE AUTOMATIC ELECTRIC TYPE S

UNIT: kg

mm	inch	PDCPD
700	28	425
800	32	560
900	36	650
1,000	40	960
1,100	44	1375
1,200	48	1475

PRODUCT WEIGHT LIST (REFERENCE)

▶ BUTTERFLY VALVE

TYPE 55 AUTOMATIC PNEUMATIC TYPE TA

UNIT: kg

mm	inch	DOUBLE ACTING	AIR TO OPEN / AIR TO CLOSE
		FCD-S	FCD-S
50	2	4.5	6.0
80	3	7.0	9.5
100	4	10.0	15.0
125	5	14.0	19.0
150	6	20.5	30.1
200	8	33.5	50.6
250	10	52.0	84.7

TYPE 55 AUTOMATIC ELECTRIC TYPE T

UNIT: kg

mm	inch	FCD-S
50	2	7.5
80	3	9.0
100	4	10.7
125	5	17.0
150	6	26.2
200	8	34.1
250	10	55.7

TYPE 55 AUTOMATIC ELECTRIC TYPE S

UNIT: kg

mm	inch	FCD-S
50	2	16.0
80	3	17.5
100	4	19.0
125	5	23.5
150	6	27.0
200	8	41.5
250	10	49.5

ROTARY DAMPER TYPE 57, TYPE 56, TYPE 75 AUTOMATIC PNEUMATIC TYPE TA

UNIT: kg

mm	inch	DOUBLE ACTING			AIR TO OPEN / AIR TO CLOSE		
		U-PVC	PP	PVDF	U-PVC	PP	PVDF
40	1 1/2	2.4	2.1	2.5	4.1	3.8	4.2
50	2	2.5	2.2	2.7	4.2	3.9	4.4
65	2 1/2	2.8	2.4	3.0	4.5	4.1	4.7
80	3	2.9	2.6	3.2	4.6	4.3	4.9
100	4	3.5	3.0	4.0	5.2	4.7	5.7
125	5	7.2	6.3	8.2	12.3	11.4	13.3
150	6	8.2	6.9	9.3	13.3	12.0	14.4
200	8	13.8	11.9	16.0	24.1	22.2	26.3
250	10	21.4	18.1	26.0	31.7	28.4	36.3
300	12	26.1	21.7	33.6	36.4	32.0	43.9
350	14	32.7	27.8	41.8	50.5	45.6	59.6
400	16	—	51.8	83.8	—	84.8	117
450	18	—	59.3	98.3	—	97.2	136
500	20	—	70.3	121	—	109	160
600	24	—	97.4	174	—	137	214

ROTARY DAMPER TYPE 57, TYPE 56 AUTOMATIC ELECTRIC TYPE T

UNIT: kg

mm	inch	U-PVC	PP	PVDF
40	1 1/2	5.6	5.1	5.5
50	2	5.7	5.2	5.6
65	2 1/2	6.0	5.3	5.9
80	3	6.1	5.4	6.0
100	4	6.7	5.8	6.8
125	5	9.0	7.1	9.0
150	6	10.5	8.3	10.7
200	8	21.1	17.3	21.4
250	10	26.9	21.9	29.7
300	12	35.6	25.9	37.8
350	14	38.3	27.9	41.9
400	16	—	46.5	64.7

ROTARY DAMPER TYPE 57, TYPE 56, TYPE 75 AUTOMATIC ELECTRIC TYPE S

UNIT: kg

mm	inch	U-PVC	PP	PVDF
40	1 1/2	15.4	15.2	15.6
50	2	15.6	15.3	15.8
65	2 1/2	15.8	15.5	16.1
80	3	15.9	15.6	16.2
100	4	16.4	15.9	16.9
125	5	18.2	17.4	19.3
150	6	18.8	17.9	20.2
200	8	28.0	26.4	30.5
250	10	29.8	27.2	33.4
300	12	39.2	35.5	39.5
350	14	44.6	42.6	42.2
400	16	—	49.0	59.0
450	18	—	61.1	100
500	20	—	72.1	123
600	24	—	99.2	176

CONTROL VALVE

CONTROL VALVE AUTOMATIC PNEUMATIC TYPE AV

UNIT: kg

mm	inch	E/P POSITIONER				P/P POSITIONER			
		DOUBLE ACTING		AIR TO OPEN		DOUBLE ACTING		AIR TO OPEN	
		U-PVC	PVDF	U-PVC	PVDF	U-PVC	PVDF	U-PVC	PVDF
15	1/2	6.1	6.4	7.9	8.2	5.1	5.4	6.9	7.2
25	1	7.3	7.7	9.8	10.0	6.3	6.7	8.8	9.2
50	2	10.0	—	15.0	—	9.0	—	14.0	—
80	3	14.0	—	24.0	—	13.0	—	23.0	—
100	4	19.0	—	34.0	—	18.0	—	33.0	—

CONTROL VALVE AUTOMATIC ELECTRIC TYPE M

UNIT: kg

mm	inch	U-PVC	PVDF
15	1/2	4.5	6.3
25	1	5.5	7.4
50	2	16.0	—
80	3	19.0	—
100	4	22.0	—

PRODUCT WEIGHT LIST (REFERENCE)

CHECK VALVE

SWING CHECK VALVE MANUAL

UNIT: kg

mm	inch	FLANGED (JIS10K)		
		HI-PVC	PP	PVDF
15	1/2	0.8	0.6	1.0
20	3/4	0.9	0.6	1.0
25	1	1.7	1.2	2.0
30	1 1/4	2.6	1.7	3.0
40	1 1/2	2.6	1.7	3.0
50	2	4.0	2.7	4.6
65	2 1/2	5.5	3.5	6.5
80	3	6.0	4.0	7.5
100	4	10.5	7.0	12.0
125	5	16.0	12.0	20.0
150	6	22.0	16.0	27.0
200	8	34.5	24.5	42.0

WAFER CHECK VALVE MANUAL

UNIT: kg

mm	inch	FLANGED (JIS10K)
		U-PVC
80	3	1.0
100	4	1.8
125	5	2.1
150	6	2.9
200	8	4.6
250	10	7.6
300	12	12.0

BALL CHECK VALVE MANUAL

UNIT: kg

mm	inch	FLANGED (JIS10K)		SOCKET				THREADED			
		U-PVC	PP	U-PVC	C-PVC	PP	PVDF	U-PVC	C-PVC	PP	PVDF
15	1/2	0.3	0.3	0.1	0.1	0.1	0.1	0.1	0.1	0.1	0.1
20	3/4	0.4	0.4	0.2	0.2	0.1	0.2	0.2	0.2	0.1	0.2
25	1	0.6	0.7	0.3	0.3	0.2	0.3	0.3	0.3	0.2	0.3
40	1 1/2	1.1	1.1	0.6	0.6	0.3	0.7	0.6	0.7	0.4	0.7
50	2	1.8	1.6	0.8	0.9	0.5	1.1	0.8	0.9	0.6	1.0
80	3	4.0	4.3	2.4	2.6	1.5	2.8	2.2	2.4	1.5	2.9
100	4	7.2	11.0	5.9	6.1	3.0	6.5	5.8	6.2	3.7	7.0

BALL FOOT VALVE MANUAL

UNIT: kg

mm	inch	FLANGED (JIS10K)		SOCKET			THREADED			
		U-PVC	C-PVC	U-PVC	C-PVC	PP	U-PVC	C-PVC	PP	PVDF
15	1/2	0.1	0.3	0.1	0.1	0.1	0.1	0.1	0.1	0.1
20	3/4	0.2	0.4	0.2	0.2	0.2	0.2	0.2	0.1	0.2
25	1	0.4	0.7	0.3	0.4	0.3	0.3	0.4	0.2	0.4
40	1 1/2	1.5	1.5	0.5	0.9	0.5	0.8	0.9	0.5	1.0
50	2	1.5	1.9	0.9	1.0	0.7	0.9	1.0	0.7	1.5
80	3	4.3	5.0	3.5	3.5	2.2	3.5	3.5	2.0	4.0
100	4	9.0	10.0	7.0	7.5	4.8	6.7	7.5	4.0	8.5

OTHERS

CONSTANT FLOW VALVE MANUAL

UNIT: kg

mm	
15	1.4
20	1.5
25	1.5
50	5.0
80	8.5
100	16.5

NEEDLE VALVE MANUAL

UNIT: kg

mm	
15	1.4
20	1.5
25	1.6

SEDIMENT STRAINER (TYPE Y) MANUAL

UNIT: kg

mm	FLANGED	SOCKET	THREADED
15	0.6	0.3	0.3
20	0.8	0.5	0.5
25	1.2	0.7	0.8
32	2.5	2.0	2.0
40	2.2	1.5	1.6
50	2.8	1.8	1.9
65	6.3	5.4	5.3
80	6.5	5.4	6.0
100	20.5	18.0	19.5

SELF CONTROL VALVE MANUAL

UNIT: kg

mm	PRESSURE REDUCING TYPE			PRESSURE RELIEF TYPE			PRESSURE RETAINING TYPE		
	FLANGED	SOCKET	THREADED	FLANGED	SOCKET	THREADED	FLANGED	SOCKET	THREADED
15	1.0	0.8	0.8	1.0	0.6	0.7	0.7	0.5	0.5
20	1.8	1.5	1.5	1.2	0.8	0.8	0.9	0.6	0.6
25	2.4	1.9	1.9	2.5	1.7	1.7	2.0	1.5	1.5
32	4.0	3.4	3.4	2.9	1.9	2.0	2.2	1.6	1.6
40	4.4	3.7	3.7	8.6	7.6	7.6	7.8	7.1	7.2
50	6.8	6.1	6.1	9.1	7.9	8.0	8.1	7.4	7.4

GATE VALVE

GATE VALVE —— FLANGED MANUAL

UNIT: kg

mm	TYPE P		TYPE S			
	INSIDE SCREW		INSIDE SCREW		OUTSIDE SCREW	
	ROUND HANDLE TYPE	CAP TYPE	ROUND HANDLE TYPE	CAP TYPE	ROUND HANDLE TYPE	CAP TYPE*
40	2.5	3.5	3.0	4.0	3.2	—
50	3.5	4.5	4.0	5.0	4.5	—
65	5.5	6.0	5.5	6.0	7.5	—
75(80)	7.0	8.0	8.0	9.0	8.3	—
100	8.5	9.5	12.5	13.0	12.6	13.0
125	13.5	14.5	15.0	15.5	24.0	—
150	19.5	20.0	22.5	23.0	24.8	25.7
200	29.5	30.0	31.5	32.0	44.5	35.0
250	42.0	43.0	—	—	71.0	60.0
300	68.0	68.5	—	—	—	—
350	81.5	82.0	—	—	—	—

AIR RELEASE VALVE MANUAL

UNIT: kg

mm	FLANGED	THREADED
25	8.8	3.8
75	6.9	—
100	10.0	—
150	21.0	—
200	41.0	—

ISOLATING VALVE MANUAL

UNIT: kg

mm	
75	3.3
100	6.5
150	9.5
200	14.0

NOTES (1) The above values are the estimated weight of flange type.
(2) The asterisk indicates the weight of section valves (applicable for shallow layer burial).

ALFALFA VALVE® TYPE 82 MANUAL

UNIT: kg

mm	FLANGED	SOCKET
50	1.3	1.0
80	2.0	1.6
100	3.3	2.7

ROTARY ANGLE VALVE MANUAL

UNIT: kg

mm	HANDLE FIXING	T-SHAPED HANDLE
50	3.0	3.0
75	4.5	4.5

ANGLE BUTTERFLY VALVE MANUAL

UNIT: kg

mm	HANDLE FIXING
80	5.4
100	10.0

PROPER FLOW RANGE

CONSTANT FLOW VALVE

RENGE FOR PRESET FLOW RATE AND WORKING DIFFERENTIAL PRESSURE

mm	inch	TYPE	FLOW RATE		RANGEABILITY	WORKING DIFFERENTIAL PRESSURE [MPa {kgf/cm2}]	ACCURACY
			[m3/hr]	[Gal/min]			
15	1/2	B	0.04 — 0.8	0.176 — 3.52	20:1	0.020 — 0.098 {0.2 — 1.0}	WITHIN +/- 6% OF FULL SCALE
		C	0.08 — 0.8	0.35 — 3.52	10:1	0.029 — 0.196 {0.3 — 2.0}	
20	3/4	B	0.06 — 1.2	0.26 — 5.28	20:1	0.020 — 0.098 {0.2 — 1.0}	
		C	0.12 — 1.2	0.53 — 5.28	10:1	0.029 — 0.196 {0.3 — 2.0}	
25	1	A	0.5 — 2.0	2.20 — 8.81	4:1	0.020 — 0.098 {0.2 — 1.0}	
		B	0.1 — 2.0	0.441 — 8.81	20:1	0.020 — 0.098 {0.2 — 1.0}	
		C	0.2 — 2.0	0.881 — 8.81	10:1	0.029 — 0.196 {0.3 — 2.0}	
50	2	A	2.0 — 8.0	8.81 — 35.22	4:1	0.020 — 0.098 {0.2 — 1.0}	
		B	0.4 — 8.0	1.76 — 35.22	20:1	0.020 — 0.098 {0.2 — 1.0}	
		C	0.8 — 8.0	3.52 — 35.22	10:1	0.029 — 0.196 {0.3 — 2.0}	
80	3	A	5.0 — 20.0	22.02 — 88.07	4:1	0.020 — 0.098 {0.2 — 1.0}	
		B	1.0 — 20.0	4.403 — 88.07	20:1	0.020 — 0.098 {0.2 — 1.0}	
		C	2.0 — 20.0	8.81 — 88.07	10:1	0.029 — 0.196 {0.3 — 2.0}	
		D	15.0 — 30.0	66.04 — 132.1	2:1	0.029 — 0.147 {0.3 — 1.5}	
100	4	C	10.0 — 60.0	44.03 — 264.2	6:1	0.029 — 0.196 {0.3 — 2.0}	
		D	30.0 — 60.0	132.1 — 264.2	2:1	0.020 — 0.147 {0.2 — 1.5}	

*Note: The possible preset range of the flow rate and the range of the working differential pressure differs from type to type among A, B, C, and D. The right type, therefore, it should be selected from the above table in accordance with the working conditions.

SELF CONTROL VALVE

Pressure setting: 0.05 - 1.0 MPa

	mm	MAXIMUM FLOW RATE [L/h]	APPROPRIATE FLOW RANGE [L/h] (30 - 70% of MAXIMUM FLOWRATE)	APPROPRIATE FLOW RANGE [L/m] (30 - 70% of MAXIMUM FLOWRATE)
PRESSURE REDUCING TYPE	15	1,200	360 — 840	6.0 — 14.0
	20	2,400	720 — 1,680	12.0 — 28.0
	25	3,500	1,050 — 2,450	17.5 — 40.8
	32	6,000	1,800 — 4,200	30.0 — 70.0
	40	8,000	2,400 — 5,600	40.0 — 93.3
	50	15,000	4,500 — 10,500	75.0 — 175.0
PRESSURE RELIEF TYPE PRESSURE RETAINING TYPE	15	1,300	390 — 910	6.5 — 15.2
	20	2,200	660 — 1,540	11.0 — 25.7
	25	3,500	1,050 — 2,450	17.5 — 40.8
	32	5,700	1,710 — 3,990	28.5 — 66.5
	40	9,000	2,700 — 6,300	45.0 — 105.0
	50	14,000	4,200 — 9,800	70.0 — 163.3

PRODUCT CERTIFICATION TARGET LIST

AS OF FEBRUARY 1, 2017

ITEM	NSF/ANSI61		ABS (American Bureau of Shipping)		NK (Nippon Kaiji Kyokai)
	MATERIAL	SIZE	MATERIAL	SIZE or STANDARD	PRODUCT GROUP
3 WAY BALL VALVE TYPE 23	PVC/EPDM	15 — 100mm			AV Vinyl pipes AV HI Vinyl Pipes AV Super Pipes(HT) AV Vinyl Fittings AV HI Vinyl Fittings AV Super Fittings(HT) AV Vinyl Valves AV AV HI Vinyl Valves AV Super Valves AV TS Flanges AV HI TS Flanges AV Super TS Flanges(HT) * Above products are comply with NK approval, and are adequate for their service conditions may be used for following (1). (1) Drinking water pipes, domestic waterpipes (including hot water pipes) and sanitary pipes located within accommondation spaces and engine rooms as well as deck scuppers located within spaces.
	PVC/FKM	15 — 100mm			
BALL VALVE TYPE 21α	PVC/EPDM	15 — 50mm	PVC/EPDM	15 — 50mm	
	PVC/FKM	15 — 50mm	PVC/FKM	15 — 50mm	
			C-PVC/EPDM	15 — 50mm	
			C-PVC/FKM	15 — 50mm	
BALL VALVE TYPE 21	PVC/EPDM	65 — 100mm	PVC/EPDM	65 — 100mm	
	PVC/FKM	65 — 100mm	PVC/FKM	65 — 100mm	
			C-PVC/EPDM	65 — 100mm	
			C-PVC/FKM	65 — 100mm	
COMPACT BALL VALVE TYPE 27	PVC/EPDM	13 — 50mm			
LAB COCK	PVC/EPDM	—			
GATE VALVE TYPE P	PVC/PP/EPDM	40 — 350mm			
SEDIMENT STRAINER (TYPE Y)	PVC/EPDM	15 — 100mm			
	PVC/FKM	15 — 100mm			
BALL CHECK VALVE	PVC/EPDM	80 — 100mm			
	PVC/FKM	80 — 100mm			
TRUE UNION BALL CHECK VALVE	PVC/EPDM	15 — 50mm			
	PVC/FKM	15 — 50mm			
BUTTERFLY VALVE TYPE 57	BODY: PVC	40 — 350mm	BODY: PVC, PP	50 — 300mm	
	DISC: PP		DISC: PVC, PP, PVDF		
	SHEET: EPDM		SHEET: EPDM, FKM		
PIPE			U-PVC	JIS K 6741	
			U-PVC	JIS K 6742	
			C-PVC	JIS K 6776	
FITTING			U-PVC	JIS K 6743	
			C-PVC	JIS K 6777	
TS FLANGE			U-PVC	JIS 10K 13 — 150mm	
			U-PVC	JIS 5K 13 — 150mm	
			C-PVC	JIS 10K 13 — 50mm	
			C-PVC	JIS 5K 13 — 50mm	

For details of applicable products and intended use as well as certificates other than the above, please contact us.

ASAHI/AV MANUAL VALVE DISCONTINUED PRODUCT LIST (PRODUCTS DISCONTINUED IN 2005 OR LATER)

DISCONTINUED PRODUCT MODEL	MATERIAL	SIZE (mm)	TIME OF PRODUCTION DISCONTINUATION	TIME OF PARTS SUPPLY DISCONTINUATION	RECOMMENDED SUCCESSION MODEL
BUTTERFLY VALVE TYPE 56	PP, PVDF	250 — 350	APR 2005	APR 2010	BUTTERFLY VALVE TYPE 57
FRP LARGE SIZE BUTTERFLY VALVE	FRP	1,350, 1,500	JUL 2005	JUL 2005	—
LIVE BALL	U-PVC, PVDF	15 — 50	DEC 2005	DEC 2010	BALL VALVE TYPE 21α (PERFORATED)
BUTTERFLY VALVE TYPE 84	U-PVC	50 — 200	DEC 2005	DEC 2010	—
FRP LARGE SIZE BUTTERFLY VALVE	FRP	1,100 — 1,200	JUL 2006	JUL 2006	PDCPD LARGE SIZE BUTTERFLY VALVE
GATE VALVE (SOFT SEAL TYPE) COMPATIBLE WITH PE PIPE	HI-PVC	50 — 150	NOV 2006	NOV 2006	—
BALL FOOT VALVE	U-PVC, C-PVC, PVDF	15 — 100	MAY 2009	MAY 2014	BALL FOOT VALVE
BALL VALVE TYPE 21	U-PVC, C-PVC	15 — 50	NOV 2009	NOV 2014	BALL VALVE TYPE 21α
SWING CHECK VALVE (GASKET TYPE)	U-PVC, PP, PVDF (PVDF COATED EPDM)	15 — 200	SEP 2010	SEP 2015	SWING CHECK VALVE (O-RING TYPE) (PFA COATED FKM)
SWING CHECK VALVE (O-RING TYPE)	U-PVC, PP, PVDF	15 — 200	SEP 2010	SEP 2015	SWING CHECK VALVE (O-RING TYPE)
AUTOMATIC WATER FEEDING VALVE (SEMIAUTOMATIC TYPE)	U-PVC	50 — 80	OCT 2015	OCT 2020	—

NOTE Consumable parts are prepared so that they can be supplied for 5 years after the production discontinuation. However, it may become difficult to supply the parts depending on the consumption condition of the parts. In such cases, please contact us for other methods, such as the use of an alternative item.

REVISED RECORD

PAGE	DESCRIPTION
006	UPDATED FOR CERTICATES
018	NEW DIAPHRAGM VALVE PNEUMATIC TYPE AP (DOUBLE ACTING, AIR TO OPEN, AIR TO CLOSE)
067～068	NEW COMPACT BALL VALVE TYPE 27
090	BUTTERFLY VALVE TYPE 58
147	PRESSURE UNIT FOR CHECK VALVES UPDATED TO MPa from KPa
169	PRODUCT MODEL CODE LISTED
183	PRODUCT MODEL CODE LISTED
185～186	DIMENSION UPDATED AND PRODUCT MODEL CODE LISTED
187	PRODUCT MODEL CODE LISTED
189～191	PRODUCT MODEL CODE LISTED
015～190	PRODUCT MODEL CODE LISTED FOR HIGH PURITY SERIES
196	UPDATED TO A SPECIFICATION OF AN ORIGINAL INDICATOR FOR IMPELLER FLOW METER
239	PRODUCT CERTIFICATE LIST UPDATED

ASAHI AV PRECAUTIONS IN HANDLING AND USE OF VALVES

Below are general precautions for safely using ASAHI AV valves.
Precautions specific to each product are provided in a separate instruction manual. For details, please contact our nearest distribution agent or sales office.

1. Notes for pipe design

- Make sure that the working temperature and pressure are within the tolerance range during operation.
  (The maximum working pressure is the value including the water hammer pressure. If the tolerance range is exceeded during use, the valve may be damaged.)
- Select an appropriate material to use. (Some kinds of chemical may erode the surface of parts, causing breakage.) For details, consult our nearest sales office in advance.
- When using a fluid that contains crystalline fluid, use it in a condition where the fluid does not recrystallize. (The valve may become unable to work properly.)
- Consult us when using a fluid containing slurry.
- This product is not explosion-proof. Do not use it in explosive atmospheres. (Doing so may cause breakage or explosion.)
- Operating pressure of pneumatic type automatic valve: The standard operating pressure of pneumatic type is 0.4 MPa {4.1 kgf/cm^2}. When increasing the operating pressure, ensure that the pressure is within the specified range of operating pressure.
- Do not joint with solvent adhesive or welding connection on differential plastic materials.(It may cause damage.)

2. Notes for acceptance, transportation and storage

- Do not ride on the valve or place a heavy object on the valve. (Doing so may cause breakage.)

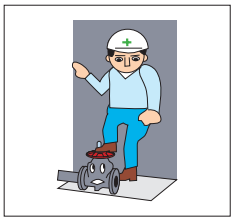

- Keep fire and hot object away from the valve. (Doing so may cause deformation, breakage or fire.)

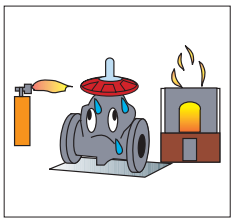

- Avoid direct sunlight and store it indoors. Also avoid storing the valve in a place that may be exposed to high temperatures. (Doing so may cause deformation.)



- Do not give an impact by throwing, dropping or hitting the valve. (Doing so may cause damage or breakage.)
- Do not scratch or stick a sharp object (such as a knife and hook) into the valve.



- Do not pile packed cardboard boxes on top of another too much, to prevent collapsing of the boxes.

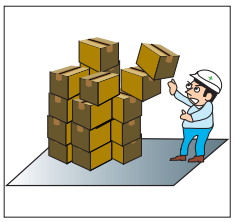

- Do not allow the valve to come in contact with coal tar, creosote (wood preservative agent), white ant exterminating agent, pesticide, or coating material. (Doing so may cause swelling and resulting breakage.)

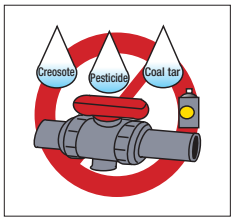

- Be very careful when hanging or slinging the valve. Do not stand under the suspended object.
- Keep the valve in a cardboard box until just before piping installation. Avoid direct sunlight and store it indoors (at room temperatures). Also avoid storing the valve in a place that may be exposed to high temperatures. (Cardboard boxes become weak when get wet. (Take due care when handling and storing the boxes.)



- When transporting the valve, do not use the handle to secure the valve.

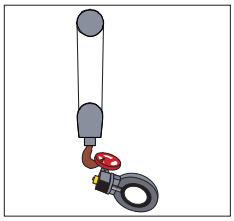

- After unpacking, check that the product has no abnormality and conforms to the specifications.



3. Notes for commissioning of pipe

1) General precautions

- Secure an adequate space for maintenance and inspection.
- Test completed items with hydraulic pressure. (Airtight test using air (gas) is very dangerous.)
- When a positive pressure gas is used for our resin pipe, note that a dangerous situation may occur due to the reaction force peculiar to compressed fluids even when the pressure is the same as the hydraulic pressure. Always take appropriate measures to ensure the safety of surrounding area, such as coating the pipe with a protecting material. If you have any uncertainty, please contact us.

  After the completion of piping work, perform a leak test of the conduit with hydraulic pressure. If it is inevitable to perform a test with air, be sure to consult our nearest sales office in advance.

- Avoid using in places that are constantly exposed to water, dust or direct sunlight. Or, cover the whole product. (The valve may become unable to work properly.)



- When using the valve in unfavorable conditions, it is recommended to cover the whole valve with a protective plastic bag. The automatic driving parts, in particular, may have a malfunction due to corrosion.
- When supporting the pipe with a U-band, be careful not to over-tighten. (It may cause breakage.)
- Before starting the work, be sure to perform safety check of mechanical and electric tools to be used.
- During piping work, always use protective equipment appropriate for the work. (Failure to do so may cause injury.)

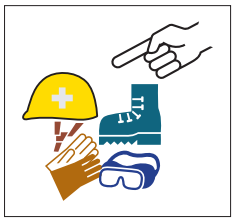

- During installation, be careful not to give a forcible stress, such as tension, compression, bending and impact, on the piping and valves.
- Before replacement of valve or parts, completely remove the fluid from the pipe. If the fluid cannot be removed, reduce the fluid pressure to zero.

2) Notes for connection of true union type

- During piping installation, assembly or disassembly, steady the end connector.
- Before a water flow test, be sure to check that the union nut is securely tightened.

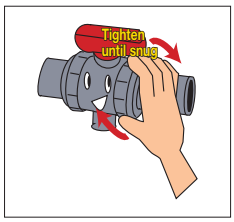

- When tightening the union nut, pay attention to axial-center misalignment and face-to-face dimensions.
- When connecting a resin valve to a metal pipe, be careful that piping stress is given to the resin valve.
- Do not over-tighten the union nut. (It may cause breakage.)

3) Notes for connection of flange

- Ensure that the parallelism and axial-center misalignment dimensions do not exceed the values below. (Failure to do so may cause breakage due to the stress given on the piping.)

SIZE (mm)	AXIAL-CENTER MISALIGNMENT	PARALLELISM
40 — 80	1.0mm	0.8mm
100 — 150	1.0mm	1.0mm
200 — 600	1.5mm	1.0mm

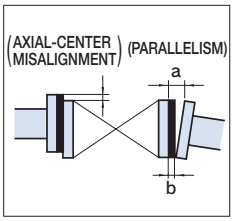

- Tighten the bolts and nuts of the connection flange diagonally according to the specified torque.
  (Failure to do so may cause leak or breakage.)

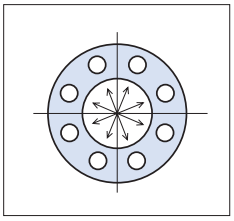

- The connection flanges recommended to be flat face type.

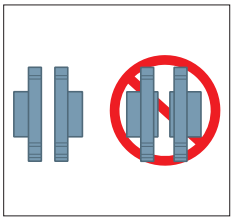

- Check that the flange standard of both sides are not different.
- Be sure to tighten the flanges using sealing gaskets (AV packings), bolts, nuts, and washers, according to the specified tightening torque (except for butterfly valves).

4) Notes for connection of socket (bonding) type

- During installation at low temperatures, be very careful because the solvent fume is difficult to evaporate and liable to remain. (It may cause a solvent crack and resulting breakage.) After piping work, open the both sides of the pipe and ventilate the inside using a blower (of low pressure type) to remove the solvent fume.
- Do not apply too much adhesive. (Doing so may cause a solvent crack and resulting breakage.)

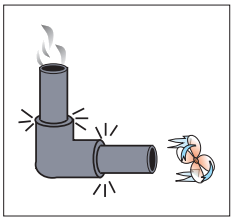

▶3. Notes for commissioning of pipe

● Never stroke the component to insert it. Doing so may cause the pipe to break.

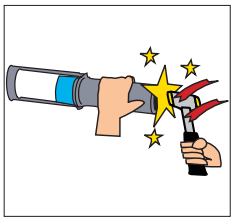

● When using adhesive, ventilate the area well and avoid using fire nearby. Do not inhale the fume directly.

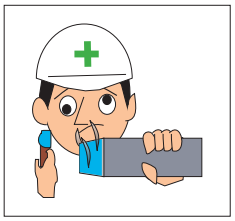

● If the adhesive contacts the skin, remove it immediately. If you feel sick or sense that something is wrong with your body, immediately seek medical attention and receive appropriate treatment.

● For adhesive, use only AV adhesive. (For U-PVC products, use **ASAHIAV** adhesive No. 32, No. 52 or No. 62. For C-PVC products, use **ASAHIAV** adhesive No. 88.)

● Before performing a water flow test, wait until at least 24 hours have passed since the completion of bonding.

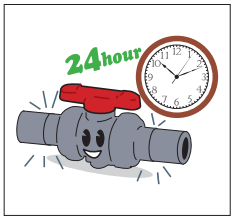

5) Notes for threaded connection

● Check that joint screws are made of resin. (If a metal screw is used for piping work, the end connector may be damaged.)

● For threaded joints of our resin pipe, use sealing tape. If fluid seal or liquid gasket is used, a stress crack (environmental stress crack) may occur.

● Do not over-tighten joint screws. (Doing so may cause breakage.)

* For notes for socket (fusion) connection, refer to the instruction manual of each product. For details, please contact our nearest distribution agent or sales office.

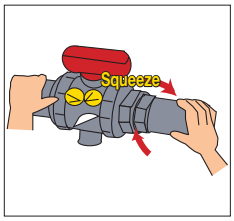

4. Notes for operation and maintenance

● Do not open or close the valve when there is dust or foreign object in the fluid.

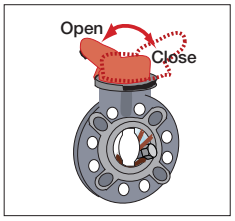

● Perform periodic maintenance. (Temperature changes or aging during long-term storage, operation stop or while in use may cause leakage. For inspection items, refer to the instruction manual of each product. For details, please contact our nearest distribution agent or sales office.)

● Before replacement of valve or parts, completely remove the fluid from the pipe. If the fluid cannot be removed, reduce the fluid pressure to zero.

● The valve body may be damaged due to freezing. In environments where freezing may occur, remove the water in the pipe or take anti-freezing measures using lagging materials.

● Move the valve handle and lever slowly to reduce water hammer.

● When disposing of the valve, always hand it over to a professional waste disposal company.

⚠ Be sure to read the following description of our product warranty

- Always observe the specifications of and the precautions and instructions on using our product.
- We always strive to improve the quality and reliability, but cannot guarantee perfection. Therefore, should you intend to use this product with any equipment or machinery that may pose the risk of serious or even fatal injury, or property damage, ensure an appropriate safety design or take other measures with sufficient consideration given to possible problems. We shall assume no responsibility for any inconvenience stemming from any action on your part without our written consent in the form of specifications or other documented approval.
- The related technical documents, operation manuals, and/or other documentation prescribe precautions on selecting, constructing, installing, operating, maintaining, and servicing our products. For details, consult with our nearest distributor or agent.
- Our product warranty extends for one and a half years after the product is shipped from our factory or one year after the product is installed, whichever comes first. Any product abnormality that occurs during the warranty period or which is reported to us will be investigated immediately to identify its cause. Should our product be deemed defective, we shall assume the responsibility to repair or replace it free of charge.
- Any repair or replacement needed after the warranty period ends shall be charged to the customer.
- The warranty does not cover the following inconveniences by:
  (1) Using our product under any condition not covered by our defined scope of warranty.
  (2) Failure to observe our defined precautions or instructions regarding the construction, installation, handling, maintenance, or servicing of our product.
  (3) Any product other than ours.
  (4) Remodeling, or otherwise modifying our product by anyone other than us.
  (5) Using any part of our product for anything other than the intended use of the product.

  In no event shall we be responsible or liable for any special, indirect, incidental or consequential damages arising in any way in connection with any products.

[Precautions]

* Our product warranty shall not apply in case of using a positive-pressure gas with our plastic piping. Using a positive-pressure gas with our plastic piping may pose a dangerous condition due to the repellent force peculiar to compressed fluids, even when the gas is under the same pressure as water. Therefore, be sure to take the necessary safety precautions such as covering the piping with protective material. For inquiries, please contact us.
  For conducting a leak test on newly installed piping, be sure to check for leaks under water pressure.
* Wrap the threaded joints on our plastic piping with sealing tape.
* Using a liquid sealing agent or liquid gasket may cause stress cracks (environmental stress cracking). Our product warranty shall not apply in case of said use, even when said use is unavoidable.

Export Control

In an effort to remain compliant with international agreements on security, many countries have instituted export controls for advanced goods and technologies which may be used for the proliferation of weapons of mass destruction.
Even in Japan we are sanctioned by the International Export Control Regime and the Chemical Weapons Convention to meet current regulations at home and in countries where we sell our goods and technologies.
In meeting this social and legal obligation, we are asking for your cooperation in providing us information relating to the intended use of our products. Information such as copies of agreements, company organization chart and affidavits of end-use may be required for export permission.
Your cooperation in this endeavor is greatly appreciated and our sales or Asahi distributor people are committed to working with you to continue to provide the best products and services Asahi has to offer.

Global Network

JAPAN

ASAHI YUKIZAI CORPORATION. OVERSEAS DEPARTMENT.
20th Floor, World Trade Center Bldg, 4-1 Hamamatsu-Cho 2-Chome,
Minato-Ku, Tokyo, Japan 105-6120
TEL: +81-3-3578-6015 FAX: +81-3-3578-6025

THAILAND

ASAHI YUKIZAI CORPORATION. BANGKOK REPRESENTATIVE OFFICE.
323 United Center Building, Unit 3004B, 30thFloor, Silom Road, Silom, Bangrak,
Bangkok 10500 THAILAND
TEL: +662-631-1100 FAX: +662-631-1103

KOREA

ASAHI KOREA CO.,LTD [Subsidiary]
#805-D Digitalempire office, 16, Deogyeong-daero
1556beon-gil,Yeongtong-dong, Yeongtong-gu, Suwon-si, Gyeonggi-do, Korea
TEL: +82-31-203-2050 FAX: +82-31-203-2880

SINGAPORE

ASAHI ASIA PACIFIC PTE.LTD. [Subsidiary]
207 Woodlands Avenue 9, #06-55, Singapore 738958
TEL: +65-6755-8033 FAX: +65-6754-7033

CHINA

ASAHI ORGANIC CHEMICALS TRADING (SHANGHAI) CO.,LTD. [Subsidiary]
Rm 405, East Tower, Sun Plaza NO.88 Xianxia Road, Changning District,
Shanghai, China 200336
TEL: +86-21-6278-7862 FAX :+86-21-6278-7892

ASAHI AV VALVE (SHANGHAI) CO., LTD. [Subsidiary]
No.16, Shanghai Malu Fengdeng Industry City, 615 Fengdeng Road, Malu
Town, Jiading District, Shanghai 201818, PRC
TEL: +86-21-6139-2600 FAX: +86-21-6139-2606

GERMANY

ASAHI AV EUROPE GmbH [Subsidiary]
Kaiser-Friedrich-Promenade 61 D-61348 Bad Homburg Germany
TEL: +49-6172-9175-0 FAX: +49-6172-9175-25

USA

ASAHI/AMERICA,INC [Subsidiary]
655 Andover, St.Lawrence, MA 01843 USA
TEL: +1-781-321-5409 FAX: +1-978-685-3010

See our Products website.
http://asahiav.jp/en/

ASAHIAV Japan Search

- Latest News
- Download Catalogs (PDF)
- Download Chemical Resistance Sheet
- Download Installation Operation & Maintenance Manual
- Download drawings (CAD, Outline Dimensional Drawings)



Distributor

Please note that due to product improvements, the specifications, etc.
listed in this catalog are subject to change without prior notice.

First edition: April. 2016. Issued: June. 2017. 3rd Ed. AV-GV-001-E. No. of issues: 2000 copies. Valve & Piping Systems