Deluge Systems | On/Off Valves | Service Valves | Tagua | Engineering Data | Product Selection Guide

Fire Protection

CATALOGUE

TALIS

Fire Protection

TALIS

71
33

ATPLAS RANGE

BAYARD RANGE

BELGICAST RANGE

ERHARD RANGE

FRISCHHUT RANGE

RAPHAEL RANGE

SCHMIEDING RANGE

STRATE RANGE

TALIS FP RANGE

UNIJOINT RANGE

TABLE OF CONTENTS

005 WHO ARE WE

007 OUR VISION OF SUSTAINABLE DEVELOPMENT

009 HOW WE WORK

011 DELUGE SYSTEMS

109 ON/OFF VALVES

143 SERVICE VALVES

153 TAGUA

159 ENGINEERING DATA

175 PRODUCT SELECTION GUIDE

DELUGE SYSTEMS

11

Deluge Systems

Modulating Deluge Systems

Basic Deluge Systems

ON/OFF VALVES

109

Monitor Valves

Hydraulic Hydrants

Mechanical Hydrants

SERVICE VALVES

143

Control Valves

TAGUA

153

155

Tagua

ENGINEERING DATA

159

161

Basic Valves

PRODUCT SELECTION GUIDE

175

177

Product Selection Guide

WHO ARE WE

TALIS is a leading global provider of premium valves, hydrants and other solutions for water flow control.

With a varied range of products, we offer comprehensive solutions for the entire water cycle, from hydrants to butterfly valves, from knife-gate valves to needle valves. Our experience, innovative technology, global expertise and individual consultation process, form the basis for developing sustainable solutions for the efficient handling of the vital resource "water".

With over nine strong brands and 28 entities in Germany, France, Spain, Portugal, Italy, Great Britain, the Netherlands, Russia, Poland, Israel, China, the Middle East, Mexico, India, South Africa, Kazakhstan, Peru and Brazil, TALIS is the largest supplier of valve technology and first choice when it comes down to water valves and services for the whole water cycle.

Deluge Systems

On/Off Valves

Service Valves

Tagua

Engineering Data

Product Selection Guide

WE STRIVE TO MAKE THE WORLD A BETTER PLACE BY BEING THE BEST WATER FLOW CONTROL SOLUTIONS COMPANY WORLDWIDE. We protect water, one of the world's most vital resources, and thereby improve the living conditions of millions of people worldwide

Mr. Christoph Gusenleitner
Chief Executive Officer

29 000
DIFFERENT PRODUCTS IN CATALOGUE

Over 50
SALES PARTNERS

SALES IN
186
COUNTRIES

13
FACTORIES WORLDWIDE

19 000
CUSTOMERS

1400
EMPLOYEES

OUR VISION OF
SUSTAINABLE DEVELOPMENT

780 M

PEOPLE WORLDWIDE CURENTLY DO NOT HAVE ACCESS TO DRINKING WATER

80 %

OF WASTEWATER ON THE PLANET IS NOT RETREATED

50

COUNTRIES
WHERE OUR FIRE CONTROL VALVES ARE IN OPERATION

There is not enough water to go round, and yet it is one of our most essential resources.

At TALIS we strive to develop highly reliable solutions incorporating the smartest technologies available to improve network performance and save water resources. Beyond this commitment to the excellence of our products, we are also responsible for upholding the highest standards with regard to safety and respect for people and the environment.

This is how we can make the world a better place.

« THE QUALITY AND SUSTAINABILITY OF OUR PRODUCTS CHARACTERIZES OUR OFFER. IT COMES DOWN TO MAKING CHOICES.

Choices with respect to materials used, the quality of components and their impact on the environment. Beyond design however, it is above all a question of effectiveness when it comes to protecting water resources.
We make sustainable products, but first and foremost we assist our customers in improving their own practices in terms of water management, from catchment to the release of treated effluents. »

Christophe Busson
TALIS Marketing Technical Leader

TAKING CARE OF ENVIRONMENT

In all its activities, TALIS is committed to being a good employer, neighbour and a fair business partner:

- ISO 14001 certified (environmental management)
- DIN ISO 50001 certified (the company's energy performance)
- Active participation in water focused NGO
- Participant since 2012 (BELGICAST) of United Nations Global Compact

PROVIDING SUSTAINABLE PRODUCTS

Our valve solutions facilitate highest customer benefit whilst being uncompromising in terms of product safety and sustainability.

- High efficiency products with lower pressure drop limiting energy needs
- Addressing the global issue of water shortage with products reducing water leakage
- Keeping water clean by safe coatings

WORKING FOR HEALTH AND SAFETY

Health and safety of our employees and stakeholders is high priority at TALIS.

- Group wide health and safety policy deployed globally
- Proactive detection and elimination of potential risks
- 0 % accident policy
- Continuous improvement of working conditions at all of our sites

WORKING WITH A COMPLIANCE CULTURE

Business Integrity as company culture.

- E-Learning on compliance mandatory for all employees
- Compliance officer at group level
- 4-eyes-principle for all decisions

HOW WE WORK

We achieve results by bringing together teams of experts and specialists who travel and encourage the acquisition of knowledge by all stakeholders and interested parties.

We establish research programs to accelerate progress in R&D. We enhance the technical expertise of our employees and customers in the various product ranges we offer, while encouraging networking between specialists and our own customers.

LONG-TERM SUPPORT

BEFORE SALES

- Specification
- Custom solutions
- Design
- Technical studies

AFTER SALES

- Commissioning
- Technical assistance
- Manufacturer warranty
- Asset management
- Maintenance contract
- Spare parts

WE

share and cultivate trust, respect for transparency and honesty in all our actions worldwide.

YOU

are our customers, our partners, the inspiration behind our innovations and the drivers of our performance.

TOGETHER

we develop and support the talent that invents and deploys cutting-edge solutions, with a view to improving quality of life for all.

« To become the first truly global leader in water flow control solutions, **WE PROVIDE CUSTOMER BENEFIT WITH A HIGHER QUALITY OF SERVICE,** shorter response times and a better understanding of local needs and best-in-class sales processes. »

Steffen Lange
Chief Sales Officer

THE TALIS ACADEMY

Available to our employees and customers to help them grow their knowledge and improve their command of our products, TALIS ACADEMY offers comprehensive theoretical and practical training solutions.

At TALIS: customer training in our brand new TALIS Academy in Meyzieu, France, and Heidenheim, Germany.

On-site: training at the client's premises with a mobile bench dedicated to hydraulic control valves, or using the client's own equipment.

Our programmes are run by various trainers and specialists. For example, the TALIS ACADEMY offer training measures in areas including security and control valves, isolation valves, couplings and fittings, hydrants.

MEYZIEU (FR)

2015

745
PARTICIPANTS

6200h
OF TRAINING

1 400h
in-house training

4 800h
customer training

HEIDENHEIM (D)

2015

1100
PARTICIPANTS

9800h
OF TRAINING

7000h
in-house training

2800h
customer training

Fire Protection

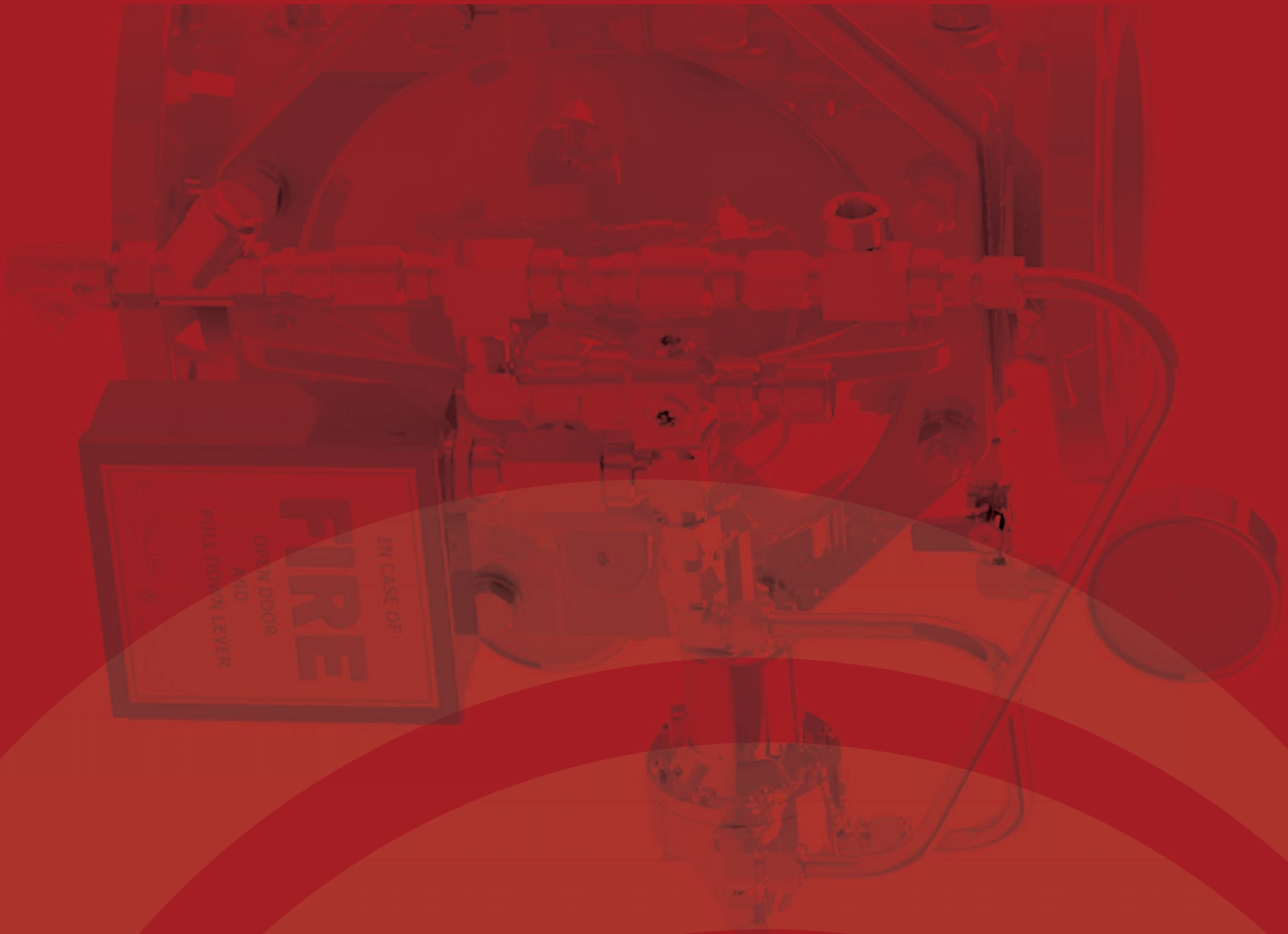

DELUGE SYSTEMS

DELUGE SYSTEMS

FDV-DE0 - 13
FDV-DE1 - 17
FDV-DP0 - 21
FDV-DP1 - 25
FDV-DC0 - 29
FDV-DC1 - 33
FDV-DH0 - 37
FDV-DH1 - 41
FDV-DA0 - 45
FDV-DA1 - 49

MODULATING DELUGE SYSTEMS

FDV-PE0 - 53
FDV-PE1 - 57
FDV-PP0 - 61
FDV-PP1 - 65
FDV-PC0 - 69
FDV-PC1 - 73
FDV-PH0 - 77
FDV-PH1 - 81
FDV-PA0 - 85
FDV-PA1 - 89

BASIC DELUGE SYSTEMS

FDV-AE1 - 93
FDV-AP1 - 97
FDV-AC1 - 101
FDV-AH1 - 105

TALIS FP RANGE

Deluge Systems

Electric Actuated with Local Reset Deluge Valve

FDV - DE0

The FDV is a Fire Protection control valve for Deluge fire sprinkler systems, designed for installations in hazardous environments.
The FDV-DE0 Deluge system is actuated electrically and resets locally.
An electric detection system activates a solenoid valve through a control panel to open the FDV deluge valve. The Deluge system incorporates an emergency valve, bypassing the fire detection systems for manual operation. Designed for vertical or horizontal installation, a globe pattern, line pressure operated FDV-DE0 valve features a direct elastomeric diaphragm Seal. It has no balancing spring or internal metallic wet components in the valve body. The hydrodynamic pattern design, ensures high flow rates with minimum head loss.

MARKETS

Commercial
Marine
Residential
Industry

TECHNICAL DATA

FLUID:
Water, Brackish water, Sea water, Foam

SIZE RANGE:
40mm to 250mm (1½" to 10")

AVAILABLE CONNECTIONS ENDS:
Flange*Flange, Groove*Groove,
Flange*Groove, Groove*Flange,
Thread*Thread

PRESSURE NOMINAL:
250 psi (17.2 bar)

APPROVALS

ADVANTAGES

- Only three parts: body, diaphragm & cover plate. No wet metal spring inside the control chamber
- Full bore unobstructed
- Simple manual reset of the valve to standby position without draining or opening the valve itself, neither closing OS&Y or other valves in the system
- Open fail safe valve, maintained in stand-by closed position
- Low maintenance cost: the valve is serviced in-line with only one replaceable part which is long life elastomeric diaphragm
- Conforms with inspection, testing and maintenance standard of water-based fire protection systems, NFPA 25

CHARACTERISTICS

- Hydro-dynamic pattern design ensures high flowrates with minimum head loss
- The valve trips open automatically upon a gradual release of water pressure from its control chamber. The trip is actuated by an electric signal transmitted to the valve's solenoid from the main control panel, due to a flame heat exposure of a sensors detection system
- Soft closing upon pressurization of the valve's control chamber, by line pressure or other independent water source, prevents surges

The FDV-DE0 resets to stand-by close position by pressurizing the Dry Pilot Line and manually operating the PSA device.

Schematic drawing

Set position

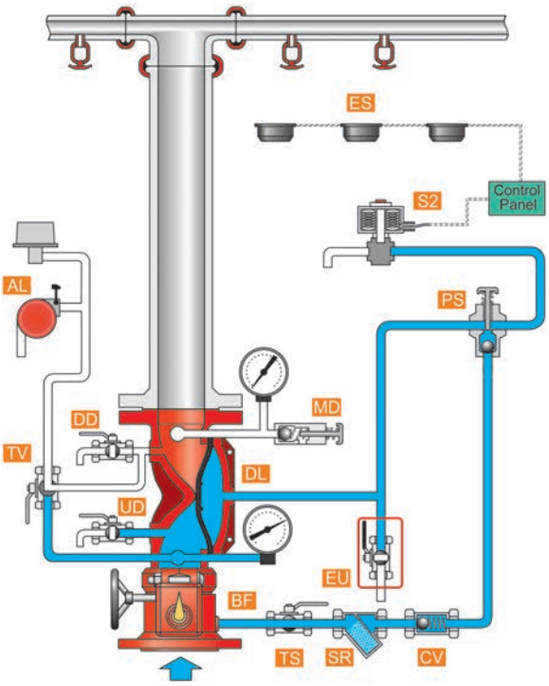

Fire position

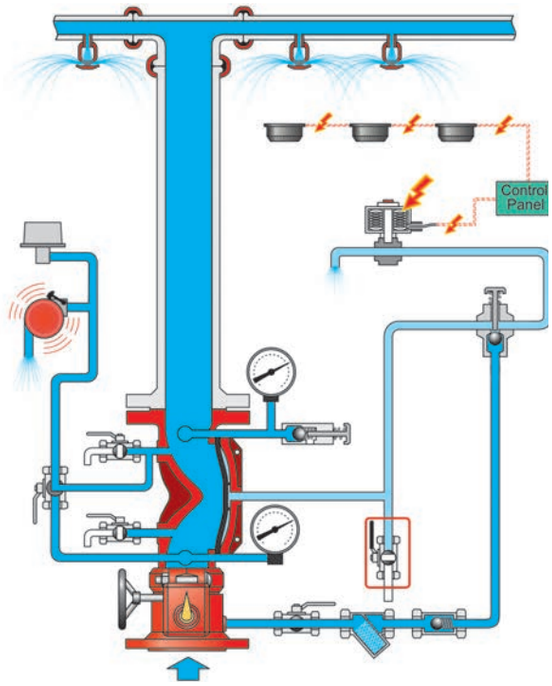

BF - Butterfly valve
DL - FDV Deluge valve
AL - Acoustic & Electric alarms
TS - Trim supply valve
SR - "Y" strainer
CV - Check valve
PS - PSA – Pressure Supply Arrestor
MD - MADV – Man/Auto Drain Valve
TV - Alarm test valve
EU - Emergency Manual Unit
S2 - Solenoid 2 way
ES - Electric Sensors

OPERATION

SET position

Pressurized water in the valve's control chamber (DL) is trapped by the closed PSA (PA), the closed 2 way solenoid valve (S2) and by the closed emergency valve (EU), maintaining the FDV deluge valve (DL) closed.

FIRE situation

When an electric detection system senses flame heat, it triggers the main control panel that in turn,transmits an electric signal, commanding the 2 way solenoid valve (S2) to open and drain the deluge valve's control chamber. The FDV Deluge valve opens and admits water to the spray sprinklers line.

RESET position

System reset requires the reset of the electrical alarm system to de-energize and close the solenoid valve, not allowing the FDV control chamber to drain. The PSA (PS) push button should be pressed to enable upstream pressure passage to close the FDV main valve.

FDV - DE0

Typical installation

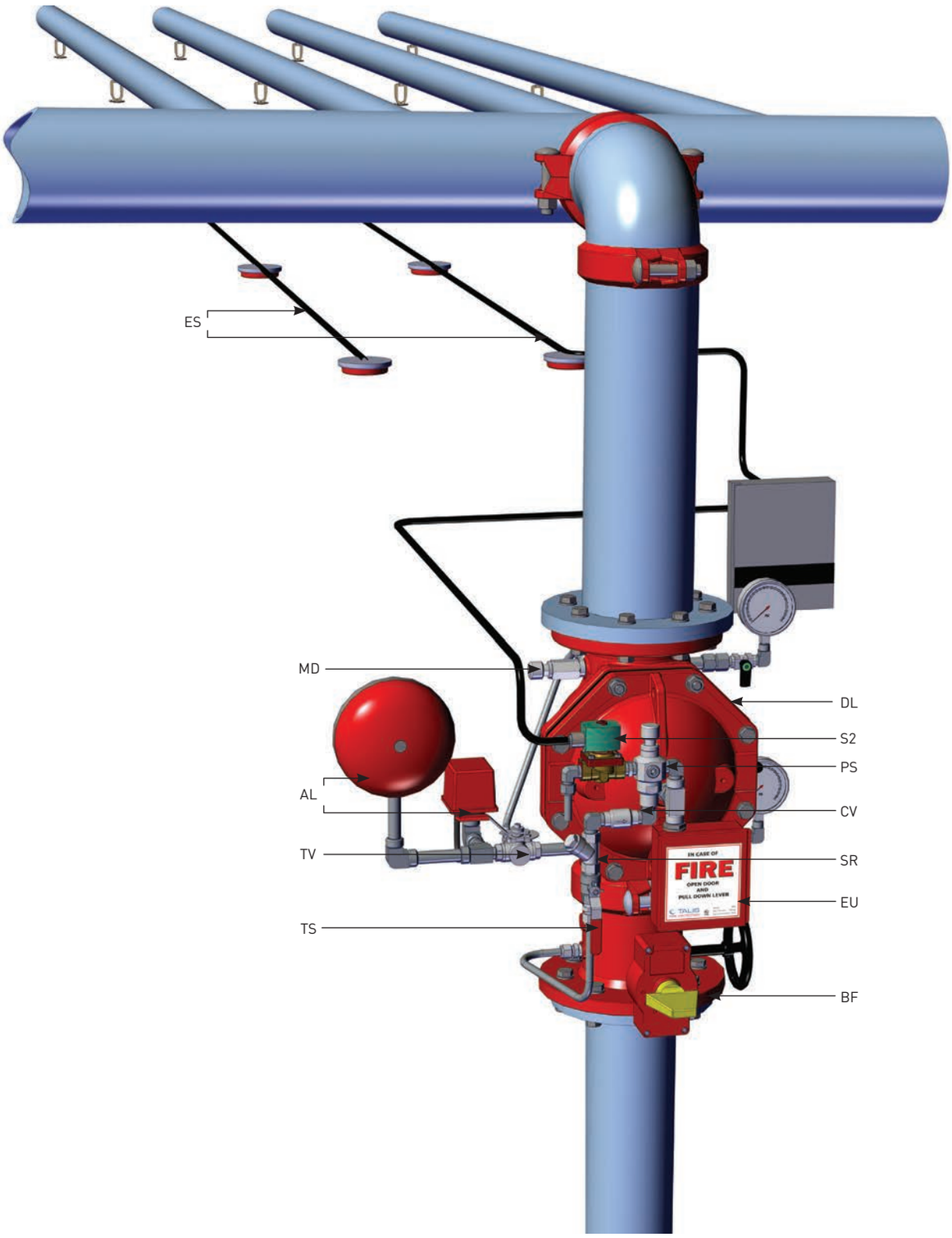

BF - Butterfly valve
DL - FDV Deluge valve
AL - Acoustic & Electric alarms
TS - Trim supply valve

SR - "Y" strainer
CV - Check valve
PS - PSA – Pressure Supply Arrestor
MD - MADV – Man/Auto Drain Valve

TV - Alarm test valve
EU - Emergency Manual Unit
S2 - Solenoid 2 way
ES - Electric Sensors

Dimensions Table

Vertical

Size	1 1/2" 2"		3"		4"		6"		8"	
	mm	Inch	mm	Inch	mm	Inch	mm	Inch	mm	Inch
A	172	6.8	265	10.4	280	11	304	11.9	335	13.2
B	244	9.6	230	9.0	245	9.7	267	10.5	294	11.6
C	26.4	1	84	3.3	73	2.9	69	2.7	63	2.5
D	224	8.82	325	12.8	400	15.8	462	18.2	580	11
E	128	5	76	2.9	41	1.6	12	0.5	-	-
F	168	6.6	178	7	209	8.2	237	9.3	265	10.4
G	170	6.7	200	7.8	240	9.5	302	11.9	342	13.4
Kg/lb	16.9	37.3	29.2	64.4	46	101.5	64.6	142.6	104	229.5

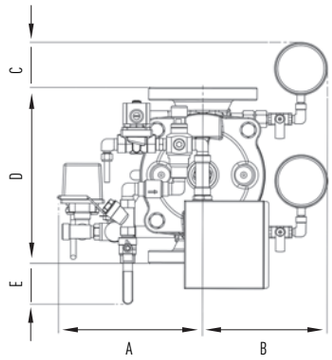

Horizontal

Size	1 1/2" 2"		3"		4"		6"		8"	
	mm	Inch	mm	Inch	mm	Inch	mm	Inch	mm	Inch
A	290	11.4	265	10.4	280	11	304	12	330	13
B	188	7.4	201	7.9	215	8.4	240	9.5	266	10.5
C	-	-	-	-	-	-	-	-	-	-
D	244	8.8	325	12.8	400	15.8	465	18.2	580	11
E	98	3.9	47	1.8	12	0.5	-	-	-	-
F	157	6.2	171	6.7	208	8.2	231	9	266	10.5
G	209	8.2	238	9.3	277	10.9	341	13.4	373	14.7
Kg/lb	16.7	36.8	29.2	64.4	45.8	101	64.6	142.6	104.2	229.7

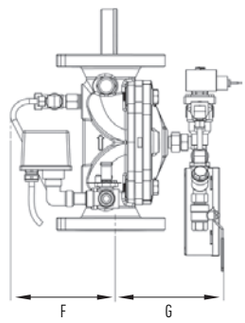

Factory Standard

MAIN VALVE:

BODY & COVER

- Ductile iron
- Cast Steel WCB
- Stainless Steel CF8
- Stainless Steel CF8M
- Nickel Aluminum Bronze

ELASTOMERS:

- NR, fabric reinforced Natural Rubber
- EPDM, fabric reinforced
- NBR, fabric reinforced Nitrile Rubber

COATING:

- Rilsan Polyamide based (Nylon 11)
- Polyester based EPC
- High built Epoxy FBE
- Vitreous Enamel (internal only)

TRIM

PIPING & TUBING:

- Stainless Steel 316
- Copper/Brass
- Cupro-Nickel
- Monel®

FITTINGS:

- Stainless Steel 316
- Brass
- Super Duplex
- Cupro-Nickel
- Monel®

ACCESSORIES:

- Brass Nickel plated
- Nickel Aluminium bronze
- Stainless steel CF8M
- Monel®
- Cupro-Nickel

PLEASE SPECIFY

- Working Media
- Ambiental conditions
- Min/Max operating flow
- Min/Max operating pressure
- Energize to Open/Close valve
- Solenoid Voltage
- Solenoid Enclosure
- Solenoid Protection
- Pneumatic working pressure
- System installation orientation
- Additional accessories needed

For more detailed technical information, please refer to chapter Engineering Data.

Deluge systems

Electric Actuated with Remote Reset Deluge Valve

FDV - DE1

The FDV is a Fire Protection control valve for Deluge fire sprinkler systems, designed for installations in hazardous environments.
The FDV-DE1 Deluge system is actuated electrically and resets remotely.
An electric detection systems activates a solenoid valve through a control panel to open the FDV deluge valve. The Deluge system incorporates an emergency valve, bypassing the fire detection systems for manual operation. Designed for vertical or horizontal installation, a globe pattern, line pressure operated FDV-DE1 valve features a direct elastomeric diaphragm seal. It has no balancing spring or internal metallic wet components in the valve body. The hydrodynamic pattern design, ensures high flow rates with minimum head loss.

MARKETS

Marine, Storage, P.O.G., Tunnels, Airports

TECHNICAL DATA

FLUID:
Water, Brackish water, Sea water, Foam

PNEUMATICS
Air, Nitrogen

SIZE RANGE:
40mm to 250mm (1½" to 10")

AVAILABLE CONNECTIONS ENDS:
Flange*Flange, Groove*Groove, Flange*Groove, Groove*Flange, Thread*Thread

PRESSURE NOMINAL:
250 psi (17.2 bar)

APPROVALS

ADVANTAGES

- Only three parts: body, diaphragm & cover plate, no wet metal spring inside the control chamber
- Full bore unobstructed
- Simple reset of the valve to standby position without draining or opening the valve itself, neither closing OS&Y or other valves in the system
- Open fail safe valve, maintained in stand-by closed position
- Low maintenance cost: the valve is serviced in-line and only one replaceable part which is long life elastomeric diaphragm
- Conforms with inspection, Testing and Maintenance Standard of water-based Fire Protection Systems, NFPA 25

CHARACTERISTICS

- Hydro-dynamic pattern design ensures high flow rates with minimum head loss
- The valve trips open automatically upon a gradual release of water pressure from its control chamber. The valve is actuated by an electric signal transmitted to the valve's solenoid from the main control panel, due to a flame heat exposure of a sensors detection system
- Soft closing upon pressurization of the valve's control chamber, by line pressure or other independent water source, prevents surges

The FDV-DE1 resets to stand-by close position by de-energizing the alarm system solenoid's coil through the main control panel.

Schematic drawing

Set position

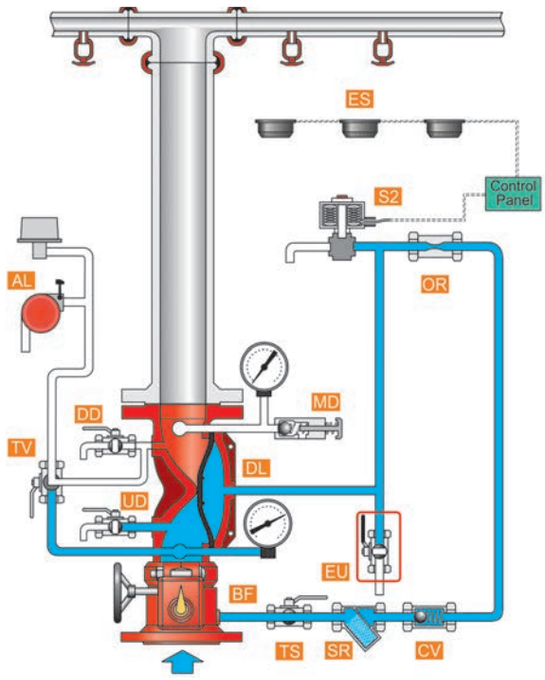

Fire position

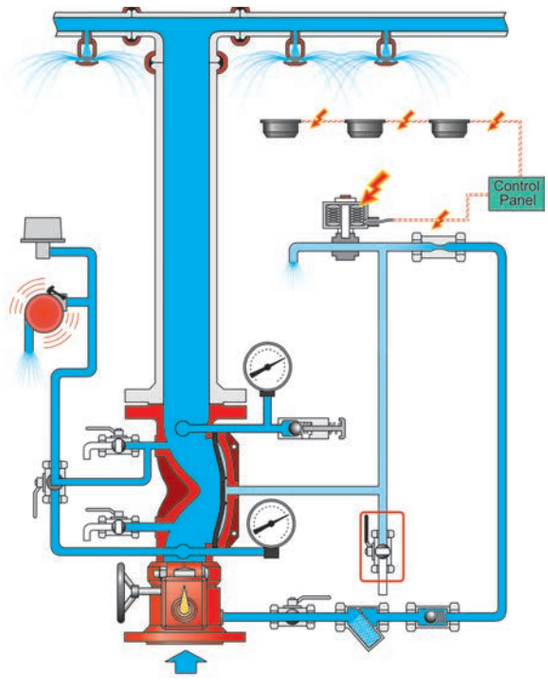

DL - FDV Deluge valve
UD - Upstream drain valve
DD - Downstream drain valve
AL - Acoustic & Electric alarms
TS - Trim supply valve
SR - "Y" strainer
CV - Check valve
OR - Orifice
MD - MADV – Manual Automatic Drain Valve
TV - Alarm test valve
EU - Emergency Manual Unit
S2 - Solenoid 3 way
ES - Electric Sensors system

OPERATION

SET position

Pressurized water in the valve's control chamber (DL) is trapped by check valve (CV), the closed 2 way solenoid valve (S2) and by the closed emergency valve (EU), maintaining the FDV deluge valve (DL) closed.

FIRE situation

When an electric detection system senses flame heat, it triggers the main control panel that in turn, transmits an electric signal commanding the 2 way solenoid valve (S2) to open and drain the deluge valve's control chamber. The FDV Deluge valve opens and admits water to the spray sprinklers line.

RESET position

System reset requires the reset of the electrical alarm system to de-energize and close the solenoid valve not allowing the FDV control chamber to drain. Upstream water ingresses the FDV Deluge control chamber through the orifice (OR), and the valve closes.

FDV - DE1

Typical installation

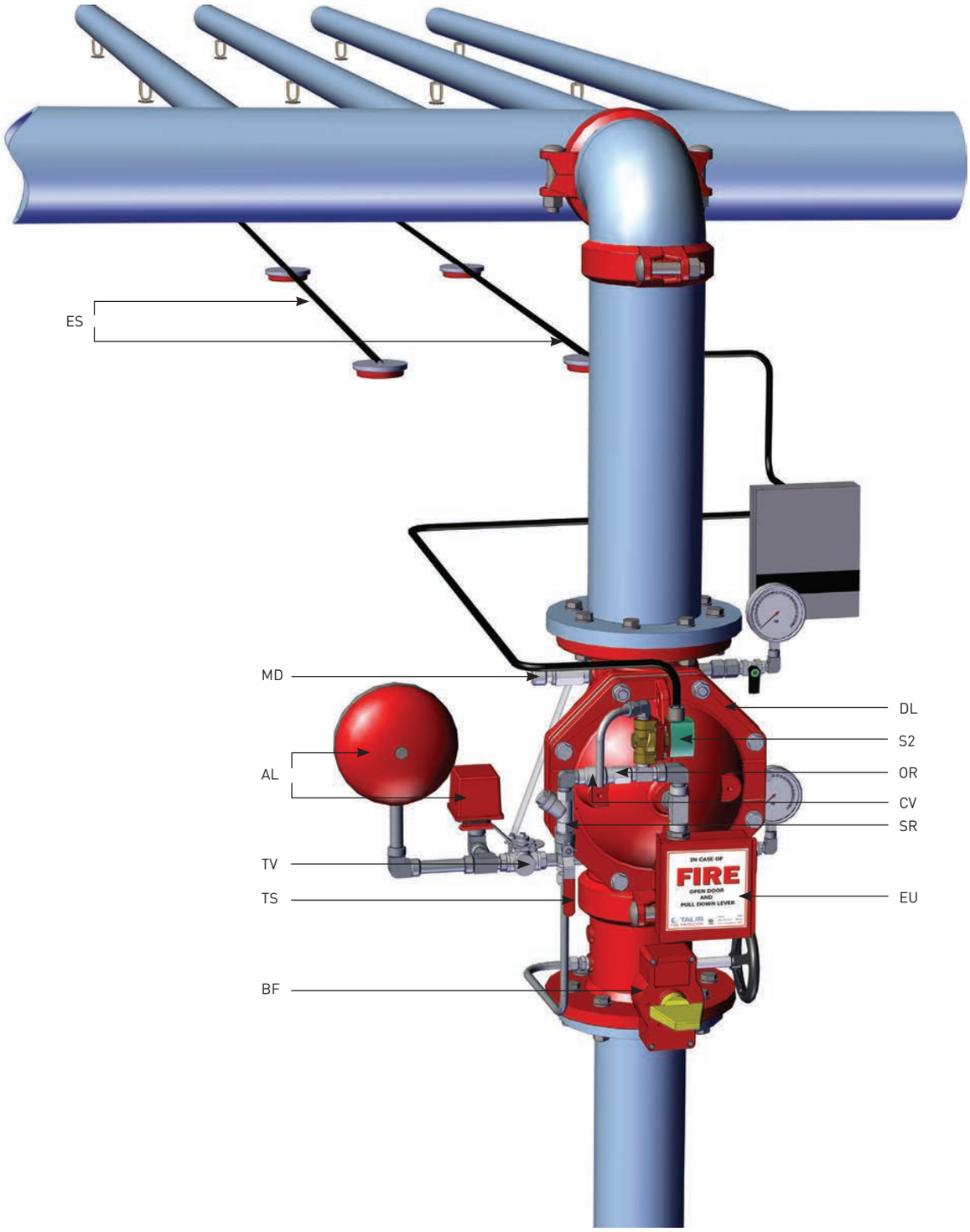

DL - FDV Deluge valve
UD - Upstream drain valve
DD - Downstream drain valve
AL - Acoustic & Electric alarms
TS - Trim supply valve

SR - "Y" strainer
CV - Check valve
OR - Orifice
MD -MADV – Manual Automatic Drain Valve

TV - Alarm test valve
EU - Emergency Manual Unit
S2 - Solenoid 3 way
ES - Electric Sensors system

Dimensions Table

Vertical

Size	1 1/2" 2"		3"		4"		6"		8"	
	mm	Inch	mm	Inch	mm	Inch	mm	Inch	mm	Inch
A	249	9.8	265	10.4	275	10.8	374	14.7	308	12
B	271	10.7	231	9	246	9.7	269	10.6	269	10.6
C	93	3.7	84	3.3	73	2.8	68	2.7	62	2.4
D	224	8.8	325	12.8	400	15.7	462	18.2	580	22.8
E	98	3.8	47	1.8	12	0.5	-	-	-	-
F	160	6.3	170	6.6	207	8	232	9	258	10
G	225	8.8	258	10	291	11	317	12.5	357	14
Kg/lb	16	35.2	28.3	62.4	45.2	99.6	64	141.1	103.8	228.8

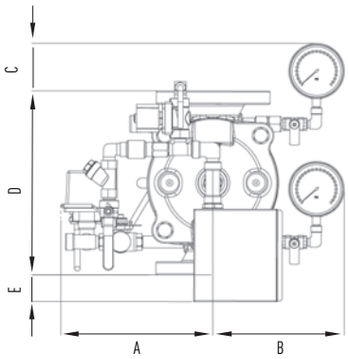

Horizontal

Size	1 1/2" 2"		3"		4"		6"		8"	
	mm	Inch	mm	Inch	mm	Inch	mm	Inch	mm	Inch
A	369	14.5	381	15	279	11	304	12	307	12
B	189	7.4	202	7.9	216	8.5	240	9.5	241	9.5
C	74	2.9	24	0.9	-	-	-	-	-	-
D	224	8.8	325	12.8	400	15.7	462	18	580	22.8
E	98	3.8	47	1.8	12	0.5	-	-	-	-
F	160	6.3	172	6.8	207	8	232	9	264	10.4
G	187	7.4	216	8.5	247	9.7	310	12.2	340	13.4
Kg/lb	16	35.2	28.4	62.6	45.2	99.6	64.3	141.7	103.8	228.8

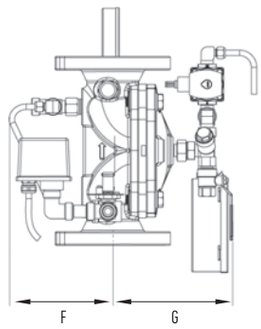

Factory Standard

MAIN VALVE:

BODY & COVER

- Ductile iron
- Cast Steel WCB
- Stainless Steel CF8
- Stainless Steel CF8M
- Nickel Aluminum Bronze

ELASTOMERS:

- NR, fabric reinforced Natural Rubber
- EPDM, fabric reinforced
- NBR, fabric reinforced Nitrile Rubber

COATING:

- Rilsan Polyamide based (Nylon 11)
- Polyester based EPC
- High built Epoxy FBE
- Vitreous Enamel (internal only)

TRIM

PIPING & TUBING:

- Stainless Steel 316
- Copper/Brass
- Cupro-Nickel
- Monel®

FITTINGS:

- Stainless Steel 316
- Brass
- Super Duplex
- Cupro-Nickel
- Monel®

ACCESSORIES:

- Brass Nickel plated
- Nickel Aluminium bronze
- Stainless steel CF8M
- Monel®
- Cupro-Nickel

PLEASE SPECIFY

- Working Media
- Ambiental conditions
- Min/Max operating flow
- Min/Max operating pressure
- Energize to Open/Close valve
- Solenoid Voltage
- Solenoid Enclosure
- Solenoid Protection
- Pneumatic working pressure
- System installation orientation
- Additional accessories needed

For more detailed technical information, please refer to chapter Engineering Data.

TALIS FP RANGE

Deluge Systems

Pneumatic Actuated with Local Reset Deluge Valve

FDV - DP0

The FDV is a Fire Protection control valve for Deluge fire sprinkler systems, designed for installations in hazardous environments.

The FDV-DP0 Deluge system is actuated pneumatically and resets locally.

When the pneumatic dry pilot detection line is exposed to flame heat, its automatic fire sprinklers shatter-open, while venting the air pressure from the FDV-DP0's actuator, commanding the deluge valve to open.

The Deluge system incorporates an emergency valve, bypassing the fire detection systems for manual operation. Designed for vertical or horizontal installation, a globe pattern, line pressure operated FDV-DP0 valve features a direct elastomeric diaphragm seal. It has no balancing spring or internal metallic wet components in the valve body. The hydrodynamic pattern design, ensures high flow rates with minimum head loss.

MARKETS

Commercial, Marine, Residential, P.O.G., Industry

TECHNICAL DATA

FLUID:
Water, Brackish water, Sea water, Foam

SIZE RANGE:
40mm to 250mm (1½" to 10")

AVAILABLE CONNECTIONS ENDS:
Flange*Flange, Groove*Groove, Flange*Groove, Groove*Flange, Thread*Thread

PRESSURE NOMINAL:
250 psi (17.2 bar)

APPROVALS

ADVANTAGES

- Only three parts: body, diaphragm & cover plate. No wet metal spring inside the control chamber
- Full bore unobstructed
- Simple manual reset of the valve to standby position without draining or opening the valve itself, neither closing OS&Y or other valves in the system
- Open fail safe valve, maintained in stand-by closed position
- Low maintenance cost: the valve is serviced in-line with only one replaceable part which is long life elastomeric diaphragm
- Conforms with inspection, testing and maintenance standard of water-based fire protection systems, NFPA 25

CHARACTERISTICS

- Hydro-dynamic pattern design ensures high flow rates with minimum head loss
- The valve trips open automatically upon a gradual release of water pressure from its control chamber. The trip is actuated by Dry Pilot Line's pneumatic pressure release due to its exposure to flame heat
- Soft closing upon pressurization of the valve's control chamber, by line pressure or other independent water source, prevents surges

The FDV-DP0 resets to stand-by close position by pressurizing the Dry Pilot Line and manually operating the PSA device.

Schematic drawing

Set position

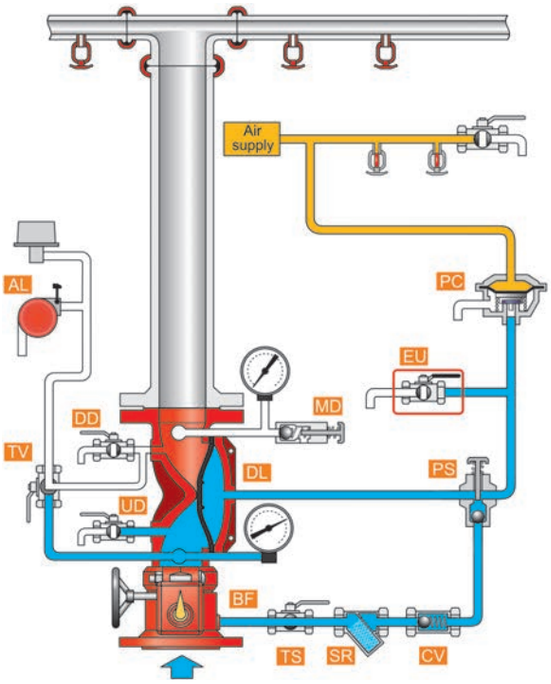

Fire position

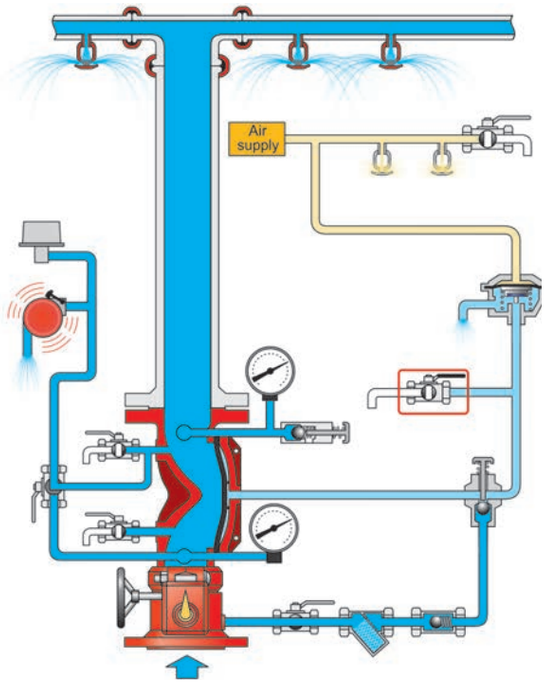

BF - Butterfly valve
DL - FDV Deluge valve
AL - Acoustic & Electric alarms
TS - Trim supply valve
SR - "Y" strainer
CV - Check valve
PS - PSA – Pressure Supply Arrestor
MD - MADV – Man/Auto Drain Valve
TV - Alarm test valve
EU - Emergency Manual Unit
PC - PA-PTC – Pneumatic Actuator-Pressure to Close

OPERATION

SET position

Pressurized water in the valve's control chamber (DL) is trapped by the closed PSA (PA), the closed PA-PTC actuator (PC) and by the closed emergency valve (EU), maintaining the FDV Deluge valve (DL) closed.

FIRE situation

When some of the Dry Pilot detection line's automatic fire sprinklers are subjected to flames heat and shatter-open, the pilot detection line depressurizes the PA-PTC control chamber. The PA-PTC (PC) opens and drains the deluge valve's control chamber.
The FDV deluge valve opens and admits water to the spray sprinklers line.

RESET position

System reset requires the replacement of all the Dry Pilot detection Line's shattered-open automatic fire sprinklers.
The detection line is then pressurizing together with the PA-PTC actuator, to reset it to closed position.
The PSA (PS) push button should be pressed to enable the control chamber filling, closing the FDV deluge valve.

FDV - DP0

Typical installation

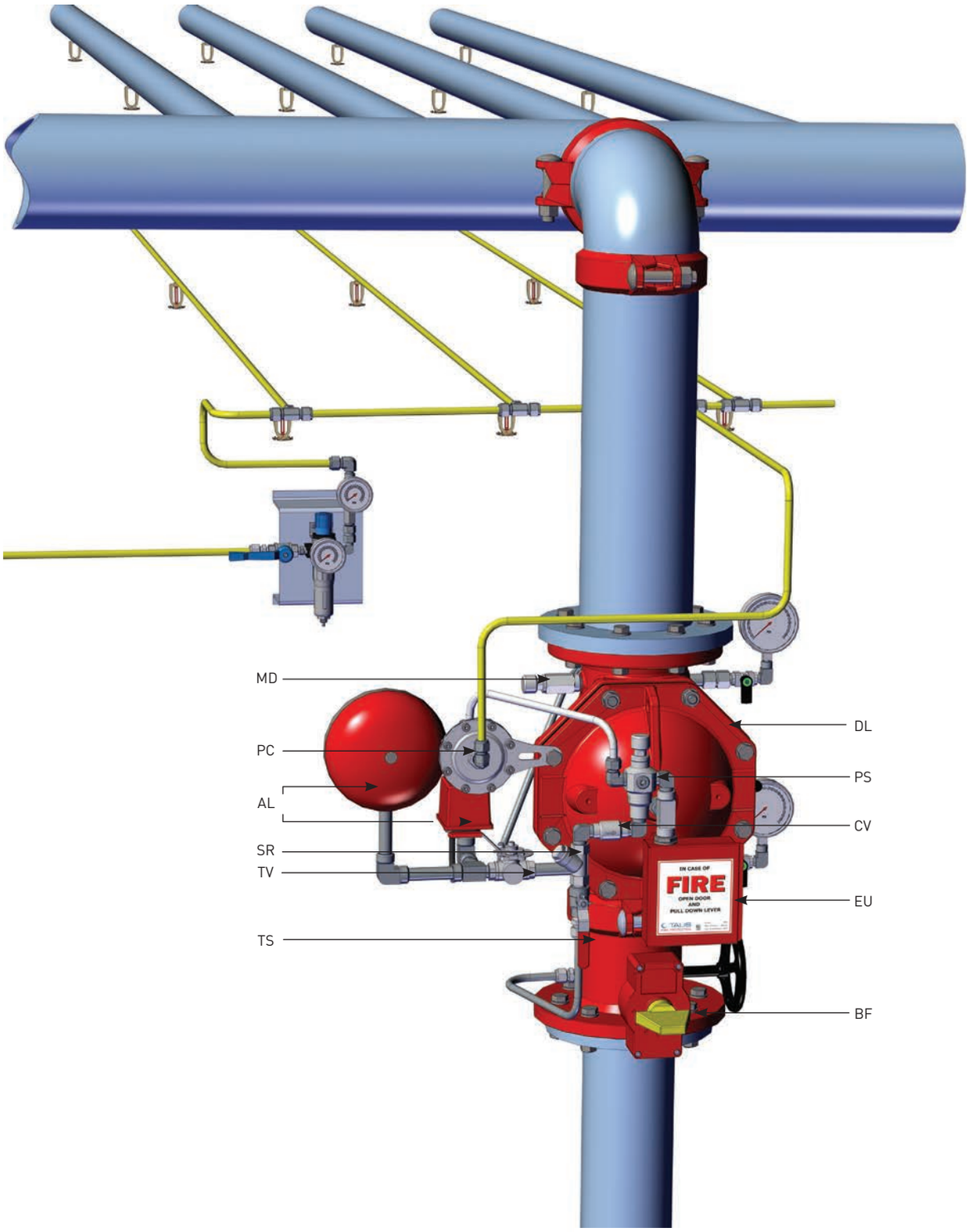

BF - Butterfly valve
DL - FDV Deluge valve
AL - Acoustic & Electric alarms
TS - Trim supply valve

SR - "Y" strainer
CV - Check valve
PS - PSA – Pressure Supply Arrestor
MD - MADV – Man/Auto Drain Valve

TV - Alarm test valve
EU - Emergency Manual Unit
PC - PA-PTC – Pneumatic Actuator-Pressure to Close

Dimensions Table

Vertical

Size	1 1/2" 2"		3"		4"		6"		8"	
	mm	Inch	mm	Inch	mm	Inch	mm	Inch	mm	Inch
A	314	12.4	384	15.2	395	15.5	300	11.8	327	12.9
B	268	10.5	231	9	244	9.6	220	0.8	296	11.7
C	94	3.7	84	3.3	73	2.9	63	2.5	61	2.4
D	224	8.8	325	12.8	400	15.8	462	18.2	580	22.8
E	117	4.6	66	2.6	40	1.6	-	-	-	-
F	164	6.5	180	7	206	8.1	230	9	254	10
G	170	6.7	200	7.9	240	9.5	302	11.9	335	13.2
Kg/lb	18.5	40.7	30.8	68	47.7	105.2	66.2	146	105.8	233.3

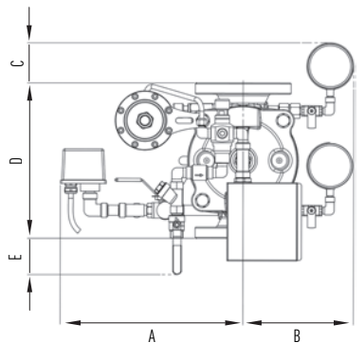

Horizontal

Size	1 1/2" 2"		3"		4"		6"		8"	
	mm	Inch	mm	Inch	mm	Inch	mm	Inch	mm	Inch
A	314	12.4	381	15	395	15.6	420	16.5	398	15.7
B	189	7.4	201	7.9	215	8.5	240	9.5	268	10.5
C	-	-	31	1.2	-	-	-	-	-	-
D	224	8.8	325	12.8	400	15.8	462	18.2	580	228
E	127	5	47	1.9	13	0.5	-	-	-	-
F	164	6.5	180	7	207	8.5	231	9	257	10.2
G	209	8.2	239	9.4	278	10.9	341	13.4	374	14.7
Kg/lb	19	42	30.8	68	47.7	105.2	66.4	146.5	105.7	223.2

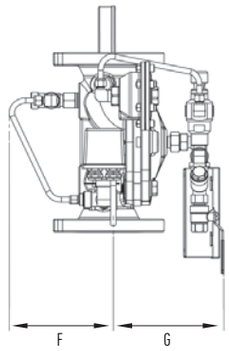

Factory Standard

MAIN VALVE:

BODY & COVER

- Ductile iron
- Cast Steel WCB
- Stainless Steel CF8
- Stainless Steel CF8M
- Nickel Aluminum Bronze

ELASTOMERS:

- NR, fabric reinforced Natural Rubber
- EPDM, fabric reinforced
- NBR, fabric reinforced Nitrile Rubber

COATING:

- Rilsan Polyamide based (Nylon 11)
- Polyester based EPC
- High built Epoxy FBE
- Vitreous Enamel (internal only)

TRIM

PIPING & TUBING:

- Stainless Steel 316
- Copper/Brass
- Cupro-Nickel
- Monel®

FITTINGS:

- Stainless Steel 316
- Brass
- Super Duplex
- Cupro-Nickel
- Monel®

ACCESSORIES:

- Brass Nickel plated
- Nickel Aluminium bronze
- Stainless steel CF8M
- Monel®
- Cupro-Nickel

PLEASE SPECIFY

- Working Media
- Ambiental conditions
- Min/Max operating flow
- Min/Max operating pressure
- Energize to Open/Close valve
- Pneumatic working pressure
- System installation orientation
- Additional accessories needed

For more detailed technical information, please refer to chapter Engineering Data.

TALIS FP RANGE

Deluge systems

Pneumatic Actuated with Remote Reset Deluge Valve

FDV - DP1

The FDV is a Fire Protection control valve for Deluge fire sprinkler systems, designed for installations in hazardous environments.
The FDV-DP1 Deluge system is actuated pneumatically and resets remotely.
When the pneumatic dry pilot detection line is exposed to flame heat, its automatic fire sprinklers shatter-open, venting the air pressure from the FDV-DP1's actuator, commanding the deluge valve to open. The Deluge system incorporates an emergency valve, bypassing the fire detection systems for manual operation.
Designed for vertical or horizontal installation, a globe pattern, line pressure operated FDV-DP1 valve features a direct elastomeric diaphragm seal. It has no balancing spring or internal metallic wet components in the valve body. The hydrodynamic pattern design, ensures high flow rates with minimum head loss.

MARKETS

Industry, Marine, Storage, P.O.G., Tunnels, Airports

TECHNICAL DATA

FLUID:
Water, Brackish water, Sea water, Foam

PNEUMATICS:
Air, Nitrogen

SIZE RANGE:
40mm to 250mm (1½" to 10")

AVAILABLE CONNECTIONS ENDS:
Flange*Flange, Groove*Groove, Flange*Groove, Groove*Flange, Thread*Thread

PRESSURE NOMINAL:
250 psi (17.2 bar)

APPROVALS

ADVANTAGES

- Only three parts: body, diaphragm & cover plate, no wet metal spring inside the control chamber
- Full bore unobstructed
- Simple reset of the valve to standby position without draining or opening the valve itself, neither closing OS&Y or other valves in the system
- Open fail safe valve, maintained in stand-by closed position
- Low maintenance cost: the valve is serviced in-line and only one replaceable part which is long life elastomeric diaphragm
- Conforms with inspection, Testing and Maintenance Standard of water-based Fire Protection Systems, NFPA 25

CHARACTERISTICS

- Hydro-dynamic pattern design ensures high flow rates with minimum head loss
- The valve trips open automatically upon a gradual release of water pressure from its control chamber. The valve is actuated by a Dry Pilot Line's pneumatic pressure release due to its exposure to flame heat
- Soft closing upon pressurization of the valve's control chamber, by line pressure or other independent water source, prevents surges

The FDV-DP1 resets to stand-by close position by pressurizing the Dry Pilot.

Schematic drawing

Set position

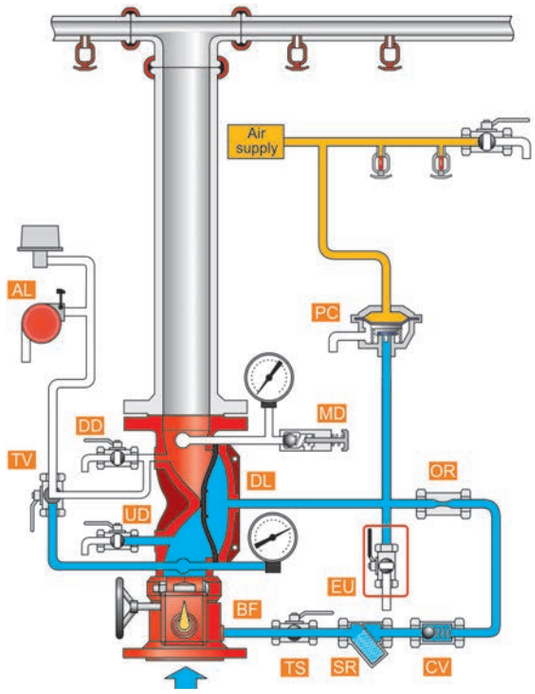

Fire position

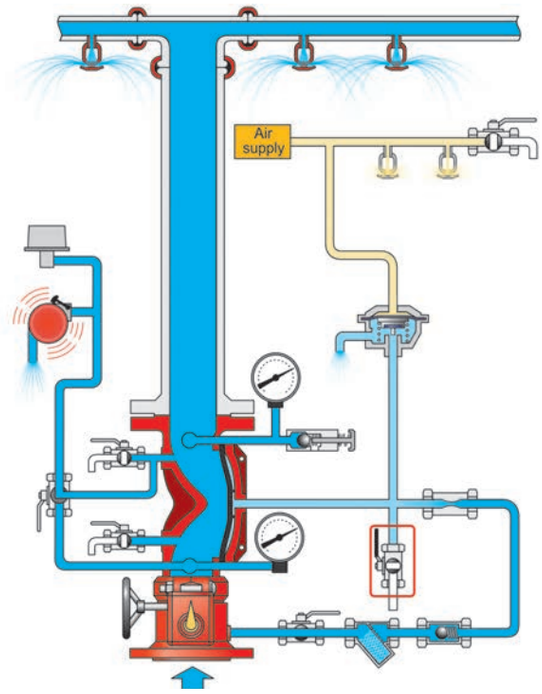

BF - Butterfly valve
DL - FDV Deluge valve
UD - Upstream drain valve
DD - Downstream drain valve

AL - Acoustic & Electric alarms
TS - Trim supply valve
SR - "Y" strainer
CV - Check valve

OR - Orifice
MD - MADV – Manual Automatic Drain Valve
TV - Alarm test valve
EU - Emergency Manual Unit

OPERATION

SET position

Pressurized water in the valve's control chamber (DL) is trapped by the check valve (CV), the closed emergency valve (EU) and by the closed automatic Wet Pilot Line sprinklers. The hydraulic pressure accumulated in the Wet pilot detection line maintains the FDV deluge valve (DL) closed.

FIRE situation

When the Wet pilot detection line's automatic fire sprinklers are subjected to flame heat and shatter-open, it enables the FDV control chamber to drain and de-pressurize, opening of the deluge valve and admitting water into the spray sprinkler system. The Deluge system incorporates an emergency valve, bypassing the fire detection system for manual operation.

RESET position

When the Wet pilot detection line's automatic fire sprinklers are subjected to flame heat and shatter-open, it enables the FDV control chamber to drain and de-pressurize, opening of the deluge valve and admitting water into the spray sprinkler system. The Deluge system incorporates an emergency valve, bypassing the fire detection system for manual operation.

FDV - DP1

Typical installation

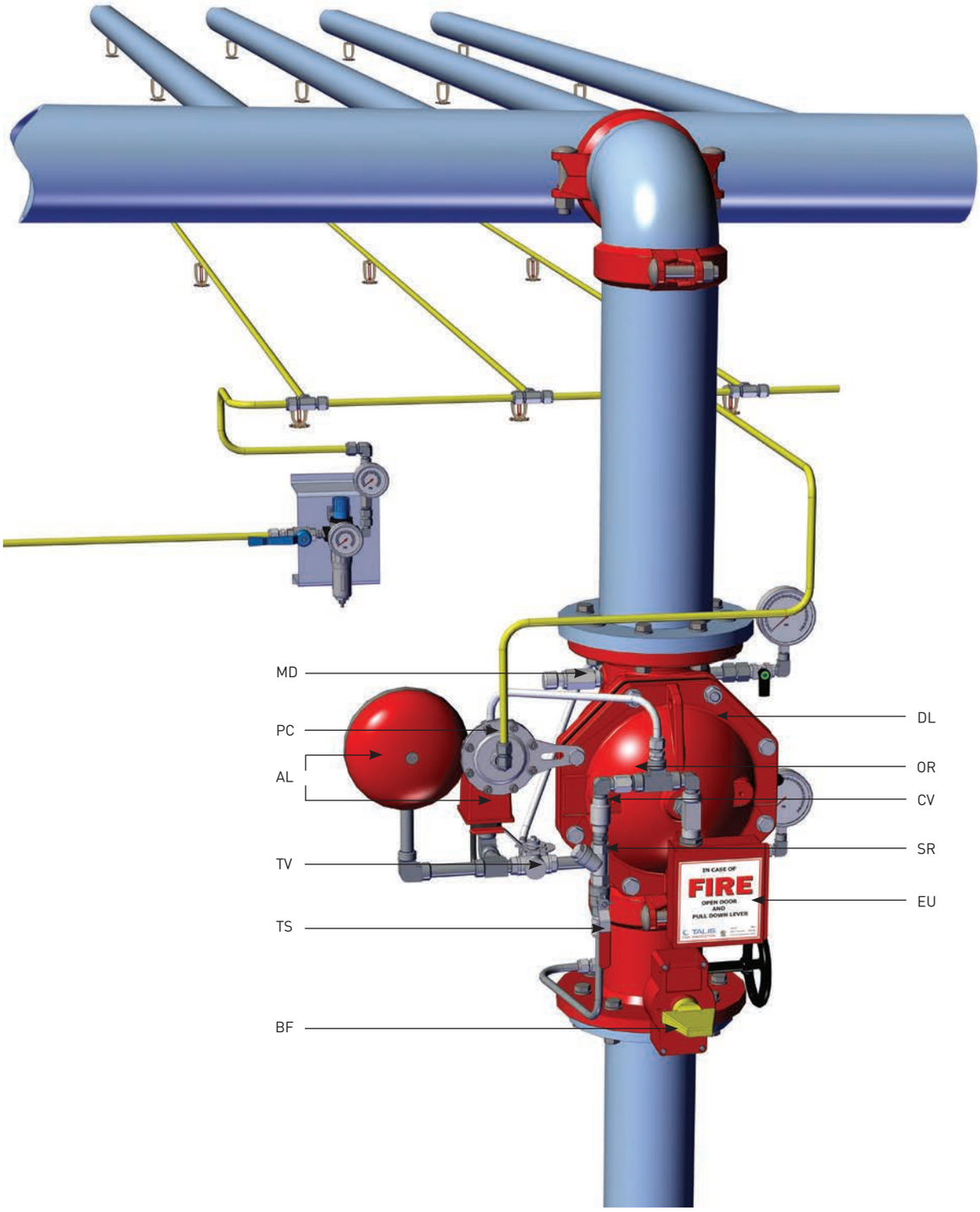

BF - Butterfly valve
DL - FDV Deluge valve
UD - Upstream drain valve
DD - Downstream drain valve

AL - Acoustic & Electric alarms
TS - Trim supply valve
SR - "Y" strainer
CV - Check valve

OR - Orifice
MD - MADV – Manual Automatic Drain Valve
TV - Alarm test valve
EU - Emergency Manual Unit

Dimensions Table

Vertical

Size	1 1/2" 2"		3"		4"		6"		8"	
	mm	Inch	mm	Inch	mm	Inch	mm	Inch	mm	Inch
A	315	12.4	381	15	395	15.5	420	16.5	403	15.9
B	189	7.4	202	7.9	216	8.5	240	9.4	262	10.3
C	-	-	-	-	-	-	-	-	-	-
D	224	8.8	325	12.8	400	15.7	462	18.2	580	22.8
E	154	6	69	2.7	34	1.4	4	0.1	-	-
F	154	6	172	6.8	206	8.1	232	9.1	264	10.4
G	187	7.4	216	8.5	247	9.7	311	12.2	340	13.4
Kg/lb	17.9	39.5	30.1	66.4	47	103.6	65.6	78.5	105.1	231.7

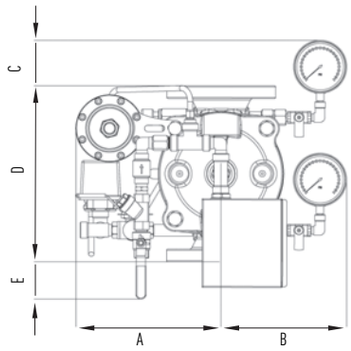

Horizontal

Size	1 1/2" 2"		3"		4"		6"		8"	
	mm	Inch	mm	Inch	mm	Inch	mm	Inch	mm	Inch
A	315	12.4	381	15	395	15.5	420	16.5	403	15.9
B	189	7.4	202	7.9	216	8.5	240	9.4	262	10.3
C	-	-	-	-	-	-	-	-	-	-
D	224	8.8	325	12.8	400	15.7	462	18.2	580	22.8
E	154	6	69	2.7	34	1.4	4	0.1	-	-
F	154	6	172	6.8	206	8.1	232	9.1	264	10.4
G	187	7.4	216	8.5	247	9.7	311	12.2	340	13.4
Kg/lb	17.8	39.2	30.2	66.6	47.2	104	65.8	145	105.1	231.7

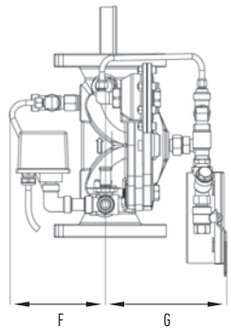

Factory Standard

MAIN VALVE:

BODY & COVER

- Ductile iron
- Cast Steel WCB
- Stainless Steel CF8
- Stainless Steel CF8M
- Nickel Aluminum Bronze

ELASTOMERS:

- NR, fabric reinforced Natural Rubber
- EPDM, fabric reinforced
- NBR, fabric reinforced Nitrile Rubber

COATING:

- Rilsan Polyamide based (Nylon 11)
- Polyester based EPC
- High built Epoxy FBE
- Vitreous Enamel (internal only)

TRIM

PIPING & TUBING:

- Stainless Steel 316
- Copper/Brass
- Cupro-Nickel
- Monel®

FITTINGS:

- Stainless Steel 316
- Brass
- Super Duplex
- Cupro-Nickel
- Monel®

ACCESSORIES:

- Brass Nickel plated
- Nickel Aluminium bronze
- Stainless steel CF8M
- Monel®
- Cupro-Nickel

PLEASE SPECIFY

- Working Media
- Ambiental conditions
- Min/Max operating flow
- Min/Max operating pressure
- Energize to Open/Close valve
- Pneumatic working pressure
- System installation orientation
- Additional accessories needed

For more detailed technical information, please refer to chapter Engineering Data.

TALIS FP RANGE

Deluge systems

Electric-Pneumatic Actuated with Local Reset Deluge Valve

FDV - DC0

The FDV is a Fire Protection control valve for Deluge fire sprinkler systems, designed for installations in hazardous environments.
The FDV-DC0 Deluge system is actuated electrically or pneumatically and resets locally.
Two detection systems, can independently activate an actuator to open the deluge valve: a pneumatic Dry Pilot detection Line and/or an electric solenoid, connected to sensors through a control Panel. The Deluge system incorporates an emergency valve, bypassing the fire detection systems for manual operation.
Designed for vertical or horizontal installation, a globe pattern, line pressure operated FDV-DC0 valve features a direct elastomeric diaphragm seal. It has no balancing spring or internal metallic wet components in the valve body. The hydrodynamic pattern design, ensures high flow rates with minimum head loss.

MARKETS

Commercial, Industry, Storage, P.O.G.

TECHNICAL DATA

FLUID:
Water, Brackish water, Sea water, Foam

PNEUMATICS
Air, Nitrogen

SIZE RANGE:
40mm to 250mm (1½" to 10")

AVAILABLE CONNECTIONS ENDS:
Flange*Flange, Groove*Groove, Flange*Groove, Groove*Flange, Thread*Thread

PRESSURE NOMINAL:
250 psi (17.2 bar)

APPROVALS

ADVANTAGES

- Only three parts: body, diaphragm & cover plate, no wet metal spring inside the control chamber
- Full bore unobstructed
- Simple manual reset of the valve to standby position without draining or opening the valve itself, neither closing service valves in the system
- Open fail safe valve, maintained in stand-by closed position
- Low maintenance cost: the main valve is serviced in-line and only one replaceable part which is long life elastomeric diaphragm

Conforms with inspection, Testing and Maintenance Standard of water-based Fire Protection Systems, NFPA 25

CHARACTERISTICS

- Hydro-dynamic pattern design ensures high flowrates with minimum head loss
- The valve trips open automatically upon a gradual release of water pressure from its control chamber. The valve is actuated by an electric signal conveyed to the valve's solenoid or by Dry Pilot Line's pneumatic pressure release due to its exposure to flame heat
- Soft closing upon pressurization of the valve's control chamber, by line pressure or other independent water source, prevents surges

The FDV-DC0 resets to stand-by close position by de-energizing the alarm system solenoid's coil through the main control panel or, pressurizing the Dry Pilot Line and manually operating the PSA device.

Schematic drawing

Set position

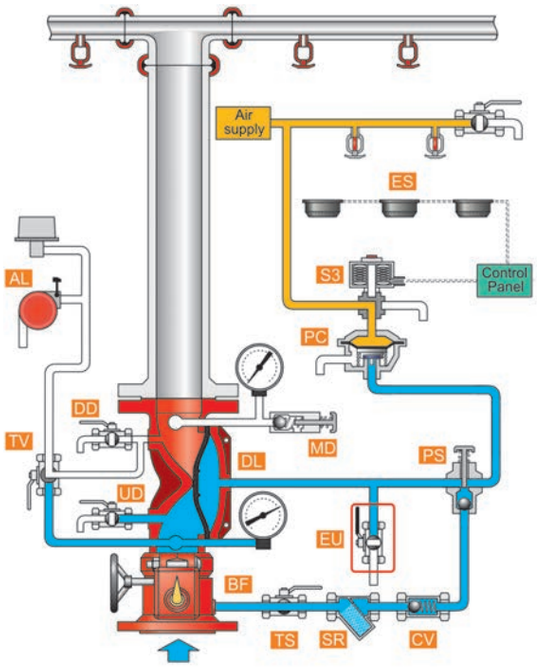

Fire position

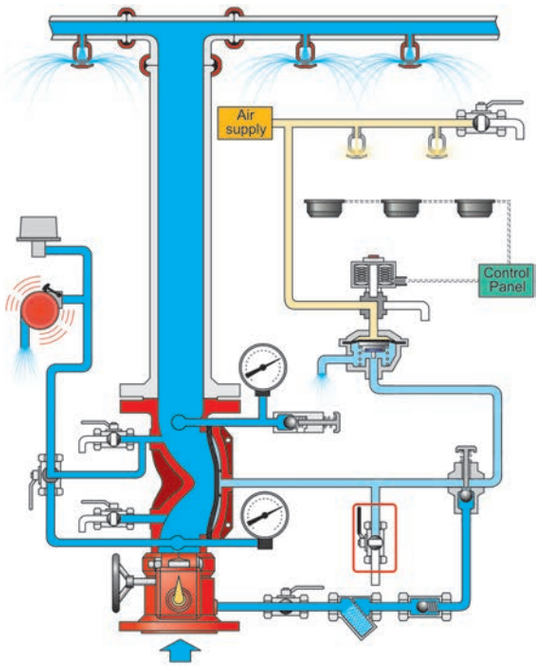

DL - FDV Deluge valve
UD - Upstream drain valve
DD - Downstream drain valve
AL - Acoustic & Electric alarms
TS - FDV Deluge valve
SR - "Y" strainer
CV - Check valve

PS - PSA – Pressure Supply Arrestor
MD - MADV – Manual Automatic Drain Valve
TV - Alarm test valve
EU - Emergency Manual Unit
PC - PA-PTC – Pneumatic Actuator-Pressure to Close
S3 - Solenoid 3 way

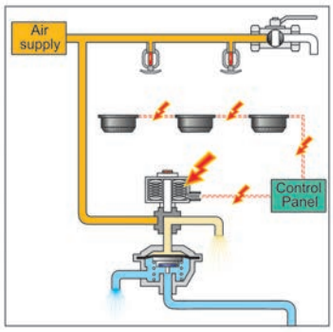

OPERATION

SET position

Pressurized water in the valve's control chamber is trapped by the check-valve (5), by the closed PA-PTC actuator (9) and by the closed emergency valve (8), maintaining the deluge valve in its closed position.
The air pressure accumulated in the Dry pilot Detection line is conveyed to the PA-PTC actuator, through a 3 way solenoid valve, maintaining the Deluge valve closed.

FIRE situation

When some of the Wet pilot detection line's automatic fire sprinklers are subjected to the predetermined temperature levels and shutter-open, the pilot line de-pressurizes, tripping open the PA-PTC. Alternatively, an electric detection system senses heat and triggers the main control board that in turn, energizes the 3 way solenoid valve.
The solenoid valve bypasses the Dry pilot detection line depressurizing the PA-PTC. The FDV-DC0's control chamber is then drains and the Deluge valve opens.

RESET position

System reset requires the replacement of all Shattered-open Fire sprinklers in the Detection pilot line. Alternatively, the electrical alarm system has to be reset and the solenoid de-energized. Resetting both Detection line and solenoid valve, the PA-PTC actuator pressurizes and closes the FDV deluge valve.

FDV - DC0

Typical installation

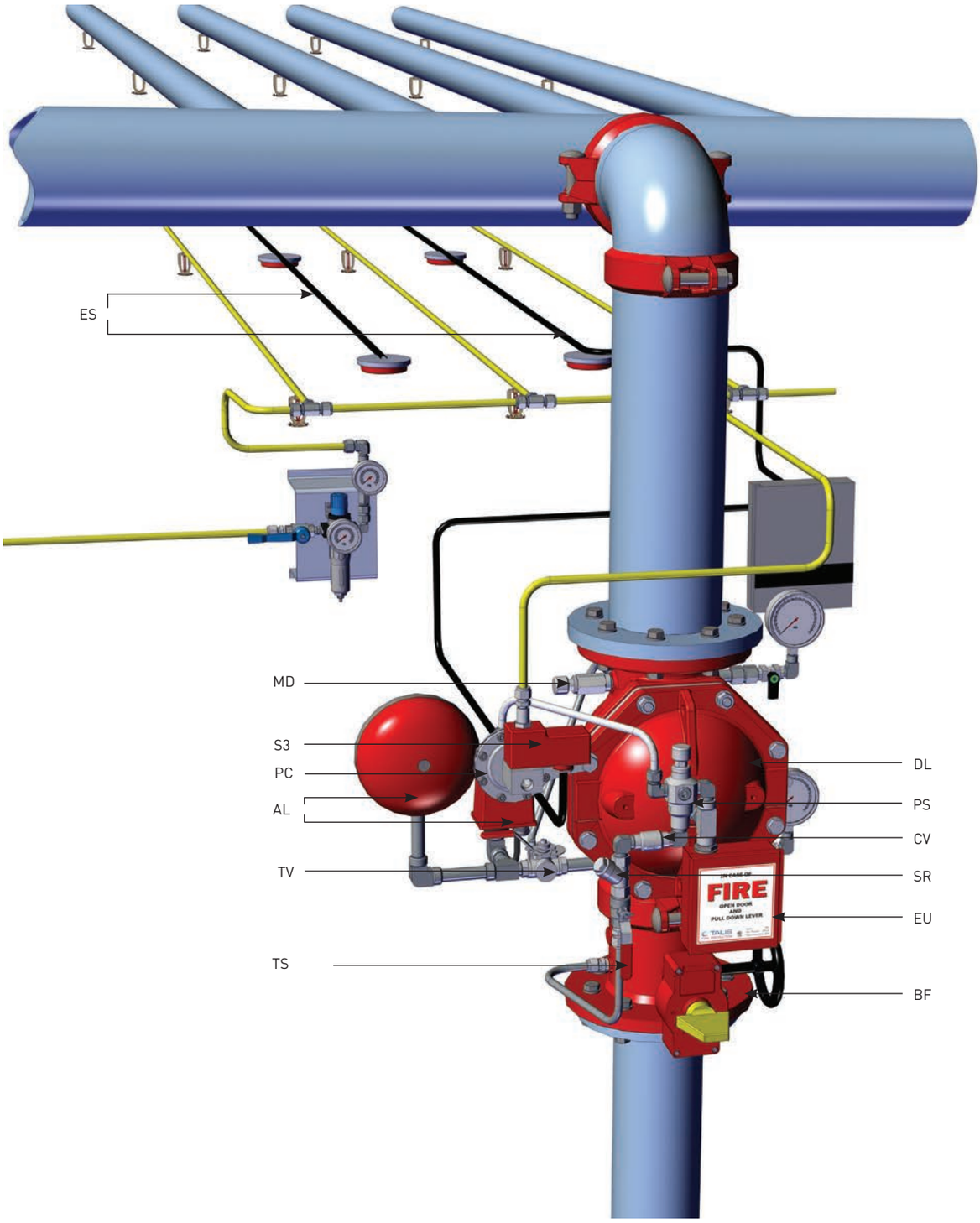

DL - FDV Deluge valve
UD - Upstream drain valve
DD - Downstream drain valve
AL - Acoustic & Electric alarms
TS - FDV Deluge valve

SR - "Y" strainer
CV - Check valve
PS - PSA – Pressure Supply Arrestor
MD - MADV – Manual Automatic Drain Valve

TV - Alarm test valve
EU - Emergency Manual Unit
PC - PA-PTC – Pneumatic Actuator-Pressure to Close
S3 - Solenoid 3 way

Dimensions Table

Vertical

Size	1 1/2" 2"		3"		4"		6"		8"	
	mm	Inch	mm	Inch	mm	Inch	mm	Inch	mm	Inch
A	235	9.25	327	12.87	280	11	340	13.4	253	9.96
B	268	10.55	231	9	246	9.7	270	10.6	296	11.6
C	94	3.7	84	3.31	73	2.87	70	2.76	63	2.5
D	24	8.8	325	12.8	400	15.75	462	18.2	580	22.8
E	128	5	76	3	41	1.6	12	0.47	-	-
F	169	6.65	172	6.77	208	8.2	232	9.13	255	10
G	227	8.94	216	8.5	240	9.45	302	11.9	336	13.23
Kg/lb	19.9	44	32	70.7	49	108	67.6	149.2	107	236

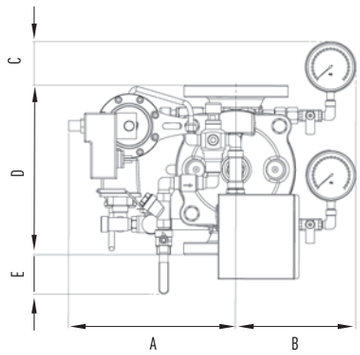

Horizontal

Size	1 1/2" 2"		3"		4"		6"		8"	
	mm	Inch	mm	Inch	mm	Inch	mm	Inch	mm	Inch
A	314	12.6	381	15	395	15.5	415	16.3	438	17.24
B	190	7.48	201	7.9	217	8.54	240	9.45	266	10.47
C	95	3.7	23.5	0.93	-	-	-	-	-	-
D	224	8.82	325	12.8	400	15.75	462	18.2	580	11
E	99.6	3.92	47	1.85	12	0.47	-	-	-	-
F	164	6.46	194	7.6	208	8.2	252	9.9	256	10.08
G	250	9.8	231	9	313	12.3	341	13.4	409	16.1
Kg/lb	20.5	45.2	32.1	70.9	49	108	67.7	149.2	107	236

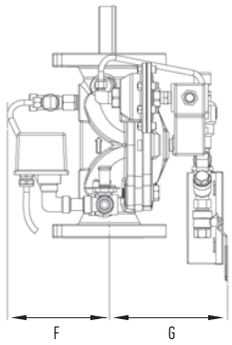

Factory Standard

MAIN VALVE:

BODY & COVER

- Ductile iron
- Cast Steel WCB
- Stainless Steel CF8
- Stainless Steel CF8M
- Nickel Aluminum Bronze

ELASTOMERS:

- NR, fabric reinforced Natural Rubber
- EPDM, fabric reinforced
- NBR, fabric reinforced Nitrile Rubber

COATING:

- Rilsan Polyamide based (Nylon 11)
- Polyester based EPC
- High built Epoxy FBE
- Vitreous Enamel (internal only)

TRIM

PIPING & TUBING:

- Stainless Steel 316
- Copper/Brass
- Cupro-Nickel
- Monel®

FITTINGS:

- Stainless Steel 316
- Brass
- Super Duplex
- Cupro-Nickel
- Monel®

ACCESSORIES:

- Brass Nickel plated
- Nickel Aluminium bronze
- Stainless steel CF8M
- Monel®
- Cupro-Nickel

PLEASE SPECIFY

- Working Media
- Ambiental conditions
- Min/Max operating flow
- Min/Max operating pressure
- Energize to Open/Close valve
- Solenoid Voltage
- Solenoid Enclosure
- Solenoid Protection
- Pneumatic working pressure
- System installation orientation
- Additional accessories needed

For more detailed technical information, please refer to chapter Engineering Data.

Deluge systems

Electric-Pneumatic Actuated with Remote Reset Deluge Valve

FDV - DC1

The FDV is a Fire Protection control valve for Deluge fire sprinkler systems, designed for installations in hazardous environments.

The FDV-DC1 Deluge system is actuated electrically or pneumatically and can be reset from a remote location. Two detection systems, can independently activate an actuator to open the deluge valve: a pneumatic Dry Pilot detection Line and/or an electric solenoid, connected to sensors through a control panel . The Deluge system incorporates an emergency valve, bypassing the fire detection systems for manual operation.

Designed for vertical or horizontal installation, a globe pattern, line pressure operated FDV-DC1 valve features a direct elastomeric diaphragm seal. It has no balancing spring or internal metallic wet components in the valve body. The hydrodynamic pattern design, ensures high flow rates with minimum head loss.

MARKETS

Industry, Marine, Storage, P.O.G., Airports

TECHNICAL DATA

FLUID:
Water, Brackish water, Sea water, Foam

PNEUMATICS
Air, Nitrogen

SIZE RANGE:
40mm to 250mm (1½" to 10")

AVAILABLE CONNECTIONS ENDS:
Flange*Flange, Groove*Groove, Flange*Groove, Groove*Flange, Thread*Thread

PRESSURE NOMINAL:
250 psi (17.2 bar)

APPROVALS

ADVANTAGES

- Only three parts: body, diaphragm & cover plate, no wet metal spring inside the control chamber
- Full bore unobstructed
- Simple reset of the valve to standby position without draining or opening the valve itself, neither closing OS&Y or other valves in the system
- Open fail safe valve, maintained in stand-by closed position
- Low maintenance cost: the valve is serviced in-line and only one replaceable part which is long life elastomeric diaphragm
- Conforms with inspection, Testing and Maintenance Standard of water-based Fire Protection Systems, NFPA 25

CHARACTERISTICS

- Hydro-dynamic pattern design ensures high flowrates with minimum head loss
- The valve trips open automatically upon a gradual release of water pressure from its control chamber. The valve is actuated by an electric signal conveyed to the valve's solenoid or by Dry Pilot Line's pneumatic pressure release due to its exposure to flame heat
- Soft closing upon pressurization of the valve's control chamber, by line pressure or other independent water source, prevents surges

The FDV-DC1 resets to stand-by close position by de-energizing the alarm system solenoid's coil through the main control panel or, pressurizing the Dry Pilot Line.

Schematic drawing

Set position

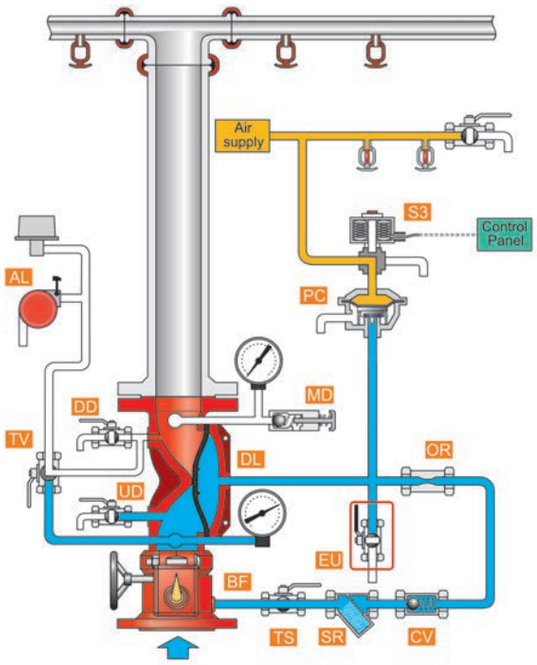

Fire position

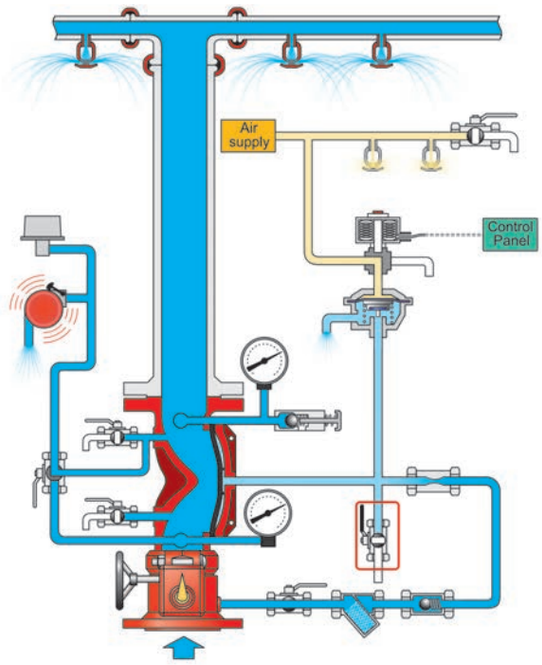

BF - Butterfly valve
DL - FDV Deluge valve
UD - Upstream drain valve
DD - Downstream drain valve
AL - Acoustic & Electric alarms
TS - Trim supply valve
SR - "Y" strainer
CV - Check valve

OR - Orifice
MD - MADV – Manual Automatic Drain Valve
TV - Alarm test valve
EU - Emergency Manual Unit
PC - PTC – Pneumatic Actuator-Pressure To Close
S3 - Solenoid 3 way

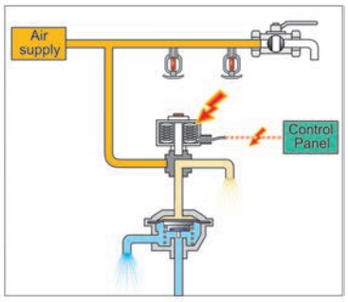

OPERATION

SET position

Pressurized water in the valve's control chamber (DL) is trapped by check valve (CV), the closed PA-PTC actuator (PC) and by the closed emergency valve (EU), maintaining the deluge valve in closed position. The air pressure accumulated in the Dry pilot Detection line is conveyed to the PA-PTC actuator, through a 3 way solenoid (S3) valve, maintaining the Deluge valve closed.

FIRE situation

When some of the Wet pilot detection line's automatic fire sprinklers are subjected to the predetermined temperature levels and shutter-open, the pilot line de-pressurizes, tripping open the PA-PTC. Alternatively, an electric detection system senses heat and triggers the main control board that in turn, energizes the 3 way solenoid valve. The solenoid valve bypasses the Dry pilot detection line depressurizing the PA-PTC. The FDV-DC0's control chamber is then drains and the Deluge valve opens.

RESET position

System reset requires the replacement of all shattered-open fire sprinklers in the Detection pilot line. Alternatively, the electrical alarm system has to be reset and the solenoid de-energized. By this, the PA-PTC actuator pressurizes and closes the FDV deluge valve's drain.Upstream water passing through the orifice (OR), pressurizes the FDV Deluge control chamber and the valve closes.

FDV - DC1

Typical installation

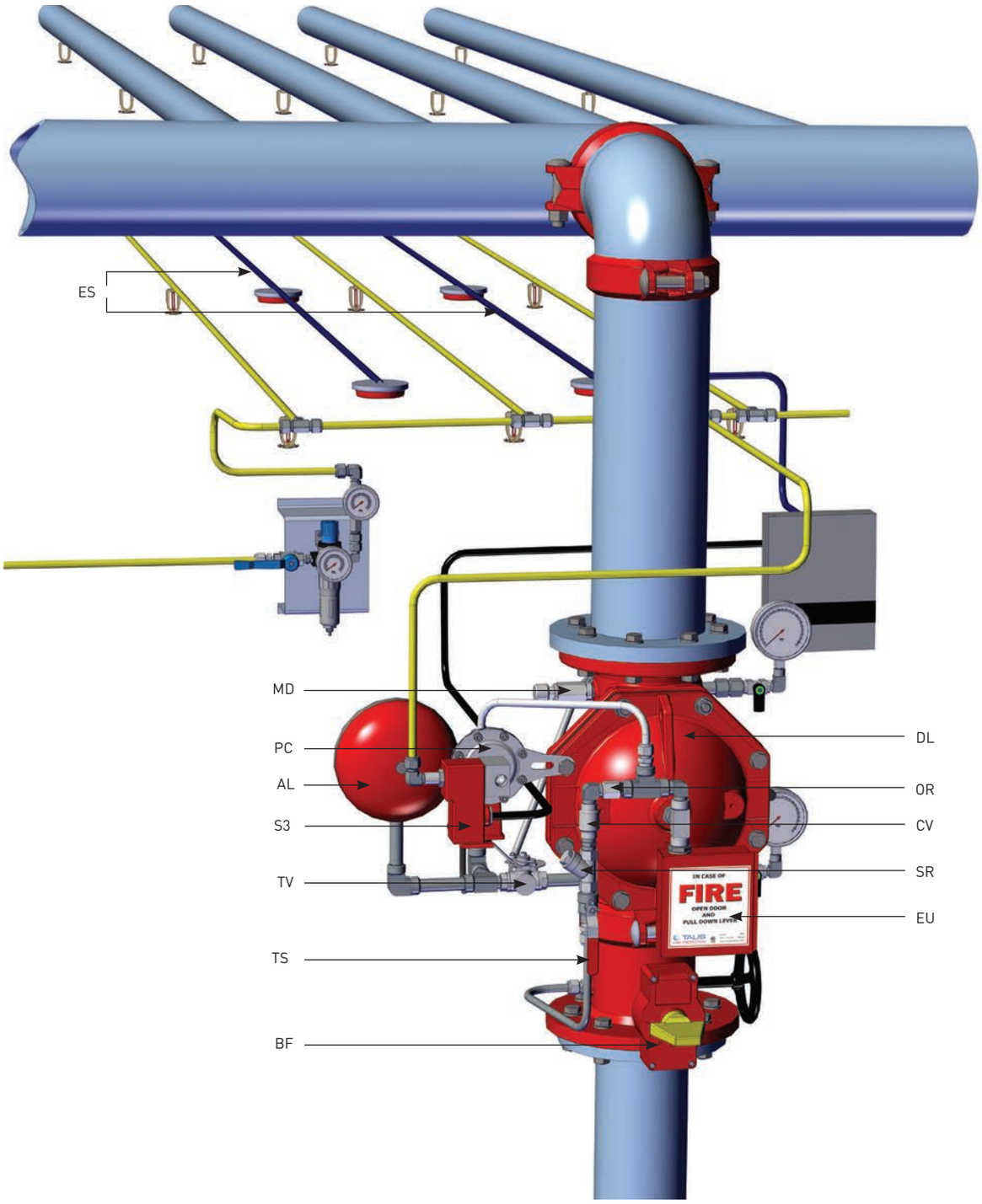

BF - Butterfly valve
DL - FDV Deluge valve
UD - Upstream drain valve
DD - Downstream drain valve
AL - Acoustic & Electric alarms
TS - Trim supply valve

SR - "Y" strainer
CV - Check valve
OR - Orifice
MD - MADV – Manual Automatic Drain Valve
TV - Alarm test valve

EU - Emergency Manual Unit
PC - PTC – Pneumatic Actuator-Pressure To Close
S3 - Solenoid 3 way

Dimensions Table

Vertical

Size	1 1/2" 2"		3"		4"		6"		8"	
	mm	Inch	mm	Inch	mm	Inch	mm	Inch	mm	Inch
A	214	8.4	321	12.6	367	14.5	394	15.5	432	17
B	277	10.9	231	9	246	9.7	269	10.6	269	10.6
C	94	3.7	85	3.3	73	2.9	68	2.7	61	2.4
D	224	8.8	325	12.8	400	15.7	462	18	580	22.8
E	154	6	68	2.7	34	1.3	4	0.1	-	-
F	159	6.2	166	6.5	207	8	248	9.7	259	10.2
G	259	10	216	8.5	247	9.7	311	12.2	341	13.4
Kg/lb	19.9	42.1	31.4	69.2	48.3	106.5	66.9	147.5	106.4	234.6

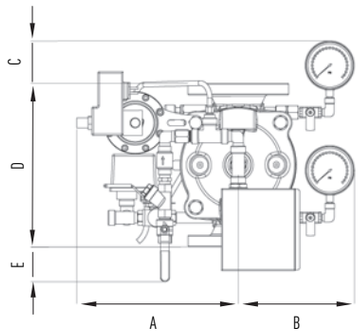

Horizontal

Size	1 1/2" 2"		3"		4"		6"		8"	
	mm	Inch	mm	Inch	mm	Inch	mm	Inch	mm	Inch
A	315	12.4	381	15	395	15.5	420	16.5	457	17.9
B	188	188	201	7.9	216	8.5	240	9.5	243	9.5
C	-	-	-	-	-	-	-	-	-	-
D	224	8.8	325	12.8	400	15.7	462	18	580	22.8
E	154	6	69	2.7	34	1.4	6	0.2	-	-
F	155	6.1	169	6.6	208	8	232	9	258	10
G	259	10	216	8.5	247	9.7	308	12	340	13.4
Kg/lb	19	41.9	31.5	69.5	48.4	106.7	67.1	147.1	106.5	234.8

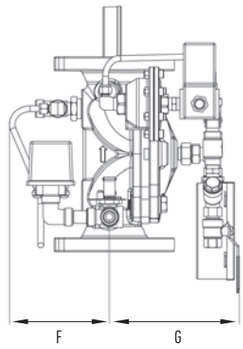

Factory Standard

MAIN VALVE:

BODY & COVER

- Ductile iron
- Cast Steel WCB
- Stainless Steel CF8
- Stainless Steel CF8M
- Nickel Aluminum Bronze

ELASTOMERS:

- NR, fabric reinforced Natural Rubber
- EPDM, fabric reinforced
- NBR, fabric reinforced Nitrile Rubber

COATING:

- Rilsan Polyamide based (Nylon 11)
- Polyester based EPC
- High built Epoxy FBE
- Vitreous Enamel (internal only)

TRIM

PIPING & TUBING:

- Stainless Steel 316
- Copper/Brass
- Cupro-Nickel
- Monel®

FITTINGS:

- Stainless Steel 316
- Brass
- Super Duplex
- Cupro-Nickel
- Monel®

ACCESSORIES:

- Brass Nickel plated
- Nickel Aluminium bronze
- Stainless steel CF8M
- Monel®
- Cupro-Nickel

PLEASE SPECIFY

- Working Media
- Ambiental conditions
- Min/Max operating flow
- Min/Max operating pressure
- Energize to Open/Close valve
- Wet Pilot's height
- Energize to Open/Close valve
- Solenoid Enclosure
- Solenoid Protection
- Pneumatic working pressure
- System installation orientation
- Additional accessories needed

For more detailed technical information, please refer to chapter Engineering Data.

TALIS FP RANGE

Deluge Systems

Hydraulic Actuated, Local reset Deluge Valve

FDV - DH0

The FDV is a Fire Protection control valve for Deluge fire sprinkler systems, designed for installations in hazardous environments.
The FDV-DH0 Deluge system is actuated hydraulicaly and resets locally.
When a hydraulic detection system, a Wet Pilot detection line, is exposed to a predetermined temperature level, its automatic fire sprinklers shatter open and commanding the FDV-DH0 deluge valve to open.
The Deluge system incorporates an emergency valve, bypassing the fire detection system for manual operation.
Designed for vertical or horizontal installation, a globe pattern, line pressure operated FDV-DH0 valve features a direct elastomeric diaphragm Seal. It has No balancing spring or internal metallic wet components in the valve body.
The hydrodynamic pattern design, ensures high flow rates with minimum head loss.

MARKETS

Commercial
Marine
Residential

TECHNICAL DATA

FLUID:
Water, Brackish water, Sea water, Foam

SIZE RANGE:
40mm to 250mm (1½" to 10")

AVAILABLE CONNECTIONS ENDS:
Flange*Flange, Groove*Groove, Flange*Groove, Groove*Flange, Thread*Thread

PRESSURE NOMINAL:
250 psi (17.2 bar)

APPROVALS

ADVANTAGES

- Only three parts: body, diaphragm & cover plate. No wet metal spring inside the control chamber
- Full bore unobstructed
- Simple manual reset of the valve to standby position without draining or opening the valve itself, neither closing OS&Y or other valves in the system
- Open fail safe valve, maintained in stand-by closed position
- Low maintenance cost: the valve is serviced in-line with only one replaceable part which is long life elastomeric diaphragm
- Conforms with inspection, testing and maintenance standard of water-based fire protection systems, NFPA 25

CHARACTERISTICS

- Hydro-dynamic pattern design ensures high flow rates with minimum head loss
- The valve trips open automatically upon a gradual release of water pressure from its control chamber. The trip is actuated by a Wet Pilot Line's hydraulic pressure release due to its exposure to flame heat
- Soft closing upon pressurization of the valve's control chamber, by line pressure or other independent water source to prevent surges

The FDV-DH0 resets to stand-by close position by pressurizing the Dry Pilot Line and manually operating the PSA device.

Schematic drawing

Set position

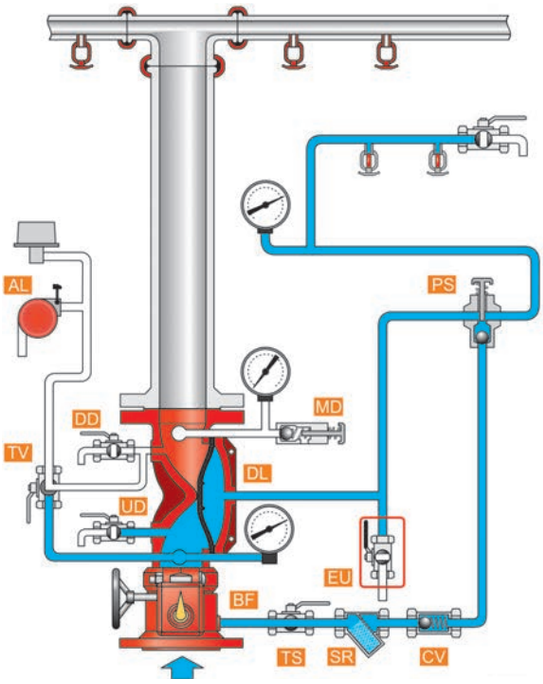

Fire position

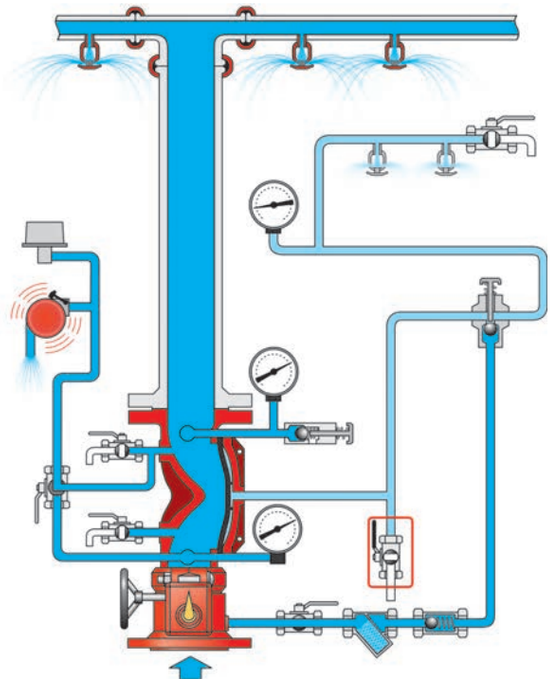

BF - Butterfly valve
DL - FDV Deluge valve
UD - Upstream drain valve
DD - Downstream drain valve

AL - Acoustic & Electric alarms
TS - Trim supply valve
SR - "Y" strainer
CV - Check valve

PS - PSA – Pressure Supply Arrestor
MD - MADV – Man/Auto Drain Valve
TV - Alarm test valve
EU - Emergency Manual Unit

OPERATION

SET position

Pressurized water in the valve's control chamber [DL] is trapped by the closed PSA [PA], the closed emergency valve [EU] and by the closed automatic Wet Pilot detection Line.
The hydraulic pressure that is accumulated in the Wet pilot detection line, maintains the FDV deluge valve [DL] closed.

FIRE situation

When the Wet pilot detection line's automatic fire sprinklers are subjected to flame heat and shatter-open, it enables the FDV control chamber to drain and de-pressurize, opening of the deluge valve and admitting water into the spray sprinkler system. The Deluge system incorporates an emergency valve, bypassing the fire detection system for manual operation.

RESET position

System reset requires a replacement replacement of all shattered-open wet pilot detection line's automatic fire sprinklers. The wet pilot line is then pressurized by the upstream pressure. The PSA [PS] push button should be pressed to enable upstream pressure passage to close the FDV's main valve.

FDV - DH0

Typical installation

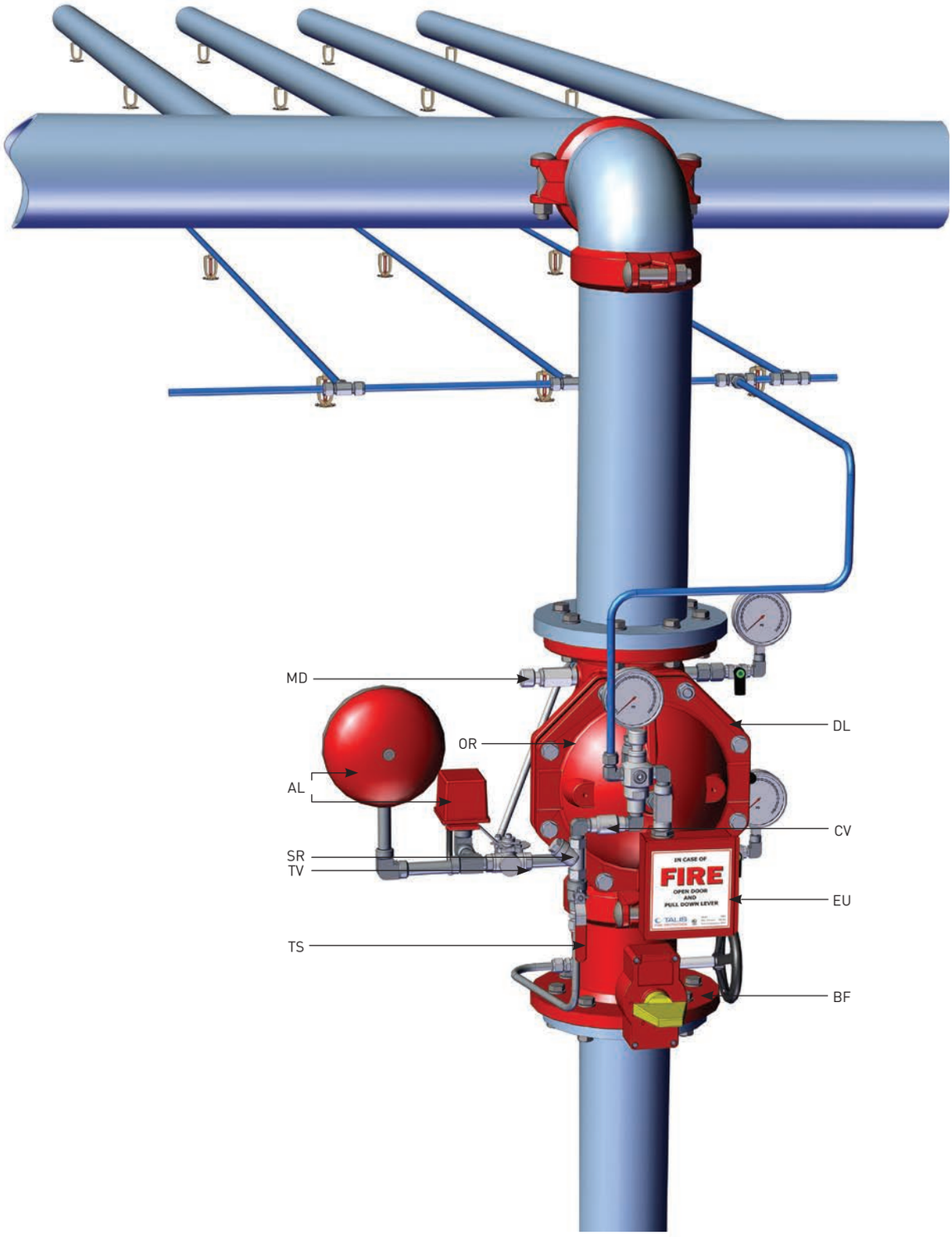

BF - Butterfly valve
DL - FDV Deluge valve
UD - Upstream drain valve
DD - Downstream drain valve

AL - Acoustic & Electric alarms
TS - Trim supply valve
SR - "Y" strainer
CV - Check valve

PS - PSA – Pressure Supply Arrestor
MD - MADV – Man/Auto Drain Valve
TV - Alarm test valve
EU - Emergency Manual Unit

Dimensions Table

Vertical

Size	1 1/2" 2"		3"		4"		6"		8"	
	mm	Inch	mm	Inch	mm	Inch	mm	Inch	mm	Inch
A	195	7.8	261	10.3	276	10.9	300	11.8	327	12.9
B	268	10.6	231	9	246	9.7	269	10.6	295	11.6
C	109	4.3	59	2.3	73	2.9	67	2.6	61	2.4
D	22.4	8.8	325	12.8	400	15.8	462	18.2	580	22.8
E	187	7.4	47	1.8	12	0.5	10	0.4	-	-
F	98	3.9	185	7.3	208	8.2	232	9.1	257	10.1
G	170	6.7	200	7.9	239	9.4	302	11.9	374	14.7
Kg/lb	16.1	35.6	28.4	62.7	45.2	99.7	63.9	140.9	103.3	227.8

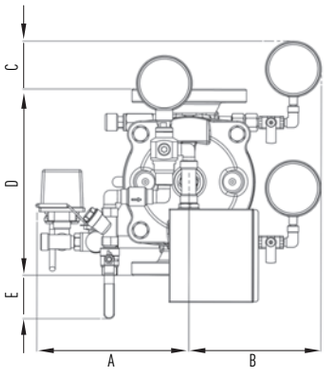

Horizontal

Size	1 1/2" 2"		3"		4"		6"		8"	
	mm	Inch	mm	Inch	mm	Inch	mm	Inch	mm	Inch
A	314	12.4	261	10.3	276	10.9	300	11.8	327	12.9
B	189	7.4	201	7.9	215	8.5	240	9.5	266	10.5
C	-	-	-	-	-	-	-	-	-	-
D	22.4	8.8	325	12.8	400	15.8	462	18.2	580	22.8
E	98	3.9	47	1.9	12	0.5	-	-	-	-
F	156	6.1	179	7	207	8.2	231	9	255	10
G	209	8.2	239	9.4	278	10.9	341	13.4	374	14.7
Kg/lb	16	35.3	28.5	63	45.1	99.5	63.8	140.8	103.4	228

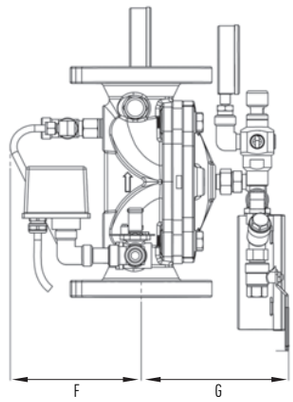

Factory Standard

MAIN VALVE:

BODY & COVER

- Ductile iron
- Cast Steel WCB
- Stainless Steel CF8
- Stainless Steel CF8M
- Nickel Aluminum Bronze

ELASTOMERS:

- NR, fabric reinforced Natural Rubber
- EPDM, fabric reinforced
- NBR, fabric reinforced Nitrile Rubber

COATING:

- Rilsan Polyamide based (Nylon 11)
- Polyester based EPC
- High built Epoxy FBE
- Vitreous Enamel (internal only)

TRIM

PIPING & TUBING:

- Stainless Steel 316
- Copper/Brass
- Cupro-Nickel
- Monel®

FITTINGS:

- Stainless Steel 316
- Brass
- Super Duplex
- Cupro-Nickel
- Monel®

ACCESSORIES:

- Brass Nickel plated
- Nickel Aluminium bronze
- Stainless steel CF8M
- Monel®
- Cupro-Nickel

PLEASE SPECIFY

- Working Media
- Ambiental conditions
- Min/Max operating flow
- Min/Max operating pressure
- Energize to Open/Close valve
- Wet Pilot's height.
- System installation orientation
- Additional accessories needed

For more detailed technical information, please refer to chapter Engineering Data.

TALIS FP RANGE

Deluge systems

Hydraulic Actuated with Remote Reset Deluge Valve

FDV - DH1

The FDV is a Fire Protection control valve for Deluge fire sprinkler systems, designed for installations in hazardous environments.
The FDV-DH1 Deluge system is actuated hydraulically and resets remotely.
When the Wet pilot detection line's automatic fire sprinklers are subjected to flame heat and shatter-open, it enables the FDV control chamber to drain and de-pressurize, opening of the deluge valve and admitting water into the spray sprinkler system. The Deluge system incorporates an emergency valve, bypassing the fire detection system for manual operation.
Designed for vertical or horizontal installation, a globe pattern, line pressure operated FDV-DH1 valve features a direct elastomeric diaphragm seal. It has no balancing spring or internal metallic wet components in the valve body. The hydrodynamic pattern design, ensures high flow rates with minimum head loss.

MARKETS

Marine
P.O.G.
Airports

TECHNICAL DATA

FLUID:
Water, Brackish water, Sea water, Foam

SIZE RANGE:
40mm to 250mm (1½" to 10")

AVAILABLE CONNECTIONS ENDS:
Flange*Flange, Groove*Groove, Flange*Groove, Groove*Flange, Thread*Thread

PRESSURE NOMINAL:
250 psi (17.2 bar)

APPROVALS

ADVANTAGES

- Only three parts: body, diaphragm & cover plate, no wet metal spring inside the control chamber
- Full bore unobstructed
- Simple reset of the valve to standby position without draining or opening the valve itself, neither closing OS&Y or other valves in the system
- Open fail safe valve, maintained in stand-by closed position
- Low maintenance cost: the valve is serviced in-line and only one replaceable part which is long life elastomeric diaphragm
- Conforms with inspection, Testing and Maintenance Standard of water-based Fire Protection Systems, NFPA 25

CHARACTERISTICS

- Hydro-dynamic pattern design ensures high flow rates with minimum head loss
- The valve trips open automatically upon a gradual release of water pressure from its control chamber. The trip is actuated by a Wet Pilot Line's hydraulic pressure release due to its exposure to flame heat
- Soft closing upon pressurization of the valve's control chamber, by line pressure or other independent water source, prevents surges

The FDV-DH1 resets to stand-by close position by pressurizing the Wet Pilot Line.

Schematic drawing

Set position

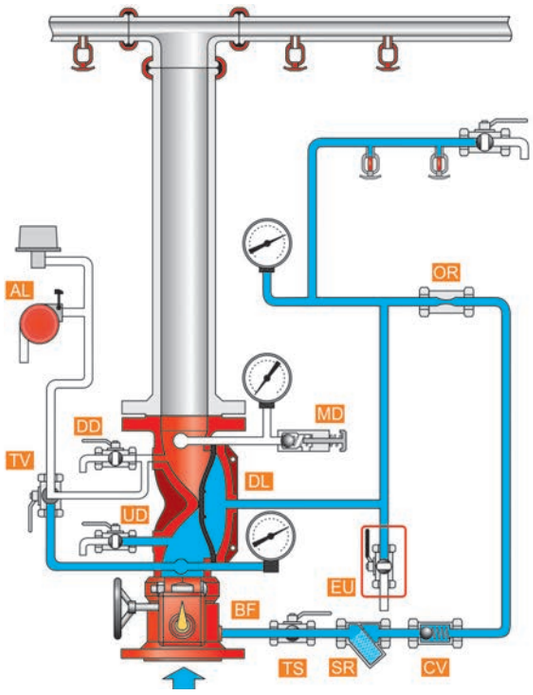

Fire position

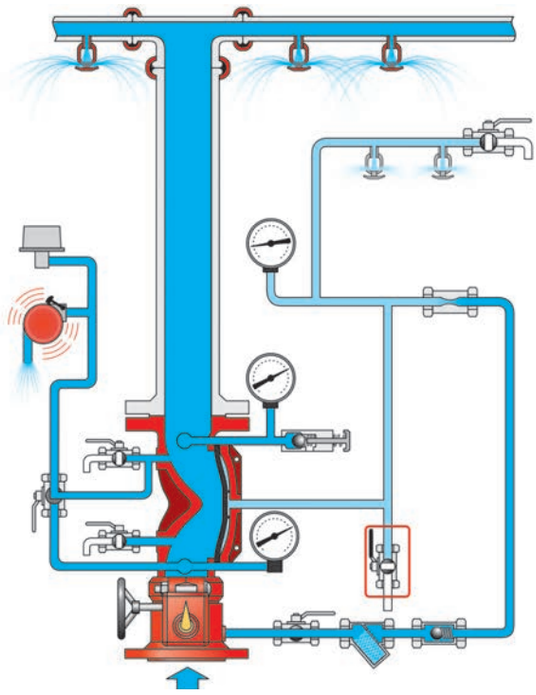

BF - Butterfly valve
DL - FDV Deluge valve
UD - Upstream drain valve
DD - Downstream drain valve
AL - Acoustic & Electric alarms

TS - Trim supply valve
SR - "Y" strainer
CV - Check valve
OR - Orifice
MD - MADV – Manual Automatic Drain Valve

TV - Alarm test valve
EU - Emergency Manual Unit
PC - PA-PTC – Pneumatic Actuator-Pressure to Close

OPERATION

SET position

Pressurized water in the valve's control chamber (DL) is trapped by check valve (CV), the closed PA-PTC actuator (PC) and by the closed emergency valve (EU), maintaining the FDV deluge valve (DL) closed.

FIRE situation

When some of the Dry pilot detection line's automatic fire sprinklers are subjected to flames heat and shatter-open, the pilot detection line depressurizes and the PA-PTC control chamber.The PA-PTC (PC) opens and drains the deluge valve's control chamber. The FDV deluge valve opens and admits water to the spray sprinklers line.

RESET position

System reset requires the replacement of all of the dry pilot detection Line's shattered-open automatic fire sprinklers. The detection line is then pressurized, the PA-PTC actuator, to reset it to closed position. The FDV valve control chamber pressurizes as well and the valve closes.

FDV - DH1

Typical installation

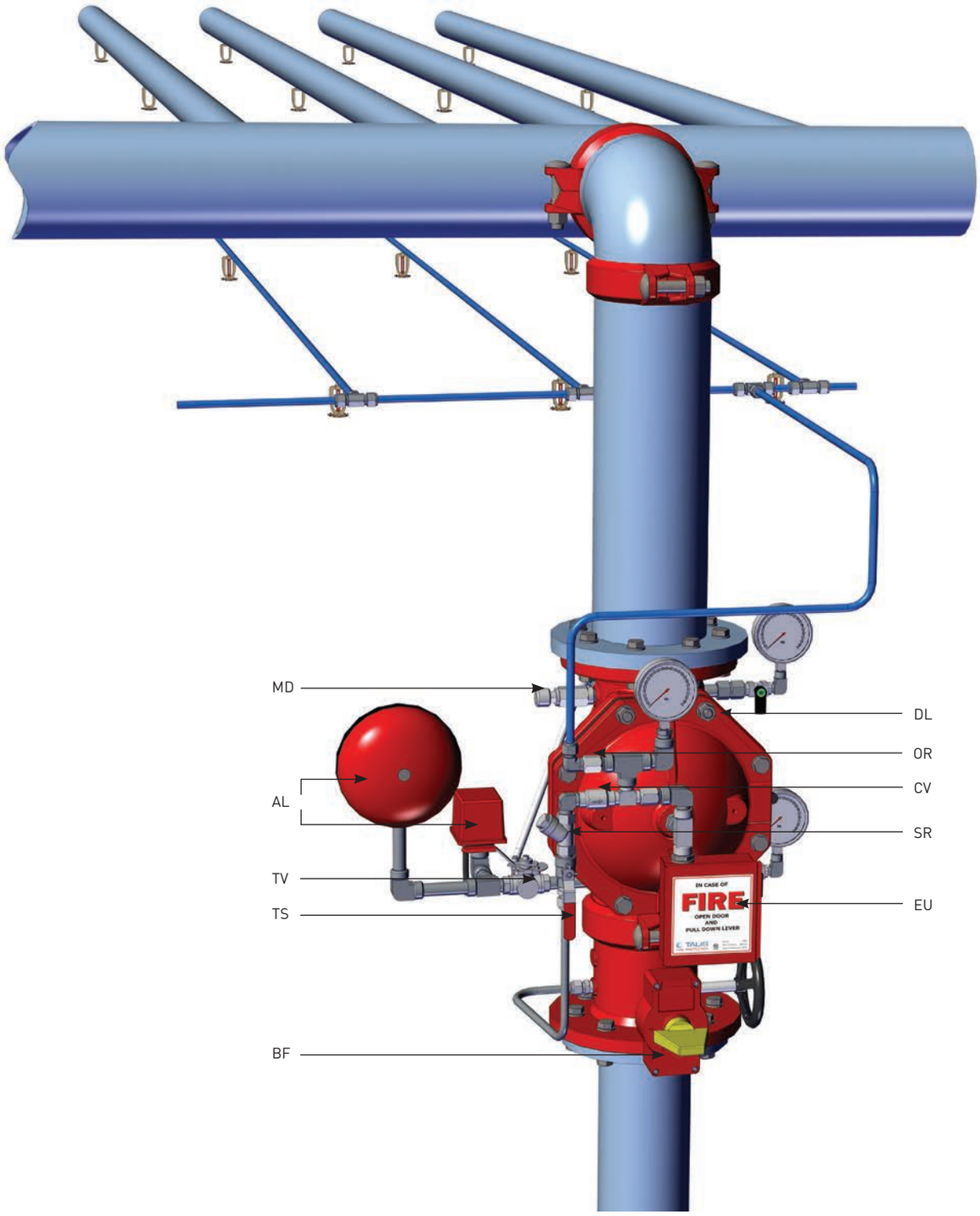

BF - Butterfly valve
DL - FDV Deluge valve
UD - Upstream drain valve
DD - Downstream drain valve

AL - Acoustic & Electric alarms
TS Trim supply valve
SR - "Y" strainer
CV - Check valve

OR - Orifice
MD - MADV – Manual Automatic Drain Valve
TV - Alarm test valve
EU - Emergency Manual Unit

Dimensions Table

Vertical

Size	1 1/2" 2"		3"		4"		6"		8"	
	mm	Inch	mm	Inch	mm	Inch	mm	Inch	mm	Inch
A	315	12.4	265	10.4	299	11.8	304	12	335	13.2
B	189	7.4	202	7.9	196	7.7	240	9.5	262	10.3
C	52	2	-	-	-	-	-	-	-	-
D	224	8.8	325	12.8	400	15.7	462	18	580	22.8
E	98	3.8	47	1.8	12	0.5	-	-	-	-
F	155	6.1	172	6.8	219	8.6	238	9.4	258	10.1
G	308	12.1	337	13.3	367	14.5	431	17	460	18.1
Kg/lb	15.7	34.6	27.8	61.3	44.6	98.3	63.6	140.2	102.7	226.4

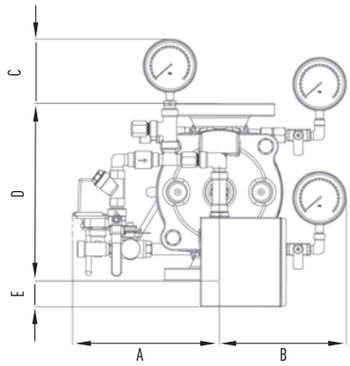

Horizontal

Size	1 1/2" 2"		3"		4"		6"		8"	
	mm	Inch	mm	Inch	mm	Inch	mm	Inch	mm	Inch
A	315	12.4	265	10.4	299	11.8	304	12	335	13.2
B	189	7.4	202	7.9	196	7.7	240	9.5	262	10.3
C	52	2	-	-	-	-	-	-	-	-
D	224	8.8	325	12.8	400	15.7	462	18	580	22.8
E	98	3.8	47	1.8	12	0.5	-	-	-	-
F	155	6.1	172	6.8	219	8.6	238	9.4	258	10.1
G	308	12.1	337	13.3	367	14.5	431	17	460	18.1
Kg/lb	15.8	34.8	28.2	62.2	44.9	99	63.6	140.2	102.9	226.8

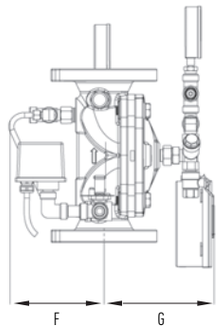

Factory Standard

MAIN VALVE:

BODY & COVER

- Ductile iron
- Cast Steel WCB
- Stainless Steel CF8
- Stainless Steel CF8M
- Nickel Aluminum Bronze

ELASTOMERS:

- NR, fabric reinforced Natural Rubber
- EPDM, fabric reinforced
- NBR, fabric reinforced Nitrile Rubber

COATING:

- Rilsan Polyamide based (Nylon 11)
- Polyester based EPC
- High built Epoxy FBE
- Vitreous Enamel (internal only)

TRIM

PIPING & TUBING:

- Stainless Steel 316
- Copper/Brass
- Cupro-Nickel
- Monel®

FITTINGS:

- Stainless Steel 316
- Brass
- Super Duplex
- Cupro-Nickel
- Monel®

ACCESSORIES:

- Brass Nickel plated
- Nickel Aluminium bronze
- Stainless steel CF8M
- Monel®
- Cupro-Nickel

PLEASE SPECIFY

- Working Media
- Ambiental conditions
- Min/Max operating flow
- Min/Max operating pressure
- Energize to Open/Close valve
- Wet Pilot's height.
- System installation orientation
- Additional accessories needed

For more detailed technical information, please refer to chapter Engineering Data.

TALIS FP RANGE

Deluge systems

Hydraulic actuated & Anti-Columning Local Reset Deluge Valve

FDV - DA0

The FDV is a Fire Protection control valve for Deluge fire sprinkler systems, designed for installations in hazardous environments.
The FDV-DA0 Deluge system is actuated hydraulicallyand resets locally.
When a hydraulic detection system, a Wet Pilot Detection Line, is exposed to predetermined temperature level, automatic fire sprinklers shatter open causing a pressure drop that activate a pilot valve commanding the FDV-DA0 Deluge valve to open.
The Anti Columning feature ensures system operation, regardlessof the Detection line's height and distance from the Control valve. The Deluge system incorporates an emergency valve, bypassing the fire detection systems for manual operation.
Designed for vertical or horizontal installation, a globe pattern, line pressure operated FDV-DA0 valve features a direct elastomeric diaphragm seal. It has no balancing spring or internal metallic wet components in the valve body. The hydrodynamic pattern design, ensures high flow rates with minimum head loss.

MARKETS

Commercial | Marine | Residential

TECHNICAL DATA

FLUID:
Water, Brackish water, Sea water, Foam

SIZE RANGE:
40mm to 250mm (1½" to 10")

AVAILABLE CONNECTIONS ENDS:
Flange*Flange, Groove*Groove, Flange*Groove, Groove*Flange, Thread*Thread

PRESSURE NOMINAL:
250 psi (17.2 bar)

APPROVALS

ADVANTAGES

- Only three parts: body, diaphragm & cover plate, no wet metal spring inside the control chamber
- Full bore unobstructed
- Simple manual reset of the valve to standby position without draining or opening the valve itself, neither closing OS&Y or other valves in the system
- Full Anti Columning property enables a nearly unlimited pilot line height
- Low maintenance cost: the valve is serviced in-line and only one replaceable part which is long life elastomeric diaphragm
- Conforms with inspection, Testing and Maintenance Standard of water-based Fire Protection Systems, NFPA 25

CHARACTERISTICS

- Hydro-dynamic pattern design ensures high flow rates with minimum head loss
- The valve trips open automatically upon a gradual release of water pressure from its control chamber. The trip is actuated by a Wet Pilot Line's hydraulic pressure release due to its exposure to flame heat. The Anti-Columning properties guarantees an immediate system trip, regardless of the Wet Pilot height
- Soft closing upon pressurization of the valve's control chamber, by line pressure or other independent water source to prevents surges

The FDV-DA0 resets to stand-by close position by pressurizing the Dry Pilot Line and manually operating the PSA device.

Schematic drawing

Set position

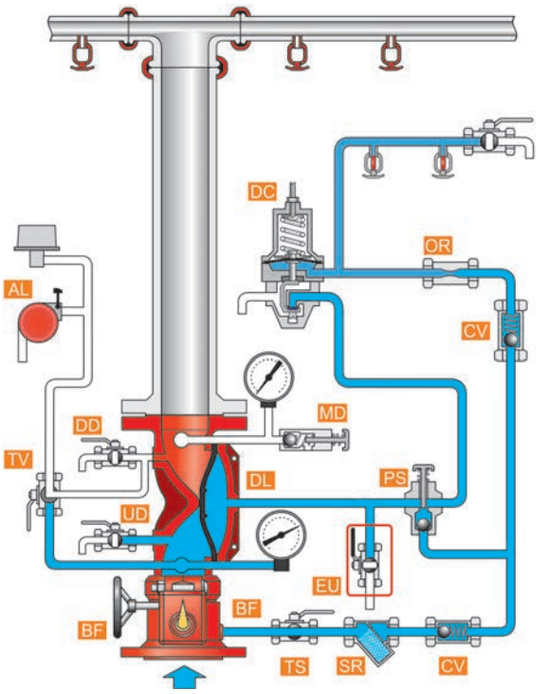

Fire position

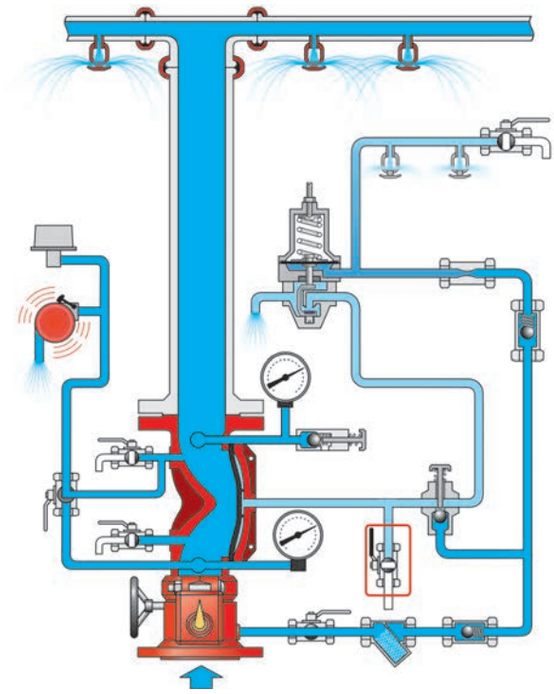

BF - Butterfly valve
DL - FDV Deluge valve
UD - Upstream drain valv
DD - Downstream drain valve
AL - Acoustic & Electric alarms
TS - Trim supply valve
SR - "Y" strainer
CV - Check valve
OR - Orifice
PS - PSA – Pressure Supply Arrestor
MD - MADV – Manual Automatic Drain Valve
TV - Alarm test valve
EU - Emergency Manual Unit
DC - DCPV = Drain Control Pilot Valve

OPERATION

SET position

Pressurized water in the valve's control chamber (DL) is trapped by the closed PSA (PA), by the closed emergency valve (EU) and by the closed DCPV drain pilot valve (DC). The hydraulic pressure that is accumulated in the Wet pilot line keeps this device in its close position, maintaining the FDV deluge valve (DL) closed.

FIRE situation

When some of the Wet pilot detection line's automatic fire sprinklers are subjected to the predetermined temperature levels and shutter-open, the pilot line pressure drops and the DCPV opens it drain port regardless of the residual column pressure.

Opening its drain port, the DCPV releases the FDV control chamber pressure causing it to open and admit water into the spray sprinklers pipeline.

RESET position

System reset requires the replacement of all Shattered-open Fire sprinklers in the Detection pilot line.The wet pilot line is then pressurized to reset the DCPV to closed position.The PSA (PS) push button should be pressed to enable upstream pressure passage close the FDV's main valve.

FDV - DA0

Typical installation

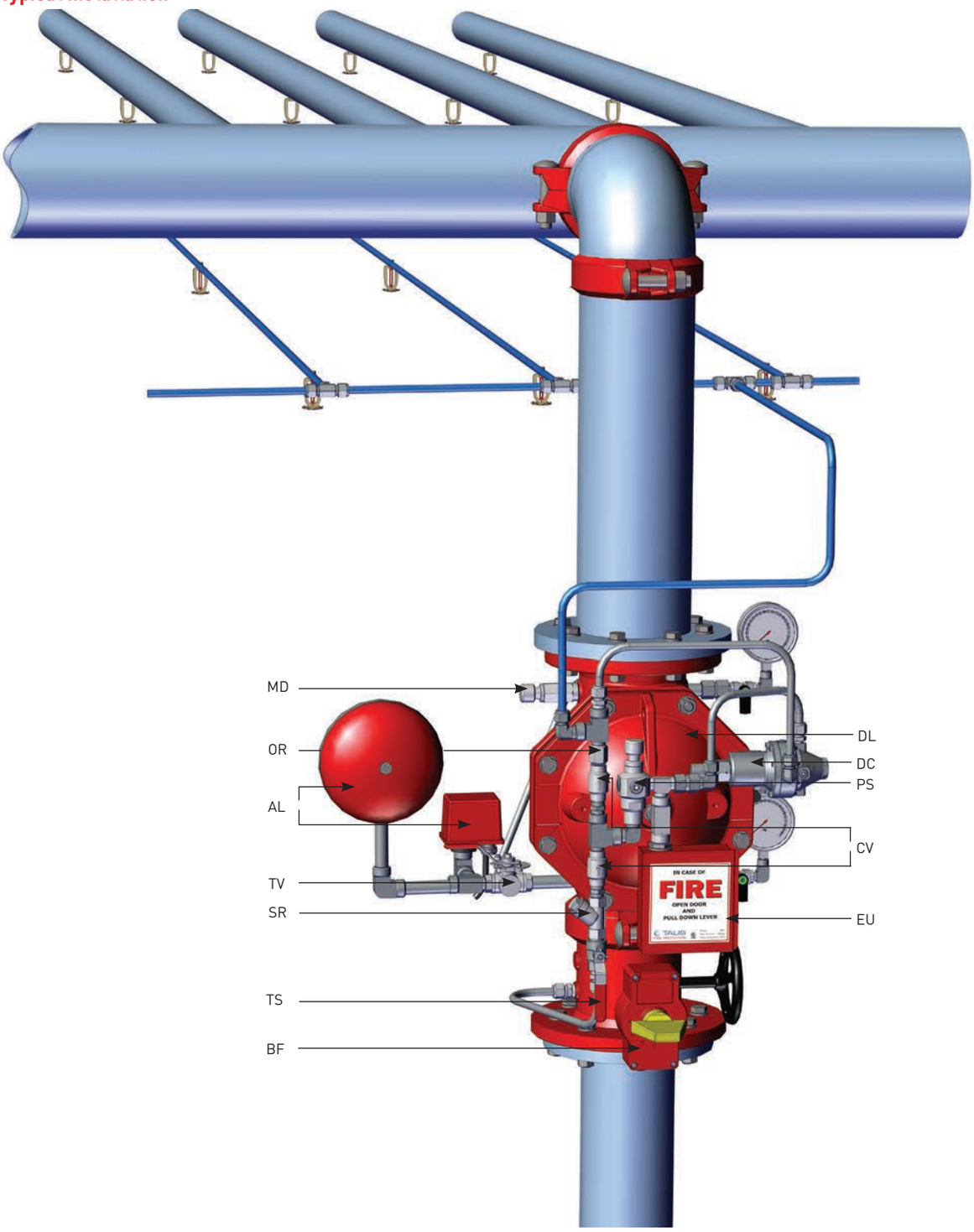

BF - Butterfly valve
DL - FDV Deluge valve
UD - Upstream drain valv
DD - Downstream drain valve
AL - Acoustic & Electric alarms

TS - Trim supply valve
SR - "Y" strainer
CV - Check valve
OR - Orifice
PS - PSA – Pressure Supply Arrestor

MD - MADV – Manual Automatic Drain Valve
TV - Alarm test valve
EU - Emergency Manual Unit
DC - DCPV = Drain Control Pilot Valve

Dimensions Table

Vertical

Size	1 1/2" 2"		3"		4"		6"		8"	
	mm	Inch	mm	Inch	mm	Inch	mm	Inch	mm	Inch
A	251	9.9	262	10.3	297	11.7	303	11.9	355	14.0
B	234	9.2	243	9.6	282	11.1	278	10.9	228	9.0
C	136	5.3	85	3.3	79	3.1	67	2.6	61	2.4
D	224	8.8	325	12.8	400	15.7	462	18.2	580	22.8
E	69	2.7	150	5.9	115	4.5	69	2.7	27	1.1
F	232	9.1	162	6.4	145	5.7	232	9.1	212	8.3
G	326	12.8	203	8.0	238	9.4	326	12.8	330	13.0
Kg/lb	20.5	45.1	32.9	72.5	49.8	109.7	68.3	150.7	107.9	237.9

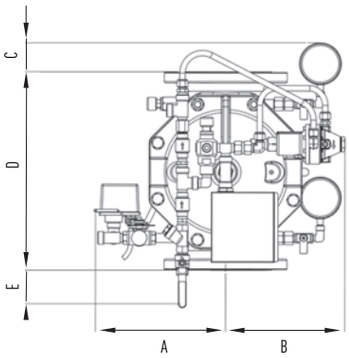

Horizontal

Size	1 1/2" 2"		3"		4"		6"		8"	
	mm	Inch	mm	Inch	mm	Inch	mm	Inch	mm	Inch
A	356	14.0	367	14.4	395	15.6	420	16.5	454	17.9
B	197	7.8	213	8.4	221	8.7	278	10.9	278	10.9
C	151.3	5.9	97	3.8	61	2.4	31	1.2	-	-
D	224	8.8	325	12.8	400	15.7	462	18.2	580	22.8
E	124	4.9	72	2.8	30	1.2	-	-	-	-
F	107	4.2	123	4.8	146	5.7	171	6.7	198	7.8
G	400	15.7	426	16.8	402	15.8	465	18.3	470	19.7
Kg/lb	20.6	45.5	33	72.8	49.9	110	68.5	151.1	108	238.2

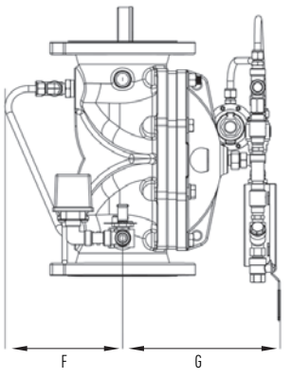

Factory Standard

MAIN VALVE:

BODY & COVER

- Ductile iron
- Cast Steel WCB
- Stainless Steel CF8
- Stainless Steel CF8M
- Nickel Aluminum Bronze

ELASTOMERS:

- NR, fabric reinforced Natural Rubber
- EPDM, fabric reinforced
- NBR, fabric reinforced Nitrile Rubber

COATING:

- Rilsan Polyamide based (Nylon 11)
- Polyester based EPC
- High built Epoxy FBE
- Vitreous Enamel (internal only)

TRIM

PIPING & TUBING:

- Stainless Steel 316
- Copper/Brass
- Cupro-Nickel
- Monel®

FITTINGS:

- Stainless Steel 316
- Brass
- Super Duplex
- Cupro-Nickel
- Monel®

ACCESSORIES:

- Brass Nickel plated
- Nickel Aluminium bronze
- Stainless steel CF8M
- Monel®
- Cupro-Nickel

PLEASE SPECIFY

- Working Media
- Ambiental conditions
- Min/Max operating flow
- Min/Max operating pressure
- Energize to Open/Close valve
- Wet Pilot's height
- System installation orientation
- Additional accessories needed

For more detailed technical information, please refer to chapter Engineering Data.

Deluge systems

Hydraulic actuated & Anti-Columning Remote Reset Deluge Valve

FDV - DA1

The FDV is a Fire Protection control valve for Deluge fire sprinkler systems, designed for installations in hazardous environments.
The FDV-DA1 Deluge system is actuated hydraulically and resets remotely.
When a hydraulic detection system, a Wet Pilot Detection Line, is exposed to a predetermined temperature level, automatic fire sprinklers shatter open causing a pressure drop that activates a pilot valve, commanding the FDV-DA1 Deluge to open.The Anti Columning property enables a system operation, indifferent to the detection line's height and distance from the control valve.
The Deluge system incorporates an emergency valve, by passing the fire detection systems for manual operation.
Designed for vertical or horizontal installation, A globe pattern, line pressure operated FDV-DA1 valve features a direct elastomeric diaphragm seal. It has no balancing spring or internal metallic wet components in the valve body. The hydrodynamic pattern design, ensures high flow rates with minimum head loss.

MARKETS

Marine | P.O.G. | Airports

TECHNICAL DATA

FLUID:
Water, Brackish water, Sea water, Foam

SIZE RANGE:
40mm to 250mm (1½" to 10")

AVAILABLE CONNECTIONS ENDS:
Flange*Flange, Groove*Groove, Flange*Groove, Groove*Flange, Thread*Thread

PRESSURE NOMINAL:
250 psi (17.2 bar)

APPROVALS

ADVANTAGES

- Only three parts: body, diaphragm & cover plate, no wet metal spring inside the control chamber
- Full bore unobstructed
- Simple manual reset of the valve to standby position without draining or opening the valve itself, neither closing OS&Y or other valves in the system
- Full Anti Columning property enables a nearly unlimited pilot line height
- Low maintenance cost: the valve is serviced in-line and only one replaceable part which is long life elastomeric diaphragm
- Conforms with inspection, Testing and Maintenance Standard of water-based Fire Protection Systems, NFPA 25

CHARACTERISTICS

- Hydro-dynamic pattern design ensures high flowrates with minimum head loss
- The valve trips open automatically upon a gradual release of water pressure from its control chamber. The trip is actuated by a Wet Pilot Line's hydraulic pressure release due to its exposure to flame heat. The Anti-Columning properties guarantees an immediate system trip, regardless of the Wet Pilot height
- Soft closing upon pressurization of the valve's control chamber, by line pressure or other independent water source, prevents surges

The FDV-DA1 resets to stand-by close position by pressurizing the Wet Pilot Line.

Schematic drawing

Set position

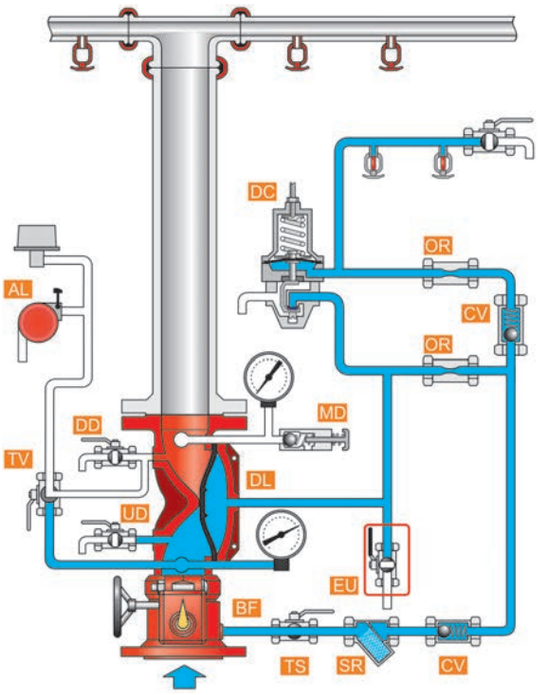

Fire position

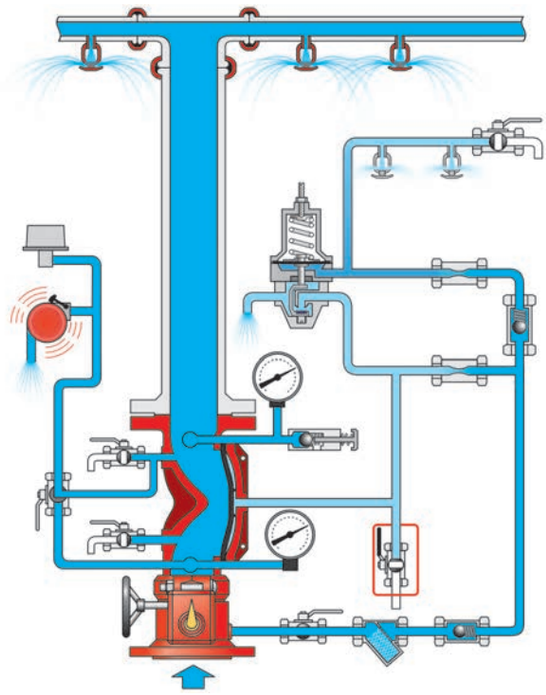

BF - Butterfly valve
DL - FDV Deluge valve
UD - Upstream drain valv
DD - Downstream drain valve
AL - Acoustic & Electric alarms

TS - Trim supply valve
SR - "Y" strainer
CV - Check valve
OR - Orifice
MD - MADV – Manual Automatic Drain Valve

TV - Alarm test valve
EM - Emergency valve
EU - Emergency Manual Unit
DC - Drain Control Pilot Valve

OPERATION

SET position

Pressurized water in the valve's control chamber (DL) is trapped by the check valve (CV), the closed emergency valve (EU) and by the closed DCPV drain pilot valve (DC). The hydraulic pressure accumulated in the Wet pilot line keeps this device in its close position, maintaining the FDV deluge valve (DL) closed.

FIRE situation

When some of the Wet pilot detection line's automatic fire sprinklers are subjected to the predetermined temperature levels and shatter-open, the pilot detection line pressure drops and the DCPV opens its drain port regardless of the residual column pressure. Opening its drain port, the DCPV releases the FDV control chamber's pressure, causing it to open and admit water into the spray sprinklers pipeline.

RESET position

System reset requires the replacement of all shattered-open Fire sprinklers in the Detection pilot line. The wet pilot is then pressurized to reset ensures the DCPV to close position.As a result, the FDV valve control chamber pressurizes and the valve closes.

FDV - DA1

Typical installation

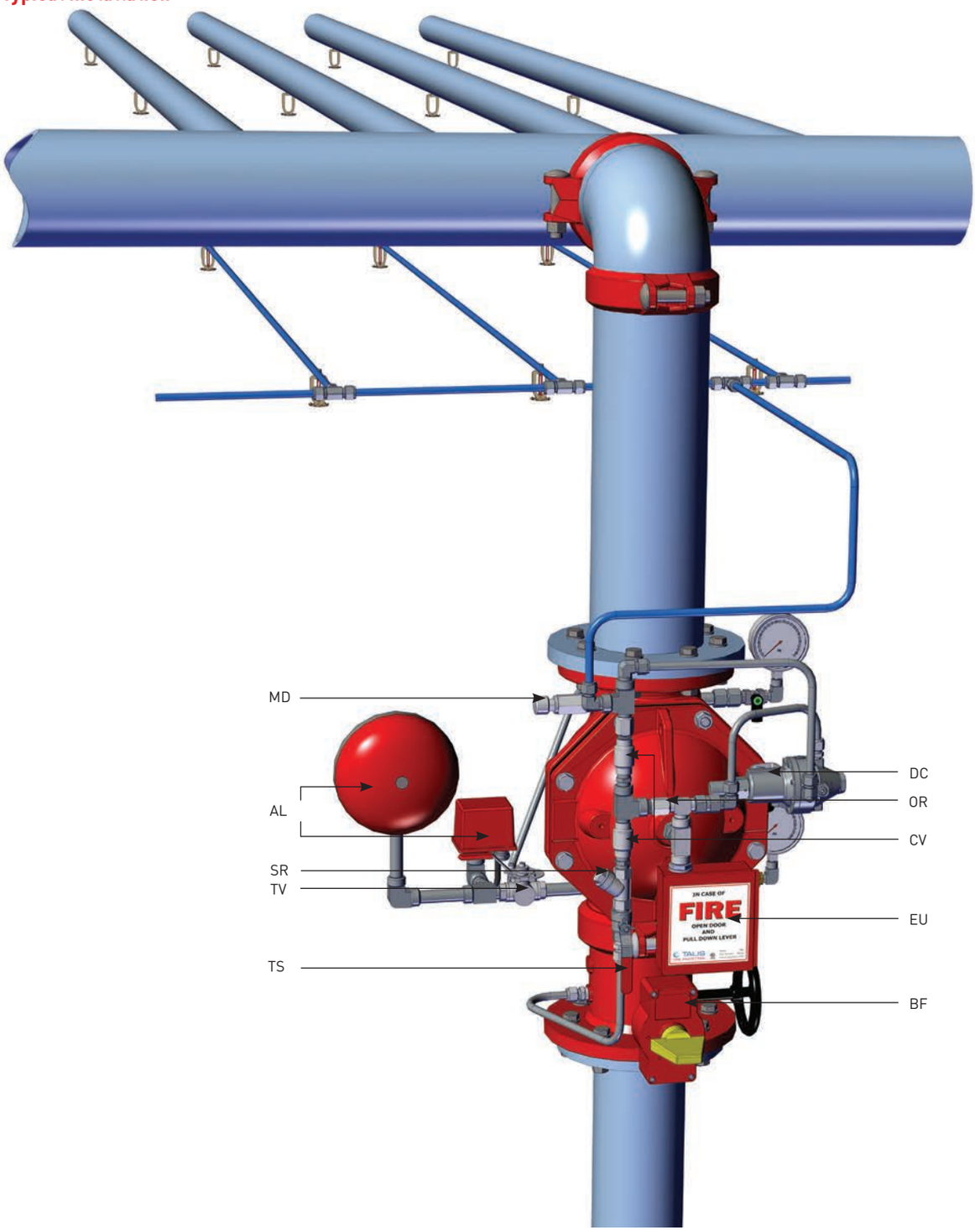

BF - Butterfly valve
DL - FDV Deluge valve
UD - Upstream drain valv
DD - Downstream drain valve
AL - Acoustic & Electric alarms

TS - Trim supply valve
SR - "Y" strainer
CV - Check valve
OR - Orifice
MD - MADV – Manual Automatic Drain Valve

TV - Alarm test valve
EM - Emergency valve
EU - Emergency Manual Unit
DC - Drain Control Pilot Valve

Dimensions Table

Vertical

Size	1 1/2" 2"		3"		4"		6"		8"	
	mm	Inch	mm	Inch	mm	Inch	mm	Inch	mm	Inch
A	259	10.2	270	10.6	297	11.7	306	12	331	13
B	275	10.8	245	9.6	284	11.2	278	10.9	329	12.9
C	105	4.1	83	3.3	94	3.7	67	2.6	61	2.4
D	224	8.8	325	12.8	400	15.7	462	18.2	580	22.8
E	124	4.9	73	2.8	36	1.4	13	0.5	-	-
F	150	5.9	166	6.5	145	5.7	232	9.1	260	10.2
G	275	10.8	305	12	247	9.7	311	12.2	340	13.4
Kg/lb	19.3	42.6	31.7	69.9	48.7	107.4	67.5	148.8	106.8	235.4

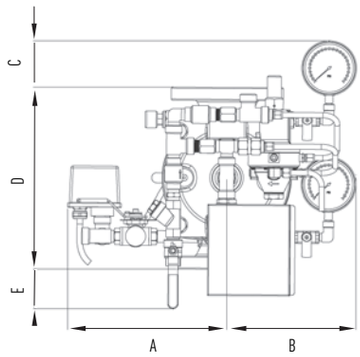

Horizontal

Size	1 1/2" 2"		3"		4"		6"		8"	
	mm	Inch	mm	Inch	mm	Inch	mm	Inch	mm	Inch
A	359	14.1	375	14.7	395	15.5	421	16.6	450	17.8
B	190	7.5	202	7.9	227	8.9	278	10.9	262	10.3
C	150	5.9	96	3.8	61	2.4	31	1.2	-	-
D	224	8.8	325	12.8	400	15.7	462	18.2	580	22.8
E	124	4.9	73	2.8	36	1.4	5.5	0.2	-	-
F	155	6.1	169	6.6	145	5.7	171	6.7	198	7.8
G	345	13.6	332	13	311	12.2	374	14.7	404	15.9
Kg/lb	19.4	42.7	32	70.5	48.8	107.6	67.7	149.2	106.9	235.7

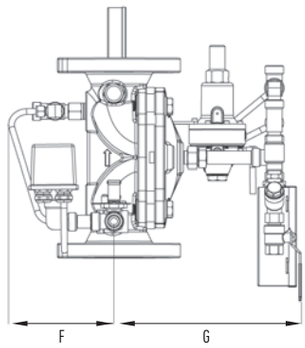

Factory Standard

MAIN VALVE:

BODY & COVER

- Ductile iron
- Cast Steel WCB
- Stainless Steel CF8
- Stainless Steel CF8M
- Nickel Aluminum Bronze

ELASTOMERS:

- NR, fabric reinforced Natural Rubber
- EPDM, fabric reinforced
- NBR, fabric reinforced Nitrile Rubber

COATING:

- Rilsan Polyamide based (Nylon 11)
- Polyester based EPC
- High built Epoxy FBE
- Vitreous Enamel (internal only)

TRIM

PIPING & TUBING:

- Stainless Steel 316
- Copper/Brass
- Cupro-Nickel
- Monel®

FITTINGS:

- Stainless Steel 316
- Brass
- Super Duplex
- Cupro-Nickel
- Monel®

ACCESSORIES:

- Brass Nickel plated
- Nickel Aluminium bronze
- Stainless steel CF8M
- Monel®
- Cupro-Nickel

PLEASE SPECIFY

- Working Media
- Ambiental conditions
- Min/Max operating flow
- Min/Max operating pressure
- Energize to Open/Close valve
- Wet Pilot's height
- System installation orientation
- Additional accessories needed

For more detailed technical information, please refer to chapter Engineering Data.

TALIS FP RANGE

Modulating Deluge systems

Electrical Actuated with Local Reset, Pressure Reducing Deluge Valve

FDV - PE0

The FDV is a Fire Protection control valve for Deluge fire sprinkler systems, designed for installations in hazardous environments.
The FDV-PE0 is a pressure control Deluge system, actuated electrically and resets locally.
An electric detection systems activates a solenoid valve through a control panel, to open the FDV deluge valve. Once open, the valve reduces the inlet high pressure to a predetermined fixed outlet pressure.
The Deluge system incorporates an emergency valve, bypassing the fire detection systems for manual operation. Designed for vertical or horizontal installation, a globe pattern, line pressure operated FDV-PE0 valve features a direct elastomeric diaphragm seal. It has no balancing spring or internal metallic wet components in the valve body. The hydrodynamic pattern design, ensures high flow rates with minimum head loss.

MARKETS

Commercial
Industry
Marine
Residential

TECHNICAL DATA

FLUID:
Water, Brackish water, Sea water, Foam

SIZE RANGE:
40mm to 250mm (1½" to 10")

AVAILABLE CONNECTIONS ENDS:
Flange*Flange, Groove*Groove, Flange*Groove, Groove*Flange, Thread*Thread

PRESSURE NOMINAL:
250 psi (17.2 bar)

REGULATION RATIO: up to 5:1

SENSITIVITY: 1.45 psi (0.1 Bar)

APPROVALS

ADVANTAGES

- Only three parts: body, diaphragm & cover plate, no wet metal spring inside the control chamber
- Full bore unobstructed
- Simple manual reset of the valve to standby position without draining or opening the valve itself, neither closing OS&Y or other valves in the system
- Open fail safe valve, maintained in stand-by closed position.
- Low maintenance cost: the valve is serviced in-line and only one replaceable part which is long life elastomeric diaphragm.
- Conforms with inspection, Testing and Maintenance Standard of water-based Fire Protection Systems, NFPA 25

CHARACTERISTICS

- Hydro-dynamic pattern design ensures high flowrates with minimum head loss
- The valve trips open automatically upon a gradual release of water pressure from its control chamber. The valve is actuated by an electric signal transmitted to the valve's solenoid from the main control panel, due to a flame heat exposure of a sensors detection system
- Soft closing upon pressurization of the valve's control chamber, by line pressure or other independent water source, prevents surges
- A pressure reducing pilot enables a full control over the downstream pressure and ensures a steady set in a wide pressure range

The FDV-PE0 resets to stand-by close position by de-energizing the alarm system solenoid's coil through the main control panel and by manually operating the local reset device – the PSA.

Schematic drawing

Set position

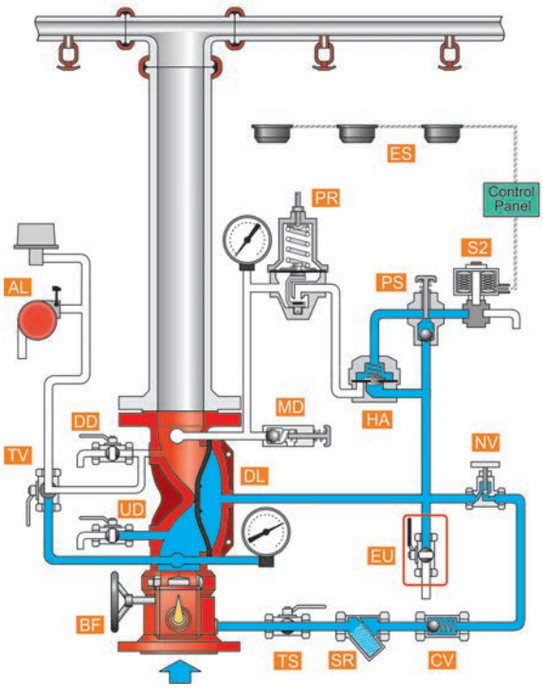

Fire position

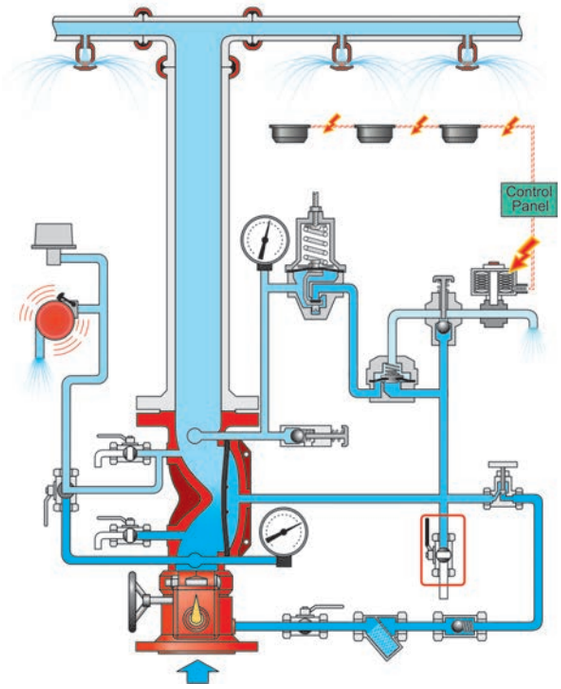

BF - Butterfly valve
DL - FDV Deluge valve
UD - Upstream drain valve
DD - Downstream drain valve
AL - Acoustic & Electric alarms
TS - Trim supply valve
SR - "Y" strainer
CV - Check valve
NV - Needle valve
PS - PSA – Pressure Supply Arrestor
MD - MADV – Manual Automatic Drain Valve
TV - Alarm test valve
EU - Emergency Manual Unit
HA - HAV – 2 Hydraulic Actuator Valve
PR - PRPV – Pressure Reducing Pilot Vale
S2 - Solenoid 2 way
ES - Electric Sensors system

OPERATION

SET position

Pressurized water in the valve's control chamber (DL) is trapped by check valve (CV), the Closed Drain actuator HAV-2 (HA) and by the closed emergency valve (EU), maintaining the FDV deluge valve (DL) closed.

FIRE situation

When the electric detection system senses heat, it triggers the main control panel that in turn, transmits an electric signal commanding the 2 way solenoid valve (S2) to open. The solenoid drains the HAV-2's control chamber, commanding the Deluge valve to openthrough the pressure reducing pilot (PR), admitting water to the spray sprinklers line at a steady, preset pressure.

RESET position

System reset requires the reset of the electrical alarm system to de-energize and close the solenoid valve. The PSA (PS) push button should be pressed to pressurize the HAV-2's control chamber. When the drain actuator is close, upstream pressurizes the FDV's control chamber and the valve closes.

FDV - PE0

Typical installation

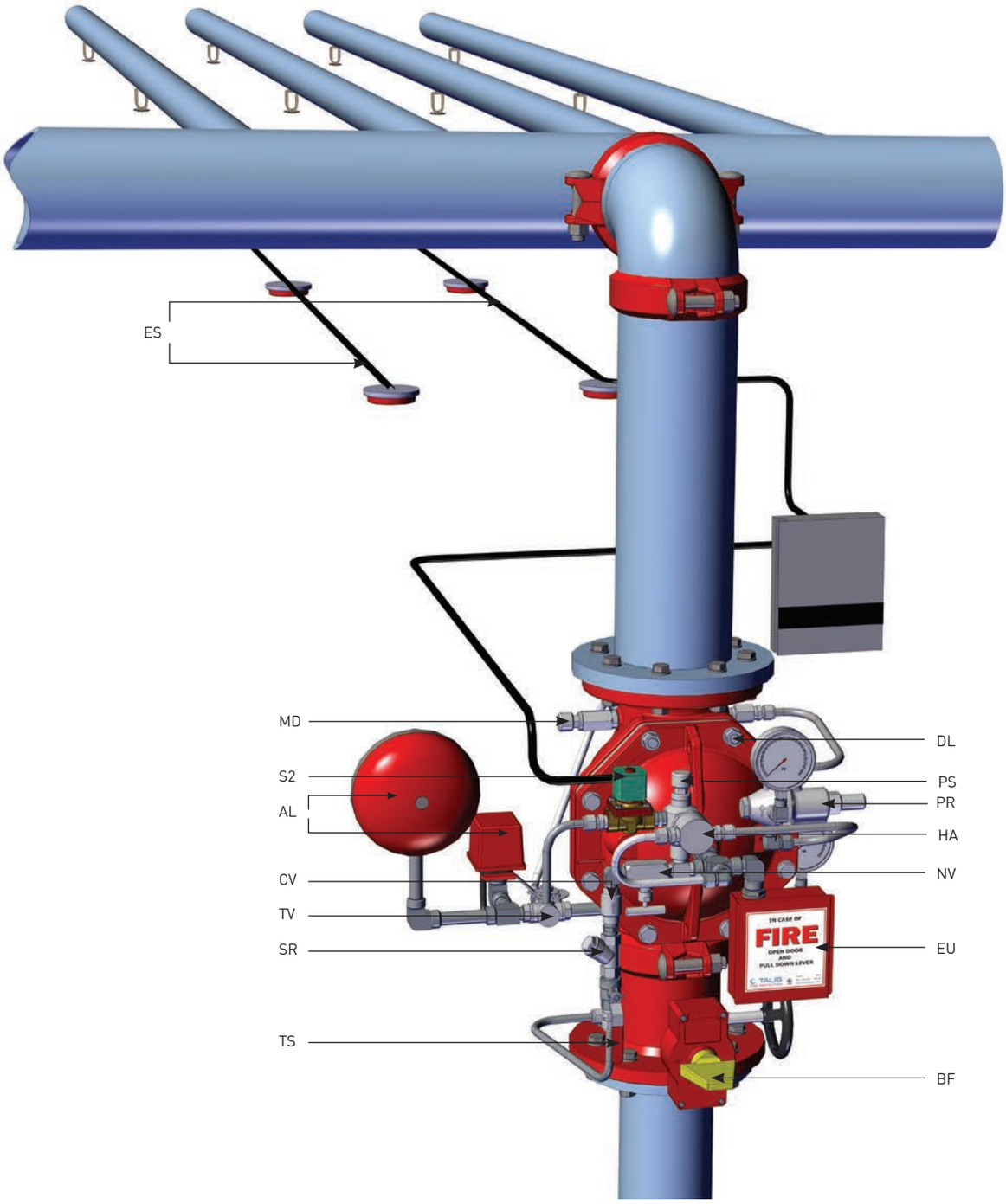

BF - Butterfly valve
DL - FDV Deluge valve
UD - Upstream drain valve
DD - Downstream drain valve
AL - Acoustic & Electric alarms
TS - Trim supply valve
SR - "Y" strainer

CV - Check valve
NV - Needle valve
PS - PSA – Pressure Supply Arrestor
MD - MADV – Manual Automatic Drain Valve
TV - Alarm test valve
EU - Emergency Manual Unit

HA - HAV – 2 Hydraulic Actuator Valve
PR - PRPV – Pressure Reducing Pilot Valve
S2 - Solenoid 2 way
ES - Electric Sensors system

Dimensions Table

Vertical

Size	1 1/2" 2"		3"		4"		6"		8"	
	mm	Inch	mm	Inch	mm	Inch	mm	Inch	mm	Inch
A	240	9.5	267	10.5	279	11	307	12.1	337	13.2
B	268	10.5	237	9.3	284	11.2	258	10.1	362	14.2
C	82	3.2	64	2.5	-	-	-	-	-	-
D	224	8.8	325	12.8	401	15.8	462	18.2	580	22.8
E	177	7	126	5	91	3.6	60	2.3	-	-
F	160	6.3	171	6.7	207	8.1	232	9.1	257	10.1
G	281	11	310	12.2	341	13.4	404	15.9	434	17
Kg/lb	21.5	47.7	33.7	74.3	51	112.4	69.7	153.6	109.1	240.5

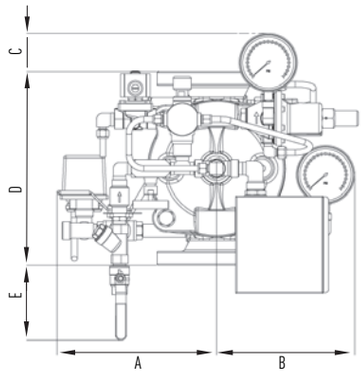

Horizontal

Size	1 1/2" 2"		3"		4"		6"		8"	
	mm	Inch	mm	Inch	mm	Inch	mm	Inch	mm	Inch
A	240	9.4	267	10.5	281	11	307	12.1	337	13.2
B	255	10	271	10.7	284	11.2	314	12.4	349	13.7
C	6	0.2	36	1.4	-	-	-	-	-	-
D	224	8.8	325	12.8	400	15.8	462	18.2	580	22.8
E	177	7	126	5	91	3.6	60	2.3	-	-
F	155	6.1	172	6.8	208	8.2	232	9.1	257	10.1
G	341	13.4	335	13.2	383	15.1	429	16.9	496	19.5
Kg/lb	21.6	47.6	33.8	74.5	50.9	112.2	69.6	153.4	153.4	240

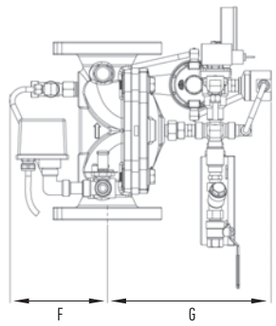

Factory Standard

MAIN VALVE:

BODY & COVER

- Ductile iron
- Cast Steel WCB
- Stainless Steel CF8
- Stainless Steel CF8M
- Nickel Aluminum Bronze

ELASTOMERS:

- NR, fabric reinforced Natural Rubber
- EPDM, fabric reinforced
- NBR, fabric reinforced Nitrile Rubber

COATING:

- Rilsan Polyamide based (Nylon 11)
- Polyester based EPC
- High built Epoxy FBE
- Vitreous Enamel (internal only)

TRIM

PIPING & TUBING:

- Stainless Steel 316
- Copper/Brass
- Cupro-Nickel
- Monel®

FITTINGS:

- Stainless Steel 316
- Brass
- Super Duplex
- Cupro-Nickel
- Monel®

ACCESSORIES:

- Brass Nickel plated
- Nickel Aluminium bronze
- Stainless steel CF8M
- Monel®
- Cupro-Nickel

PLEASE SPECIFY

- Working Media
- Ambiental conditions
- Min/Max operating flow
- Min/Max operating pressure
- Downstream set pressure
- Energize to Open/Close valve
- Solenoid Voltage
- Solenoid Enclosure
- Solenoid Protection
- System installation orientation
- Additional accessories needed

For more detailed technical information, please refer to chapter Engineering Data.

TALIS FP RANGE

Modulating Deluge systems

Electric Actuated with Remote Reset, Pressure Reducing Deluge Valve

FDV - PE1

The FDV is a Fire Protection control valve for Deluge fire sprinkler systems, designed for installations in hazardous environments.
The FDV-PE1 is a pressure control Deluge system, actuated electrically and resets remotely.
An electric detection systems activates a solenoid valve through the control panel, to open the FDV deluge valve. Once open, the valve reduces the inlet high pressure to a predetermined fixed outlet pressure.
The Deluge system incorporates an emergency valve, bypassing the fire detection systems for manual operation. Designed for vertical or horizontal installation, a globe pattern, line pressure operated FDV-PE1 valve features a direct elastomeric diaphragm seal. It has no balancing spring or internal metallic wet components in the valve body. The hydrodynamic pattern design, ensures high flow rates with minimum head loss.

MARKETS

Marine | P.O.G. | Airports

TECHNICAL DATA

FLUID:
Water, Brackish water, Sea water, Foam

SIZE RANGE:
40mm to 250mm (1½" to 10")

AVAILABLE CONNECTIONS ENDS:
Flange*Flange, Groove*Groove, Flange*Groove, Groove*Flange, Thread*Thread

PRESSURE NOMINAL:
250 psi (17.2 bar)

REGULATION RATIO: 5:1

SENSITIVITY: 1.45 psi (0.1 Bar)

APPROVALS

ADVANTAGES

- Only three parts: body, diaphragm & cover plate, no wet metal spring inside the control chamber
- Full bore unobstructed
- Simple manual reset of the valve to standby position without draining or opening the valve itself, neither closing OS&Y or other valves in the system
- Open fail safe valve, maintained in stand-by closed position
- Low maintenance cost: the valve is serviced in-line and only one replaceable part which is long life elastomeric diaphragm
- Conforms with inspection, Testing and Maintenance Standard of water-based Fire Protection Systems, NFPA 25

CHARACTERISTICS

- Hydro-dynamic pattern design ensures high flowrates with minimum head loss
- The valve trips open automatically upon a gradual release of water pressure from its control chamber. The valve is actuated by an electric signal transmitted to the valve's solenoid from the main control valve panel, due to a flame heat exposure of heat detection sensors system
- Soft closing upon pressurization of the valve's control chamber, by line pressure or other independent water source prevents surges.
- A pressure reducing pilot enables a full control over the downstream pressure and ensures a steady set in a wide pressure range

The FDV-PE1 resets to stand-by close position by de-energizing the alarm system solenoid's coil through the main control panel.

Schematic drawing

Set position

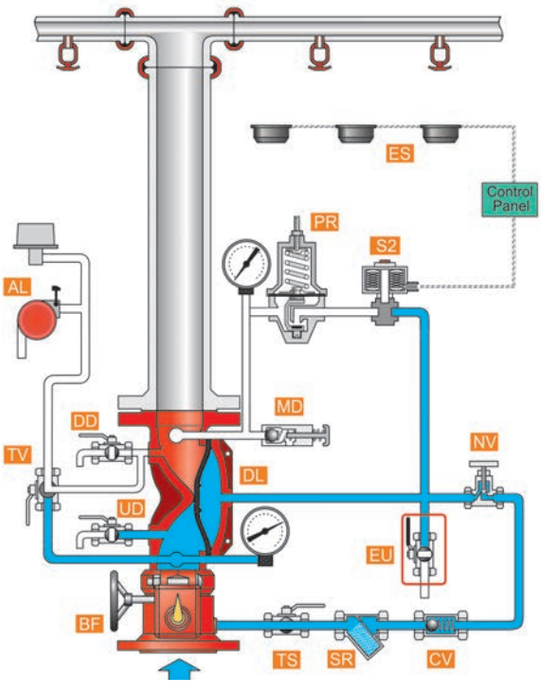

Fire position

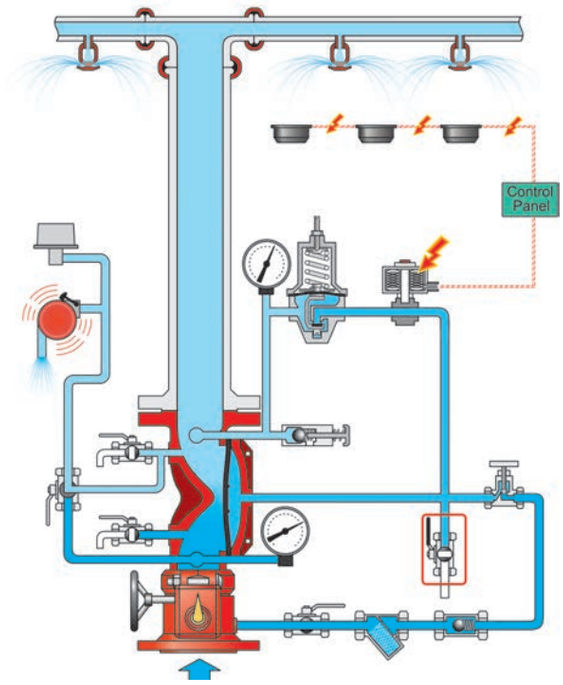

BF - Butterfly valve
DL - FDV Deluge valve
UD - Upstream drain valve
DD - Downstream drain valve
AL - Acoustic & Electric alarms
TS - Trim supply valve
SR - "Y" strainer
CV - Check valve
NV - Needle valve
PS - PSA – Pressure Supply Arrestor
MD - MADV – Manual Automatic Drain Valve
TV - Alarm test valve
EU - Emergency Manual Unit
PR - PRPV – Pressure Reducing Pilot Valve
S3 - Solenoid 2 way
ES - Electric Sensors system

OPERATION

SET position

Pressurized water in the alve's control chamber [DL] is trapped by the check valve [CV], by the closed 2 way solenoid [S2] and by the closed emergency valve [EU], maintaining the FDV deluge valve [DL] closed.

FIRE situation

When an electric detection system senses flame heat, it triggers the main control panel that in turn, transmits an electric signal, commanding the 2 way solenoid valve [S2] to open. The deluge valve's control chamber drains through the pressure reducing pilot [PR]. The FDV Deluge valve opens, admitting water to the spray sprinklers line at a steady, preset pressure.

RESET position

System reset requires the reset of the electric alarm system to de-energize and close the 2 way solenoid valve. The FDV deluge control chamber pressurizes and the valve closes.

FDV - PE1

Typical installation

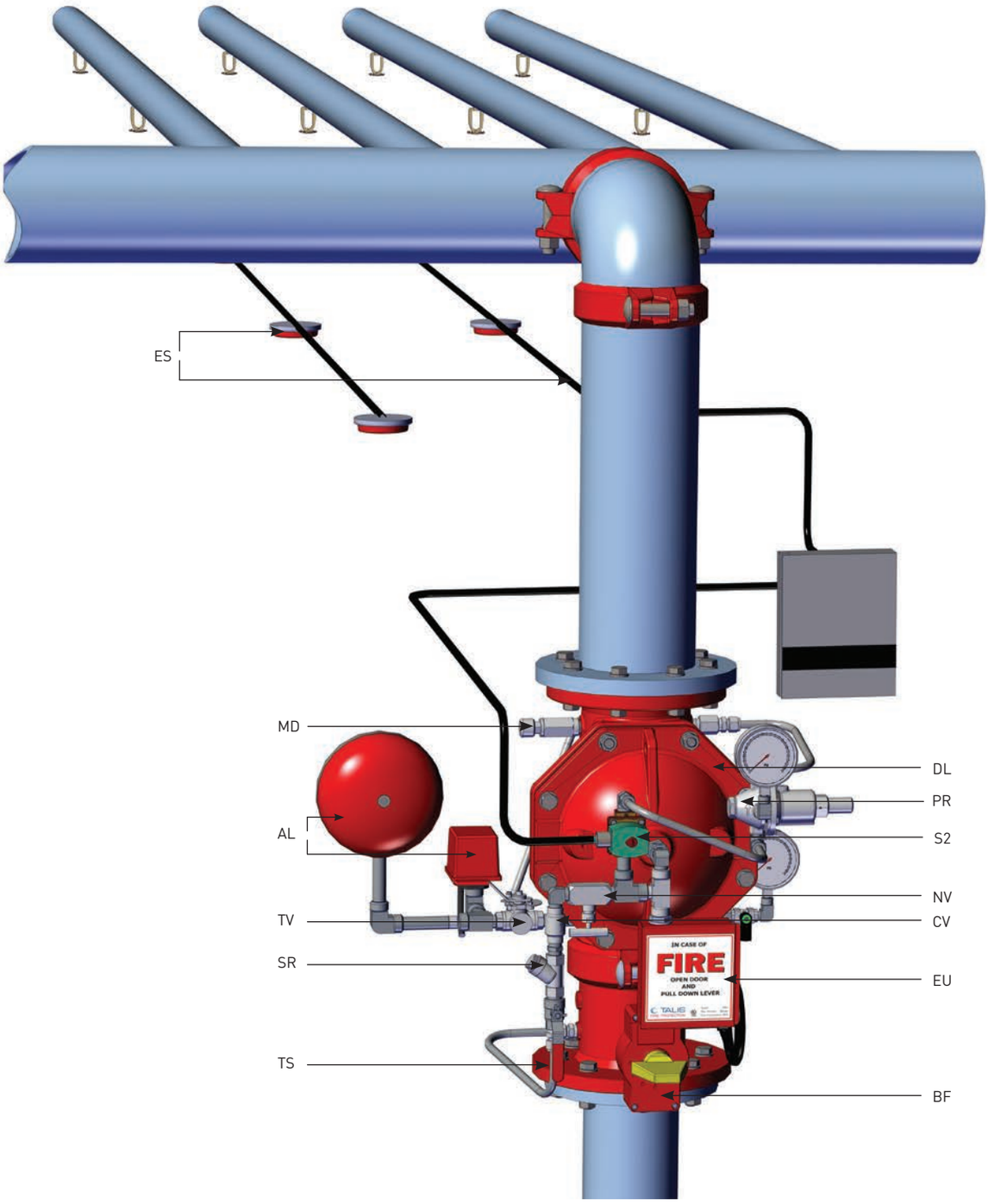

BF - Butterfly valve
DL - FDV Deluge valve
UD - Upstream drain valve
DD - Downstream drain valve
AL - Acoustic & Electric alarms
TS - Trim supply valve

SR - "Y" strainer
CV - Check valve
NV - Needle valve
PS - PSA – Pressure Supply Arrestor
MD - MADV – Manual Automatic Drain Valve

TV - Alarm test valve
EU - Emergency Manual Unit
PR - PRPV – Pressure Reducing Pilot Valve
S3 - Solenoid 2 way
ES - Electric Sensors system

Dimensions Table

Vertical

Size	1 1/2" 2"		3"		4"		6"		8"	
	mm	Inch	mm	Inch	mm	Inch	mm	Inch	mm	Inch
A	254	10.0	231	9.1	281	11.1	289	11.4	318	12.5
B	266	10.5	238	9.4	282	11.1	311	12.2	362	14.3
C	81	3.2	-	-	-	-	-	-	-	-
D	224	8.8	325	12.8	400	15.7	462	18.2	580	22.8
E	235	9.3	182	7.2	137	5.4	107	4.2	57	2.2
F	160	6.3	172	6.8	207	8.1	232	9.1	263	10.4
G	263	10.4	324	12.8	298	11.7	361	14.2	394	15.5
Kg/lb	19.7	43.4	31.2	68.8	48.9	107.8	67.5	148.8	107.3	236.6

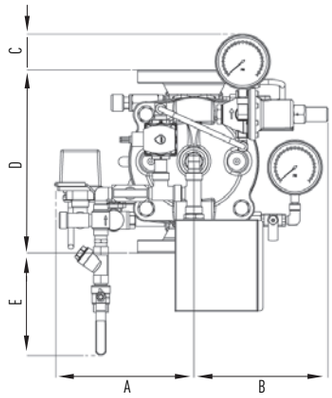

Horizontal

Size	1 1/2" 2"		3"		4"		6"		8"	
	mm	Inch	mm	Inch	mm	Inch	mm	Inch	mm	Inch
A	255	10.0	247	9.7	281	11.1	289	11.4	422	16.6
B	256	10.1	238	9.4	284	11.2	311	12.2	369	14.5
C	53	2.1	-	-	-	-	-	-	-	-
D	224	8.8	325	12.8	400	15.7	462	18.2	580	22.8
E	310	12.2	182	7.2	147	5.8	119	4.7	57	2.2
F	155	6.1	172	6.8	209	8.2	231	9.1	263	10.4
G	263	10.4	324	12.8	336	13.2	453	17.8	483	19.0
Kg/lb	19.7	43.4	31.6	69.7	48.6	107.1	67.4	148.6	148.6	235.9

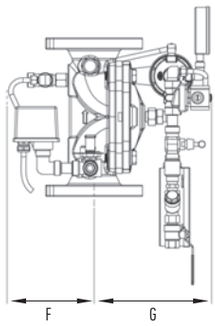

Factory Standard

MAIN VALVE:

BODY & COVER

- Ductile iron
- Cast Steel WCB
- Stainless Steel CF8
- Stainless Steel CF8M
- Nickel Aluminum Bronze

ELASTOMERS:

- NR, fabric reinforced Natural Rubber
- EPDM, fabric reinforced
- NBR, fabric reinforced Nitrile Rubber

COATING:

- Rilsan Polyamide based (Nylon 11)
- Polyester based EPC
- High built Epoxy FBE
- Vitreous Enamel (internal only)

TRIM

PIPING & TUBING:

- Stainless Steel 316
- Copper/Brass
- Cupro-Nickel
- Monel®

FITTINGS:

- Stainless Steel 316
- Brass
- Super Duplex
- Cupro-Nickel
- Monel®

ACCESSORIES:

- Brass Nickel plated
- Nickel Aluminium bronze
- Stainless steel CF8M
- Monel®
- Cupro-Nickel

PLEASE SPECIFY

- Working Media
- Ambiental conditions
- Min/Max operating flow
- Min/Max operating pressure
- Downstream set pressure
- Energize to Open/Close valve
- Solenoid Voltage
- Solenoid Enclosure
- Solenoid Protection
- Pneumatic working pressure
- System installation orientation
- Additional accessories needed

For more detailed technical information, please refer to chapter Engineering Data.

TALIS FP RANGE

Modulating Deluge systems

Pneumatic Actuated with Local Reset, Pressure Reducing Deluge Valve

FDV - PP0

The FDV is a Fire Protection control valve for Deluge fire sprinkler systems, designed for installations in hazardous environments.

The FDV-PP0 is a pressure control Deluge system, actuated pneumatically and resets locally.

When the pneumatic dry pilot fire detection line is exposed to flame heat, its automatic fire sprinklers shatter-open, venting the air pressure from the FDV-PP0's actuator, commanding the deluge valve to open. Once open, the valve reduces the inlet high pressure to a predetermined fixed outlet pressure.

The Deluge system incorporates an emergency valve, bypassing the fire detection systems for manual operation. Designed for vertical or horizontal installation, a globe pattern, line pressure operated FDV-PP0 valve features a direct elastomeric diaphragm seal. It has no balancing spring or internal metallic wet components in the valve body. The hydrodynamic pattern design, ensures high flow rates with minimum head loss.

MARKETS

Commercial, Industry, Marine, P.O.G., Residential

TECHNICAL DATA

FLUID:
Water, Brackish water, Sea water, Foam

PNEUMATICS: Air, Nitrogen

SIZE RANGE:
40mm to 250mm (1½" to 10")

AVAILABLE CONNECTIONS ENDS:
Flange*Flange, Groove*Groove, Flange*Groove, Groove*Flange, Thread*Thread

PRESSURE NOMINAL:
250 psi (17.2 bar)

REGULATION RATIO: up to 5:1

SENSITIVITY: 1.45 psi (0.1 Bar)

APPROVALS

ADVANTAGES

- Only three parts: body, diaphragm & cover plate, no wet metal spring inside the control chamber
- Full bore unobstructed
- Simple Locally manual reset of the valve to standby position without draining or opening the valve itself, neither closing OS&Y or other valves in the system
- Open fail safe valve, maintained in stand-by closed position
- Low maintenance cost: the valve is serviced in-line and only one replaceable part which is long life elastomeric diaphragm
- Conforms with inspection, Testing and Maintenance Standard of water-based Fire Protection Systems, NFPA 25

CHARACTERISTICS

- Hydro-dynamic pattern design ensures high flowrates with minimum head loss
- The valve trips open automatically upon a gradual release of water pressure from its control chamber.The valve is actuated by Dry Pilot Line's pneumatic pressure release due to its exposure to flame heat
- Soft closing upon pressurization of the valve's control chamber, by line pressure or other independent water source prevents surges
- A pressure reducing pilot enables a full control over the downstream pressure and ensures a steady set in a wide pressure range

The FDV-PP0 resets to stand-by close position by pressurizing the Dry Pilot Line and manually operating the PSA device.

Schematic drawing

Set position

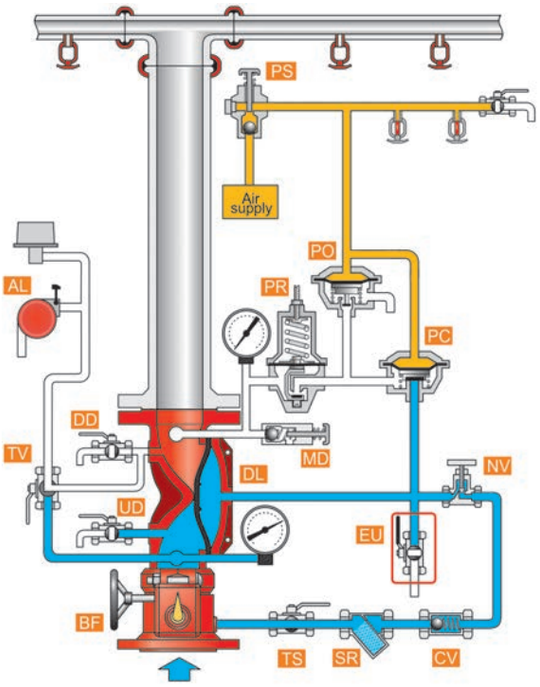

Fire position

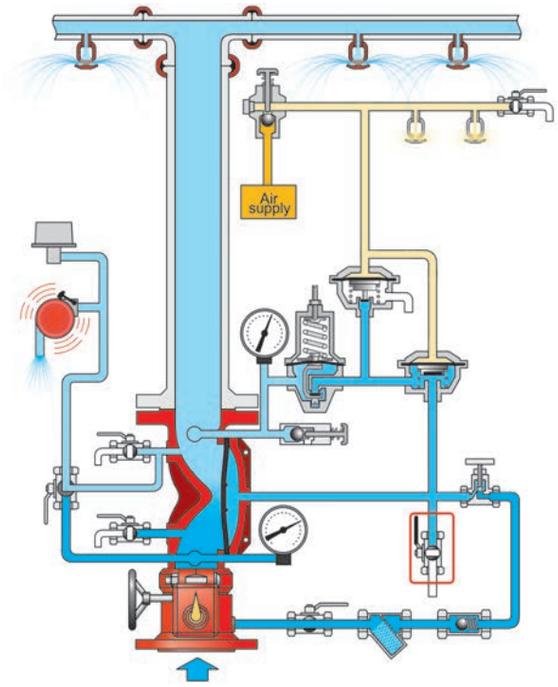

BF - Butterfly valve
DL - FDV Deluge valve
UD - Upstream drain valve
DD - Downstream drain valve
AL - Acoustic & Electric alarms
TS - Trim supply valve
SR - "Y" strainer

CV - Check valve
OR - Orifice
NV - Needle valve
PS - PSA – Pressure Supply Arrestor
MD - MADV – Manual Automatic Drain Valve
TV - Alarm test valve

EU - Emergency Manual Unit
PC - PA-PTC-Pneumatic Actuator-Pressure To Close
PO - PA-PTO - Pneumatic Actuator-Pressure To Open
PR - PRPV – Pressure Reducing Pilot Valve

OPERATION

SET position

Pressurized water in the valve's control chamber (DL) is trapped by check valve (CV), the closed PA-PTC drain actuator (PC) and by the closed emergency valve (EU), maintaining the deluge valve in its closed position.

FIRE situation

When some of the Dry pilot detection line's automatic fire sprinklers are subjected to flames heat and shatter-open, the pilot detection line depressurizes and the PA-PTC (PC) opens and drains the deluge valve's control chamber through the pressure reducing pilot (PR). The FDV deluge valve opens and admits water at set pressure to the spray sprinklers line.

RESET position

Initiating a system reset requires the replacement of all the dry pilot detection Line's shattered-open automatic fire sprinklers.The PSA (PS) push button should be pressed, to enable air supply intake to pressurize the Dry Pilot Line. By that, the PA-PTC actuator closes and upstream pressurizes the FDV deluge valve's control chamber through the needle valve (NV). Consequently, The Deluge valve closes and water spray stops.

FDV - PPO

Typical installation

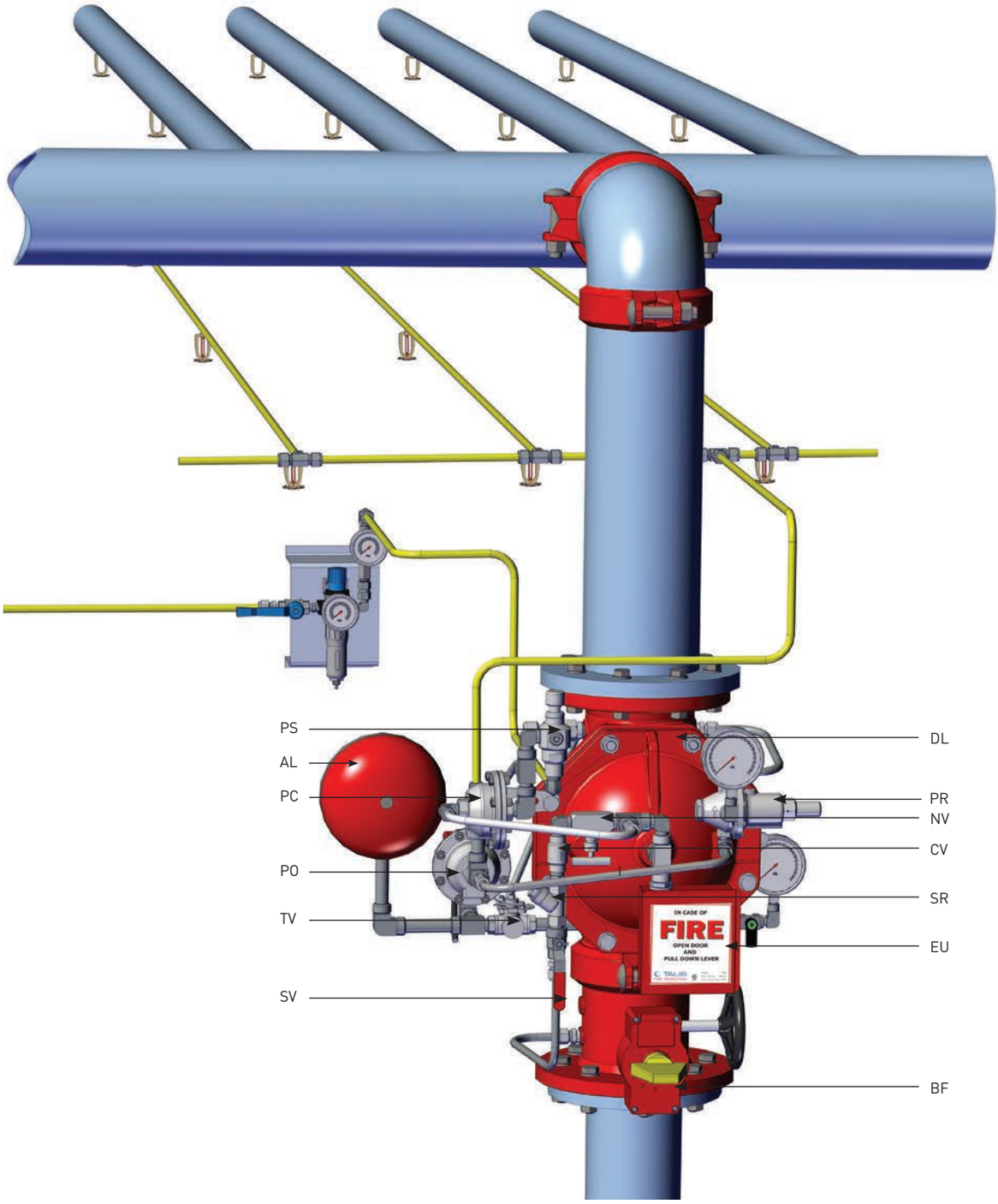

BF - Butterfly valve
DL - FDV Deluge valve
UD - Upstream drain valve
DD - Downstream drain valve
AL - Acoustic & Electric alarms
TS - Trim supply valve
SR - "Y" strainer

CV - Check valve
OR - Orifice
NV - Needle valve
PS - PSA – Pressure Supply Arrestor
MD - MADV – Manual Automatic Drain Valve
TV - Alarm test valve

EU - Emergency Manual Unit
PC - PA-PTC-Pneumatic Actuator-Pressure To Close
PO - PA-PTO - Pneumatic Actuator-Pressure To Open
PR - PRPV – Pressure Reducing Pilot Valve

Dimensions Table

Vertical

Size	1 1/2" 2"		3"		4"		6"		8"	
	mm	Inch	mm	Inch	mm	Inch	mm	Inch	mm	Inch
A	272	10.7	267	10.5	315	12.4	343	13.5	397	15.6
B	269	10.6	231	9.1	246	9.7	269	10.6	304	12
C	81	3.2	108	4.2	38	1.5	21	0.8	-	-
D	224	8.8	325	12.8	400	15.8	462	18.2	580	22.8
E	120	4.7	69	2.7	32	1.2	4	0.2	-	-
F	160	6.3	171	6.7	208	8.2	238	9.4	264	10.4
G	268	10.5	313	12.3	337	13.2	400	15.7	430	16.9
Kg/lb	25.1	55.3	37.6	82.9	55	121.2	73.6	162.3	113	249.1

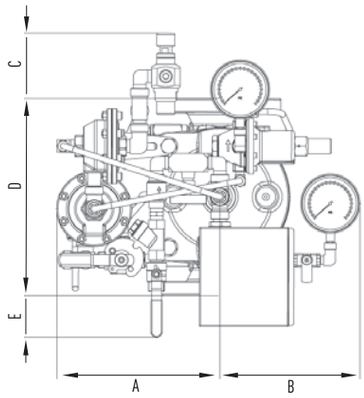

Horizontal

Size	1 1/2" 2"		3"		4"		6"		8"	
	mm	Inch	mm	Inch	mm	Inch	mm	Inch	mm	Inch
A	347	13.7	359	14.1	315	12.4	420	16.5	475	18.7
B	255	10	325	12.8	267	10.5	294	11.6	343	13.5
C	46	1.8	62	2.4	38	1.5	-	-	-	-
D	224	8.8	325	12.8	400	15.8	462	18.2	580	22.8
E	204	8	69	2.7	32	1.2	-	-	-	-
F	155	6.1	171	6.7	207	8.1	238	11.7	258	10.1
G	315	12.4	367	14.4	337	13.2	400	15.7	430	16.9
Kg/lb	25.5	56.2	38	83.8	54.8	120.8	73.8	162.7	113.2	249.6

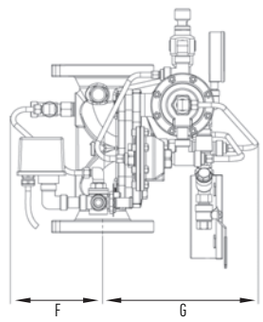

Factory Standard

MAIN VALVE:

BODY & COVER

- Ductile iron
- Cast Steel WCB
- Stainless Steel CF8
- Stainless Steel CF8M
- Nickel Aluminum Bronze

ELASTOMERS:

- NR, fabric reinforced Natural Rubber
- EPDM, fabric reinforced
- NBR, fabric reinforced Nitrile Rubber

COATING:

- Rilsan Polyamide based (Nylon 11)
- Polyester based EPC
- High built Epoxy FBE
- Vitreous Enamel (internal only)

TRIM

PIPING & TUBING:

- Stainless Steel 316
- Copper/Brass
- Cupro-Nickel
- Monel®

FITTINGS:

- Stainless Steel 316
- Brass
- Super Duplex
- Cupro-Nickel
- Monel®

ACCESSORIES:

- Brass Nickel plated
- Nickel Aluminium bronze
- Stainless steel CF8M
- Monel®
- Cupro-Nickel

PLEASE SPECIFY

- Working Media
- Ambiental conditions
- Min/Max operating flow
- Min/Max operating pressure
- Downstream set pressure
- Pneumatic working pressure
- System installation orientation
- Additional accessories needed

For more detailed technical information, please refer to chapter Engineering Data.

TALIS FP RANGE

Modulating Deluge systems

Pneumatic Actuated with Remote Reset, Pressure Reducing Deluge Valve

FDV - PP1

The FDV is a Fire Protection control valve for Deluge fire sprinkler systems, designed for installations in hazardous environments.
The FDV-PP1 is a pressure control Deluge system, actuated pneumatically and resets remotely.
When the pneumatic dry pilot fire detection line is exposed to flame heat, its automatic fire sprinklers shatter-open, venting the air pressure from the FDV-PP1's actuators, commanding the deluge valve to open. Once open, the valve reduces the inlet high pressure to a predetermined fixed outlet pressure. The Deluge system incorporates an emergency valve, bypassing the fire detection systems for manual operation.
Designed for vertical or horizontal installation, a globe pattern, line pressure operated FDV-PP1 valve features a direct elastomeric diaphragm seal. It has no balancing spring or internal metallic wet components in the valve body. The hydrodynamic pattern design, ensures high flow rates with minimum head loss.

MARKETS

Industry, Marine, Storage, P.O.G., Tunnels

TECHNICAL DATA

FLUID:
Water, Brackish water, Sea water, Foam

PNEUMATICS: Air, Nitrogen

SIZE RANGE:
40mm to 250mm (1½" to 10")

AVAILABLE CONNECTIONS ENDS:
Flange*Flange, Groove*Groove, Flange*Groove, Groove*Flange, Thread*Thread

PRESSURE NOMINAL:
250 psi (17.2 bar)

REGULATION RATIO: 5:1

SENSITIVITY: 1.45 psi (0.1 Bar)

APPROVALS

ADVANTAGES

- Only three parts: body, diaphragm & cover plate, no wet metal spring inside the control chamber
- Full bore unobstructed
- Simple reset of the valve to standby position without draining or opening the valve itself, neither closing OS&Y nor other valves in the system
- Open fail safe valve, maintained in stand-by closed position
- Low maintenance cost: the valve is serviced in-line and only one replaceable part which is long life elastomeric diaphragm
- Conforms with inspection, Testing and Maintenance Standard of water-based Fire Protection Systems, NFPA 25

CHARACTERISTICS

- Hydro-dynamic pattern design ensures high flowrates with minimum head loss
- The valve trips open automatically upon a gradual release of water pressure from its control chamber. The valve is actuated by Dry Pilot Line's pneumatic pressure release due to its exposure to flame heat
- Soft closing upon pressurization of the valve's control chamber, by line pressure or other independent water source prevents surges
- A pressure reducing pilot enables a full control over the downstream pressure and ensures a steady set in a wide pressure range

The FDV-PP1 resets to stand-by close position by pressurizing the Dry Pilot.

Schematic drawing

Set position

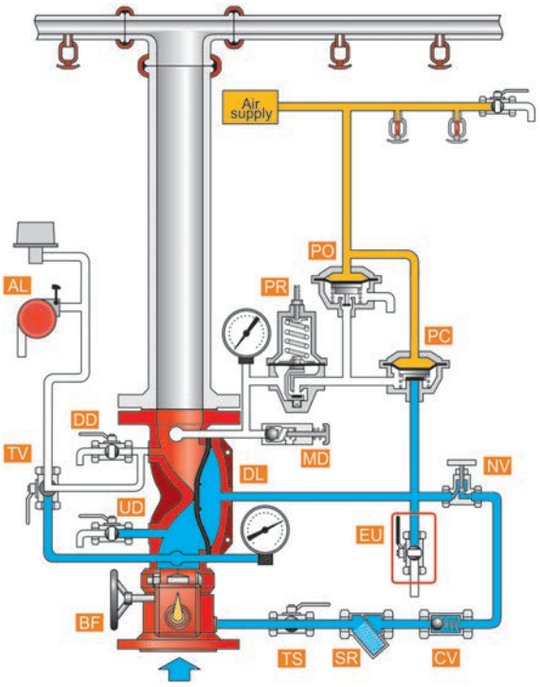

Fire position

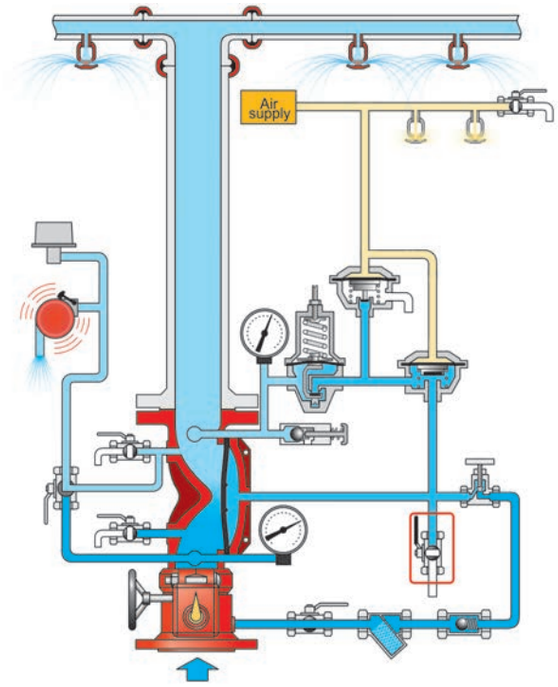

BF - Butterfly valve
DL - FDV Deluge valve
UD - Upstream drain valve
DD - Downstream drain valve
AL - Acoustic & Electric alarms
TS - Trim supply valve
SR - "Y" strainer

CV - Check valve
OR - Orifice
NV - Needle valve
MD - MADV – Manual Automatic Drain Valve
TV - Alarm test valve
EU - Emergency Manual Unit

PC - PA-PTC-Pneumatic Actuator-Pressure To Close
PO - PA-PTO - Pneumatic Actuator-Pressure To Open
PR - PRPV – Pressure Reducing Pilot ValVe

OPERATION

SET position

Pressurized water in the valve's control chamber (DL) is trapped by check valve (CV), the closed PA-PTC drain actuator (PC) and by the closed emergency valve (EU), maintaining the deluge valve in its closed position.

FIRE situation

When some of the Dry pilot detection line's automatic fire sprinklers are subjected to flames heat and shatter-open, the pilot detection line depressurizes. Consequently, the PA-PTC (PC)opens and drains the deluge valve's control chamber through the pressure reducing pilot (PR). The FDV Deluge valve opens, admitting water to the spray sprinklers line at a steady preset pressure.

RESET position

Initiating a system reset requires the replacement of all the dry pilot detection Line's shattered-open automatic fire sprinklers. Then, the Dry Pilot Line need to be pressurized to the desired set pressure. The PA-PTC actuator pressurizes, commanding the FDV deluge valve to close.

FDV - PP1

Typical installation

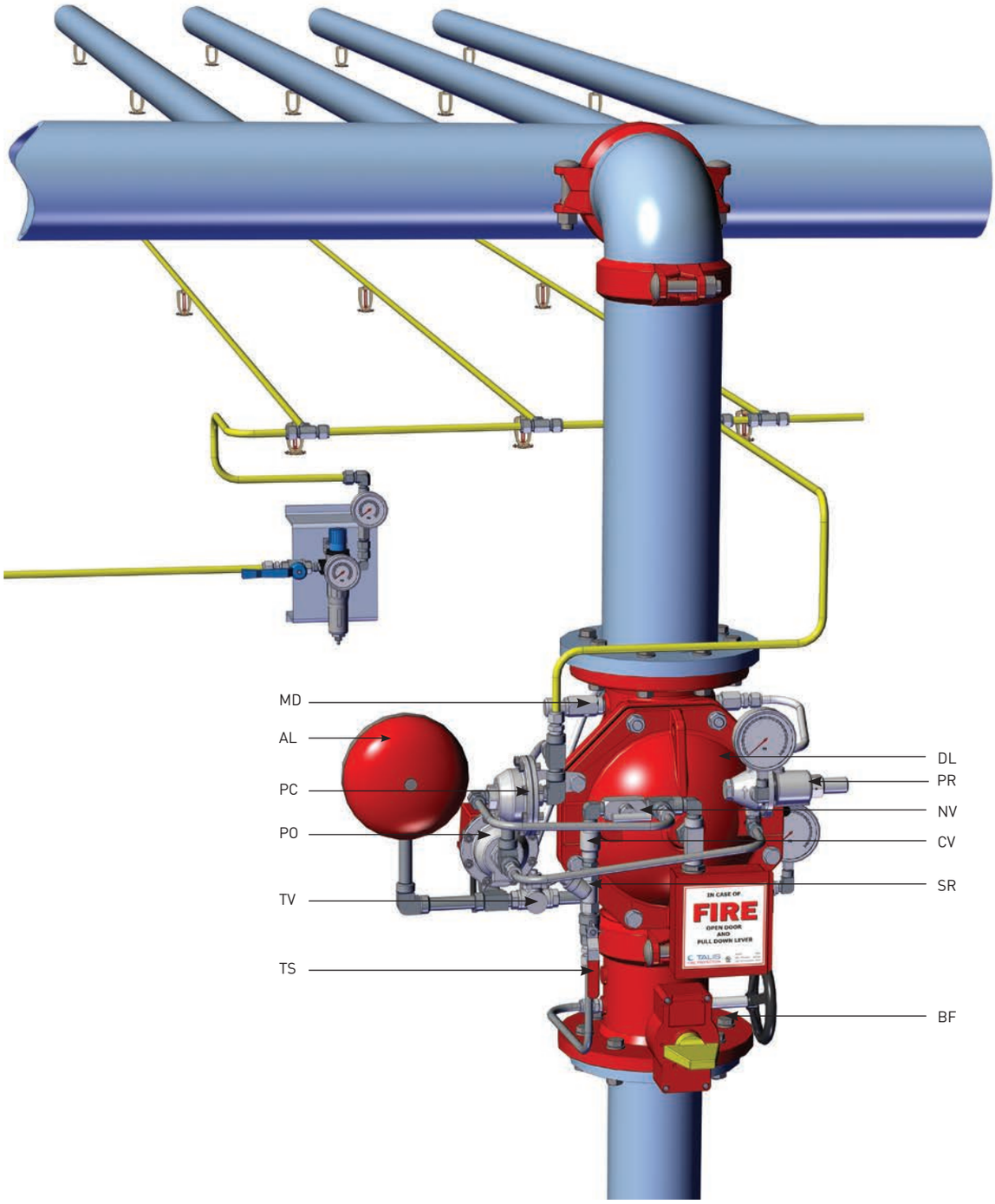

BF - Butterfly valve
DL - FDV Deluge valve
UD - Upstream drain valve
DD - Downstream drain valve
AL - Acoustic & Electric alarms
TS - Trim supply valve
SR - "Y" strainer

CV - Check valve
OR - Orifice
NV - Needle valve
MD - MADV – Manual Automatic Drain Valve
TV - Alarm test valve
EU - Emergency Manual Unit

PC - PA-PTC-Pneumatic Actuator-Pressure To Close
PO - PA-PTO - Pneumatic Actuator-Pressure To Open
PR - PRPV – Pressure Reducing Pilot Vale

Dimensions Table

Vertical

Size	1 1/2" 2"		3"		4"		6"		8"	
	mm	Inch	mm	Inch	mm	Inch	mm	Inch	mm	Inch
A	368	14.5	269	10.6	315	12.4	341	13.4	396	15.6
B	266	10.5	228	9	243	9.5	266	10.5	304	12
C	94	3.7	75	2.9	-	-	-	-	-	-
D	224	8.8	325	12.8	400	15.8	462	18.2	580	22.8
E	195	7.7	69	2.7	32	1.3	-	-	-	-
F	125	4.9	204	8	207	8	230	9	259	10.2
G	301	11.8	367	14.4	355	14	400	15.7	430	16.9
Kg/lb	24.6	54.2	36.7	80.9	54.1	119.2	72.4	159.6	112.2	247.4

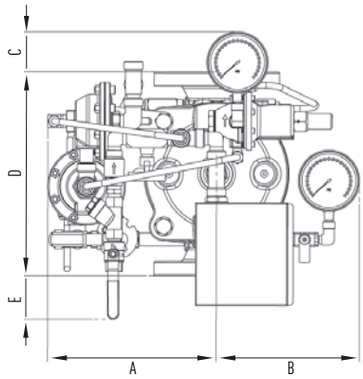

Horizontal

Size	1 1/2" 2"		3"		4"		6"		8"	
	mm	Inch	mm	Inch	mm	Inch	mm	Inch	mm	Inch
A	368	14.5	381	15	296	11.6	428	16.8	430	16.9
B	236	9.3	199	7.8	267	10.5	296	11.6	344	13.5
C	6.5	0.3	75	3	5	0.2	-	-	-	-
D	224	8.8	325	12.8	400	15.8	462	18.2	580	22.8
E	204	8	69	2.7	22	0.9	6	0.2	-	-
F	163	6.4	187	7.4	207	81	220	8.7	256	10
G	301	11.8	389	15.3	361	14.2	400	15.7	430	16.9
Kg/lb	24.5	54	36.9	81.3	53.8	118.6	72.4	159.6	112.3	247.6

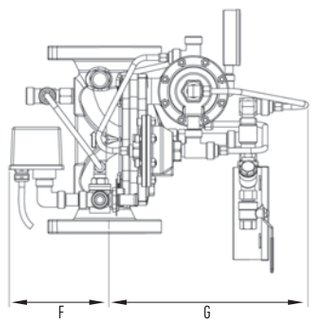

Factory Standard

MAIN VALVE:

BODY & COVER

- Ductile iron
- Cast Steel WCB
- Stainless Steel CF8
- Stainless Steel CF8M
- Nickel Aluminum Bronze

ELASTOMERS:

- NR, fabric reinforced Natural Rubber
- EPDM, fabric reinforced
- NBR, fabric reinforced Nitrile Rubber

COATING:

- Rilsan Polyamide based (Nylon 11)
- Polyester based EPC
- High built Epoxy FBE
- Vitreous Enamel (internal only)

TRIM

PIPING & TUBING:

- Stainless Steel 316
- Copper/Brass
- Cupro-Nickel
- Monel®

FITTINGS:

- Stainless Steel 316
- Brass
- Super Duplex
- Cupro-Nickel
- Monel®

ACCESSORIES:

- Brass Nickel plated
- Nickel Aluminium bronze
- Stainless steel CF8M
- Monel®
- Cupro-Nickel

PLEASE SPECIFY

- Working Media
- Ambiental conditions
- Min/Max operating flow
- Min/Max operating pressure
- Downstream set pressure
- Pneumatic working pressure
- System installation orientation
- Additional accessories needed

For more detailed technical information, please refer to chapter Engineering Data.

TALIS FP RANGE

Modulating Deluge systems

Electro-Pneumatic Actuated with Local reset, Pressure Reducing Deluge Valve

FDV - PC0

The FDV is a Fire Protection control valve for Deluge fire sprinkler systems, designed for installations in hazardous environments.

The FDV-PC0 is a pressure control Deluge system, actuated electricallyor pneumatically and resets locally.

Two fire detection systems, can independently activate an actuator to open the deluge valve: a pneumatic Dry Pilot detection Line and/or an electric solenoid, connected to sensorst hrough a control panel.

Once open, the valve reduces the inlet high pressure to a predetermined fixed outlet pressure. The Deluge system incorporates an emergency valve, bypassing the fire detection systems for manual operation.

Designed for vertical or horizontal installation, a globe pattern, line pressure operated FDV-PC0 valve features a direct elastomeric diaphragm seal. It has no balancing spring or internal metallic wet components in the valve body. The hydrodynamic pattern design ensures high flow rates with minimum head loss.

MARKETS

Commercial
Industry
Storage
P.O.G.

TECHNICAL DATA

FLUID:
Water, Brackish water, Sea water, Foam

PNEUMATICS: Air, Nitrogen

SIZE RANGE:
40mm to 250mm (1½" to 10")

AVAILABLE CONNECTIONS ENDS:
Flange*Flange, Groove*Groove, Flange*Groove, Groove*Flange, Thread*Thread

PRESSURE NOMINAL:
250 psi (17.2 bar)

REGULATION RATIO: 5:1

SENSITIVITY: 1.45 psi (0.1 Bar)

APPROVALS

ADVANTAGES

- Only three parts: body, diaphragm & cover plate, no wet metal spring inside the control chamber
- Full bore unobstructed
- Simple manual reset of the valve to standby position without draining or opening the valve itself, neither closing OS&Y or other valves in the system
- Open fail safe valve, maintained in stand-by closed position
- Low maintenance cost: the valve is serviced in-line and only one replaceable part which is long life elastomeric diaphragm
- Conforms with inspection, Testing and Maintenance Standard of water-based Fire Protection Systems, NFPA 25

CHARACTERISTICS

- Hydro-dynamic pattern design ensures high flowrates with minimum head loss
- The valve trips open automatically upon a gradual release of water pressure from its control chamber. The valve is actuated by an electric signal conveyed to the valve's solenoid or by Dry Pilot Line's pneumatic pressure release due to its exposure to flame heat
- Soft closing upon pressurization of the valve's control chamber, by line pressure or other independent water source prevents surges
- A pressure reducing pilot enables a full control over the downstream pressure and ensures a steady set in a wide pressure range

The FDV-PC0 resets to stand-by close position by de-energizing the alarm system solenoid's coil through the main control panel or, pressurizing the Dry Pilot Line and manually operating the PSA device - in accordance with the relevant triggered alarm system.

Schematic drawing

Set position

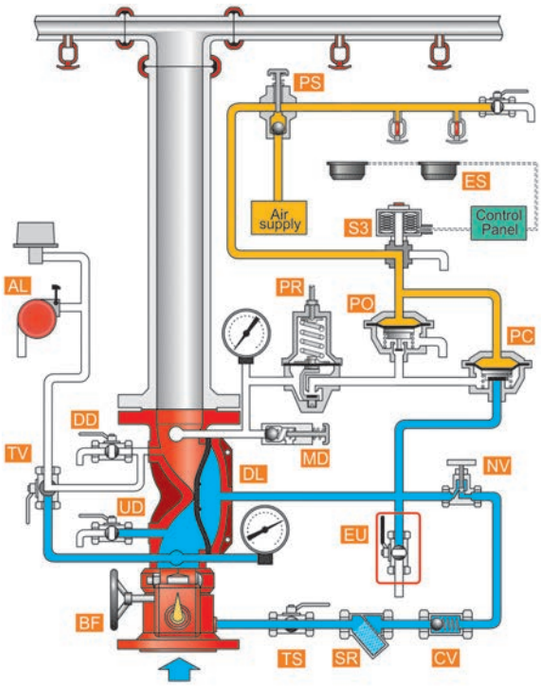

Fire position

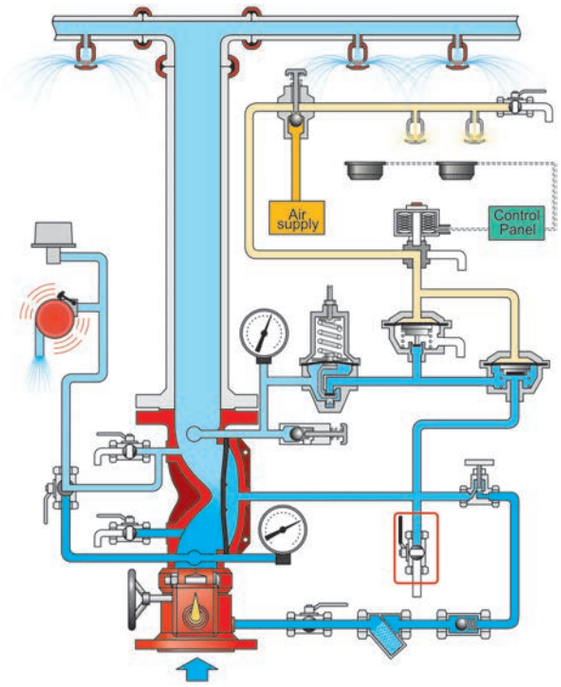

BF - Butterfly valve
DL - FDV Deluge valve
UD - Upstream drain valve
DD - Downstream drain valve
AL - Acoustic & Electric alarms
TS - Trim supply valve
SR - "Y" strainer
CV - Check valve
NV - Needle valve
OR - Orifice
PS - PSA - Pressure Supply Arrestor
MD - MADV – Manual Automatic Drain Valve
TV - Alarm test valve
EU - Emergency Manual Unit
PC - PA-PTC – Pneumatic Actuator-Pressure To Close
PO - PA-PTO – Pneumatic Actuator-Pressure To Open
PR - PRPV – Pressure Reducing Pilot Valve
S3 - Solenoid 3 way
ES - Electric Sensors system

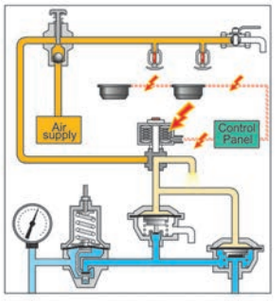

OPERATION

SET position

Pressurized water in the valve's control chamber (DL) is trapped by Closed PSA (PA), the closed PA-PTC actuator (PC) and by the closed emergency valve (EU). The pneumatic pressure accumulated in the Dry pilot line is conveyed to the PA-PT Ccontrol chamber through the 3 way solenoid (S3), maintaining the deluge valve in its closed position.

FIRE situation

When some of the Dry pilot detection line's automatic fire sprinklers are subjected to the predetermined temperature levels and shutter-open, the pilot line and the PA-PTC control chamber depressurize. Alternatively, an electric detection system senses heat and triggers the main control board that in turn, energizes the 3 way solenoid valve (S3).
The solenoid valve bypasses the dry pilot detection line depressurizing the PA-PTC.The FDV-DC0's control chamber is then drained and the Deluge valve opensthrough the pressure reducing pilot (PR), admitting water to the spray sprinklers line at a steady preset pressure.

RESET position

Initiating a system reset requires the replacement of all shattered-open fire sprinklers in the Wet Pilot detection line. Alternatively, the electrical alarm system has to be reset and the solenoid de-energized. The PSA (PS) push button should be pressed and the Dry Pilot Valve pressurized. Consequently, The PA-PTC pressurizes and closes the FDV deluge valve.

FDV - PC0

Typical installation

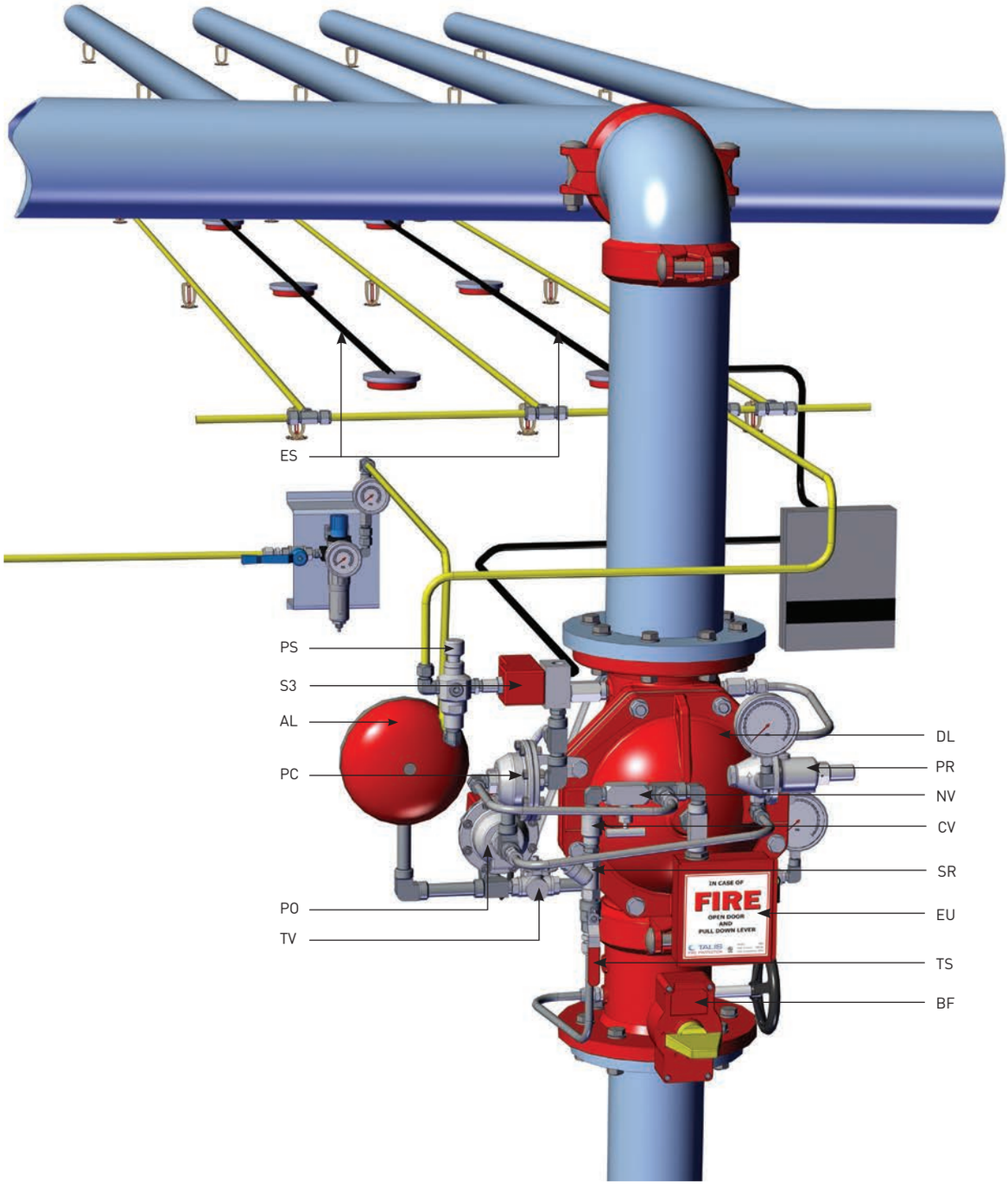

BF - Butterfly valve
DL - FDV Deluge valve
UD - Upstream drain valve
DD - Downstream drain valve
AL - Acoustic & Electric alarms
TS - Trim supply valve
SR - "Y" strainer
CV - Check valve

NV - Needle valve
OR - Orifice
PS - PSA - Pressure Supply Arrestor
MD - MADV – Manual Automatic Drain Valve
TV - Alarm test valve
EU - Emergency Manual Unit

PC - PA-PTC – Pneumatic Actuator-Pressure To Close
PO - PA-PTO – Pneumatic Actuator-Pressure To Open
PR - PRPV – Pressure Reducing Pilot Valve
S3 - Solenoid 3 way
ES - Electric Sensors system

Dimensions Table

Vertical

Size	1 1/2" 2"		3"		4"		6"		8"	
	mm	Inch	mm	Inch	mm	Inch	mm	Inch	mm	Inch
A	283	11.1	315	12.4	393	15.5	388	15.3	442	17.4
B	268	10.5	300	11.8	284	11.2	269	10.6	304	12
C	121	4.8	141	5.5	71	2.8	54	2.1	16	0.6
D	224	8.8	325	12.8	401	15.8	462	18.2	580	22.8
E	205	8	69	2.7	118	4.6	3	0.1	-	-
F	145	5.7	172	6.8	206	8.1	232	9.1	258	10.1
G	306	12	300	11.8	345	13.6	400	15.7	430	16.9
Kg/lb	26.9	59.3	39.1	86.2	56.4	124.3	75	165.3	114.5	252.4

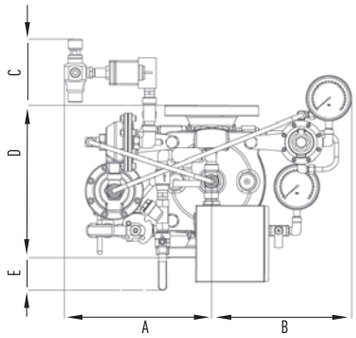

Horizontal

Size	1 1/2" 2"		3"		4"		6"		8"	
	mm	Inch	mm	Inch	mm	Inch	mm	Inch	mm	Inch
A	369	14.5	359	30.7	373	14.7	420	16.5	453	17.8
B	239	9.4	271	10.7	274	10.8	301	11.8	349	13.7
C	64	2.5	102	4	32	1.2	19	0.7	-	-
D	224	8.8	325	12.8	401	15.8	462	18.2	580	22.8
E	205	8	69	2.7	32	1.2	3	0.1	-	-
F	160	6.3	172	6.8	207	8.1	232	9.1	258	10.2
G	300	11.8	367	14.5	361	14.2	400	15.7	430	17
Kg/lb	26.8	59	39.6	87.3	56.1	123.7	75	165.3	114.6	256.6

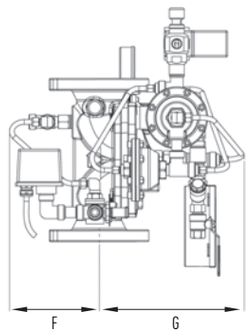

Factory Standard

MAIN VALVE:

BODY & COVER

- Ductile iron
- Cast Steel WCB
- Stainless Steel CF8
- Stainless Steel CF8M
- Nickel Aluminum Bronze

ELASTOMERS:

- NR, fabric reinforced Natural Rubber
- EPDM, fabric reinforced
- NBR, fabric reinforced Nitrile Rubber

COATING:

- Rilsan Polyamide based (Nylon 11)
- Polyester based EPC
- High built Epoxy FBE
- Vitreous Enamel (internal only)

TRIM

PIPING & TUBING:

- Stainless Steel 316
- Copper/Brass
- Cupro-Nickel
- Monel®

FITTINGS:

- Stainless Steel 316
- Brass
- Super Duplex
- Cupro-Nickel
- Monel®

ACCESSORIES:

- Brass Nickel plated
- Nickel Aluminium bronze
- Stainless steel CF8M
- Monel®
- Cupro-Nickel

PLEASE SPECIFY

- Working Media
- Ambiental conditions
- Min/Max operating flow
- Min/Max operating pressure
- Downstream set pressure
- Solenoid Voltage
- Solenoid Enclosure
- Solenoid Protection
- Pneumatic working pressure
- System installation orientation
- Additional accessories needed

For more detailed technical information, please refer to chapter Engineering Data.

TALIS FP RANGE

Modulating Deluge systems

Electro-Pneumatic Actuated with Remote reset, Pressure Reducing Deluge Valve

FDV - PC1

The FDV is a Fire Protection control valve for Deluge fire sprinkler systems, designed for installations in hazardous environments.

The FDV-PC1 is a pressure control Deluge system, actuated electrically or pneumatically and can be reset from a remote location.

Two fire detection systems, can independently activate an actuator to open the deluge valve: a pneumatic Dry Pilot detection Line and/or an electric solenoid, connected to sensors through a control Panel. Once open, the valve reduces the inlet high pressure to a predetermined fixed outlet pressure. The Deluge system incorporates an emergency valve, bypassing the fire detection systems for manual operation.

Designed for vertical or horizontal installation, a globe pattern, line pressure operated FDV-PC1 valve features a direct elastomeric diaphragm seal. It has no balancing spring or internal metallic wet components in the valve body. The hydrodynamic pattern design, ensures high flow rates with minimum head loss.

MARKETS

Industry, Marine, Storage, P.O.G., Tunnels, Airports

TECHNICAL DATA

FLUID:
Water, Brackish water, Sea water, Foam

PNEUMATICS: Air, Nitrogen

SIZE RANGE:
40mm to 250mm (1½" to 10")

AVAILABLE CONNECTIONS ENDS:
Flange*Flange, Groove*Groove, Flange*Groove, Groove*Flange, Thread*Thread

PRESSURE NOMINAL:
250 psi (17.2 bar)

REGULATION RATIO: 5:1

SENSITIVITY: 1.45 psi (0.1 Bar)

APPROVALS

ADVANTAGES

- Only three parts: body, diaphragm & cover plate, no wet metal spring inside the control chamber
- Full bore unobstructed
- Simple manual reset of the valve to standby position without draining or opening the valve itself, neither closing OS&Y or other valves in the system
- Open fail safe valve, maintained in stand-by closed position
- Low maintenance cost: the valve is serviced in-line and only one replaceable part which is long life elastomeric diaphragm
- Conforms with inspection, Testing and Maintenance Standard of water-based Fire Protection Systems, NFPA 25

CHARACTERISTICS

- Hydro-dynamic pattern design ensures high flowrates with minimum head loss
- The valve trips open automatically upon a gradual release of water pressure from its control chamber. The valve is actuated by an electric signal conveyed to the valve's solenoid or by Dry Pilot Line's pneumatic pressure release due to its exposure to flame heat
- Soft closing upon pressurization of the valve's control chamber, by line pressure or other independent water source prevents surges
- A pressure reducing pilot enables a full control over the downstream pressure and ensures a steady set in a wide pressure range

The FDV-PC1 resets to stand-by close position by de-energizing the alarm system solenoid's coil through the main control panel or, pressurizing the Dry Pilot Line.

Schematic drawing

Set position

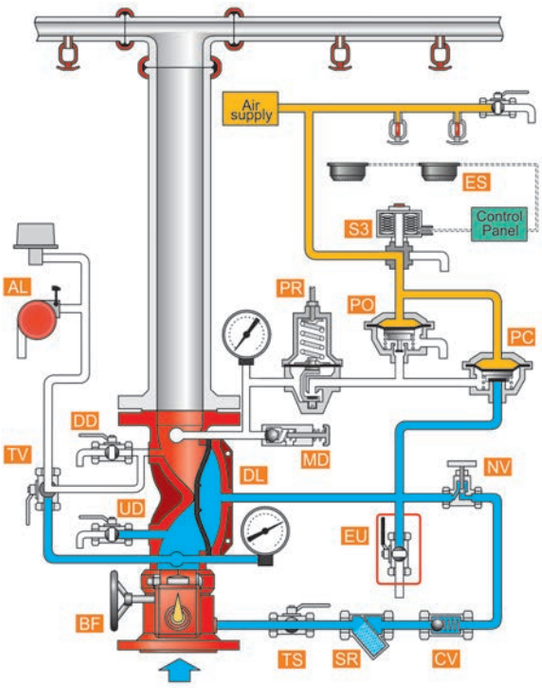

Fire position

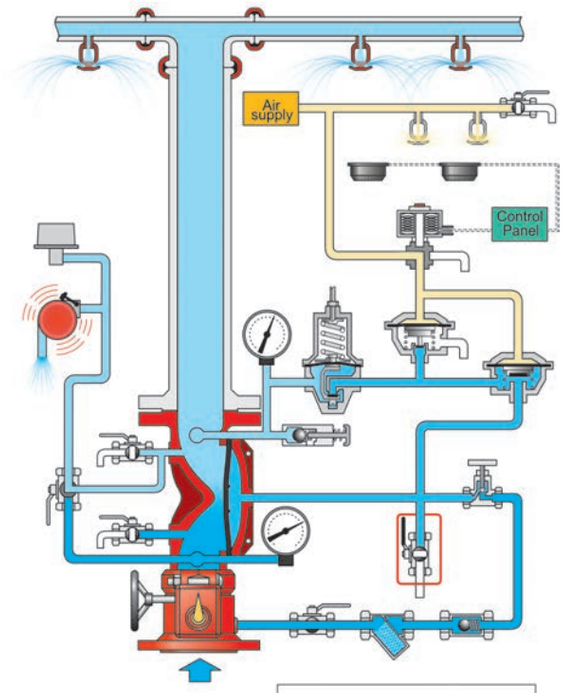

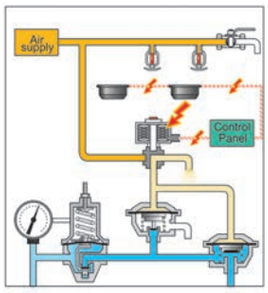

BF - Butterfly valve
DL - FDV Deluge valve
UD - Upstream drain valve
DD - Downstream drain valve
AL - Acoustic & Electric alarms
TS - Trim supply valve
SR - "Y" strainer
CV - Check valve
OR - Orifice
NV - Needle valve

MD - MADV – Manual Automatic Drain Valve
TV - Alarm test valve
EU - Emergency Manual Unit
PC - PA-PTC – Pneumatic Actuator-Pressure To Close
PO - PA-PTO – Pneumatic Actuator-Pressure To Open
PR - PRPV – Pressure Reducing Pilot Valve
S3 - Solenoid 3 way
ES - Electric Sensors system

OPERATION

SET position

Pressurized water in the valve's control chamber (DL) is trapped by the check valve (CV) the closed PA-PTC pneumatic actuator (PC) and by the closed emergency valve (EU). The pneumatic pressure accumulated in the Dry pilot line is conveyed to the PA-PTC through the 3 way solenoid (S3), maintaining the deluge valve in its closed position.

FIRE situation

When some of the Dry Pilot detection line's automatic fire sprinklers are subjected to the predetermined temperature levels and shutter-open, the pilot line and the PA-PTC control chamber depressurize.
Alternatively, an electric detection system senses heat and triggers the main control board that in turn, energizes the 3 way solenoid valve (S3). The solenoid valve bypasses the Dry Pilot detection line depressurizing the PA-PTC. The FDV-DC1's control chamber is then drained and the deluge valve opens through the pressure reducing pilot (PR), admitting water to the spray sprinklers line at a steady preset pressure.

RESET position

Initiating a system reset requires the replacement of all shattered-open fire sprinklers in the Wet Pilot detection line. Alternatively, the electrical alarm system has to be reset and the solenoid de-energized. The Dry Pilot Valve is pressurized, and consequently the PA-PTC actuator pressurizes and closes the FDV deluge valve.

FDV - PC1

Typical installation

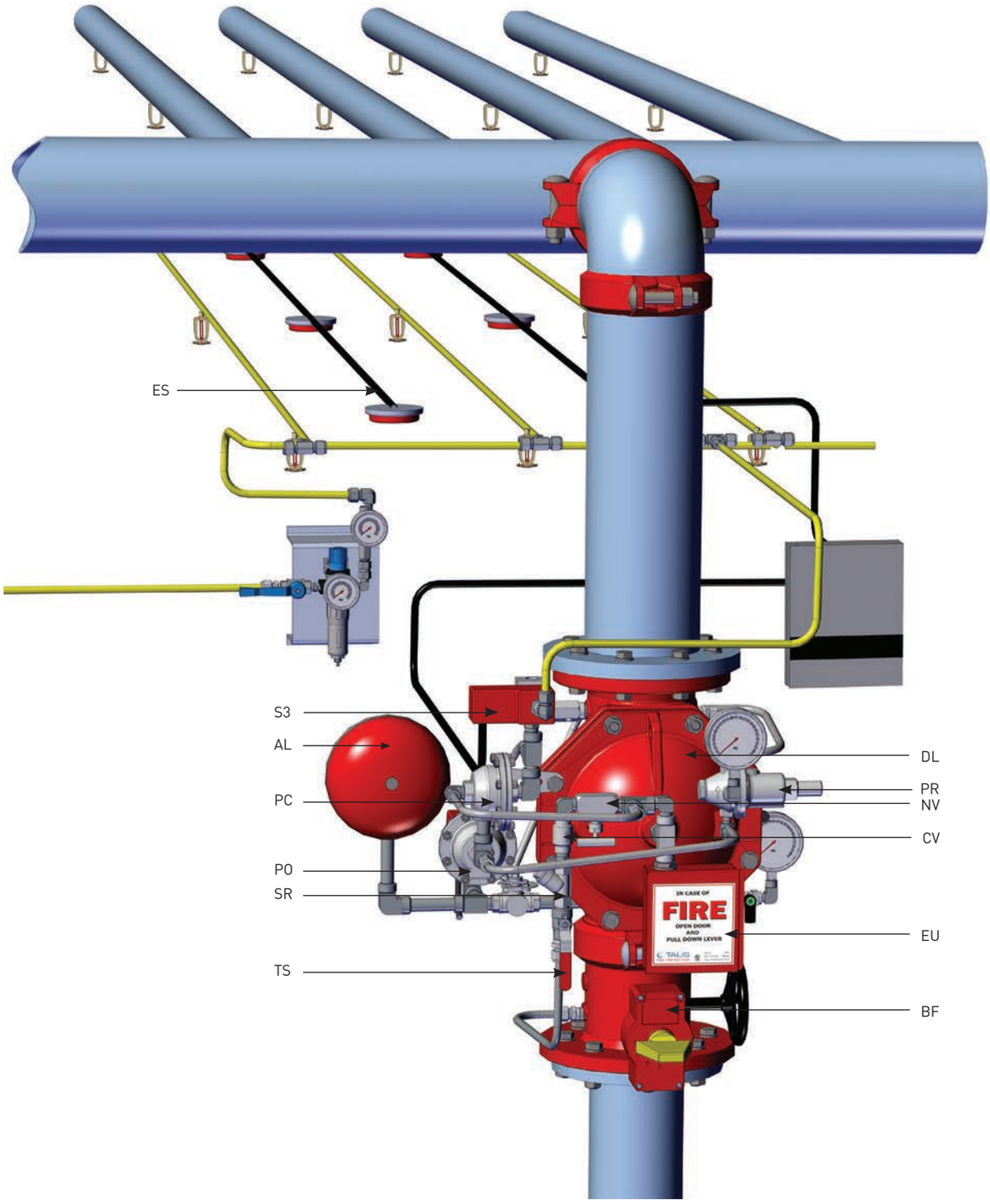

BF - Butterfly valve
DL - FDV Deluge valve
UD - Upstream drain valve
DD - Downstream drain valve
AL - Acoustic & Electric alarms
TS - Trim supply valve
SR - "Y" strainer

CV - Check valve
OR - Orifice
NV - Needle valve
MD - MADV – Manual Automatic Drain Valve
TV - Alarm test valve
EU - Emergency Manual Unit

PC - PA-PTC – Pneumatic Actuator-Pressure To Close
PO - PA-PTO – Pneumatic Actuator-Pressure To Open
PR - PRPV – Pressure Reducing Pilot Valve
S3 - Solenoid 3 way
ES - Electric Sensors system

Dimensions Table

Vertical

Size	1 1/2" 2"		3"		4"		6"		8"	
	mm	Inch	mm	Inch	mm	Inch	mm	Inch	mm	Inch
A	346	13.6	270	10.6	322	14	344	13.5	398	15.7
B	268	10.5	238	9.4	284	11.2	266	10.5	280	11
C	95	3.7	151	5.9	31	1.2	-	-	-	-
D	224	8.8	325	12.8	400	15.8	462	18.2	580	11
E	205	8	69	2.7	31	1.2	4	0.1	-	-
F	164	6.5	170	6.7	207	8.1	230	9	255	10
G	299	11.8	367	14.5	354	13.9	400	15.8	429	16.9
Kg/lb	25.9	57.1	37.9	83.6	55.2	121.7	73.6	162.3	113.2	249.6

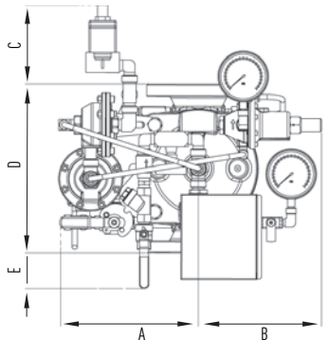

Horizontal

Size	1 1/2" 2"		3"		4"		6"		8"	
	mm	Inch	mm	Inch	mm	Inch	mm	Inch	mm	Inch
A	368	14.3	382	15	395	15.5	422	16.6	424	16.7
B	254	10	199	7.8	213	8.4	295	11.6	318	12.5
C	59	2.3	153	6	33	1.3	15	0.6	-	-
D	224	8.8	325	12.8	400	15.8	462	18.2	580	22.8
E	207	8.1	68	2.7	31	1.2	6	0.2	-	-
F	163	6.4	190	7.5	208	8.2	232	9.1	260	10.2
G	299	11.8	367	14.5	353	13.9	400	15.7	429	16.9
Kg/lb	25.7	56.7	38.1	84	54.9	121	73.6	162.3	113.4	250

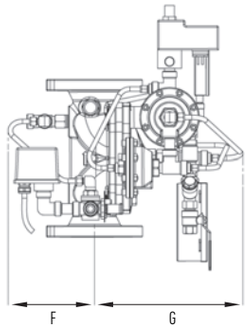

Factory Standard

MAIN VALVE:

BODY & COVER

- Ductile iron
- Cast Steel WCB
- Stainless Steel CF8
- Stainless Steel CF8M
- Nickel Aluminum Bronze

ELASTOMERS:

- NR, fabric reinforced Natural Rubber
- EPDM, fabric reinforced
- NBR, fabric reinforced Nitrile Rubber

COATING:

- Rilsan Polyamide based (Nylon 11)
- Polyester based EPC
- High built Epoxy FBE
- Vitreous Enamel (internal only)

TRIM

PIPING & TUBING:

- Stainless Steel 316
- Copper/Brass
- Cupro-Nickel
- Monel®

FITTINGS:

- Stainless Steel 316
- Brass
- Super Duplex
- Cupro-Nickel
- Monel®

ACCESSORIES:

- Brass Nickel plated
- Nickel Aluminium bronze
- Stainless steel CF8M
- Monel®
- Cupro-Nickel

PLEASE SPECIFY

- Working Media
- Ambiental conditions
- Min/Max operating flow
- Min/Max operating pressure
- Downstream set pressure
- Energize to Open/Close valve
- Solenoid Voltage
- Solenoid Enclosure
- Solenoid Protection
- Pneumatic working pressure
- System installation orientation
- Additional accessories needed

For more detailed technical information, please refer to chapter Engineering Data.

TALIS FP RANGE

Modulating Deluge systems

Hydraulic Actuated with Local Reset, Pressure Reducing Deluge Valve

FDV - PH0

The FDV is a Fire Protection control valve for Deluge fire sprinkler systems, designed for installations in hazardous environments.
The FDV-PH0 is a pressure control Deluge system, actuated hydraulically and resets locally.
When a hydraulic detection system, a Wet Pilot detection Line, is exposed to a predetermined temperature level, its automatic fire sprinklers shatter open, commanding the FDV-PH0 deluge valve to open. Once open, the valve reduces the inlet high pressure to a predetermined fixed outlet pressure. The Deluge system incorporates an emergency valve, bypassing the fire detection system for manual operation.
Designed for vertical or horizontal installation, a globe pattern, line pressure operated FDV-PH0 valve features a direct elastomeric diaphragm seal. It has no balancing spring or internal metallic wet components in the valve body. The hydrodynamic pattern design, ensures high flow rates with minimum head loss.

MARKETS

Commercial · Marine · Residential

TECHNICAL DATA

FLUID:
Water, Brackish water, Sea water, Foam

SIZE RANGE:
40mm to 250mm (1½" to 10")

AVAILABLE CONNECTIONS ENDS:
Flange*Flange, Groove*Groove, Flange*Groove, Groove*Flange, Thread*Thread

PRESSURE NOMINAL:
250 psi (17.2 bar)

REGULATION RATIO: 5:1

SENSITIVITY: 1.45 psi (0.1 Bar)

APPROVALS

ADVANTAGES

- Only three parts: body, diaphragm & cover plate, no wet metal spring inside the control chamber
- Full bore unobstructed
- Simple manual reset of the valve to standby position without draining or opening the valve itself, neither closing OS&Y or other valves in the system
- Open fail safe valve, maintained in stand-by closed position
- Low maintenance cost: the valve is serviced in-line and only one replaceable part which is long life elastomeric diaphragm
- Conforms with inspection, Testing and Maintenance Standard of water-based Fire Protection Systems, NFPA 25

CHARACTERISTICS

- Hydro-dynamic pattern design ensures high flowrates with minimum head loss
- The valve trips open automatically upon a gradual release of water pressure from its control chamber. The valve is actuated by a Wet Pilot Line's hydraulic pressure release due to its exposure to flame heat
- Soft closing upon pressurization of the valve's control chamber, by line pressure or other independent water source prevents surges
- A pressure reducing pilot enables a full control over the downstream pressure and ensures a steady set in a wide pressure range

The FDV-PH0 resets to stand-by close position by pressurizing the Dry Pilot Line and manually operating the PSA device.

Schematic drawing

Set position

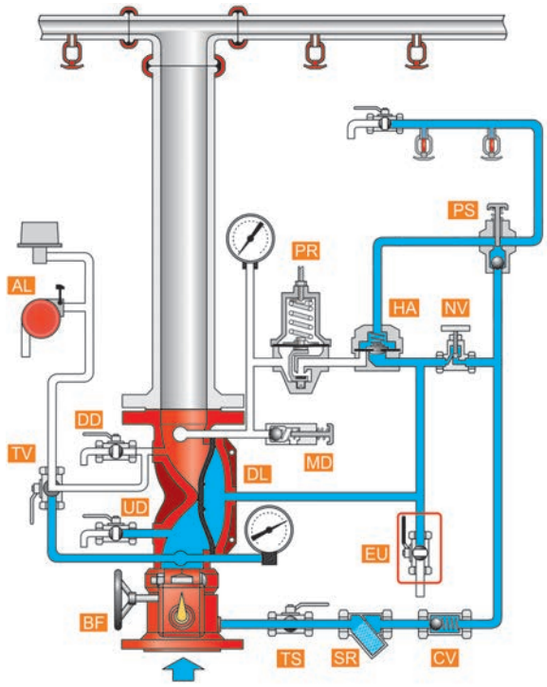

Fire position

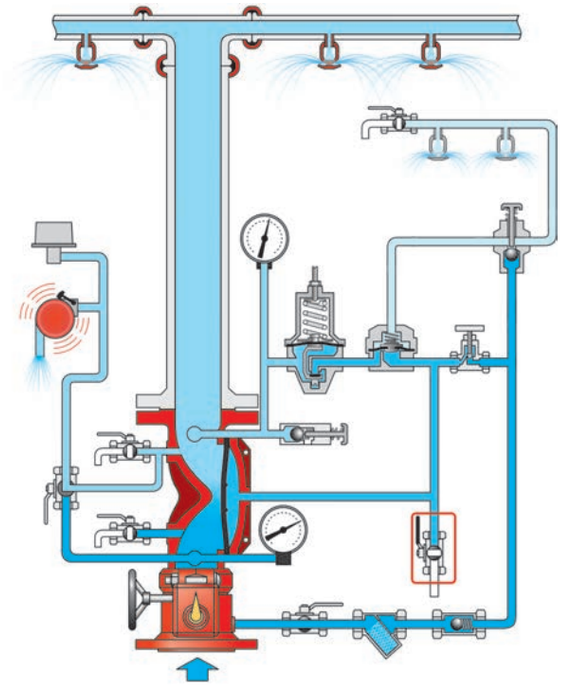

BF - Butterfly valve
DL - FDV Deluge valve
UD - Upstream drain valve
DD - Downstream drain valve
AL - Acoustic & Electric alarms
TS - Trim supply valve
SR - "Y" strainer
CV - Check valve
NV - Needle valve
PS - PSA – Pressure Supply Arrestor
MD - MADV – Manual Automatic Drain Valve
TV - Alarm test valve
EU - Emergency Manual Unit
HA - HAV-2 Hydraulic Actuator Valve
PR - PRPV – Pressure Reducing Pilot Valve

OPERATION

SET position

Pressurized water in the valve's control chamber (DL) is trapped by the check valve (CV), the closed emergency valve (EU) and by the closed hydraulic drain actuator HAV-2 (HA). The hydraulic pressure accumulated in the Wet Pilot detection line keeps this device in its closed position, maintaining the FDV deluge valve (DL) close.

FIRE situation

When the Wet Pilot detection line's automatic fire sprinklers are subjected to flame heat and shatter-open, the HAV-2 depressurizes and drains the deluge valve's control chamber through the pressure reducing pilot (PR). The FDV deluge valve opens, admitting water to the spray sprinklers line at a steady preset pressure.

RESET position

Initiating a system reset requires the replacement of all shattered-open fire sprinklers in the Wet Pilot detection line. The PSA (PS) push button is then pressed, to enable air supply intake to pressurize the Wet Pilot detection Line. Consequently, the HAV-2 actuator closes, commanding the FDV deluge valve to close.

FDV - PH0

Typical installation

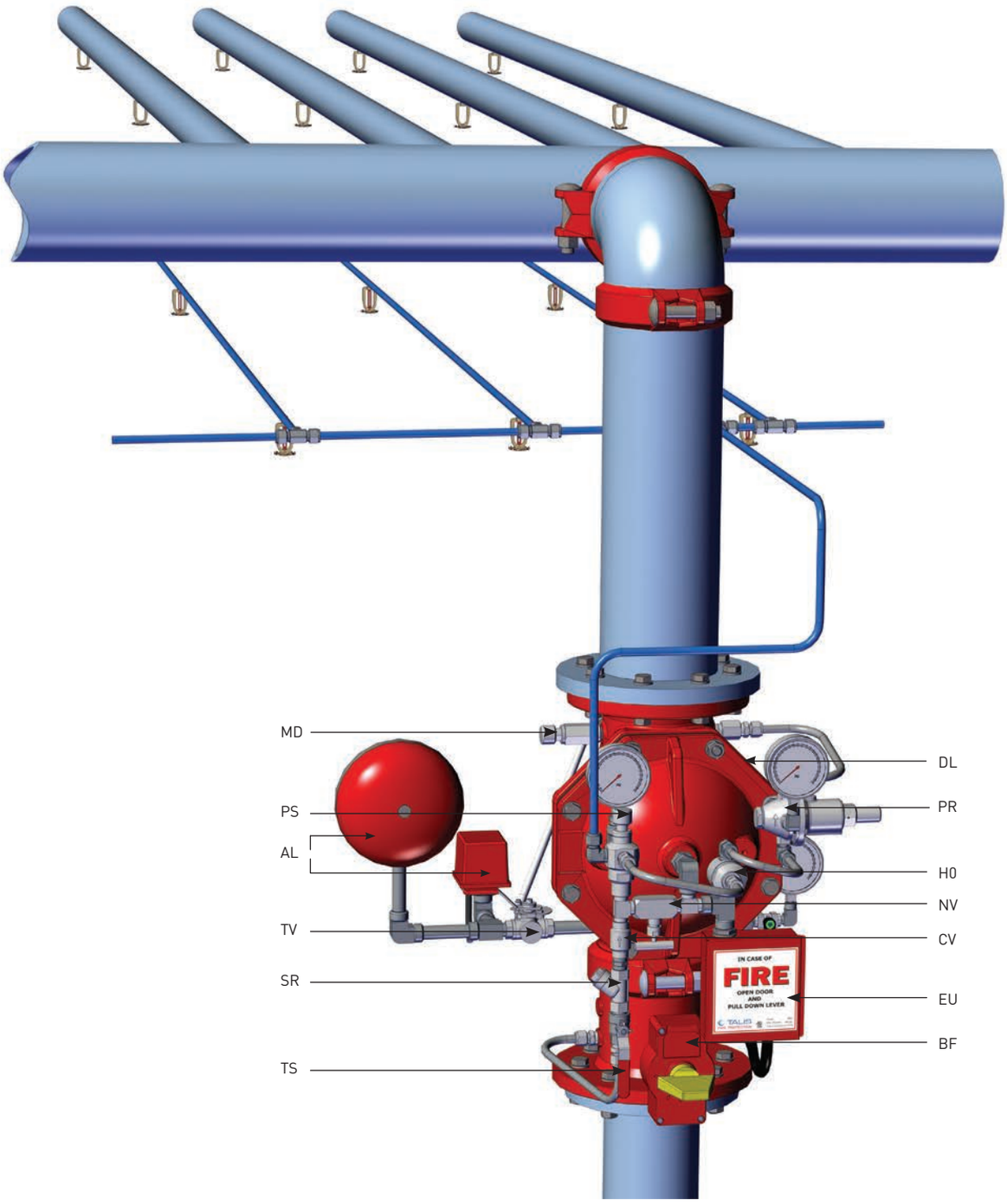

BF - Butterfly valve
DL - FDV Deluge valve
UD - Upstream drain valve
DD - Downstream drain valve
AL - Acoustic & Electric alarms
TS - Trim supply valve

SR - "Y" strainer
CV - Check valve
NV - Needle valve
PS - PSA – Pressure Supply Arrestor
MD - MADV – Manual Automatic Drain Valve

TV - Alarm test valve
EU - Emergency Manual Unit
HA - HAV-2 Hydraulic Actuator Valve
PR - PRPV – Pressure Reducing Pilot Valve

Dimensions Table

Vertical

Size	1 1/2" 2"		3"		4"		6"		8"	
	mm	Inch	mm	Inch	mm	Inch	mm	Inch	mm	Inch
A	235	9.2	267	10.5	281	11	306	12	338	13.3
B	267	10.5	300	11.8	283	11.1	311	12.2	361	14.2
C	82	3.2	64	2.5	-	-	-	-	-	-
D	224	8.8	325	12.8	400	15.8	462	18.2	580	22.8
E	234	9.2	183	7.2	148	5.8	118	4.6	58	2.3
F	210	8.3	172	6.8	208	8.2	232	9.1	257	10.1
G	259	10.2	219	8.6	346	13.6	411	16.2	436	17.2
Kg/lb	20.4	45	32.5	71.6	49.9	110.1	68.6	151.2	108	238.1

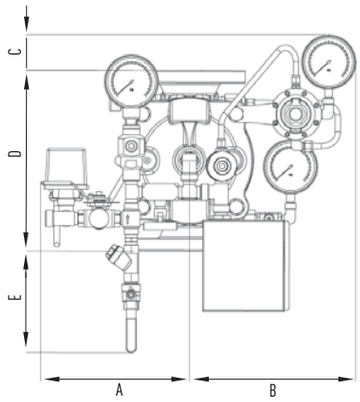

Horizontal

Size	1 1/2" 2"		3"		4"		6"		8"	
	mm	Inch	mm	Inch	mm	Inch	mm	Inch	mm	Inch
A	235	9.2	267	10.5	281	11.1	306	12.0	336	13.2
B	189	7.4	271	10.7	316	12.4	343	13.5	402	15.8
C	4.2	0.2	32	1.3	-	-	-	-	-	-
D	224	8.8	325	12.8	400	15.7	462	18.2	580	22.8
E	234	9.2	183	7.2	148	5.8	118	4.6	58	2.3
F	150	5.9	172	6.8	208	8.2	232	9.1	257	10.1
G	431	17	460	18.1	451	17.8	515	20.3	544	21.4
Kg/lb	20.8	45.9	33.1	72.9	50.2	110.7	68.9	151.9	108.2	238.5

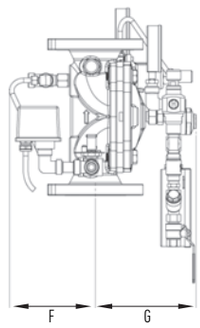

Factory Standard

MAIN VALVE:

BODY & COVER

- Ductile iron
- Cast Steel WCB
- Stainless Steel CF8
- Stainless Steel CF8M
- Nickel Aluminum Bronze

ELASTOMERS:

- NR, fabric reinforced Natural Rubber
- EPDM, fabric reinforced
- NBR, fabric reinforced Nitrile Rubber

COATING:

- Rilsan Polyamide based (Nylon 11)
- Polyester based EPC
- High built Epoxy FBE
- Vitreous Enamel (internal only)

TRIM

PIPING & TUBING:

- Stainless Steel 316
- Copper/Brass
- Cupro-Nickel
- Monel®

FITTINGS:

- Stainless Steel 316
- Brass
- Super Duplex
- Cupro-Nickel
- Monel®

ACCESSORIES:

- Brass Nickel plated
- Nickel Aluminium bronze
- Stainless steel CF8M
- Monel®
- Cupro-Nickel

PLEASE SPECIFY

- Working Media
- Ambiental conditions
- Min/Max operating flow
- Min/Max operating pressure
- Downstream set pressure
- Energize to Open/Close valve
- Wet Pilot's hieght.
- System installation orientation
- Additional accessories needed

For more detailed technical information, please refer to chapter Engineering Data.

TALIS FP RANGE

Modulating Deluge systems

Hydraulic Actuated with Remote Reset, Pressure Reducing Deluge Valve

FDV - PH1

The FDV is a Fire Protection control valve for Deluge fire sprinkler systems, designed for installations in hazardous environments.

The FDV-PH1 is a pressure control Deluge system, actuated hydraulically and resets remotely.

When the Wet Pilot detection line's automatic fire sprinklers are subjected to flame heat and shatter-open, it enables the FDV control chamber to drain and de-pressurize, opening of the deluge valve and admitting water into the spray sprinkler system. Once open, the valve reduces the inlet high pressure to a predetermined fixed outlet pressure. The Deluge system incorporates an emergency valve, bypassing the fire detection system for manual operation.

Designed for vertical or horizontal installation, a globe pattern, line pressure operated FDV-PH1 valve features a direct elastomeric diaphragm seal. It has no balancing spring or internal metallic wet components in the valve body. The hydrodynamic pattern design, ensures high flow rates with minimum head loss.

MARKETS

Marine | P.O.G. | Airports

TECHNICAL DATA

FLUID:
Water, Brackish water, Sea water, Foam

SIZE RANGE:
40mm to 250mm (1½" to 10")

AVAILABLE CONNECTIONS ENDS:
Flange*Flange, Groove*Groove, Flange*Groove, Groove*Flange, Thread*Thread

PRESSURE NOMINAL:
250 psi (17.2 bar)

REGULATION RATIO: 5:1

SENSITIVITY: 1.45 psi (0.1 Bar)

APPROVALS

ADVANTAGES

- Only three parts: body, diaphragm & cover plate, no wet metal spring inside the control chamber
- Full bore unobstructed
- Simple reset of the valve to standby position without draining or opening the valve itself, neither closing OS&Y or other valves in the system
- Open fail safe valve, maintained in stand-by closed position
- Low maintenance cost: the valve is serviced in-line and only one replaceable part which is long life elastomeric diaphragm
- Conforms with inspection, Testing and Maintenance Standard of water-based Fire Protection Systems, NFPA 25

CHARACTERISTICS

- Hydro-dynamic pattern design ensures high flowrates with minimum head loss
- The valve trips open automatically upon a gradual release of water pressure from its control chamber. The valve is actuated by a Wet Pilot Line's hydraulic pressure release due to its exposure to flame heat
- Soft closing upon pressurization of the valve's control chamber, by line pressure or other independent water source, prevents surges
- A pressure reducing pilot enables a full control over the downstream pressure and ensures a steady set in a wide pressure range

The FDV-PH1 resets to stand-by close position by pressurizing the Dry Pilot Line.

Schematic drawing

Set position

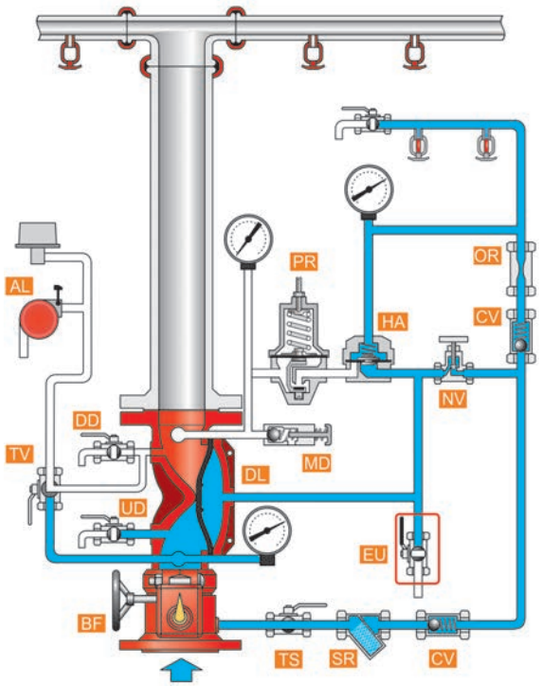

Fire position

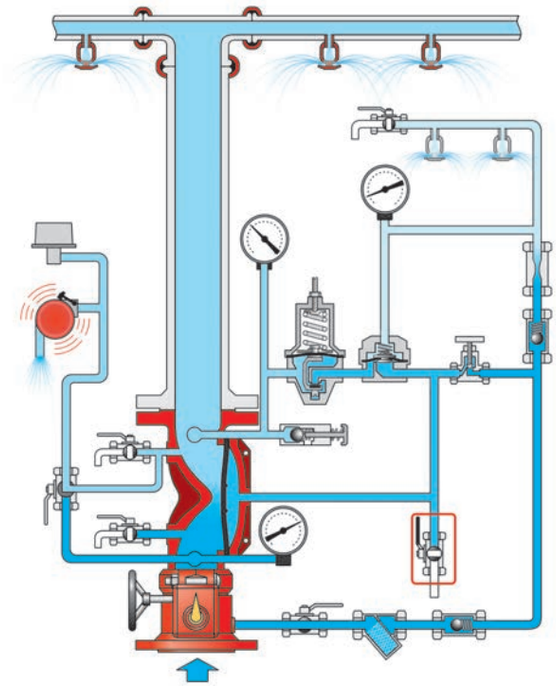

BF - Butterfly valve
DL - FDV Deluge valve
UD - Upstream drain valve
DD - Downstream drain valve
AL - Acoustic & Electric alarms
TS - Trim supply valve
SR - "Y" strainer
CV - Check valve
OR - Orifice
NV - Needle valve
MD - MADV – Manual Automatic Drain Valve
TV - Alarm test valve
EU - Emergency Manual Unit
HA - HAV-2 Hydraulic Actuator Valve
PR - PRPV – Pressure Reducing Pilot Valve

OPERATION

SET position

Pressurized water in the valve's control chamber (DL) is trapped by the check valve (CV), the closed emergency valve (EU) and by the closed hydraulic drain actuator HAV-2 (HA). The hydraulic pressure accumulated in the Wet Pilot line keeps this device in closed position, maintaining the FDV deluge valve (DL) close.

FIRE situation

When the Wet Pilot detection line's automatic fire sprinklers are subjected to flame heat and shatter-open, the HAV-2 depressurizes, drains the deluge valve's control chamber through the pressure reducing pilot (PR). The FDV deluge valve opens, admitting water to the spray sprinklers line at a steady preset pressure.

RESET position

Initiating a system reset requires the replacement of all Shattered-open fire sprinklers in the Wet Pilot detection line. By that, the HAV-2 actuator closes and upstream pressurizes the FDV Deluge valve's control chamber through the needle valve (NV). Consequently, The Deluge valve closes and water spray stops.

FDV - PH1

Typical installation

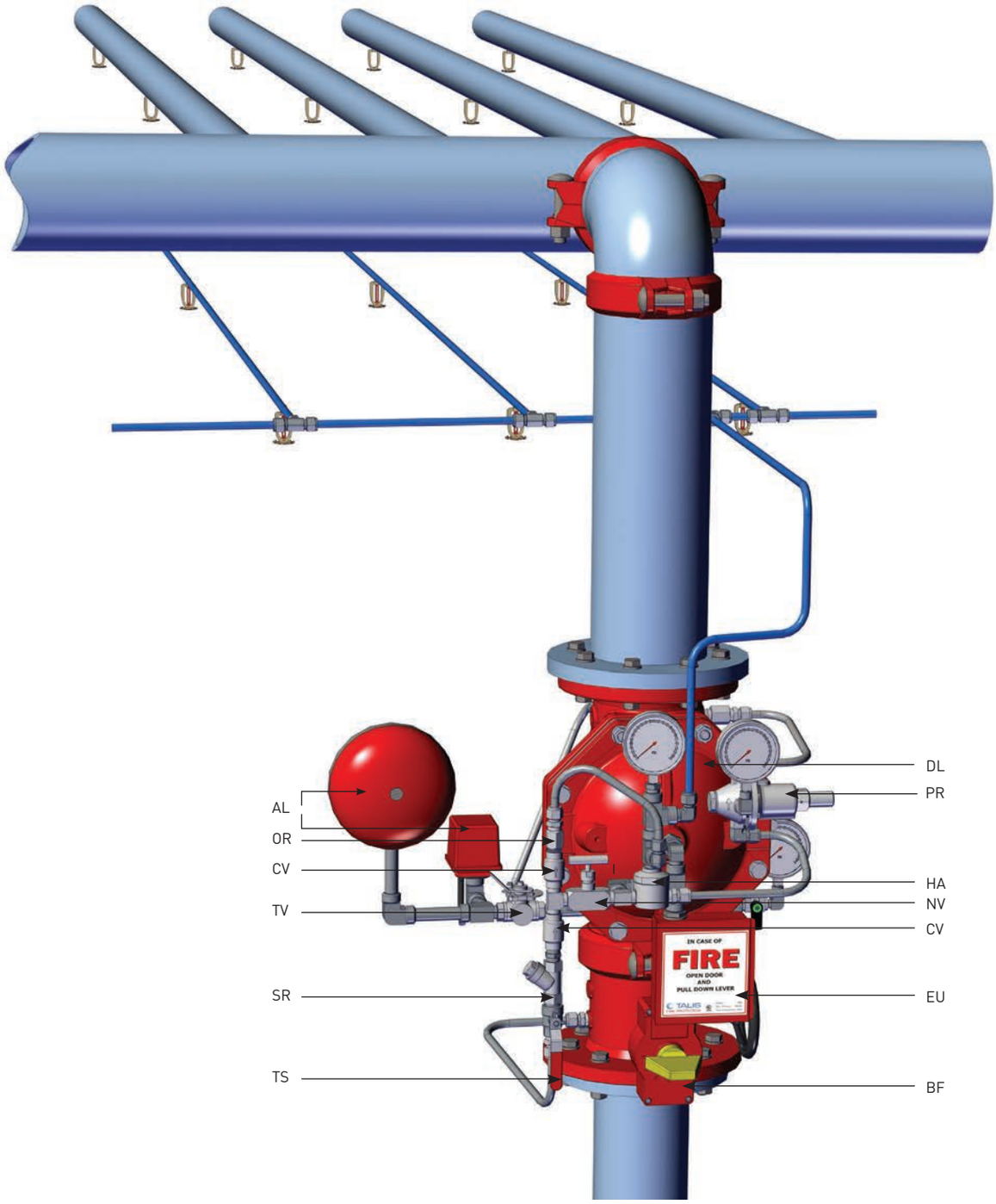

BF - Butterfly valve
DL - FDV Deluge valve
UD - Upstream drain valve
DD - Downstream drain valve
AL - Acoustic & Electric alarms
TS - Trim supply valve

SR - "Y" strainer
CV - Check valve
OR - Orifice
NV - Needle valve
MD - MADV – Manual Automatic Drain Valve

TV - Alarm test valve
EU - Emergency Manual Unit
HA - HAV-2 Hydraulic Actuator Valve
PR - PRPV – Pressure Reducing Pilot Valve

Dimensions Table

Vertical

Size	1 1/2" 2"		3"		4"		6"		8"	
	mm	Inch	mm	Inch	mm	Inch	mm	Inch	mm	Inch
A	200	7.9	245	9.6	297	11.7	340	13.4	314	12.3
B	316	12.4	231	9	335	13.2	266	10.5	290	11.4
C	116	4.6	103	4	73	2.9	58	2.3	44	1.7
D	224	8.8	325	12.8	400	15.8	462	18.2	580	22.8
E	233	9.2	182	7.2	92	3.6	62	2.4	-	-
F	160	6.3	161	6.3	214	214	231	9.1	255	10
G	308	12	437	17.2	289	8.4	398	15.7	385	15.1
Kg/lb	20.5	45.2	32.4	71.4	49.4	108.9	68.4	150.8	107.6	237

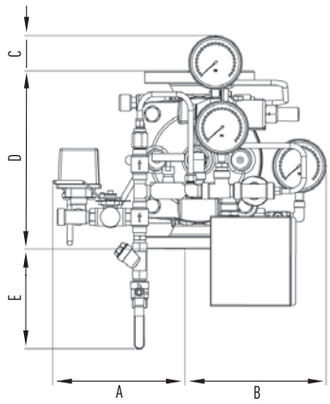

Horizontal

Size	1 1/2" 2"		3"		4"		6"		8"	
	mm	Inch	mm	Inch	mm	Inch	mm	Inch	mm	Inch
A	315	12.4	244	9.6	275	10.8	315	12.4	232	9.1
B	285	11.2	199	7.8	334	13.1	256	10	263	11.6
C	107	4.2	102	4	74	2.9	22.5	0.9	44	1.7
D	224	8.8	325	12.8	400	15.8	462	18.2	580	22.8
E	234	9.2	182	7.2	82	3.2	52	2	-	-
F	162	6.4	170	6.7	192	7.5	233	9.2	240	9.5
G	406	15.9	437	17.2	433	17	488	19.2	530	20.9
Kg/lb	20.2	44.5	32.7	72	49.6	109.3	68.5	151	107.3	236.6

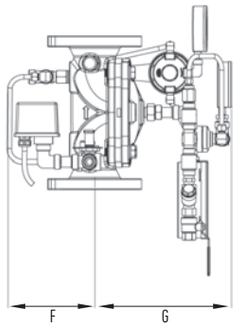

Factory Standard

MAIN VALVE:

BODY & COVER

- Ductile iron
- Cast Steel WCB
- Stainless Steel CF8
- Stainless Steel CF8M
- Nickel Aluminum Bronze

ELASTOMERS:

- NR, fabric reinforced Natural Rubber
- EPDM, fabric reinforced
- NBR, fabric reinforced Nitrile Rubber

COATING:

- Rilsan Polyamide based (Nylon 11)
- Polyester based EPC
- High built Epoxy FBE
- Vitreous Enamel (internal only)

TRIM

PIPING & TUBING:

- Stainless Steel 316
- Copper/Brass
- Cupro-Nickel
- Monel®

FITTINGS:

- Stainless Steel 316
- Brass
- Super Duplex
- Cupro-Nickel
- Monel®

ACCESSORIES:

- Brass Nickel plated
- Nickel Aluminium bronze
- Stainless steel CF8M
- Monel®
- Cupro-Nickel

PLEASE SPECIFY

- Working Media
- Ambiental conditions
- Min/Max operating flow
- Min/Max operating pressure
- Downstream set pressure
- Wet Pilot's hieght.
- System installation orientation
- Additional accessories needed

For more detailed technical information, please refer to chapter Engineering Data.

TALIS FP RANGE

Modulating Deluge systems

Hydraulic actuated, Pressure reducing Local Reset Deluge Valve & Anti-Columning

FDV - PA0

The FDV is a Fire Protection control valve for Deluge fire sprinkler systems, designed for installations in hazardous environments. The FDV-PA0 is a pressure control deluge system, actuated hydraulically and resets locally. When a hydraulic detection system, a Wet Pilot Detection Line, is exposed to predetermined temperature level, automatic fire sprinklers shatter open causing a pressure drop that activate a pilot valve commanding the FDV-PA0 Deluge valve to open. Once open, the valve reduces the inlet high pressure to a predetermined fixed outlet pressure. The Anti Columning feature ensures system operation, regardless of the Detection line's height and distance from the Control valve. The Deluge system incorporates an emergency valve, bypassing the fire detection systems for manual operation. Designed for vertical or horizontal installation, a globe pattern, line pressure operated FDV-PA0 valve features a direct elastomeric diaphragm seal. It has no balancing spring or internal metallic wet components in the valve body. The hydrodynamic pattern design, ensures high flow rates with minimum head loss.

MARKETS

Commercial Marine Residential

TECHNICAL DATA

FLUID:
Water, Brackish water, Sea water, Foam

SIZE RANGE:
40mm to 250mm (1½" to 10")

AVAILABLE CONNECTIONS ENDS:
Flange*Flange, Groove*Groove, Flange*Groove, Groove*Flange, Thread*Thread

PRESSURE NOMINAL:
250 psi (17.2 bar)

REGULATION RATIO: 5:1

SENSITIVITY: 1.45 psi (0.1 Bar)

APPROVALS

ADVANTAGES

- Only three parts: body, diaphragm & cover plate, no wet metal spring inside the control chamber
- Full bore unobstructed
- Simple manual reset of the valve to standby position without draining or opening the valve itself, neither closing OS&Y or other valves in the system
- Open fail safe valve, maintained in stand-by closed position
- Low maintenance cost: the valve is serviced in-line and only one replaceable part which is long life elastomeric diaphragm
- Conforms with inspection, Testing and Maintenance Standard of water-based Fire Protection Systems, NFPA 25

CHARACTERISTICS

- Hydro-dynamic pattern design ensures high flowrates with minimum head loss
- The valve trips open automatically upon a gradual release of water pressure from its control chamber. The valve is actuated by a Wet Pilot Line's hydraulic pressure release due to its exposure to flame heat. The Anti-Columning properties guarantees an immediate system trip, regardless of the Wet pilot height
- Soft closing upon pressurization of the valve's control chamber, by line pressure or other independent water source prevents surges
- A pressure reducing pilot enables a full control over the downstream pressure and ensures a steady set in a wide pressure range

The FDV-PA0 resets to stand-by close position by pressurizing the Dry Pilot Line and manually operating the PSA device.

Schematic drawing

Set position

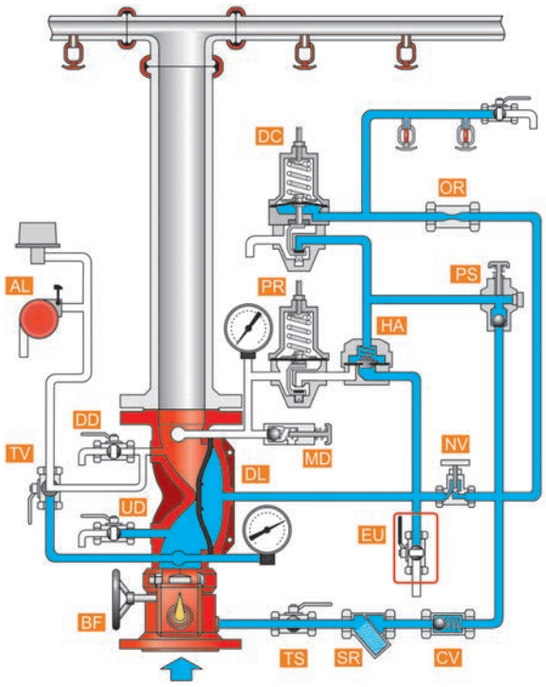

Fire position

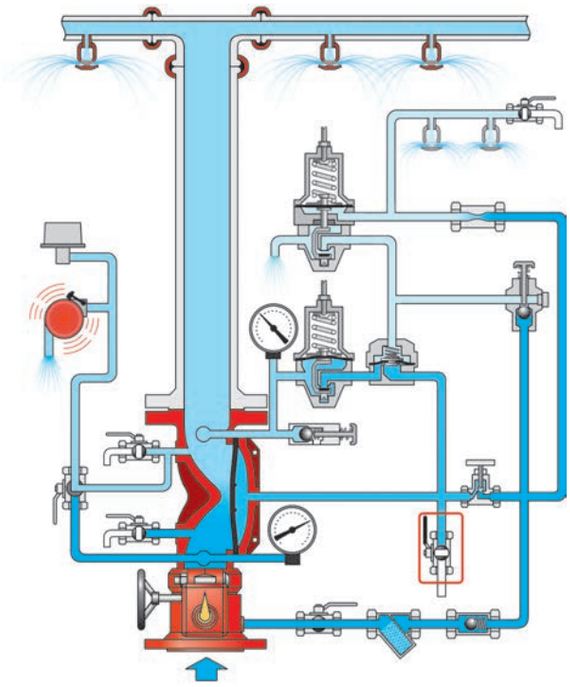

BF - Butterfly valve
DL - FDV Deluge valve
UD - Upstream drain valve
DD - Downstream drain valve
AL - Acoustic & Electric alarms
TS - Trim supply valve
SR - "Y" strainer
CV - Check valve
OR - Orifice
NV - Needle valve
PS - **PSA** - Pressure Supply Arrestor
MD - MADV – Manual Automatic Drain Valve
TV - Alarm test valve
EU - Emergency Manual Unit
HA - **HAV** - Hydraulic Actuator Valve
PR - **PRPV** - Pressure Reducing Pilot Valve
DC - **DCPV** - Drain Control Pilot Valve

OPERATION

SET position

Pressurized water in the valve's control chamber (DL) is trapped by a check valve (CV), by the closed emergency valve (EU) and by the closed HAV-2 (HA) actuator. The hydraulic pressure accumulated in the wet pilot line, keeps the DCPV drain pilot (DC) in its close position, maintaining the HAV-2 closed and by that, FDV deluge valve (DL) also closes.

FIRE situation

When some of the wet pilot detection line's automatic sprinklers are subjected to the predetermined temperature levels and shutter-open, the pilot Line pressure drops and the DCPV opens its drain port regardless of the residual column pressure. Opening its drain port, the DCPV opens the HAV-2 actuator to drain the FDV's control chamber through the pressure reducing pilot (PR). The FDV deluge valve opens and admits water to the spray sprinklers line at a steady preset pressure

RESET position

Initiating a system reset requires the replacement of all shattered-open fire sprinklers in the detection pilot line. The Wet Pilot Line is then pressurized to reset the DCPV to its close position. The PSA (PS) push button should be pressed to enable upstream pressure passage to the HAV-2's control chamber and to close the FDV valve.

FDV - PA0

Typical installation

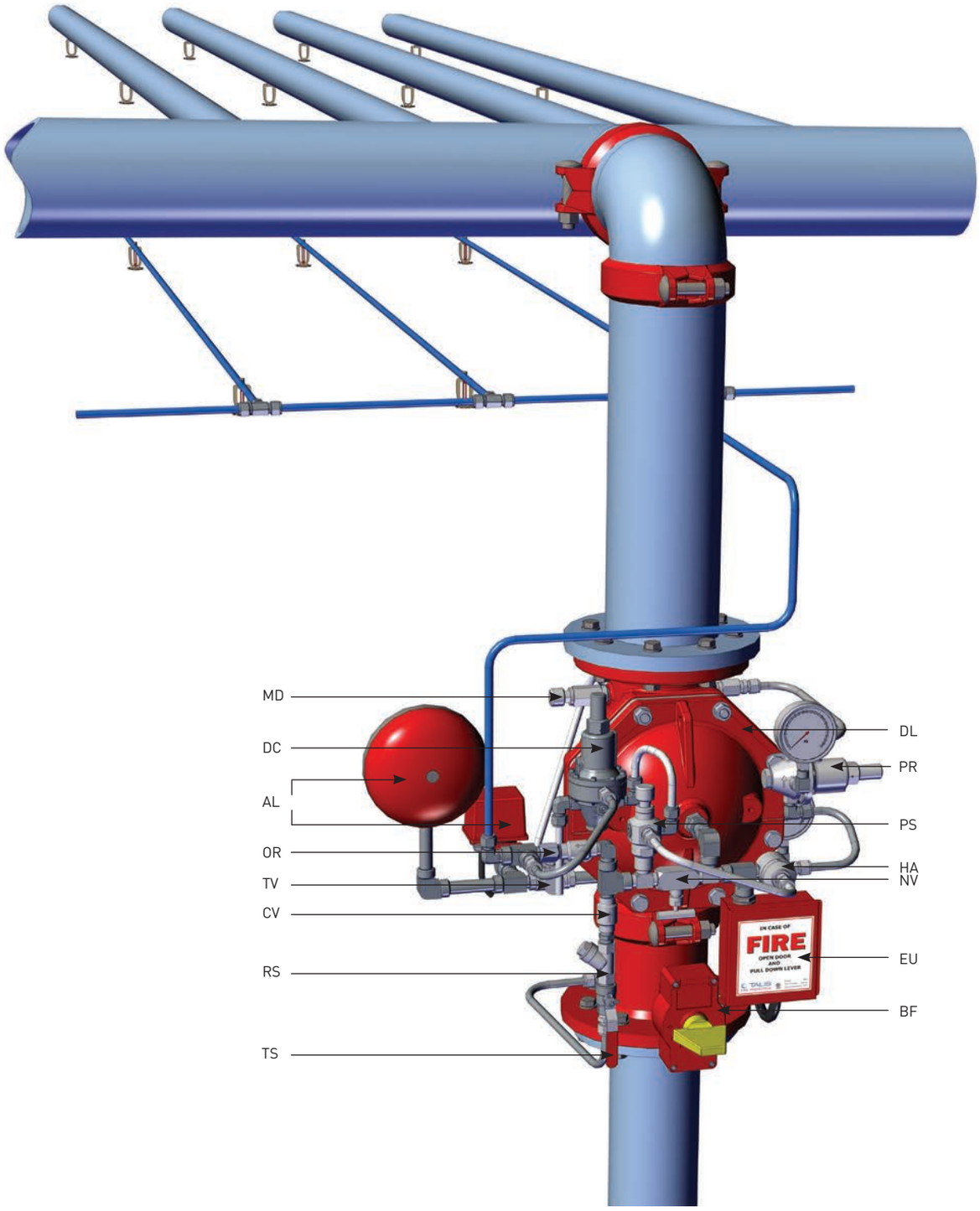

BF - Butterfly valve
DL - FDV Deluge valve
UD - Upstream drain valve
DD - Downstream drain valve
AL - Acoustic & Electric alarms
TS - Trim supply valve

SR - "Y" strainer
CV - Check valve
OR - Orifice
NV - Needle valve
PS - **PSA** - Pressure Supply Arrestor
MD - MADV – Manual Automatic Drain Valve

TV - Alarm test valve
EU - Emergency Manual Unit
HA - **HAV** - Hydraulic Actuator Valve
PR - **PRPV** - Pressure Reducing Pilot Valve
DC - **DCPV** - Drain Control Pilot Valve

Dimensions Table

Vertical

Size	1 1/2" 2"		3"		4"		6"		8"	
	mm	Inch	mm	Inch	mm	Inch	mm	Inch	mm	Inch
A	294	11.6	275	10.8	294	11.6	294	11.6	331	13
B	267	10.5	238	9.4	284	11.2	311	12.2	364	14.3
C	90	3.5	74	2.9	4.5	0.2	-	-	-	-
D	224	8.8	325	12.8	401	15.8	462	18.2	580	22.8
E	235	9.2	217	8.5	149	5.9	118	4.6	59	2.3
F	154	6	170	6.7	205	8	229	9	255	10
G	350	13.8	381	15	439	17.3	455	17.9	483	19
Kg/lb	24.7	54.5	37	81.6	54.6	120.4	73	160.9	112.5	248

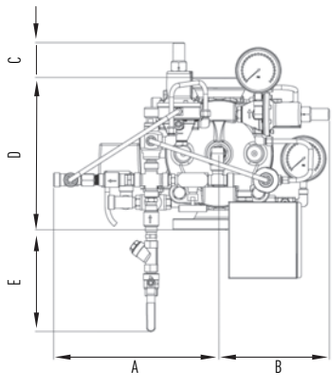

Horizontal

Size	1 1/2" 2"		3"		4"		6"		8"	
	mm	Inch	mm	Inch	mm	Inch	mm	Inch	mm	Inch
A	348	13.7	359	14.1	373	14.7	297	11.7	430	16.9
B	236	9.3	199	7.8	284	11.2	311	12.2	364	14.3
C	90	3.5	75	2.9	4.5	0.2	-	-	-	-
D	224	8.8	325	12.8	401	15.8	462	18.2	580	22.8
E	235	9.2	184	7.2	149	5.9	118	4.6	59	2,3
F	157	6.2	196	7.7	241	9.5	229	9	291	11.4
G	393	15.5	415	16.4	446	17.6	460	18.1	490	19.3
Kg/lb	24.8	54.7	37	81.6	54.5	120.2	73	160.9	112.6	248.2

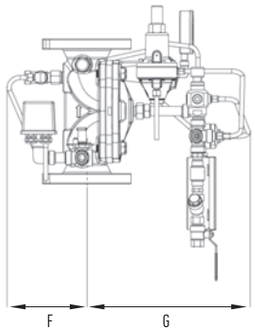

Factory Standard

MAIN VALVE:

BODY & COVER

- Ductile iron
- Cast Steel WCB
- Stainless Steel CF8
- Stainless Steel CF8M
- Nickel Aluminum Bronze

ELASTOMERS:

- NR, fabric reinforced Natural Rubber
- EPDM, fabric reinforced
- NBR, fabric reinforced Nitrile Rubber

COATING:

- Rilsan Polyamide based (Nylon 11)
- Polyester based EPC
- High built Epoxy FBE
- Vitreous Enamel (internal only)

TRIM

PIPING & TUBING:

- Stainless Steel 316
- Copper/Brass
- Cupro-Nickel
- Monel®

FITTINGS:

- Stainless Steel 316
- Brass
- Super Duplex
- Cupro-Nickel
- Monel®

ACCESSORIES:

- Brass Nickel plated
- Nickel Aluminium bronze
- Stainless steel CF8M
- Monel®
- Cupro-Nickel

PLEASE SPECIFY

- Working Media
- Ambiental conditions
- Min/Max operating flow
- Min/Max operating pressure
- Downstream set pressure
- Wet Pilot's hieght.
- System installation orientation
- Additional accessories needed

For more detailed technical information, please refer to chapter Engineering Data.

TALIS FP RANGE

Modulating Deluge systems

Hydraulic actuated, Pressure reducing Remote Reset Deluge Valve & Anti-Columning.

FDV - PA1

The FDV is a Fire Protection control valve for Deluge fire sprinkler systems, designed for installations in hazardous environments.

The FDV-PA1 is a pressure control Deluge system, actuated hydraulically and resets remotely.

When a hydraulic detection system, a Wet Pilot Detection Line, is exposed to a predetermined temperature level, automatic fire sprinklers shatter open causing a pressure drop that activates a pilot valve, commanding the FDV-PA1 Deluge valve to open. Once open, the valve reduces the inlet high pressure to a predetermined fixed outlet pressure. The Anti Columning property enables a system operation, indifferent to the detection line's height and distance from the control valve. The Deluge system incorporates an emergency valve, bypassing the fire detection systems for manual operation.

Designed for vertical or horizontal installation, a globe pattern, line pressure operated FDV-PA1 valve features a direct elastomeric diaphragm seal. It has no balancing spring or internal metallic wet components in the valve body. The hydrodynamic pattern design, ensures high flow rates with minimum head loss.

MARKETS

Marine | P.O.G. | Airports

TECHNICAL DATA

FLUID:
Water, Brackish water, Sea water, Foam

SIZE RANGE:
40mm to 250mm (1½" to 10")

AVAILABLE CONNECTIONS ENDS:
Flange*Flange, Groove*Groove, Flange*Groove, Groove*Flange, Thread*Thread

PRESSURE NOMINAL:
250 psi (17.2 bar)

REGULATION RATIO: 5:1

SENSITIVITY: 1.45 psi (0.1 Bar)

APPROVALS

ADVANTAGES

- Only three parts: body, diaphragm & cover plate, no wet metal spring inside the control chamber
- Full bore unobstructed
- Simple manual reset of the valve to standby position without draining or opening the valve itself, neither closing OS&Y or other valves in the system
- Open fail safe valve, maintained in stand-by closed position
- Low maintenance cost: the valve is serviced in-line and only one replaceable part which is long life elastomeric diaphragm
- Conforms with inspection, Testing and Maintenance Standard of water-based Fire Protection Systems, NFPA 25

CHARACTERISTICS

- Hydro-dynamic pattern design ensures high flowrates with minimum head loss
- The valve trips open automatically upon a gradual release of water pressure from its control chamber. The valve is actuated by a Wet Pilot Line's hydraulic pressure release due to its exposure to flame heat. The Anti-Columning properties guarantees an immediate system trip, regardless of the Wet Pilot height
- Soft closing upon pressurization of the valve's control chamber, by line pressure or other independent water source, prevents surges
- A pressure reducing pilot enables a full control over the downstream pressure and ensures a steady set in a wide pressure range

The FDV-PA1 resets to stand-by close position by pressurizing the Dry Pilot Line and manually operating the PSA device.

Schematic drawing

Set position

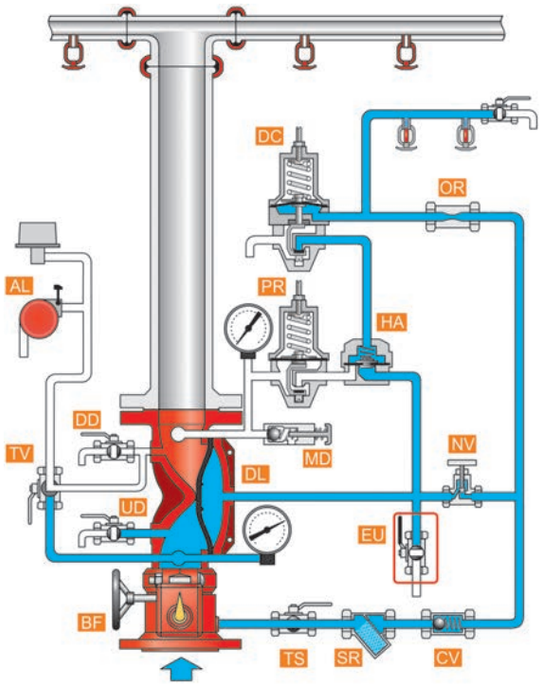

Fire position

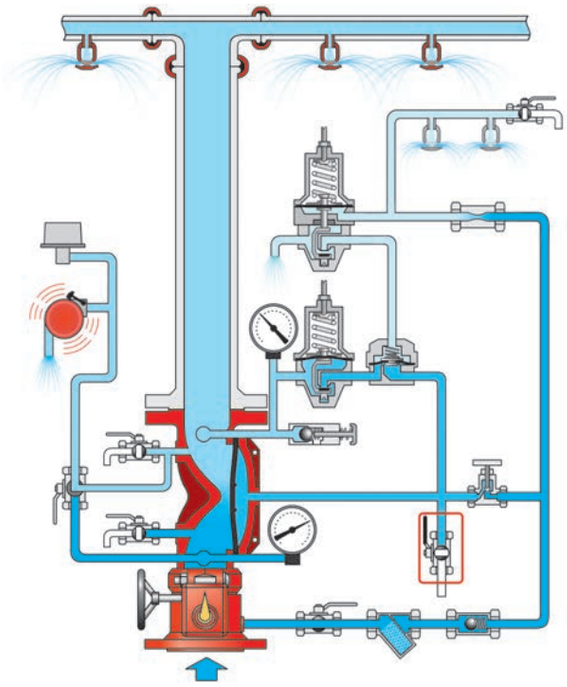

BF - Butterfly valve
DL - FDV Deluge valve
UD - Upstream drain valve
DD - Downstream drain valve
AL - Acoustic & Electric alarms
TS - Trim supply valve

SR - "Y" strainer
CV - Check valve
OR - Orifice
NV - Needle valve
MD - MADV – Manual Automatic Drain Valve

TV - Alarm test valve
EU - Emergency Manual Unit
PR - **PRPV** - Pressure Reducing Pilot Valve
DC - **DCPV** - Drain Control Pilot Valve

OPERATION

SET position

Pressurized water in the valve's control chamber (DL) is trapped by the check valve (CV), the closed emergency valve (EU) and by the closed DCPV drain pilot actuator (DC). The hydraulic pressure accumulated in the Wet pilot line keeps the DCPV in its close position, maintaining the FDV deluge valve (DL) close.

FIRE situation

When some of the Wet pilot detection line's automatic sprinklers are subjected to the predetermined temperature levels and shutter-open, the pilot line pressure drops and the DCPV opens its drain port regardless of the residual column pressure. Opening its drain port, the DCPV releases the FDV's control chamber pressure through the reducing pilot (PR). The FDV deluge valve opens, admitting water to the spray sprinklers line at a steady, preset pressure.

RESET position

Initiating a system reset requires the replacement of all shattered-open fire sprinklers in the Wet Pilot detection Line. The Wet Pilot Line is then pressurized to reset the DCPV to its close state. Consequently, The Deluge valve closes and water spray stops.

FDV - PA1

Typical installation

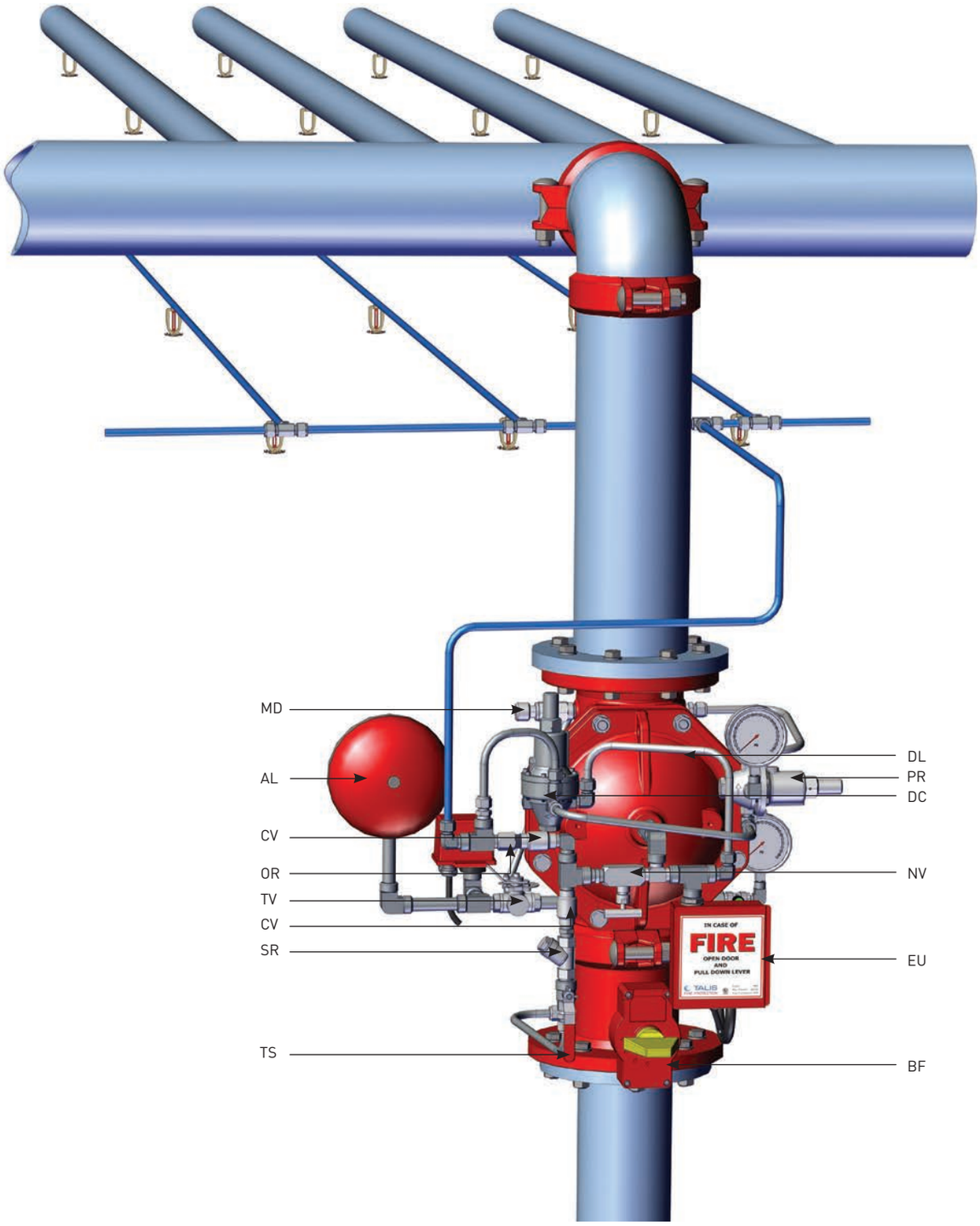

BF - Butterfly valve
DL - FDV Deluge valve
UD - Upstream drain valve
DD - Downstream drain valve
AL - Acoustic & Electric alarms
TS - Trim supply valve

SR - "Y" strainer
CV - Check valve
OR - Orifice
NV - Needle valve
MD - MADV – Manual Automatic Drain Valve

TV - Alarm test valve
EU - Emergency Manual Unit
PR - **PRPV** - Pressure Reducing Pilot Valve
DC - **DCPV** - Drain Control Pilot Valve

Dimensions Table

Vertical

Size	1 1/2" 2"		3"		4"		6"		8"	
	mm	Inch	mm	Inch	mm	Inch	mm	Inch	mm	Inch
A	168	6.6	239	9.4	276	10.8	286	11.2	291	11.4
B	265	10	237	9.3	284	11.2	311	12.2	337	13.2
C	91	3.6	21	0.8	-	-	-	-	-	-
D	224	8.8	325	12.8	400	15.8	462	18.2	580	11
E	234	9.2	103	4	224	8.8	121	4.7	120	4.7
F	168	6.6	179	7	221	8.7	231	9	234	9.2
G	255	10	243	9.5	298	11.7	363	14.3	395	15.5
Kg/lb	22.2	48.9	34.8	76.7	52.1	114.8	70.7	155.8	110	242.5

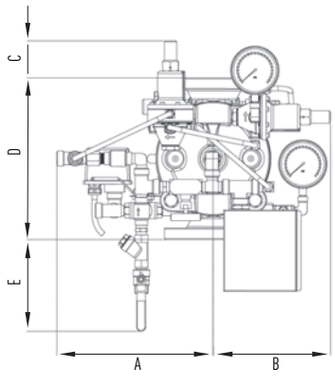

Horizontal

Size	1 1/2" 2"		3"		4"		6"		8"	
	mm	Inch	mm	Inch	mm	Inch	mm	Inch	mm	Inch
A	328	12.9	361.5	14.3	355	14	378	14.9	405	15.9
B	234	9.2	234	9.2	280	11	308	12.1	304	12
C	90.5	3.6	74.5	2.9	4	0.16	-	-	-	-
D	224	8.8	325	12.8	400	15.8	462	18.2	580	22.8
E	232	9.1	184	7.2	194	7.6	118	4.6	58	2,3
F	191	7.5	206	8.1	244	9.6	271	10.7	291.5	11.5
G	254	10	317	12.5	373	14.7	368	14.5	466	18.3
Kg/lb	22.2	48.9	34.7	76.5	51.8	116.4	70.5	155.4	110	242.5

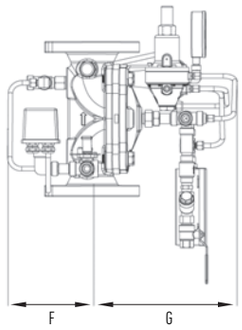

Factory Standard

MAIN VALVE:

BODY & COVER

- Ductile iron
- Cast Steel WCB
- Stainless Steel CF8
- Stainless Steel CF8M
- Nickel Aluminum Bronze

ELASTOMERS:

- NR, fabric reinforced Natural Rubber
- EPDM, fabric reinforced
- NBR, fabric reinforced Nitrile Rubber

COATING:

- Rilsan Polyamide based (Nylon 11)
- Polyester based EPC
- High built Epoxy FBE
- Vitreous Enamel (internal only)

TRIM

PIPING & TUBING:

- Stainless Steel 316
- Copper/Brass
- Cupro-Nickel
- Monel®

FITTINGS:

- Stainless Steel 316
- Brass
- Super Duplex
- Cupro-Nickel
- Monel®

ACCESSORIES:

- Brass Nickel plated
- Nickel Aluminium bronze
- Stainless steel CF8M
- Monel®
- Cupro-Nickel

PLEASE SPECIFY

- Working Media
- Ambiental conditions
- Min/Max operating flow
- Min/Max operating pressure
- Downstream set pressure
- Energize to Open/Close valve
- Wet Pilot's Height
- System installation orientation
- Additional accessories needed

For more detailed technical information, please refer to chapter Engineering Data.

Basic Deluge systems

Electric Actuated with Remote Reset Deluge Valve

FDV - AE1

The FDV-AE1 is a Fire Protection control valve for Deluge fire sprinkler systems, designed for installations in hazardous environments.

The FDV-AE1 Deluge system actuates electrically and resets remotely.

The sensors connected to the fire detection Panel, activate an electric signal transmitted to a solenoid valve and commands the valve to open.

The Deluge system incorporates an emergency valve, bypassing the fire detection panel for manual operation. Designed for vertical or horizontal installation, a globe pattern, line pressure operated FDV-AE1 valve features a direct elastomeric diaphragm seal. It has no balancing spring or internal metallic wet components in the valve body. The hydrodynamic pattern design, ensures high flow rates with minimum head loss.

MARKETS

P.O.G. | Marine | Air ports | Tunnels | Storage

TECHNICAL DATA

FLUID:
Water, Brackish water, Sea water, Foam

SIZE RANGE:
40mm to 250mm (1½" to 10")

AVAILABLE CONNECTIONS ENDS:
Flange*Flange, Groove*Groove, Flange*Groove, Groove*Flange, Thread*Thread

PRESSURE NOMINAL:
250 psi (17.2 bar)

APPROVALS

ADVANTAGES

- Only three parts: body, diaphragm & cover plate, no wet metal spring inside the control chamber
- Full bore unobstructed
- Simple reset of the valve to standby position without draining or opening the valve itself, neither closing OS&Y or other valves in the system Open
- Open fail safe valve, maintained in stand-by closed position
- Low maintenance cost: the valve is serviced in-line and only one replaceable part which is long life elastomeric diaphragm
- Conforms with inspection, testing and maintenance standard of water-based fire protection systems, NFPA 25

CHARACTERISTICS

- Hydro-dynamic pattern design ensures high flowrates with minimum head loss
- The valve trips open automatically upon a gradual release of water pressure from its control chamber when electric signal is conveyed to the valve's solenoid
- Soft closing upon pressurization of the valve's control chamber, by line pressure or other independent water source to prevents surges

The FDV-AE1 resets to stand-by close position by de-energizing the alarm system solenoid's coil through the main control panel.

Schematic drawing

Set position

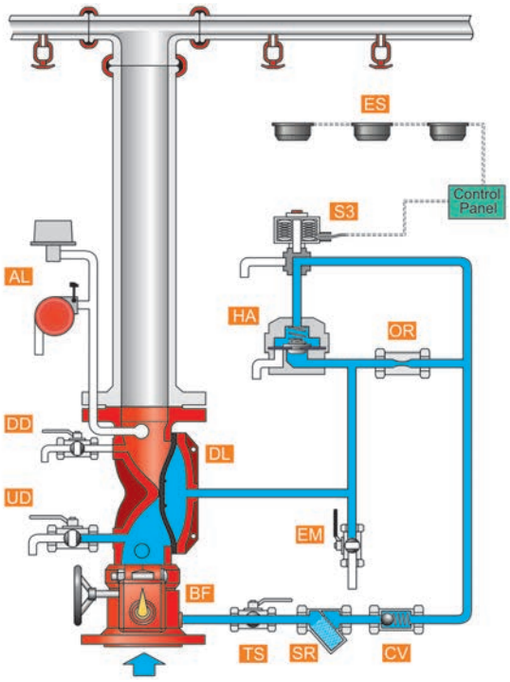

Fire position

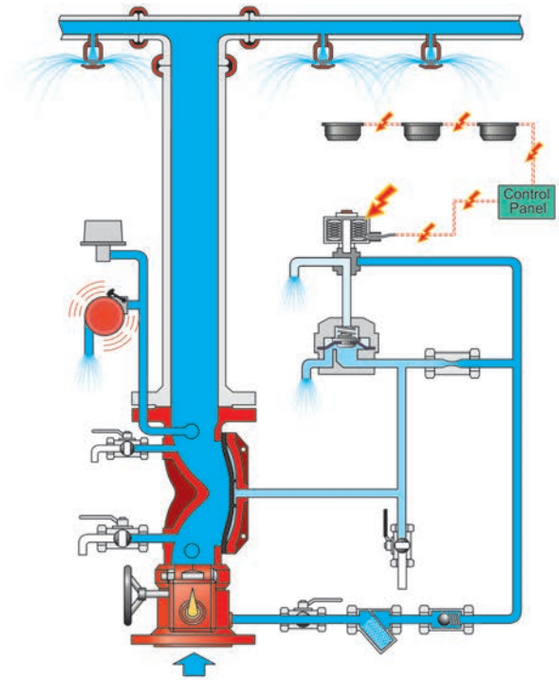

BF - Butterfly valve
DL - FDV Deluge valve
AL - Acoustic & Electric alarms
TS - Trim supply valve

SR - "Y" strainer
CV - Check valve
OR - Orifice
TV - Alarm test valve

EM - Emergency valve
HA - HAV-2 – Hydraulic Actuator Valve (2 way)
S3 - Solenoid 3 way

OPERATION

SET position

Pressurized water in the valve's control chamber is trapped by the check-valve (CV), by the closed HAV-2 actuator (HA) and by the closed emergency valve (EM), maintaining the deluge valve in closed position.
The 3 way solenoid pressurizes the HAV-2, holding it in its close position.

FIRE situation

When one or more of the electric heat or flame sensor detects fire, it signals the control panel that in turns, energizes the 3 way solenoid (S3). The solenoid commands the HAV-2 to open and the actuator drains the FDV's control chamber to the atmosphere. The FDV deluge valve opens and water flow into the spray sprinklers pipe line. It manually opening the Emergency valve (EM), drains the FDV control chamber and open the valve immediately.

RESET position

When the control panel de-energizes the solenoid, the upstream supply pressurizes the HAV-2's control chamber, commanding it to close. The upstream pressure flows through the orifice (OR) to the FDV valve's control chamber and the valve closes, returning to Set position.

FDV - AE1

Typical installation

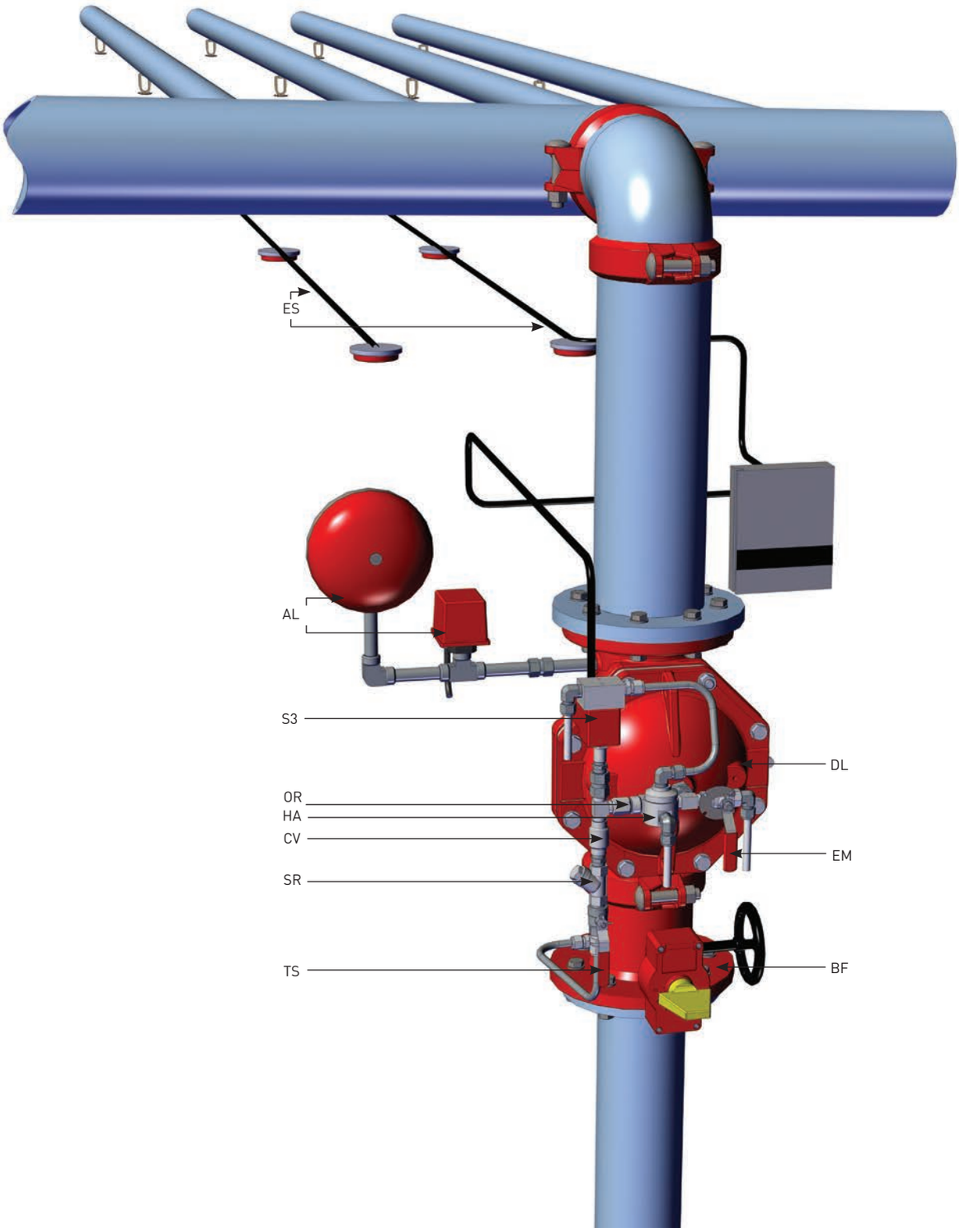

BF - Butterfly valve
DL - FDV Deluge valve
AL - Acoustic & Electric alarms
TS - Trim supply valve

SR - "Y" strainer
CV - Check valve
OR - Orifice
TV - Alarm test valve

EM - Emergency valve
HA - HAV-2 – Hydraulic Actuator Valve (2 way)
S3 - Solenoid 3 way

Dimensions Table

Vertical

Size	1 1/2" 2"		3"		4"		6"		8"	
	mm	Inch	mm	Inch	mm	Inch	mm	Inch	mm	Inch
A	209	8.3	208	8.2	208	8.2	209	8.2	251	9.9
B	165	6.5	165	6.5	165	6.5	194	7.6	-	-
C	96	3.8	47	1.8	7	0.3	-	-	-	-
D	224	8.8	325	12.8	400	15.7	462	18.2	580	22.8
E	178	7	126	5	91	3.6	61	2.4	-	-
F	74	2.9	92	3.6	113	4.5	143	5.7	174	6.8
G	242	9.5	272	10.7	295	11.6	367	14.5	397	15.7
Kg/lb	14	30.8	26.4	50.2	43.2	95.2	61.8	136.2	101.2	223.1

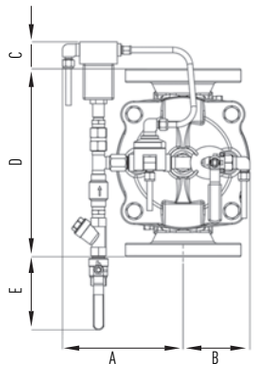

Horizontal

Size	1 1/2" 2"		3"		4"		6"		8"	
	mm	Inch	mm	Inch	mm	Inch	mm	Inch	mm	Inch
A	221	8.7	223	8.8	231	9	219	8.6	326	12.8
B	167	6.6	172	6.8	204	8	223	8.8	277	10.9
C	96	3.8	47	1.8	7	0.3	-	-	-	-
D	224	8.8	325	12.8	400	15.7	462	18.2	580	22.8
E	178	7	126	5	91	3.6	61	2.4	-	-
F	74	2.9	92	3.6	113	4.5	143	5.6	164	6.4
G	242	9.5	271	10.7	305	12	368	14.5	398	15.7
Kg/lb	14	30.8	26.4	58.2	43	94.8	61.6	135.8	101.3	223.3

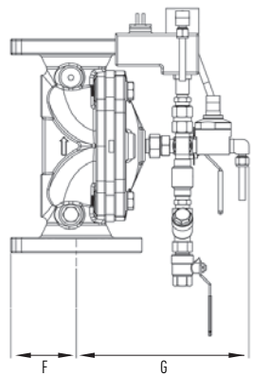

Factory Standard

MAIN VALVE:

BODY & COVER

- Ductile iron
- Cast Steel WCB
- Stainless Steel CF8
- Stainless Steel CF8M
- Nickel Aluminum Bronze

ELASTOMERS:

- NR, fabric reinforced Natural Rubber
- EPDM, fabric reinforced
- NBR, fabric reinforced Nitrile Rubber

COATING:

- Rilsan Polyamide based (Nylon 11)
- Polyester based EPC
- High built Epoxy FBE
- Vitreous Enamel (internal only)

TRIM

PIPING & TUBING:

- Stainless Steel 316
- Copper/Brass
- Cupro-Nickel
- Monel®

FITTINGS:

- Stainless Steel 316
- Brass
- Super Duplex
- Cupro-Nickel
- Monel®

ACCESSORIES:

- Brass, Nickel plated
- Nickel Aluminium bronze
- Stainless steel CF8M
- Monel®
- Cupro-Nickel

PLEASE SPECIFY

- Working Media
- Ambiental conditions
- Min/Max operating flow
- Min/Max operating pressure
- Energize to Open/Close valve
- Solenoid Voltage
- Solenoid Protection
- System installation orientation
- Additional accessories needed

For more detailed technical information, please refer to chapter Engineering Data.

TALIS FP RANGE

Basic valve systems

Pneumatic Actuated with Remote Reset Deluge Valve

FDV - AP1

The FDV is a Fire Protection control valve for Deluge fire sprinkler systems, designed for installations in hazardous environments.

The FDV-AP1 Deluge system actuates pneumatically and resets remotely. When a pneumatic pressure accumulated in the Dry Pilot detection line is exposed to a predetermined temperature level, the automatic fire sprinklers shatter-open, venting the air pressure from the detection line. The drop in pressure opens the pneumatic actuator that in turn commands the Deluge valve to open.

The Deluge system incorporates an emergency valve, bypassing the fire detection systems for manual operation. Designed for vertical or horizontal installation, a globe pattern, line pressure operated FDV-AP1 valve features a direct elastomeric diaphragm Seal. It has no balancing spring or internal metallic wet components in the valve body. The hydrodynamic pattern design, ensures high flow rates with minimum head loss.

MARKETS

Commercial, Industry, Marine, P.O.G., Residential, Air ports

TECHNICAL DATA

FLUID:
Water, Brackish water, Sea water, Foam

PNEUMATICS:
Air, Nitrogen

SIZE RANGE:
40mm to 250mm (1½" to 10")

AVAILABLE CONNECTIONS ENDS:
Flange*Flange, Groove*Groove, Flange*Groove, Groove*Flange, Thread*Thread

PRESSURE NOMINAL:
250 psi (17.2 bar)

APPROVALS

ADVANTAGES

- Only three parts: body, diaphragm & cover plate, no wet metal spring inside the control chamber
- Full bore unobstructed
- Simple reset of the valve to standby position without draining or opening the valve itself, neither closing OS&Y or other valves in the system
- Open fail safe valve, maintained in stand-by closed position
- Low maintenance cost: the valve is serviced in-line with only one replaceable part which is long life elastomeric diaphragm
- Conforms with inspection, testing and maintenance standard of water-based fire protection systems, NFPA 25

CHARACTERISTICS

- Hydro-dynamic pattern design ensures high flowrates with minimum head loss
- The valve trips open automatically upon a gradual release of water pressure from its control chamber. The valve is actuated by the Dry Pilot Line's pneumatic pressure release due to its automatic sprinklers exposure to flame heat
- Soft closing upon pressurization of the valve's control chamber, by line pressure or other independent water source to prevents surges

The FDV-AP1 resets to stand-by close position by re-pressurizing the Dry Pilot Line.

Schematic drawing

Set position

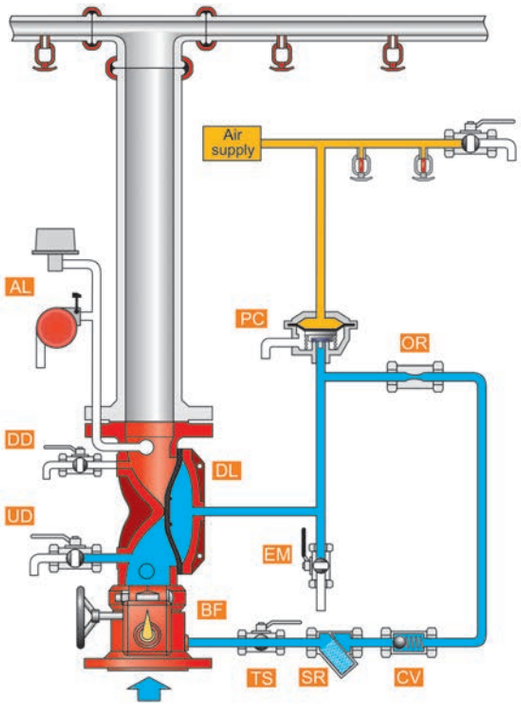

Fire position

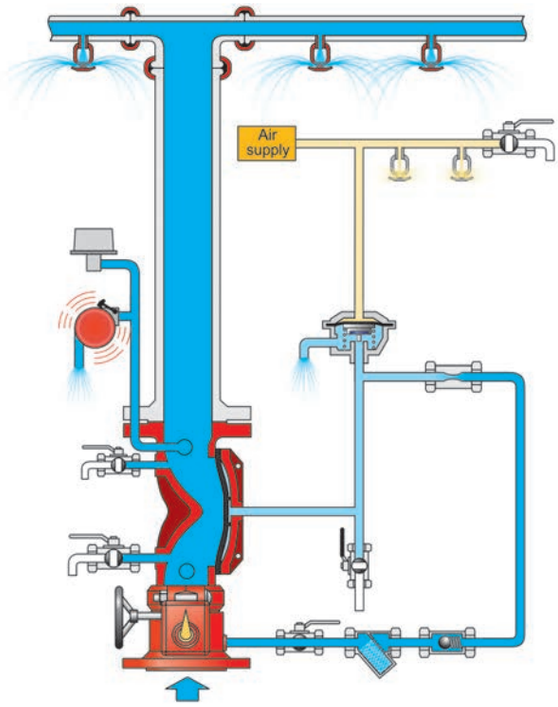

BF - Butterfly valve
DL - FDV Deluge valve
AL - Acoustic & Electric alarms
TS - Trim supply valve
SR - "Y" strainer
CV - Check valve
OR - Orifice
EM - Emergency valve

OPERATION

SET position

Pressurized water in the valve's control chamber is trapped by the check-valve (CV), by the closed HAV-2 actuator (HA) and by the closed emergency valve (EM), maintaining the deluge valve in closed position.
The 3 way solenoid pressurizes the HAV-2, holding it in its close position.

FIRE situation

When one or more of the electric heat or flame sensor detects fire, it signals the control panel that in turn, energizes the 3 way solenoid (S3). The solenoid commands the HAV-2 to open and the actuator drains the FDV's control chamber to the atmosphere. The FDV deluge valve opens and water flow into the spray sprinklers pipe line. Manually opening the Emergency valve (EM), drains the FDV control chamber and opens the valve immediately.

RESET position

When the control panel de-energizes the solenoid, upstream supply pressurizes the HAV-2's control chamber, commanding it to close. The upstream pressure flows the through the orifice (OR) to the FDV valve's control chamber and the valve closes, returning to Set Position.

FDV - AP1

Typical installation

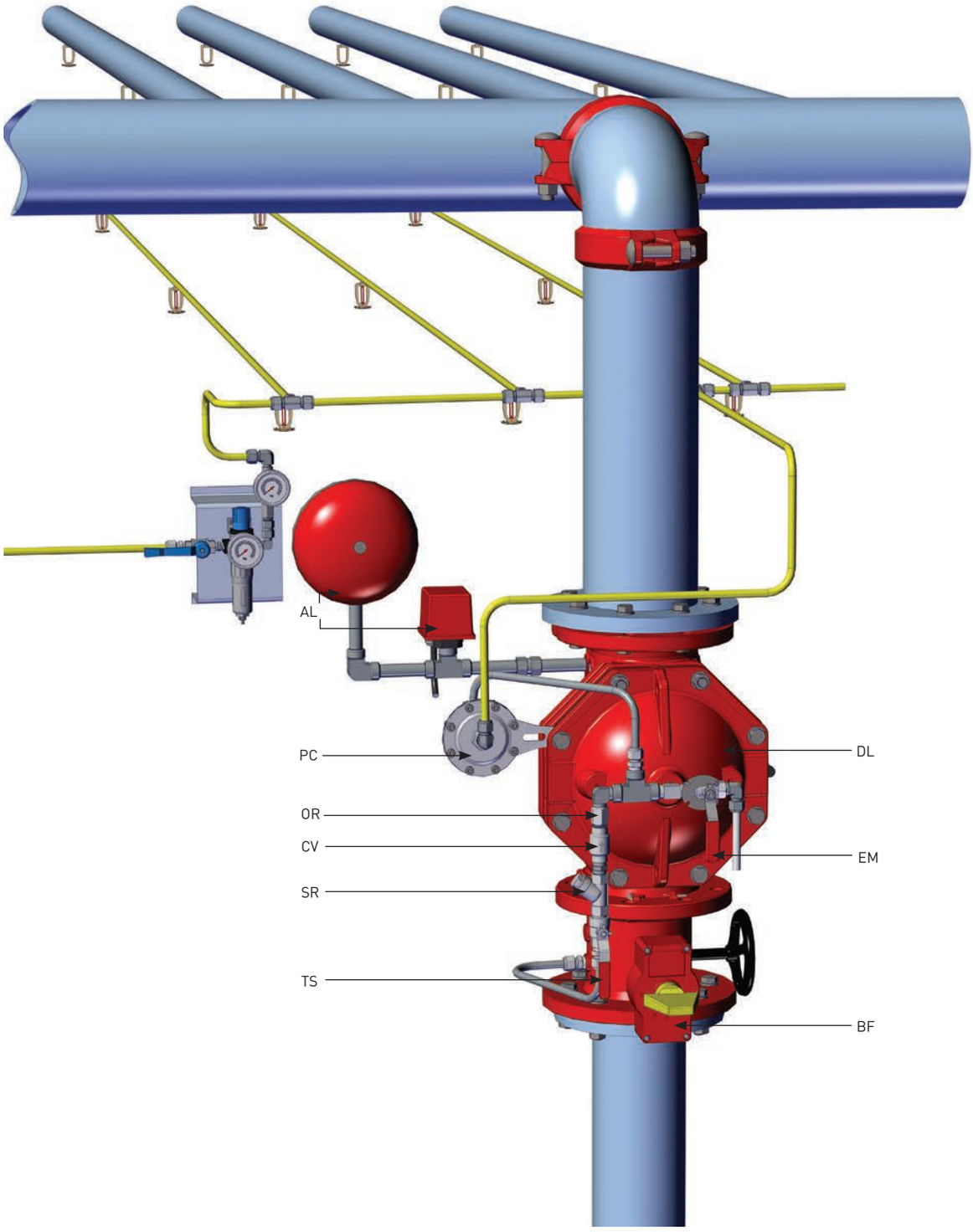

BF - Butterfly valve
DL - FDV Deluge valve
AL - Acoustic & Electric alarms
TS - Trim supply valve
SR - "Y" strainer
CV - Check valve
OR - Orifice
EM - Emergency valve

Dimensions Table

Vertical

Size	1 1/2" 2"		3"		4"		6"		8"	
	mm	Inch	mm	Inch	mm	Inch	mm	Inch	mm	Inch
A	208	8.2	267	10.5	312	12.3	340	13.4	403	15.9
B	165	6.5	165	6.5	165	6.5	-	-	-	-
C	-	-	-	-	-	-	-	-	-	-
D	224	8.8	325	12.8	400	15.7	462	18.2	580	22.8
E	209	8.3	158	6.2	123	4.8	94	3.7	32	1.2
F	74	2.9	92	3.6	113	4.5	143	5.6	174	6.8
G	205	8	234	9.2	265	10.4	328	12.9	361	14.2
Kg/lb	14	30.7	26.2	57.8	43.7	95.2	61.8	136.2	101.2	223.2

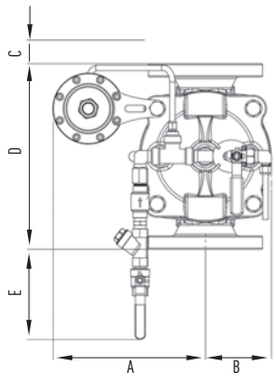

Horizontal

Size	1 1/2" 2"		3"		4"		6"		8"	
	mm	Inch	mm	Inch	mm	Inch	mm	Inch	mm	Inch
A	208	8.2	267	10.5	312	12.3	312	12.3	402	15.8
B	169	6.6	182	7.1	223	8.8	223	8.8	292	11.5
C	-	-	-	-	-	-	-	-	-	-
D	224	8.8	325	12.8	400	15.7	462	18.2	580	22.8
E	209	8.3	158	6.2	123	4.8	93	3.7	32	1.2
F	74	2.9	92	3.6	113	4.5	143	5.6	174	6.8
G	205	8	234	9.2	265	10.4	328	12.9	360	14.2
Kg/lb	14.1	31	26.2	57.8	43.2	95.4	61.9	136.4	101.4	223.6

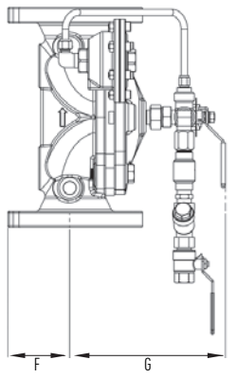

Factory Standard

MAIN VALVE:

BODY & COVER

- Ductile iron
- Cast Steel WCB
- Stainless Steel CF8
- Stainless Steel CF8M
- Nickel Aluminum Bronze

ELASTOMERS:

- NR, fabric reinforced Natural Rubber
- EPDM, fabric reinforced
- NBR, fabric reinforced Nitrile Rubber

COATING:

- Rilsan Polyamide based (Nylon 11)
- Polyester based EPC
- High built Epoxy FBE
- Vitreous Enamel (internal only)

TRIM

PIPING & TUBING:

- Stainless Steel 316
- Copper/Brass
- Cupro-Nickel
- Monel®

FITTINGS:

- Stainless Steel 316
- Brass
- Super Duplex
- Cupro-Nickel
- Monel®

ACCESSORIES:

- Brass Nickel plated
- Nickel Aluminium bronze
- Stainless steel CF8M
- Monel®
- Cupro-Nickel

PLEASE SPECIFY

- Working Media
- Ambiental conditions
- Min/Max operating flow
- Min/Max operating pressure
- Energize to Open/Close valve
- Pneumatic working pressure
- System installation orientation
- Additional accessories needed

For more detailed technical information, please refer to chapter Engineering Data.

TALIS FP RANGE

Basic Deluge systems

Electro-Pneumatic Actuated with Remote Reset Deluge Valve

FDV - AC1

The FDV is a Fire Protection control valve for deluge fire sprinkler systems, designed for installations in hazardous environments.

The FDV-AC1 Deluge system is actuated electrically or pneumatically and resets remotely. Two detection systems operating independently can command the Deluge system to open: a pneumatic pressure accumulated Dry Pilot detection line and an electric control Panel connected to heat or flame sensors. The Deluge system incorporates an emergency valve, bypassing the fire detection systems for manual operation.

Designed for vertical or horizontal installation, a globe pattern, line pressure operated FDV-AC1 valve features a direct elastomeric diaphragm seal. It has with no balancing spring or internal metallic wet components in the valve body. The hydrodynamic pattern design, ensures high flow rates with minimum head loss.

MARKETS

Industry, Marine, Storage, P.O.G., Tunnels, Airports

TECHNICAL DATA

FLUID:
Water, Brackish water, Sea water, Foam

PNEUMATICS:
Air, Nitrogen

SIZE RANGE:
40mm to 250mm (1½" to 10")

AVAILABLE CONNECTIONS ENDS:
Flange*Flange, Groove*Groove, Flange*Groove, Groove*Flange, Thread*Thread

PRESSURE NOMINAL:
250 psi (17.2 bar)

APPROVALS

ADVANTAGES

- Only three parts: body, diaphragm & cover plate, no wet metal spring inside the control chamber
- Full bore unobstructed
- Simple reset of the valve to standby position without draining or opening the valve itself, neither closing OS&Y or other valves in the system
- Open fail safe valve, maintained in stand-by closed position
- Low maintenance cost: the valve is serviced in-line with only one replaceable part which is long life elastomeric diaphragm
- Conforms with inspection, testing and maintenance standard of water-based fire protection systems, NFPA 25

CHARACTERISTICS

- Hydro-dynamic pattern design ensures high flowrates with minimum head loss
- The valve trips open automatically upon a gradual release of water pressure from its control chamber. The valve is actuated by the Dry Pilot Line's pneumatic pressure release due to its automatic sprinklers exposure to flame heat
- Soft closing upon pressurization of the valve's control chamber, by line pressure or other independent water source to prevents surges

The FDV-AC1 resets to stand-by close position by de-energizing the alarm system solenoid's coil through the main control panel or, pressurizing the Dry Pilot Line.

Schematic drawing

Set position

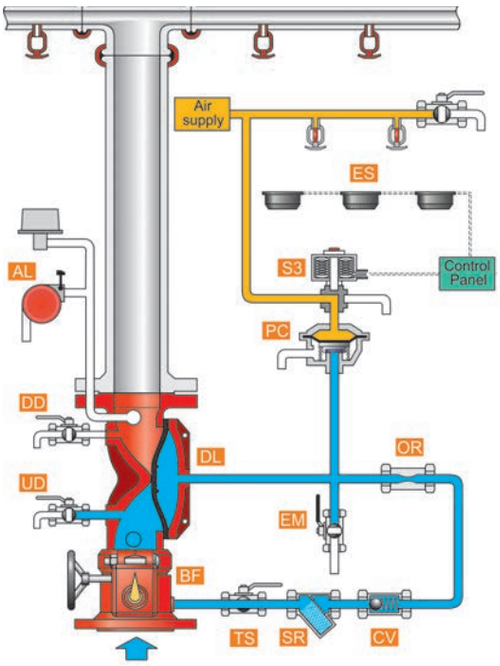

Fire position

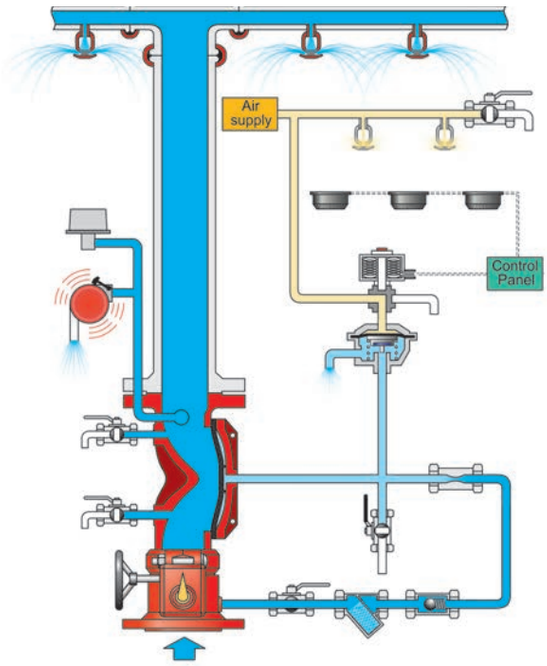

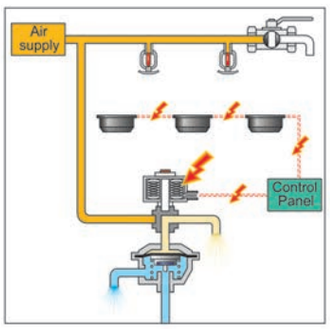

BF - Butterfly valve
DL - FDV Deluge valve
AL - Acoustic & Electric alarms
TS - Trim supply valve

SR - "Y" strainer
CV - Check valve
OR - Orifice
EM - Emergency valve
PC - PA-PTC – Pneumatic Actuator -Pressure To Close
S3 - Solenoid 3 way

OPERATION

SET position

Pressurized water in the FDV valve's control chamber is trapped by the check-valve (CV), by the closed PA-PTC actuator (PC) and by the closed emergency valve (EM), maintaining the deluge valve in closed position. The pneumatic pressure accumulated in the Dry pilot line passes through 3 way solenoid (S3), holding the PA-PTC drain actuator in closed position.

FIRE situation

When one or more dry pilot detection line automatic fire sprinklers are subjected to the predetermined temperature levels and shutter open, the pilot line and the PA-PTC (PC) control chamber depressurizes.
Alternatively, an electric heat or flame sensor detects fire, it signals the control panel that in turn, energizes the 3 way solenoid valve. The solenoid valve drains the Dry pilot line de-pressurizing the PA-PTC actuator's control chamber.

RESET position

System reset requires the replacement of all shattered to open the fire sprinklers in the detection pilot line.
Alternatively, the electrical alarm system has to be reset and the solenoid will be de-energized.
By that, the PA-PTC actuator pressurizes and closes the FDV deluge valve's drain.
Upstream pressure entering the control chamber through an orifice and forces the valve to close.

FDV - AC1

Typical installation

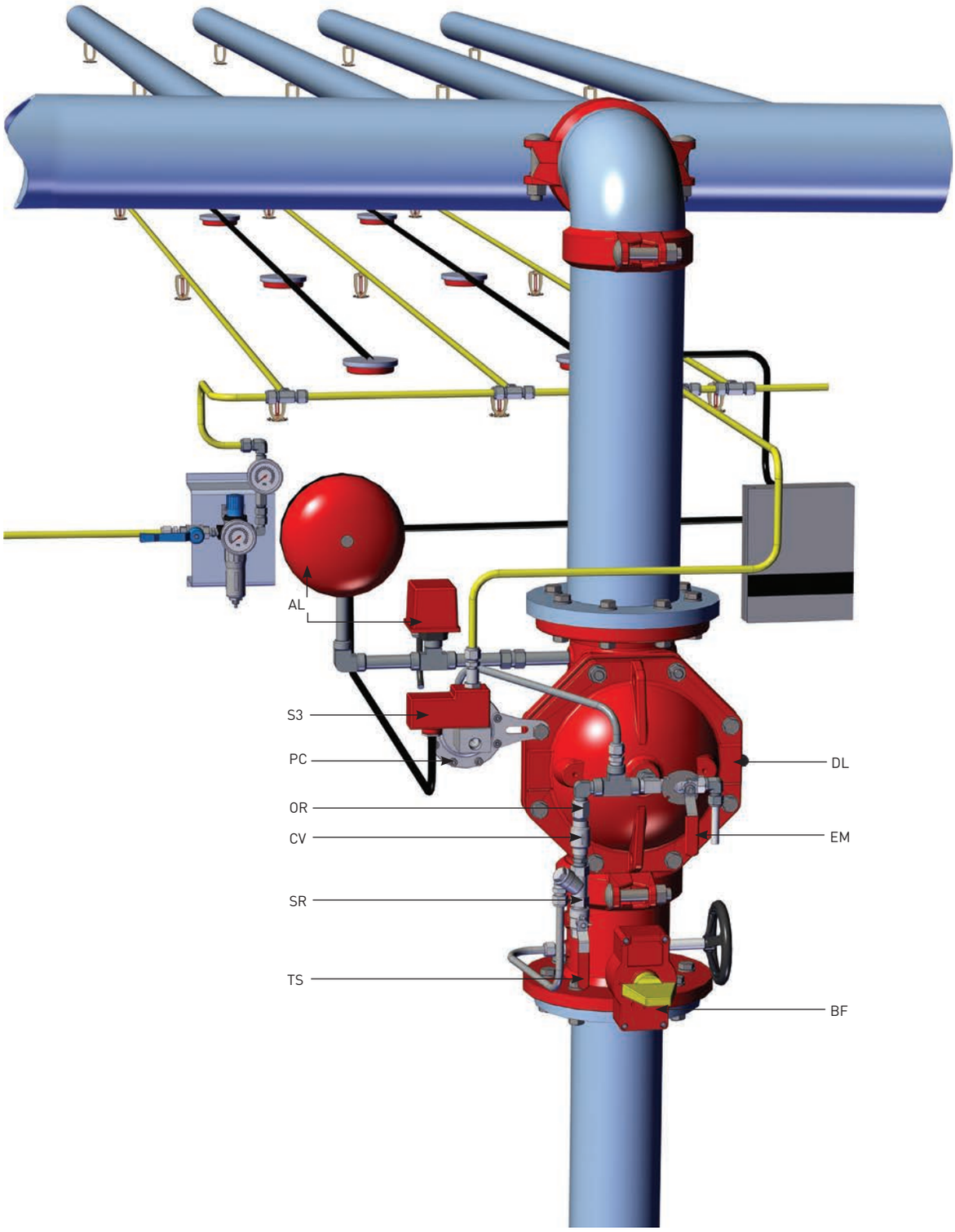

BF - Butterfly valve
DL - FDV Deluge valve
AL - Acoustic & Electric alarms
TS - Trim supply valve

SR - "Y" strainer
CV - Check valve
OR - Orifice
EM - Emergency valve

PC - PA-PTC – Pneumatic Actuator -Pressure To Close
S3 - Solenoid 3 way

Dimensions Table

Vertical

Size	1 1/2" 2"		3"		4"		6"		8"	
	mm	Inch	mm	Inch	mm	Inch	mm	Inch	mm	Inch
A	230	9	307	12	352	13.8	380	15	442	17.4
B	165	6.5	165	6.5	165	6.5	194	7.6	232	9.1
C	50	2	37	1.5	-	-	-	-	-	-
D	224	8.8	325	12.8	400	15.7	462	18.2	580	22.8
E	153	6	158	6.2	123	4.8	93	3.7	32	1.2
F	147	5.8	92	3.6	113	4.5	143	5.6	174	6.8
G	211	8.3	234	9.2	265	10.4	328	12.9	362	14.2
Kg/lb	15.5	34.2	27.6	60.8	44	97	63	139	102.5	225.9

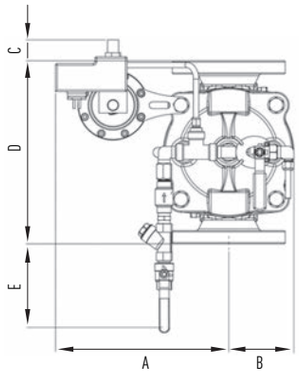

Horizontal

Size	1 1/2" 2"		3"		4"		6"		8"	
	mm	Inch	mm	Inch	mm	Inch	mm	Inch	mm	Inch
A	230	9	307	12	352	13.8	380	15	443	17.4
B	165	6.5	165	6.5	191	7.5	222	8.7	285	11.2
C	50	2	37	1.4	-	-	-	-	-	-
D	224	8.8	325	12.8	400	15.7	462	18.2	580	22.8
E	153	6	158	6.2	123	4.8	93	3.7	32	1.3
F	74	2.9	92	3.6	113	4.5	143	5.6	174	6.8
G	211	8.4	234	9.2	265	10.4	328	12.9	361	14.2
Kg/lb	15.6	34.4	27.6	60.8	44.5	98.2	63.2	139.3	102.6	226.3

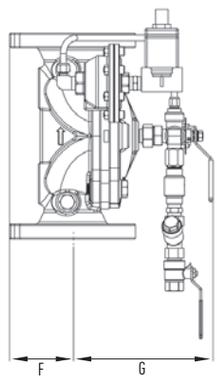

Factory Standard

MAIN VALVE:

BODY & COVER

- Ductile iron
- Cast Steel WCB
- Stainless Steel CF8
- Stainless Steel CF8M
- Nickel Aluminum Bronze

ELASTOMERS:

- NR, fabric reinforced Natural Rubber
- EPDM, fabric reinforced
- NBR, fabric reinforced Nitrile Rubber

COATING:

- Rilsan Polyamide based (Nylon 11)
- Polyester based EPC
- High built Epoxy FBE
- Vitreous Enamel (internal only)

TRIM

PIPING & TUBING:

- Stainless Steel 316
- Copper/Brass
- Cupro-Nickel
- Monel®

FITTINGS:

- Stainless Steel 316
- Brass
- Super Duplex
- Cupro-Nickel
- Monel®

ACCESSORIES:

- Brass Nickel plated
- Nickel Aluminium bronze
- Stainless steel CF8M
- Monel®
- Cupro-Nickel

PLEASE SPECIFY

- Working Media
- Ambiental conditions
- Min/Max operating flow
- Min/Max operating pressure
- Energize to Open/Close valve
- Solenoid Voltage
- Solenoid Protection
- Pneumatic working pressure
- System installation orientation
- Additional accessories needed

For more detailed technical information, please refer to chapter Engineering Data.

Basic Deluge systems

Hydraulic Actuated with Remote Reset Deluge Valve

FDV - AH1

The FDV is a Fire Protection control valve for Deluge fire sprinkler systems, designed for installations in hazardous environments.

The FDV-AH1 Deluge system actuates hydraulically and resets remotely. When a Wet Pilot detection line is exposed to flame or heat, the automatic fire sprinklers shatter-open. The water pressure in the detection line drops and commands the deluge valve to open.

The Deluge system incorporates an emergency valve, bypassing the fire detection systems for manual operation. Designed for vertical or horizontal installation, a globe pattern, line pressure operated FDV-AH1 valve features a direct elastomeric diaphragm seal. It has no balancing spring or internal metallic wet components in the valve body. The hydrodynamic pattern design, ensures high flow rates with minimum head loss.

MARKETS

Marine | P.O.G. | Airports

TECHNICAL DATA

FLUID:
Water, Brackish water, Sea water, Foam

SIZE RANGE:
40mm to 250mm (1½" to 10")

AVAILABLE CONNECTIONS ENDS:
Flange*Flange, Groove*Groove, Flange*Groove, Groove*Flange, Thread*Thread

PRESSURE NOMINAL:
250 psi (17.2 bar)

APPROVALS

ADVANTAGES

- Only three parts: body, diaphragm & cover plate, no wet metal spring inside the control chamber
- Full bore unobstructed
- Simple reset of the valve to standby position without draining or opening the valve itself, neither closing OS&Y or other valves in the system
- Open fail safe valve, maintained in stand-by closed position
- Low maintenance cost: the valve is serviced in-line with only one replaceable part which is long life elastomeric diaphragm Conforms with inspection, Testing
- Conforms with inspection, testing and maintenance standard of water-based fire protection systems, NFPA 25

CHARACTERISTICS

- Hydro-dynamic pattern design ensures high flowrates with minimum head loss
- The valve trips open automatically upon a gradual release of water pressure from its control chamber when electric signal is conveyed to the valve's solenoid
- Soft closing upon pressurization of the valve's control chamber, by line pressure or other independent water source to prevents surges

The FDV-AH1 resets to stand-by close position by re-pressurizing the Dry Pilot Line.

Schematic drawing

Set position

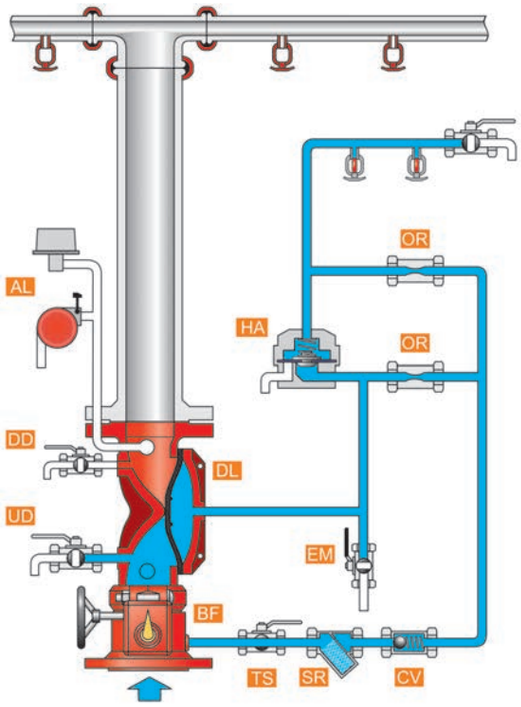

Fire position

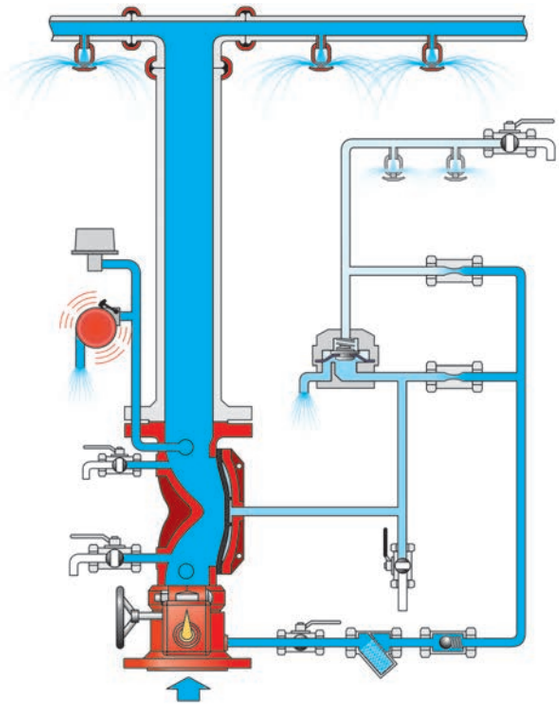

BF - Butterfly valve
DD - Downstream drain valve
AL - Acoustic & Electric alarms

TS - Trim supply valve
SR - "Y" strainer
CV - Check valve

OR - Orifice
EM - Emergency valve
HA - HAV-2 – Hydraulic Actuator Valve (2 way)

OPERATION

SET position

Pressurized water in the valve's control chamber is trapped by the check-valve (CV), by the closed HAV-2 actuator (HA) and by the closed emergency valve (EM). The hydraulic pressure in the Wet pilot detection line, keeps the HAV-2 actuator in closed position maintaining the FDV deluge close.

FIRE situation

When some of the Wet Pilot detection line automatic fire sprinklers are subjected to the predetermined temperature levels, and shutter open, the pilot detection line depressurizes, opening the HAV-2 actuator. The HAV-2 opens and drains the deluge valve's control chamber. The FDV Deluge valve opens and admits water to the spray sprinklers line.

RESET position

System reset requires the replacement of all shattered-open Fire sprinklers in the Wet Pilot detection line.
The Wet Pilot detection line is then pressurized to reset the HAV-2 actuator commanding the FDV deluge valve to close.

FDV - AH1

Typical installation

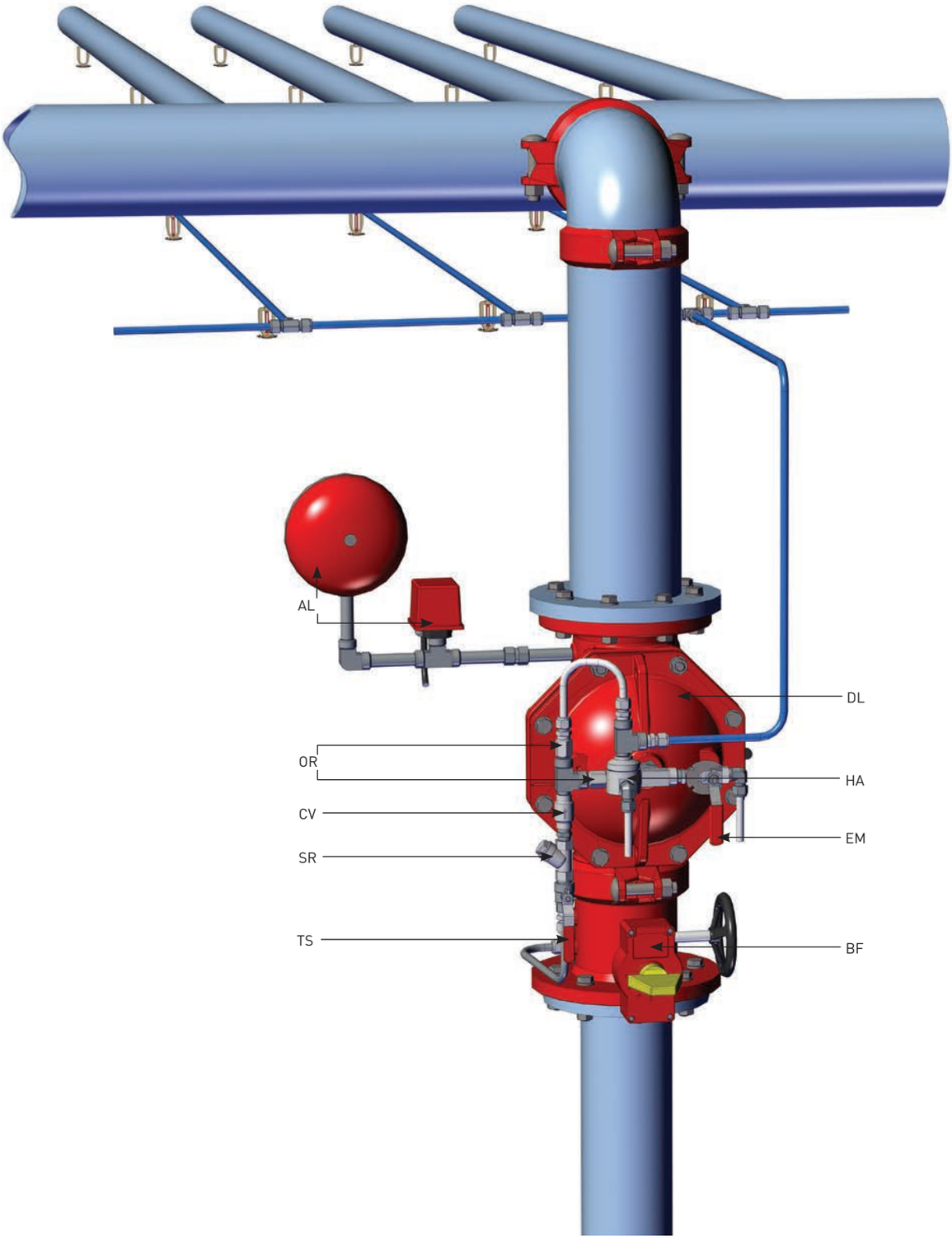

BF - Butterfly valve
DD - Downstream drain valve
AL - Acoustic & Electric alarms

TS - Trim supply valve
SR - "Y" strainer
CV - Check valve

OR - Orifice
EM - Emergency valve
HA - HAV-2 – Hydraulic Actuator Valve (2 way)

Dimensions Table

Vertical

Size	1 1/2" 2"		3"		4"		6"		8"	
	mm	Inch	mm	Inch	mm	Inch	mm	Inch	mm	Inch
A	196	7.7	196	7.7	196	7.7	195	7.7	251	9.9
B	166	6.5	166	6.5	167	6.6	194	7.6	-	-
C	118	4.6	68	2.7	56	2.2	25	1	-	-
D	224	8.8	325	12.8	400	15.7	462	18.2	580	22.8
E	122	4.8	71	2.8	35	1.4	6	0.2	-	-
F	74	2.9	92	3.6	113	4.5	143	5.6	174	6.8
G	240	9.5	270	10.6	301	11.8	365	14.4	395	15.5
Kg/lb	13	28.6	25.4	56	42.2	93	60.8	134	100.2	220.1

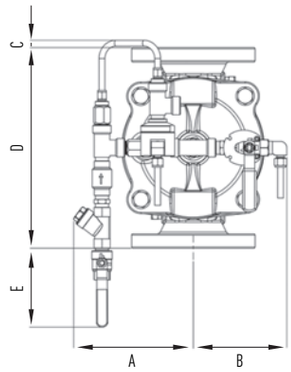

Horizontal

Size	1 1/2" 2"		3"		4"		6"		8"	
	mm	Inch	mm	Inch	mm	Inch	mm	Inch	mm	Inch
A	225	8.8	239	9.4	247	9.7	234	9.2	285	11.2
B	166	6.5	169	6.6	220	8.7	236	9.3	280	11
C	118	4.6	69	2.7	56	2.2	25	1	-	-
D	224	8.8	325	12.8	400	15.7	462	18.2	580	22.8
E	122	4.8	71	2.8	35	1.4	6	0.2	-	-
F	74	2.9	92	3.6	113	4.5	143	5.6	174	6.8
G	240	9.5	269	10.6	303	11.9	366	14.4	396	15.6
Kg/lb	12.9	28.5	25.3	55	42.2	93.1	60.8	134	100	220.6

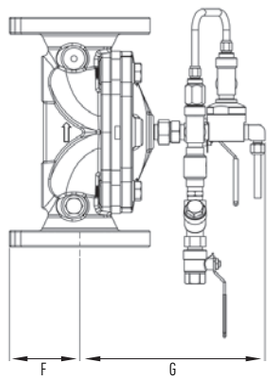

Factory Standard

MAIN VALVE:

BODY & COVER

- Ductile iron
- Cast Steel WCB
- Stainless Steel CF8
- Stainless Steel CF8M
- Nickel Aluminum Bronze

ELASTOMERS:

- NR, fabric reinforced Natural Rubber
- EPDM, fabric reinforced
- NBR, fabric reinforced Nitrile Rubber

COATING:

- Rilsan Polyamide based (Nylon 11)
- Polyester based EPC
- High built Epoxy FBE
- Vitreous Enamel (internal only)

TRIM

PIPING & TUBING:

- Stainless Steel 316
- Copper/Brass
- Cupro-Nickel
- Monel®

FITTINGS:

- Stainless Steel 316
- Brass
- Super Duplex
- Cupro-Nickel
- Monel®

ACCESSORIES:

- Brass Nickel plated
- Nickel Aluminium bronze
- Stainless steel CF8M
- Monel®
- Cupro-Nickel

PLEASE SPECIFY

- Working Media
- Ambiental conditions
- Min/Max operating flow
- Min/Max operating pressure
- Energize to Open/Close valve
- Wet Pilot's height
- System installation orientation
- Additional accessories needed

For more detailed technical information, please refer to chapter Engineering Data.

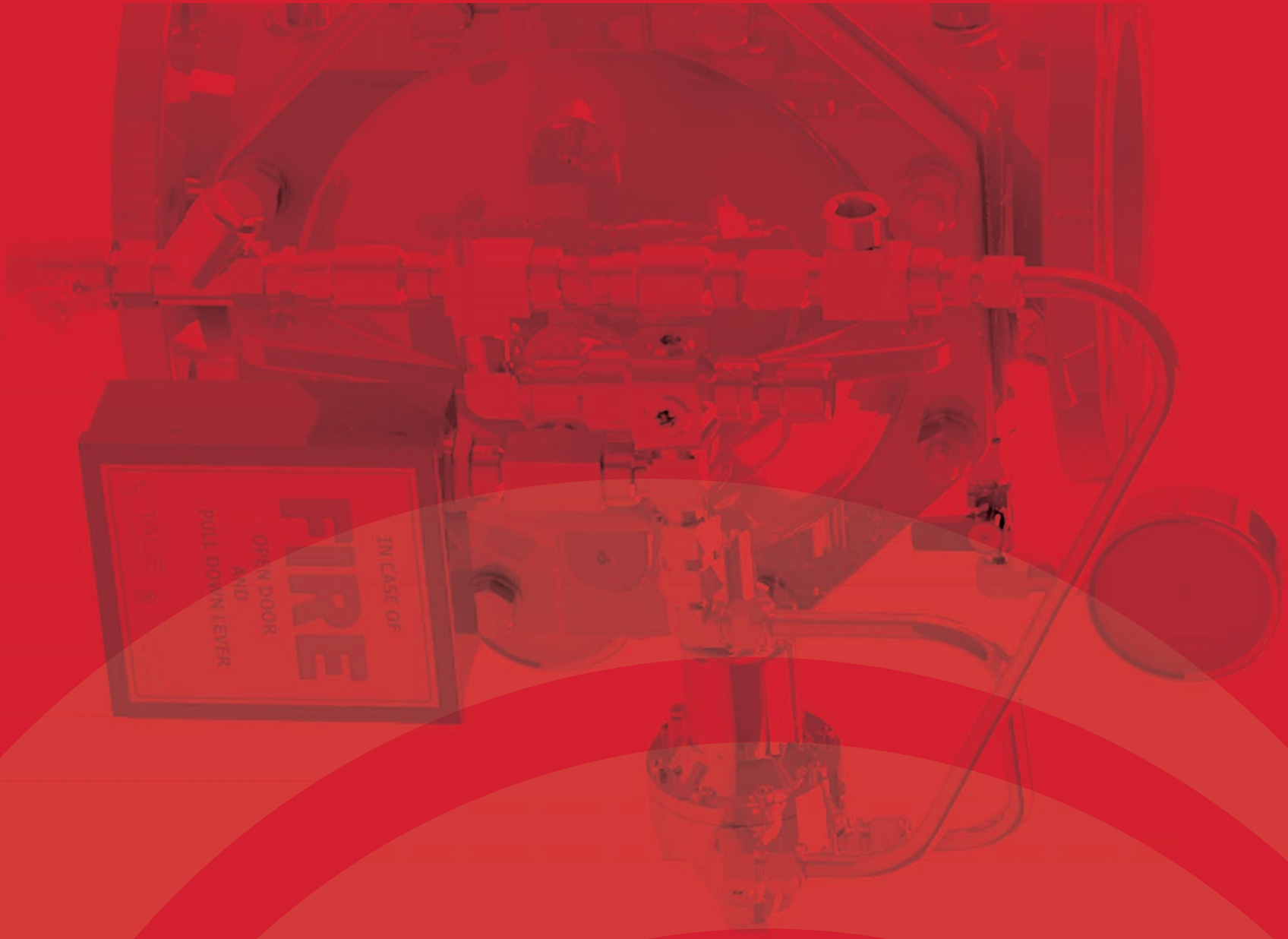
IN CASE OF
FIRE
OPEN DOOR
AND
PULL DOWN LEVER

ON/OFF VALVES

MONITOR VALVES

FDV-R-MH0 - 111

FDV-R-MH1 - 115

FDV-R-ME1 - 119

HYDRAULIC HYDRANTS

FDV-R-HH0 - 123

FDV-R-HHP - 127

Mechanical Hydrants

FDV-HM0 - 131

TALIS FP RANGE

Monitor Valves

Local Hydraulic Actuated Monitor Valve

FDV-R- MH0

The FDV-R-MH0 is a manually operated On-Off Fire Protection Monitor valve, designed to control the opening and closing of fire Monitors, in special hazard fire protection systems.
Assembled in horizontal or vertical position, the FDV-R-MH0 Monitor valve is locally commanded to open/close by a manual emergency valve.
Operating this valve, commands the main valve by pressurizing or de-pressurizing its control chamber, enabling aquick and effortless operation
The globe pattern, line pressure operated FDV-R-MH0 valve, features a direct elastomeric diaphragm seal, with no balancing spring or internal metallic wet components in the valve body.
The hydrodynamic pattern design, ensures high flow rates with minimum head loss.
This valve can be supplied upon request in a PRV configuration, were the monitor's pressure is reduced, to satisfy the system's design.

MARKETS

Marine
P.O.G.
Airports
Industry
Storage

TECHNICAL DATA

FLUID:
Water, Brackish water, Sea water, Foam

SIZE RANGE:
50mm to 200mm (2" to 8")

AVAILABLE CONNECTIONS ENDS:
Flange*Flange, Groove*Groove, Thread*Thread

PRESSURE NOMINAL:
250 psi (17.2 bar)

APPROVALS

ADVANTAGES

- Only three parts: body, diaphragm & cover plate, no wet metal spring inside the control chamber
- 3 way control principle ensure fast and reliable opening
- Open fail safe valve in high ambient temperatures
- Maintained in stand-by closed position
- Low maintenance cost: the valve is serviced in-line and only one replaceable part - the long-life elastomeric diaphragm
- Conforms with inspection, Testing and Maintenance Standard of water-based Fire Protection Systems, NFPA 25

CHARACTERISTICS

- Hydro-dynamic pattern design ensures high flowrates with minimum head loss
- The valve trips open by manually opening a 3 way ball valve and draining the valve's control chamber
- Closing the manual ball valve stops the control chamber's drainage and pressurizes it. By that, the monitor valve closes
- Soft closing controlled pressurization of the valve's control chamber, prevents surges

Schematic drawing

Set position

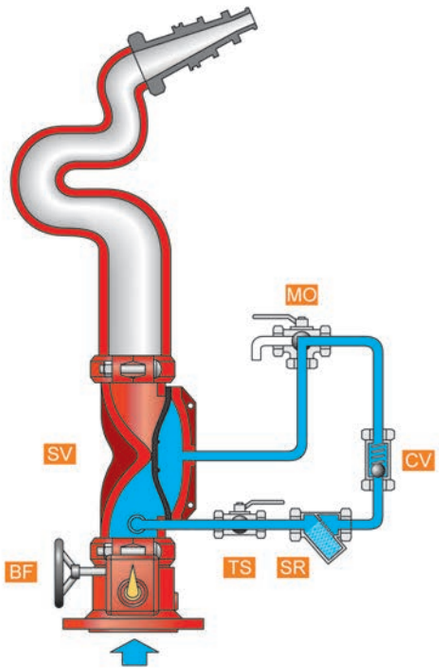

Fire position

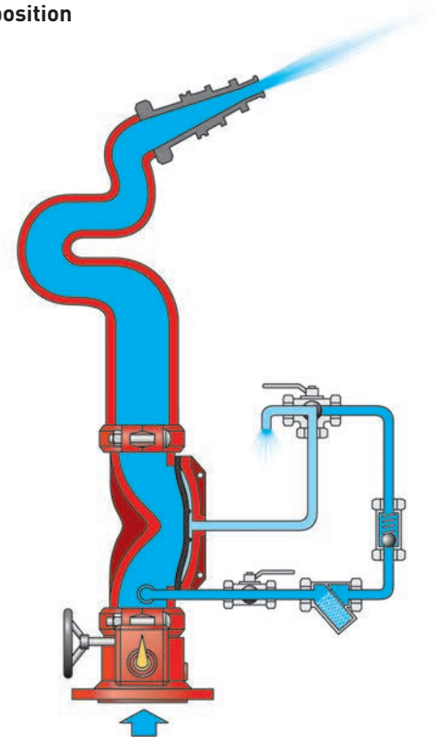

SV - FDV-R Valve
TS - Trim supply valve
SR - "Y" strainer
CV - Check valve
MO - Manual Operation valve (3 way)
BF - Butterfly valve

OPERATION

SET position

Pressurized water in the valve's control chamber (SV) is trapped by the Check Valve (CV), forces the valve's diaphragm against its seat and maintains the FDV-R valve close.

FIRE situation

Opening the Manual Operation valve (MO), drains the FDV-R's control chamber and opens the valve.

RESET position

Closing the Manual Operation valve, stops the FDV-R's control chamber drainage admits upstream pressure and pressurizes it. Consequently, the valve's diaphragm is forced to its seat and the valve closes.

FDV-R - MHO

Typical installation

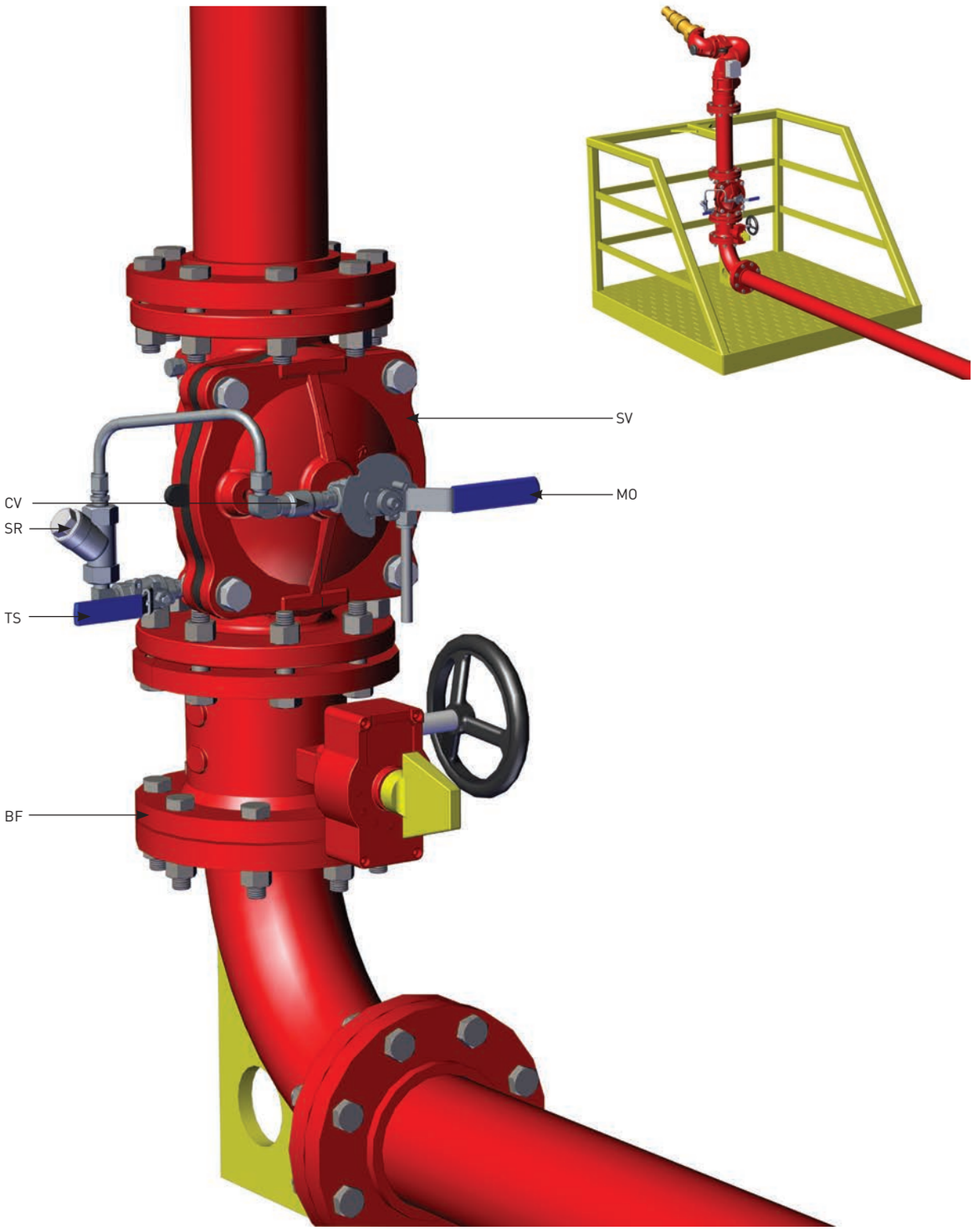

SV - FDV-R Valve
TS - Trim supply valve
SR - "Y" strainer
CV - Check valve
MO - Manual Operation valve (3 way)
BF - Butterfly valve

Dimensions Table

Size	2"		2.5"		3"		4"		6"		8"	
	mm	Inch	mm	Inch	mm	Inch	mm	Inch	mm	Inch	mm	Inch
A	196	7.7	204	8	212	8.3	231	9.1	282	11.1	283	11.1
B	82	3.2	93	3.7	100	3.9	111	4.4	158	6.2	178	7
C	16	0.6	7	0.3	-	-	-	-	-	-	-	-
D	190	7.5	215	8.5	283	11.1	305	12	406	16	470	18.5
E	8	0.3	-	-	-	-	-	-	-	-	-	-
F	82	3.2	89	3.5	100	3.9	109	4.3	142	5.6	160	6.3
G	187	7.4	201	7.9	214	8.4	233	9.2	288	11.3	356	14
Kg/lb	8.8	19.4	11.1	24.5	17.6	38.8	23.8	52.5	48.5	106.9	106.9	114.8

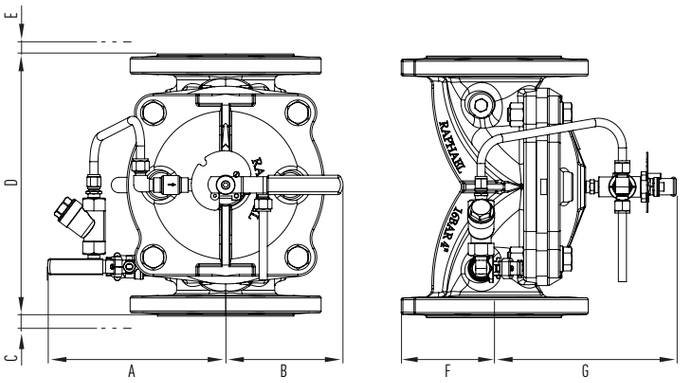

Factory Standard

MAIN VALVE:

BODY & COVER

- Ductile iron
- Cast Steel WCB
- Stainless Steel CF8
- Stainless Steel CF8M
- Nickel Aluminum Bronze

ELASTOMERS:

- NR, fabric reinforced Natural Rubber
- EPDM, fabric reinforced
- NBR, fabric reinforced Nitrile Rubber

COATING:

- Rilsan Polyamide based (Nylon 11)
- Polyester based EPC
- High built Epoxy FBE
- Vitreous Enamel (internal only)

TRIM

PIPING & TUBING:

- Stainless Steel 316
- Copper/Brass
- Cupro-Nickel
- Monel®

FITTINGS:

- Stainless Steel 316
- Brass
- Super Duplex
- Cupro-Nickel
- Monel®

ACCESSORIES:

- Brass Nickel plated
- Nickel Aluminium bronze
- Stainless steel CF8M
- Monel®
- Cupro-Nickel

PLEASE SPECIFY

- Working Media
- Ambiental conditions
- Min/Max operating flow
- Min/Max operating pressure
- System installation orientation
- Additional accessories needed

For more detailed technical information, please refer to chapter Engineering Data.

Monitor Valves

Remote Hydraulic Actuated Monitor Valve

FDV-R- MH1

The FDV-R-MH1 is a hydraulic controlled On-Off Fire Protection Monitor valve, designed to control the opening and closing of fire Monitors, in special hazard fire protection systems.

Assembled in horizontal or vertical position, the FDV-R-MH1 Monitor valve is commanded to open/close from a control panel or control room, by a hydraulic actuator. The actuator in turns, commands the valve bypressurizing or de-pressurizing the main valve's control chamber, enabling a quick and effortless operation.

The FDV-R-MH1 incorporates an emergency valve, bypassing all terms for a manual operation.

The globe pattern, line pressure operated FDV-R-MH1 valve features a direct elastomeric diaphragm seal, with no balancing spring or internal metallic wet components in the valve body. The hydrodynamic pattern design, ensures high flow rates with minimum head loss.

MARKETS

Marine
P.O.G.
Airports
Industry
Storage

TECHNICAL DATA

FLUID:
Water, Brackish water, Sea water, Foam

SIZE RANGE:
50mm to 200mm (2" to 8")

AVAILABLE CONNECTIONS ENDS:
Flange*Flange, Groove*Groove, Thread*Thread

PRESSURE NOMINAL:
250 psi (17.2 bar)

APPROVALS

ADVANTAGES

- Only three parts: body, diaphragm & cover plate, no wet metal spring inside the control chamber
- 3 way control principle ensure fast and reliable opening
- Open fail safe valve in high ambient temperatures
- Maintained in stand-by closed position
- Low maintenance cost: the valve is serviced in-line and only one replaceable part - the long-life elastomeric diaphragm
- Conforms with inspection, Testing and Maintenance Standard of water-based Fire Protection Systems, NFPA 25

CHARACTERISTICS

- Hydro-dynamic pattern design ensures high flowrates with minimum head loss
- The valve trips open automatically upon a gradual release of water pressure from its control chamber
- The trip is actuated by a hydraulic command pressure transferred by a pilot pipeline, operating a 3 way actuator
- Soft closing by controlled pressurization of the valve's control chamber, prevents surges

Schematic drawing

Set position

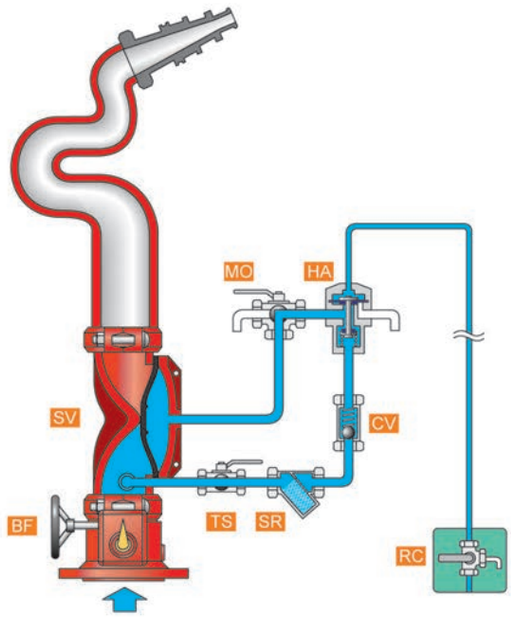

Fire position

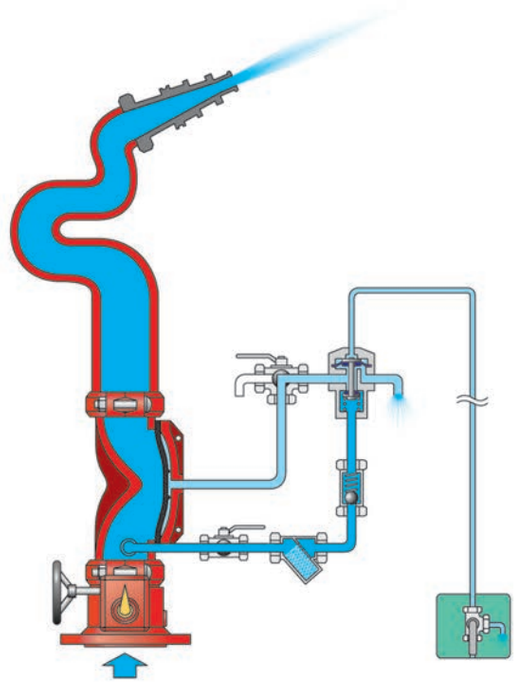

SV - FDV-R Valve
TS - Trim supply valve
SR - "Y" strainer
CV - Check valve
MO - Manual Operation valve (3 way)
HA - Hydraulic Actuator Valve (3 way)
BF - Butterfly valve

OPERATION

SET position

Pressurized water in the valve's control chamber (SV) is trapped by the Check Valve (CV), forces the valve's diaphragm against its seat and maintains the FDV-R valve close.

FIRE situation

A remote hydraulic command transferred by a pilot pipeline, pressurizes the Hydraulic Actuator valve's control Chamber (HA).
Consequently, the actuator change state and drains the FDV-R's Control Chamber. The valve opens and admits water to the monitor pipeline.
Opening the Manual Operation valve (MO), bypasses all term, drains the FDV-R's control chamber and opens the valve.

RESET position

As the pilot pipeline command pressure drops, the Hydraulic Actuator stops the FDV-R's control chamber drainage, admits upstream pressure and pressurizes it. Consequently, the valve's diaphragm is forces against its seat and the valve closes.

FDV-R - MH1

Typical installation

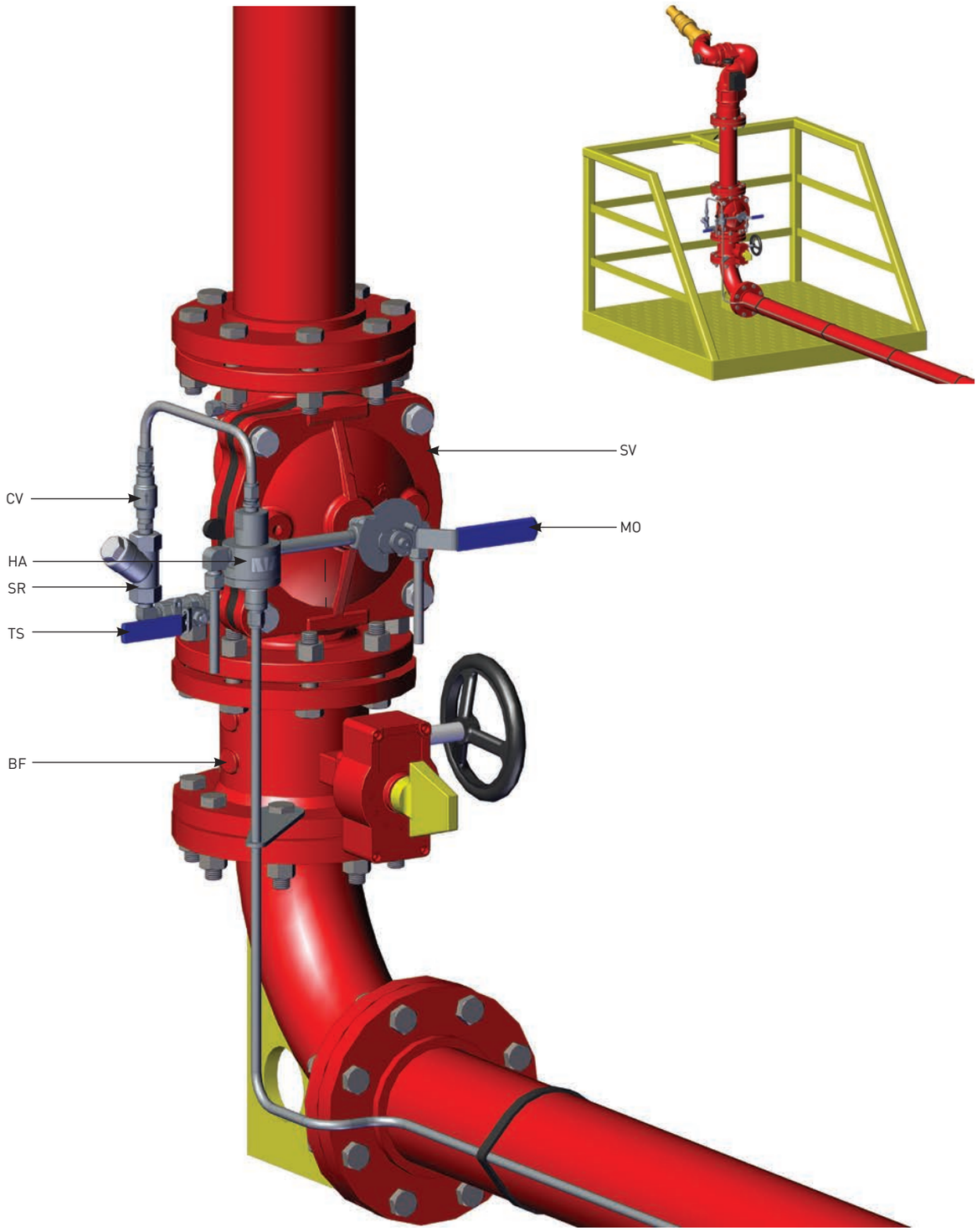

SV - FDV-R Valve
TS - Trim supply valve
SR - "Y" strainer
CV - Check valve
MO - Manual Operation valve (3 way)
HA - Hydraulic Actuator Valve (3 way)
BF - Butterfly valve

Dimensions Table

Size	2"		2.5"		3"		4"		6"		8"	
	mm	Inch	mm	Inch	mm	Inch	mm	Inch	mm	Inch	mm	Inch
A	196	737	204	8	212	8.3	232	9.1	216	8.5	242	9.5
B	82	3.2	93	3.7	100	3.9	11	0.4	142	5.6	177	7
C	18	0.7	4	0.2	-	-	-	-	-	-	-	-
D	190	7.5	215	8.5	283	11.1	305	12	406	16	470	18.5
E	90	3.5	77	3	13	0.5	-	-	-	-	-	-
F	82	3.2	89	3.5	106	4.2	109	4.3	142	5.6	160	6.3
G	188	7.4	202	8	208	8.2	232	9.1	288	11.3	356	14
Kg/lb	9.9	21.8	12.3	27.2	18.8	41.5	24.9	54.9	49.4	108.9	66.7	147

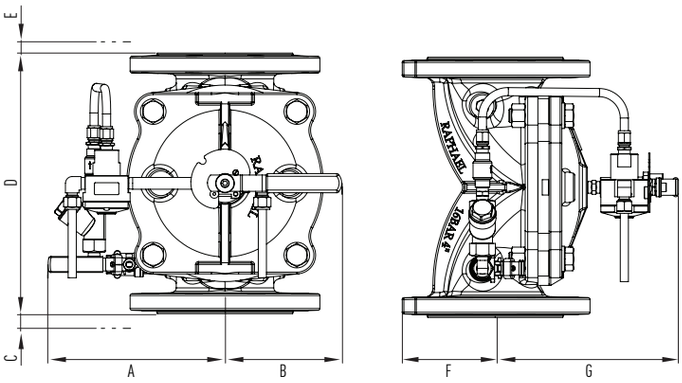

Factory Standard

MAIN VALVE:

BODY & COVER

- Ductile iron
- Cast Steel WCB
- Stainless Steel CF8
- Stainless Steel CF8M
- Nickel Aluminum Bronze

ELASTOMERS:

- NR, fabric reinforced Natural Rubber
- EPDM, fabric reinforced
- NBR, fabric reinforced Nitrile Rubber

COATING:

- Rilsan Polyamide based (Nylon 11)
- Polyester based EPC
- High built Epoxy FBE
- Vitreous Enamel (internal only)

TRIM

PIPING & TUBING:

- Stainless Steel 316
- Copper/Brass
- Cupro-Nickel
- Monel®

FITTINGS:

- Stainless Steel 316
- Brass
- Super Duplex
- Cupro-Nickel
- Monel®

ACCESSORIES:

- Brass Nickel plated
- Nickel Aluminium bronze
- Stainless steel CF8M
- Monel®
- Cupro-Nickel

PLEASE SPECIFY

- Working Media
- Ambiental conditions
- Min/Max operating flow
- Min/Max operating pressure
- System installation orientation
- Additional accessories needed

For more detailed technical information, please refer to chapter Engineering Data.

TALIS FP RANGE

Monitor Valves

Remote Electric Actuated Monitor Valve

FDV-R- ME1

The FDV-R-ME1 is an electric controlled On-Off Fire Protection Monitor valve, designed to control the opening and closing of fire Monitors, in special hazard fire protection systems.

Assembled in horizontal or vertical position, the FDV-R-ME1 Monitor valve is commanded to open/close from a control panel or control room, by a solenoid valve.The Solenoid in turns, commands the valve by pressurizing or de-pressurizing the main valve's control chamber, enabling a quick and effortless operation

The globe pattern, line pressure operated FDV-R-ME1 valve, features a direct elastomeric diaphragm seal, with no balancing spring or internal metallic wet components in the valve body. The hydrodynamic pattern design, ensures high flow rates with minimum head loss.

MARKETS

Marine
P.O.G.
Airports
Industry
Storage

TECHNICAL DATA

FLUID:
Water, Brackish water, Sea water, Foam

SIZE RANGE:
50mm to 200mm (2" to 8")

AVAILABLE CONNECTIONS ENDS:
Flange*Flange, Groove*Groove, Thread*Thread

PRESSURE NOMINAL:
250 psi (17.2 bar)

APPROVALS

ADVANTAGES

- Only three parts: body, diaphragm & cover plate, no wet metal spring inside the control chamber
- 3 way control principle ensure fast and reliable opening
- Open fail safe valve in high ambient temperatures
- Maintained in stand-by closed position
- Low maintenance cost: the valve is serviced in-line and only one replaceable part - the long-life elastomeric diaphragm
- Conforms with inspection, Testing and Maintenance Standard of water-based Fire Protection Systems, NFPA 25

CHARACTERISTICS

- Hydro-dynamic pattern design ensures high flowrates with minimum head loss
- The valve trips open automatically upon a gradual release of water pressure from its control chamber
- The trip is actuated by a solenoid (DN50 - DN100 valves) or indirectly, by a solenoid operating an actuator (DN150 – DN200 valves)
- Soft closing by controlled pressurization of the valve's control chamber, prevents surges

Schematic drawing

Set position

Fire position

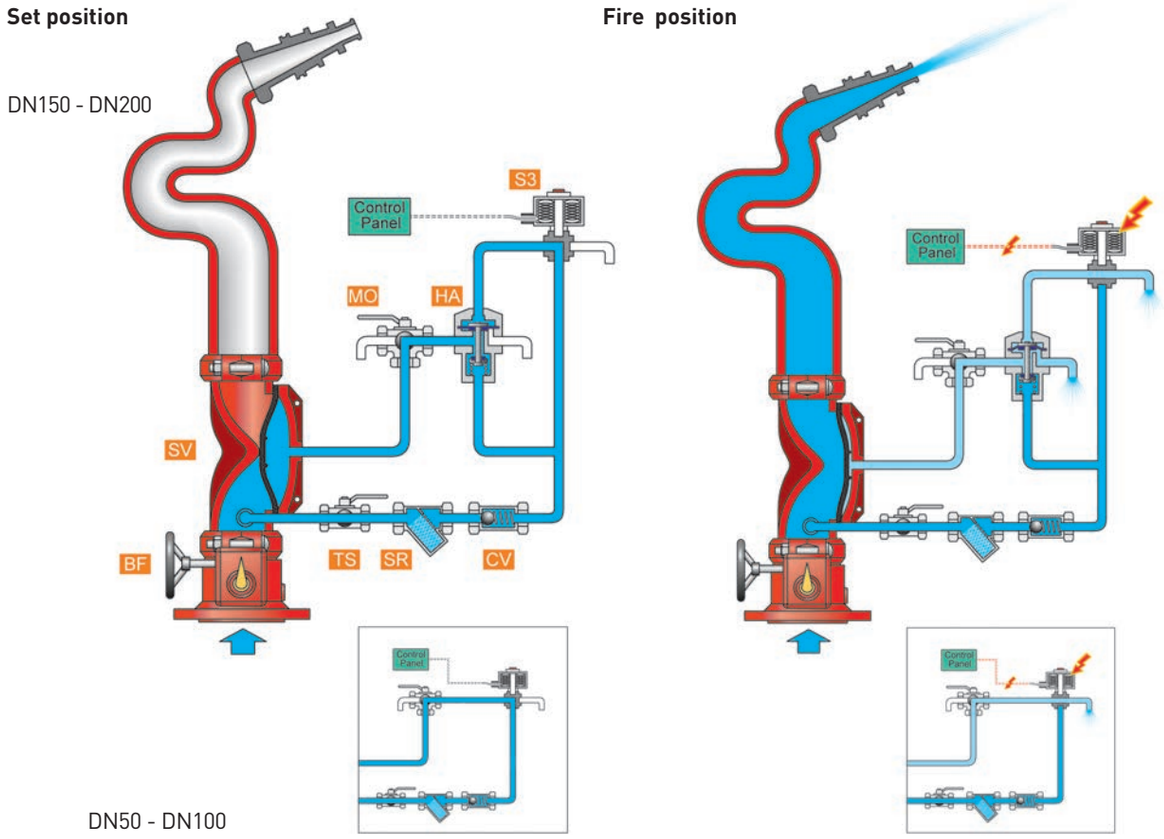

SV - FDV-R Valve
TS - Trim supply valve
SR - "Y" strainer
CV - Check valve
S3 - Solenoid valve (3 way)
MO - Manual Operation valve (3 way)
HA - Hydraulic Actuator Valve (3 way)
PF - Butterfly valve

OPERATION

SET position

Pressurized water in the valve's control chamber (SV) is trapped by the Check Valve (CV), forces the valve's diaphragm against its seat and maintains the FDV-R valve close.

FIRE situation

(DN50-DN100 valves) An electric signal transmitted, commands the 3 way solenoid valve (S3) to open and drain the FDV-R's control chamber. The valve opens and admits water to the monitor pipeline.
(DN150-DN200 valves) An electric signal transmitted, commands the 3 waysolenoid valve (S3) to open and drain the Hydraulic actuator's control chamber. Consequently, the actuator change state and drains the FDV-R's Control Chamber. The valve opens and admits water to the monitor pipeline.
Opening the Manual Operation valve (MO), bypasses all term, drains the FDV-R's control chamber and opens the valve.

RESET position

(DN50-DN100 valves) An electric signal transmitted, commands the 3 way solenoid valve (S3) to open and drain the FDV-R's control chamber. The valve opens and admits water to the monitor pipeline.
(DN150-DN200 valves) An electric signal transmitted, commands the 3 way solenoid valve (S3) to open and drain the Hydraulic actuator's control chamber. Consequently, the actuator change state and drains the FDV-R's Control Chamber. The valve opens and admits water to the monitor pipeline.
Opening the Manual Operation valve (MO), bypasses all term, drains the FDV-R's control chamber and opens the valve.

FDV-R - ME1

Typical installation

DN150 - DN200

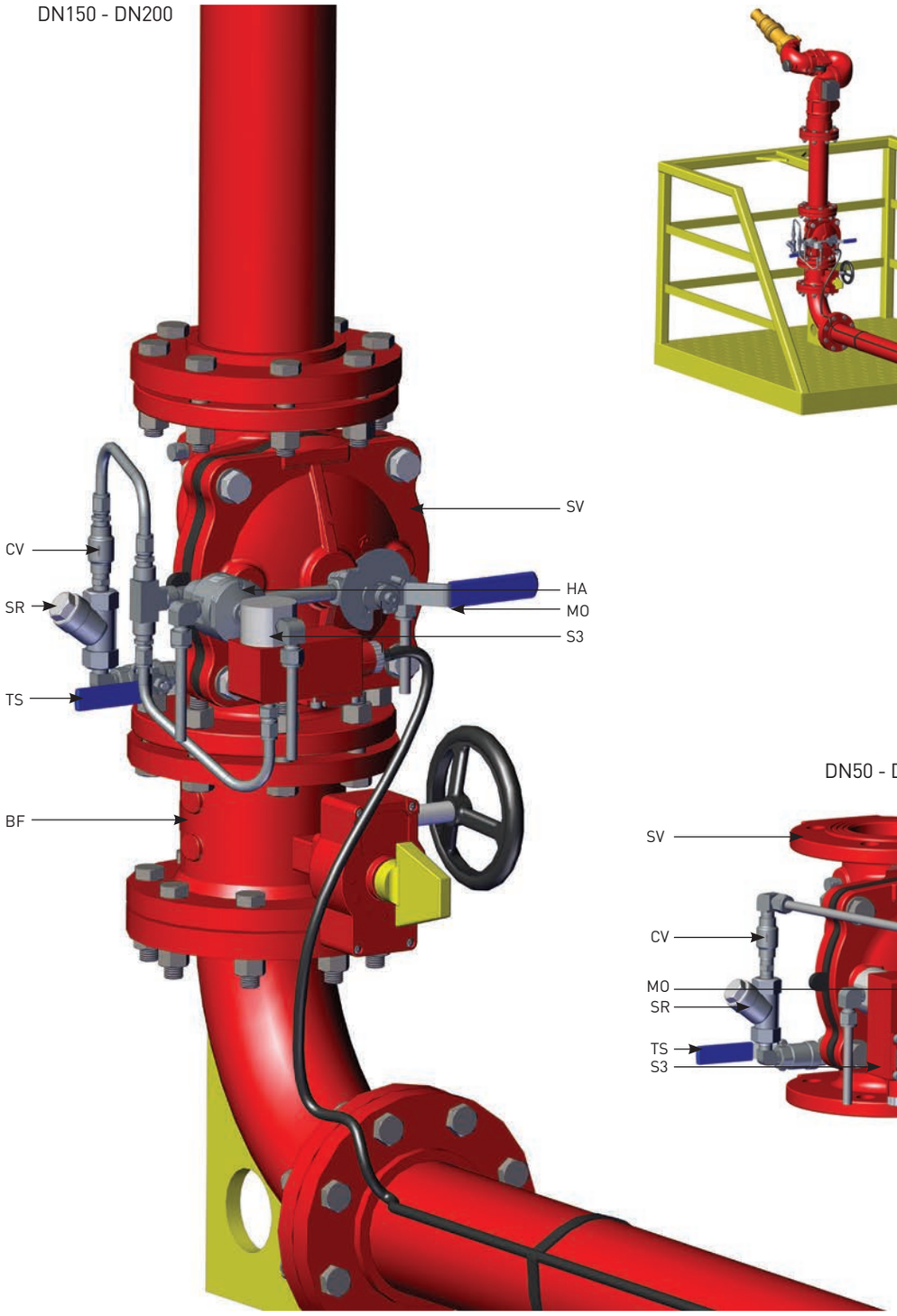

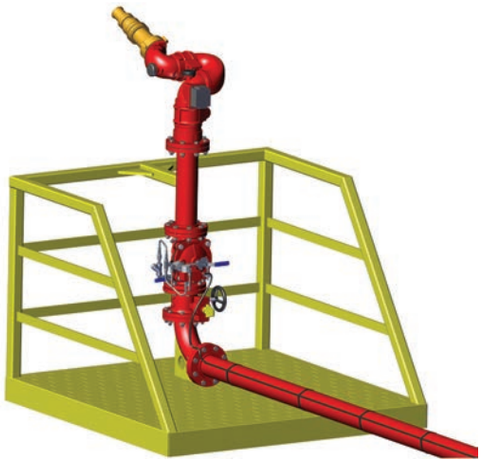

DN50 - DN100

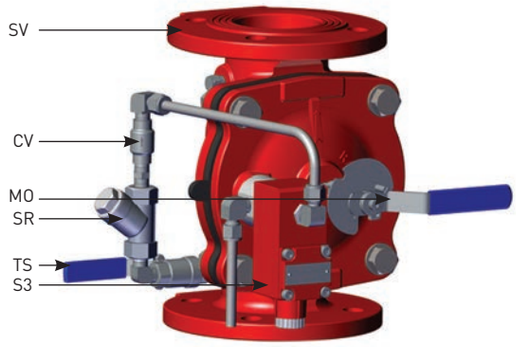

SV - FDV-R Valve
TS - Trim supply valve
SR - "Y" strainer
CV - Check valve
S3 - Solenoid valve (3 way)
MO - Manual Operation valve (3 way)
HA - Hydraulic Actuator Valve (3 way)
PF - Butterfly valve

Dimensions Table

Size	2"		2.5"		3"		4"		6"		8"	
	mm	Inch	mm	Inch	mm	Inch	mm	Inch	mm	Inch	mm	Inch
A	197	7.8	215	8.5	219	8.6	170	6.7	236	9.3	247	9.7
B	83	3.3	93	3.7	100	3.9	115	4.5	151	5.9	177	7
C	17	0.7	4	0.2	-	-	-	-	-	-	-	-
D	190	7.5	215	8.5	283	11.1	305	12	406	16	470	18.5
E	82	3.2	70	2.8	13	0.5	7	0.3	-	-	-	-
F	82	3.2	8.9	3.5	100	3.9	109	4.3	142	5.6	160	6.3
G	188	7.4	201	7.9	214	8.4	265	10.4	348	13.7	418	16.5
Kg/lb	10.2	22.5	12.6	27.8	19.2	42.3	25.5	56.2	51.4	113.3	68.8	151.7

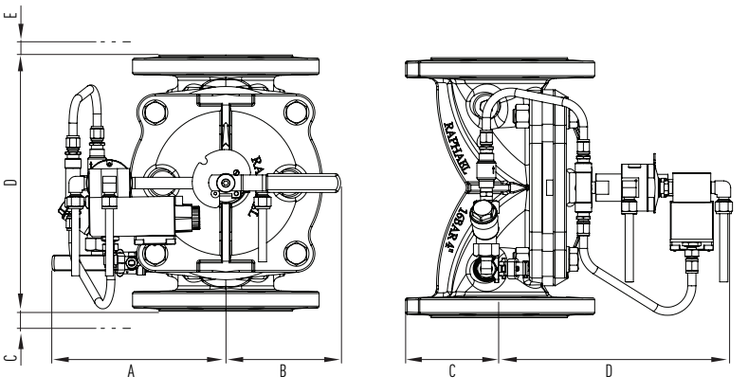

Factory Standard

MAIN VALVE:

BODY & COVER

- Ductile iron
- Cast Steel WCB
- Stainless Steel CF8
- Stainless Steel CF8M
- Nickel Aluminum Bronze

ELASTOMERS:

- NR, fabric reinforced Natural Rubber
- EPDM, fabric reinforced
- NBR, fabric reinforced Nitrile Rubber

COATING:

- Rilsan Polyamide based (Nylon 11)
- Polyester based EPC
- High built Epoxy FBE
- Vitreous Enamel (internal only)

TRIM

PIPING & TUBING:

- Stainless Steel 316
- Copper/Brass
- Cupro-Nickel
- Monel®

FITTINGS:

- Stainless Steel 316
- Brass
- Super Duplex
- Cupro-Nickel
- Monel®

ACCESSORIES:

- Brass Nickel plated
- Nickel Aluminium bronze
- Stainless steel CF8M
- Monel®
- Cupro-Nickel

PLEASE SPECIFY

- Working Media
- Ambiental conditions
- Min/Max operating flow
- Min/Max operating pressure
- Energize to Open/Close valve
- Solenoid Voltage
- Solenoid Enclosure
- Solenoid Protection
- System installation orientation
- Additional accessories needed

For more detailed technical information, please refer to chapter Engineering Data.

TALIS FP RANGE

Hydraulic Hydrants

Local Hydraulic Actuated, Hydrant Valve

FDV-Ra- HH0

The FDV-Ra-HH0 is a hydraulic controlled On-Off Fire Hydrant, designed to connect a pressurized fixed water supply network to a mobile extinguishing unit, through a fire brigade's quick coupling adapter.
Mounted on a breakage device or directly onto a riser, the FDR-Ra-HH0 Hydraulic Hydrant is locally commanded to open/close by a manual emergency valve. The manual emergency command valve by pressurizing or de-pressurizing the main valve's control chamber, enabling a quick and effortless operation of the Hydraulic Hydrant Designed for vertical installation, the Angle pattern, line pressure operated FDV-Ra-HH0 Hydraulic Hydrant, features a direct elastomeric diaphragm seal with no balancing spring or internal metallic wet components in the valve body. The hydrodynamic pattern design, ensures high flow rates with minimum head loss.

MARKETS

Marine, P.O.G., Airports, Industry, Storage, Tunnels

TECHNICAL DATA

FLUID:
Water, Brackish water, Sea water

SIZE RANGE:
50mm to 200mm (2" to 8")

AVAILABLE CONNECTIONS ENDS:
Flange*Hose Coupling, Groove*Hose Coupling, Thread*Hose Coupling

PRESSURE NOMINAL:
250 psi (17.2 bar)

ACCESSORIES UPON REQUEST:
Pressure gauge, Stand pipe, Breakage device

APPROVALS

ADVANTAGES

- Only three parts: body, diaphragm & cover plate, no wet metal spring inside the control chamber
- 3 way control principle ensure fast and reliable opening
- Open fail safe valve in high ambient temperatures
- Maintained in stand-by closed position
- Low maintenance cost: the valve is serviced in-line and only one replaceable part - the long-life elastomeric diaphragm
- Conforms with inspection, Testing and Maintenance Standard of water-based Fire Protection Systems, NFPA 25

Upon request:
A large selection of stand pipes, offered in various sizes, materials and coatings.
A brakeage device for water outlet prevention, in case of mechanical damage.

CHARACTERISTICS

- Hydro-dynamic pattern design ensures high flowrates with minimum head loss
- Simple and reliable design
- Quick respond and fast opening of the valve at emergency situation

Schematic drawing

Set position

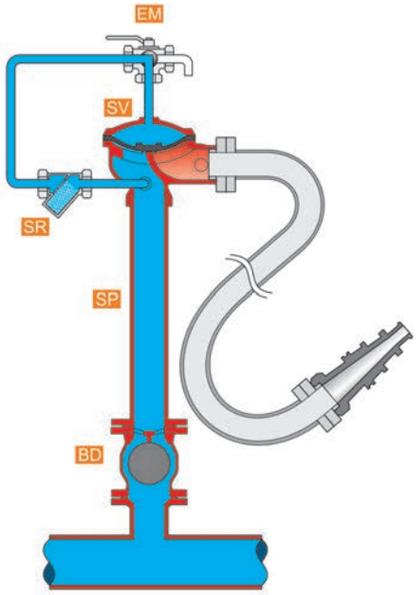

Fire position

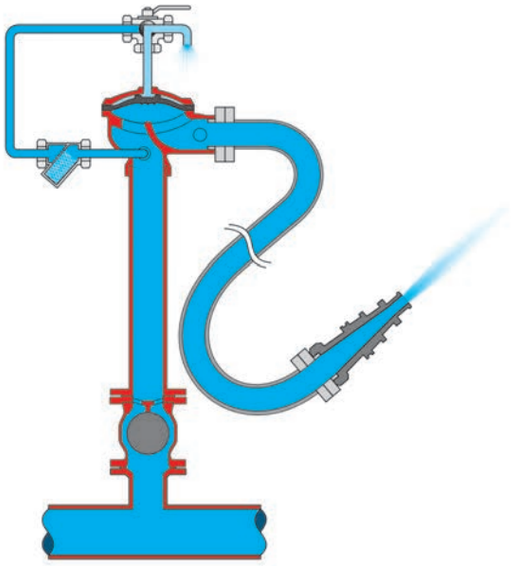

SV - FDV-R Valve
MO - Manual Operation valve (3 way)
SR - strainer
SP - Stand pipe
BD - Breakage device

OPERATION

SET position

Pressurized water in the valve's control chamber (SV) is trapped by the 3 way manual emergency valve (MO), forces the valve's diaphragm against its seat and maintains the FDV-R valve close.

FIRE situation

Opening the Manual Operation valve (MO), drains the FDV-R's control chamber and opens the valve.

FDV-Ra- HH0

Typical installation

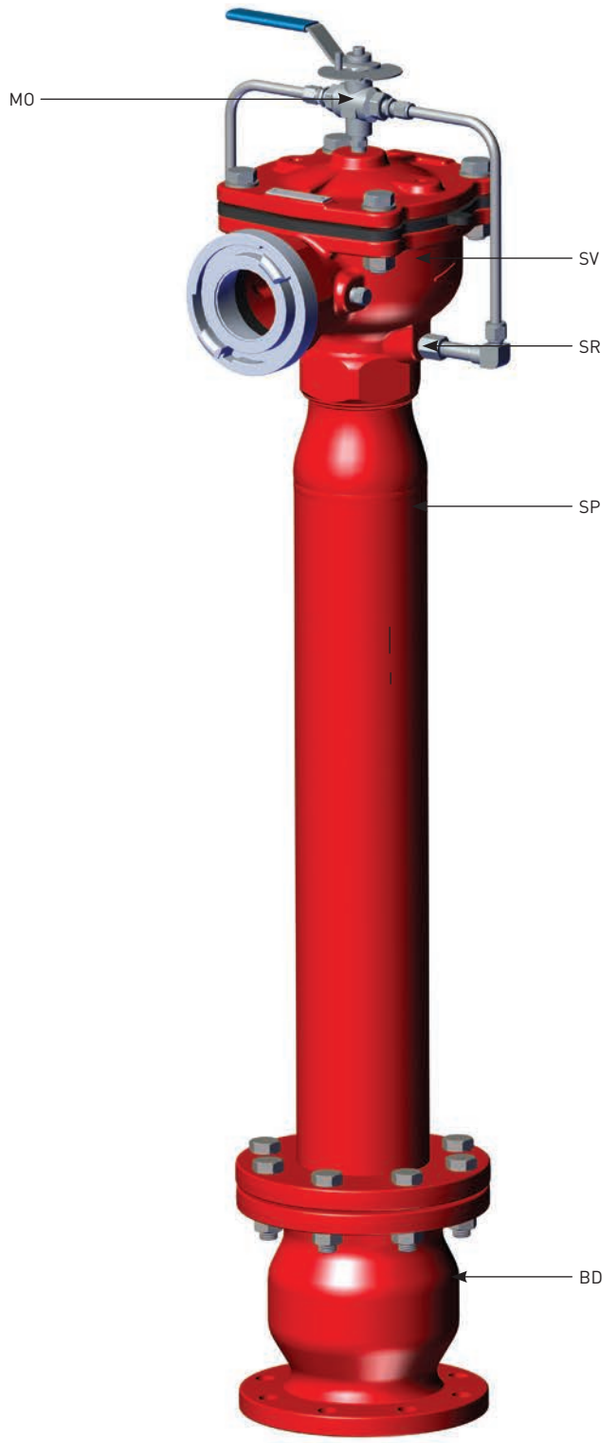

SV - FDV-R Valve
MO - Manual Operation valve (3 way)
SR - strainer
HA - Hydraulic Actuator Valve (3 way)
SP - Stand pipe
BD - Breakage device

Dimensions Table

Size	2"		3"		4"		6"		8"	
	mm	Inch	mm	Inch	mm	Inch	mm	Inch	mm	Inch
A	62	2.4	100.0	3.9	116.0	4.6	136.0	5.4	175.0	6.9
B	87	3.4	171.0	6.7	158.0	6.2	212.0	8.3	221.0	8.7
C	83	3.3	114.0	4.5	108.0	4.3	125.0	4.9	169.0	6.7
D	176	6.9	208.0	8.2	225.0	8.9	282.0	11.1	346.0	13.6
E	106	4.2	151.0	5.9	172.0	6.8	205.0	8.1	245.0	9.6
F	63	2.5	126.0	5.0	150.0	5.9	176.0	6.9	210.0	8.3
Kg/lb	5	11.0	14.0	30.8	25.0	55.0	47.0	103.4	71.0	156.2

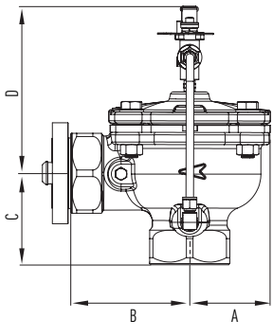

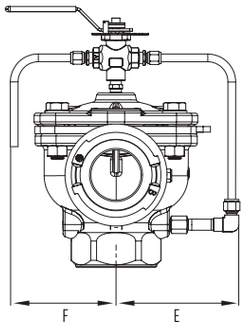

Factory Standard

MAIN VALVE:

BODY & COVER

- Ductile iron
- Cast Steel WCB
- Stainless Steel CF8
- Stainless Steel CF8M
- Nickel Aluminum Bronze

ELASTOMERS:

- NR, fabric reinforced Natural Rubber
- EPDM, fabric reinforced
- NBR, fabric reinforced Nitrile Rubber

COATING:

- Rilsan Polyamide based (Nylon 11)
- Polyester based EPC
- High built Epoxy FBE
- Vitreous Enamel (internal only)

TRIM

PIPING & TUBING:

- Stainless Steel 316
- Copper/Brass
- Cupro-Nickel
- Monel®

FITTINGS:

- Stainless Steel 316
- Brass
- Super Duplex
- Cupro-Nickel
- Monel®

ACCESSORIES:

- Brass Nickel plated
- Nickel Aluminium bronze
- Stainless steel CF8M
- Monel®
- Cupro-Nickel

PLEASE SPECIFY

- Working Media
- Ambiental conditions
- Min/Max operating flow
- Min/Max operating pressure
- Hose Connection type
- Additional accessories

For more detailed technical information, please refer to chapter Engineering Data.

TALIS FP RANGE

Hydraulic Hydrants

Hydraulic Actuated, Pressure Reducing Hydrant Valve

FDV-Ra- HHP

The FDV-R-HHP is a hydraulic controlled On-Off Fire Hydrant, designed to connect a pressurized fixed water supply network to a mobile extinguishing unit, through a fire brigade's quick coupling adapter.

Mounted on a breakage device or directly onto a standpipe, the FDR-R-HHP Hydraulic Hydrant is locally commanded to open/close by a manual emergency valve.

The manual emergency valve commands by pressurizing or de-pressurizing the Hydraulic Hydrant's control chamber, enabling a quick and effortless operation of the Hydraulic Hydrant.

Once commanded to open, the FDR-R-HHP valve acts as a pressure reducing valve, reducing the inlet water pressure to a pre-set desired outlet pressure. The outlet pressure is maintained constant regardless of fluctuations in flow rate and changes in main pipeline pressure.

Designed for vertical installation, the Angle pattern, line pressure operated FDV-R-HH0 Hydraulic Hydrant features a direct elastomeric diaphragm seal with no balancing spring or internal metallic wet components in the valve body. The hydrodynamic pattern design ensures high flow rates with minimum head loss.

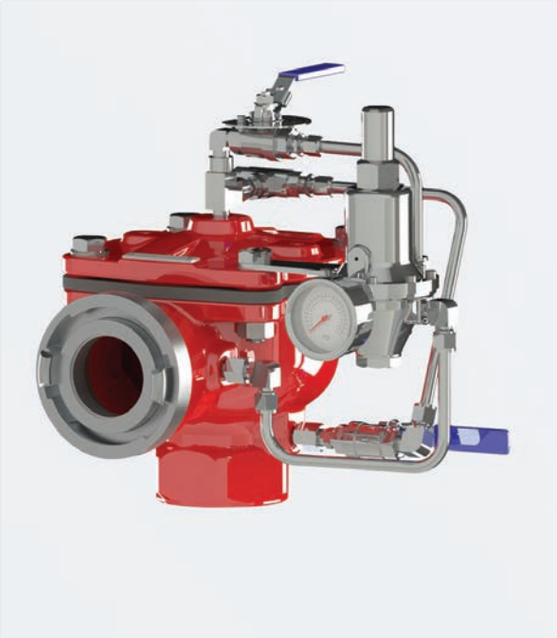

MARKETS

Marine, P.O.G., Airports, Industry, Storage, Tunnels

TECHNICAL DATA

FLUID:
Water, Brackish water, Sea water

SIZE RANGE:
50mm to 200mm (2" to 8")

AVAILABLE CONNECTIONS ENDS:
Flange*Hose Coupling, Groove*Hose Coupling, Thread*Hose Coupling

PRESSURE NOMINAL:
250 psi (17.2 bar)

REGULATION RATIO:
5:1

SENSITIVITY:
1.45 psi (0.1 Bar)

ACCESSORIES UPON REQUEST:
Pressure gauge, Stand pipe, Breakage device

APPROVALS

ADVANTAGES

- Only three parts: body, diaphragm & cover plate, no wet metal spring inside the control chamber
- 3 way control principle ensure fast and reliable opening
- Open fail safe valve in high ambient temperatures
- Maintained in stand-by closed position
- Low maintenance cost: the valve is serviced in-line and only one replaceable part - the long-life elastomeric diaphragm
- Conforms with inspection, Testing and Maintenance Standard of water-based Fire Protection Systems, NFPA 25

Upon request:
A large selection of stand pipes, offered in various sizes, materials and coatings.
A brakeage device for water outlet prevention, in case of mechanical damage.

CHARACTERISTICS

- Hydro-dynamic pattern design ensures high flowrates with minimum head loss
- Simple and reliable design
- Quick respond and fast opening of the valve at emergency situation
- Pressure reducing to a predetermined set of outlet pressure

Schematic drawing

Set position

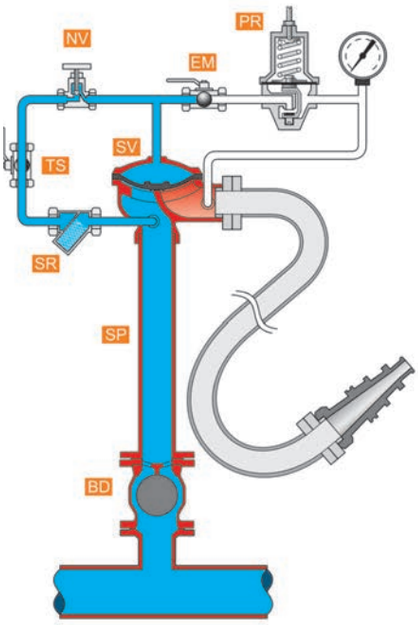

Fire position

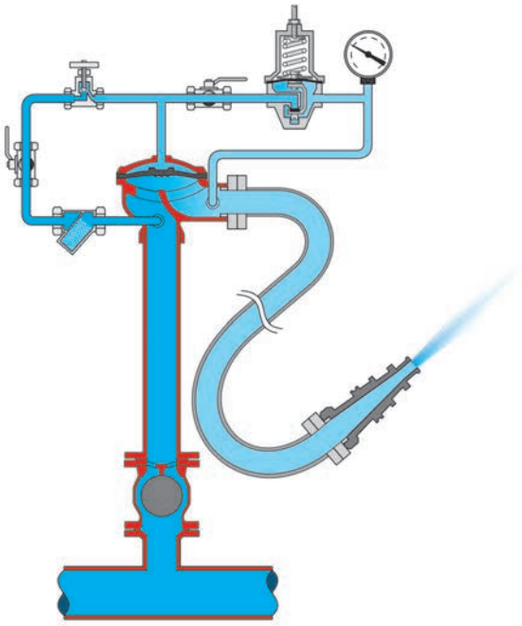

PR - PRDV-pressure reducing pilot vale
EM - Manual Operation valve (2 way)
NV - Needle valve
TS - Trim supply valve
SR - Strainer
SV - FDV-R Valve
SP - Standpipe
BD - Breakage device

OPERATION

SET position

Pressurized water in the valve's control chamber (SV) is trapped by the 2 way manual emergency valve (MO), forces the valve's diaphragm against its seat and maintains the FDV-Ra valve close.

FIRE situation

Opening the Emergency Manual Operation valve (EM), drains the FDV-Ra's control chamber through the pressure reducing pilot (PR) and opens the valve, maintaining a fixed outlet set pressure.

FDV-Ra- HHP

Typical installation

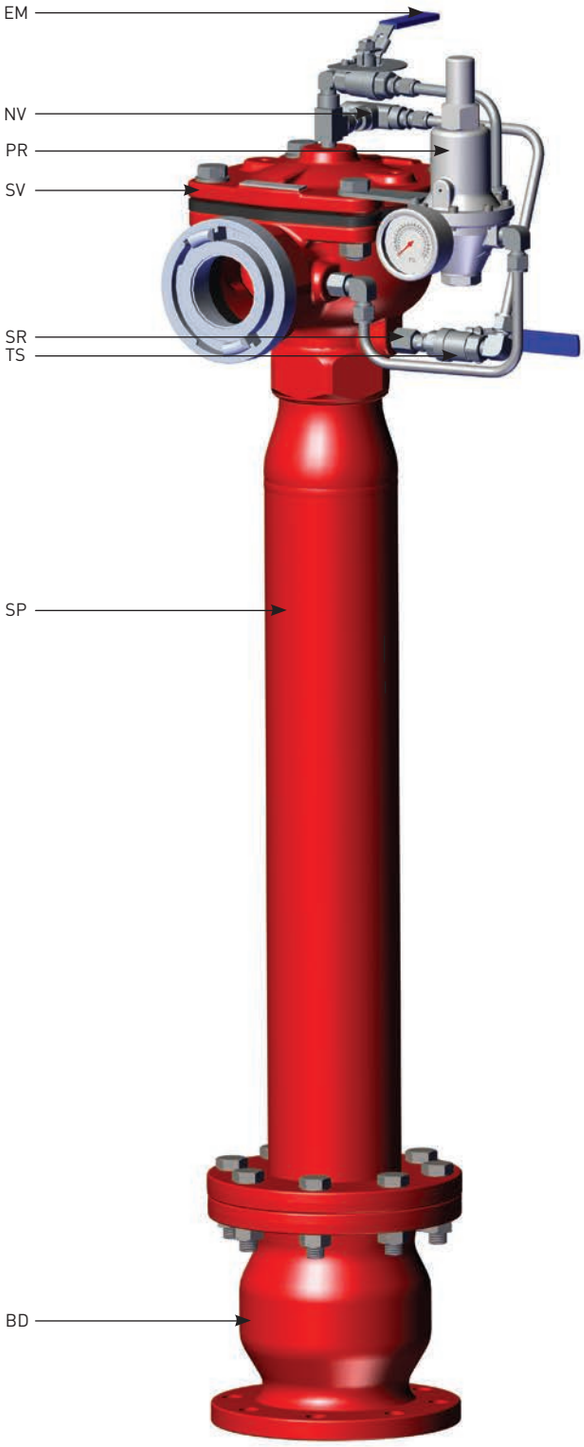

PR - PRDV-pressure reducing pilot vale
EM - Manual Operation valve (2 way)
NV - Needle valve
TS - Trim supply valve
SR - Strainer
SV - FDV-R Valve
SP - Standpipe
BD - Breakage device

Dimensions Table

Size	2"		3"		4"		6"		8"	
	mm	Inch	mm	Inch	mm	Inch	mm	Inch	mm	Inch
A	98	3.9	100.0	3.9	107.0	4.2	136.0	5.4	175.0	6.9
B	92	3.6	149.0	5.9	175.0	6.9	212.0	8.3	221.0	8.7
C	83	3.3	114.0	4.5	108.0	4.3	142.0	5.6	169.0	6.7
D	178	7.0	210.0	8.3	227.0	8.9	284.0	11.2	348.0	13.6
E	210	8.3	245.0	9.6	257.0	10.1	303.0	11.9	328.0	12.9
F	63	2.5	101.0	4.0	114.0	4.5	151.0	5.9	179.0	7.0
Kg/lb	8.5	18.7	17.0	37.4	28.0	61.6	50.0	110.0	74.0	162.8

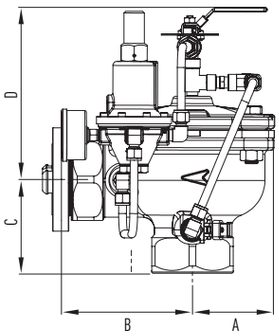

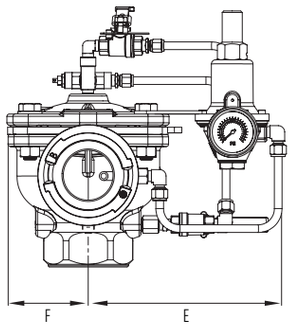

Factory Standard

MAIN VALVE:

BODY & COVER

- Ductile iron
- Cast Steel WCB
- Stainless Steel CF8
- Stainless Steel CF8M
- Nickel Aluminum Bronze

ELASTOMERS:

- NR, fabric reinforced Natural Rubber
- EPDM, fabric reinforced
- NBR, fabric reinforced Nitrile Rubber

COATING:

- Rilsan Polyamide based (Nylon 11)
- Polyester based EPC
- High built Epoxy FBE
- Vitreous Enamel (internal only)

TRIM

PIPING & TUBING:

- Stainless Steel 316
- Copper/Brass
- Cupro-Nickel
- Monel®

FITTINGS:

- Stainless Steel 316
- Brass
- Super Duplex
- Cupro-Nickel
- Monel®

ACCESSORIES:

- Brass Nickel plated
- Nickel Aluminium bronze
- Stainless steel CF8M
- Monel®
- Cupro-Nickel

PLEASE SPECIFY

- Working Media
- Ambiental conditions
- Min/Max operating flow
- Min/Max operating pressure
- Downstream set pressure
- Hose Connection type
- Additional needed accessories

For more detailed technical information, please refer to chapter Engineering Data.

MECHANICAL HYDRANTS

THE MAIN PURPOSE OF HYDRANTS IS THE WITHDRAWAL OF WATER FOR EXTINGUISHING FIRES. THEY ARE CONNECTED DIRECTLY TO THE UNDERGROUND DRINKING WATER NETWORK.

THE TALIS HYDRANTS ARE AVAILABLE IN TWO DESIGNS, UNDERGROUND AND STAND POST HYDRANTS, WHICH OFFER SPECIAL ADVANTAGES DEPENDING ON THE AREA OF APPLICATION.

THE WIDE RANGE OF HYDRANTS MEET THE MOST STRINGENT FIRE REQUIREMENTS AND COMPLY WITH ALL INTERNATIONAL STANDARDS, APPROVALS AND TESTING REQUIREMENTS.

65%
OF HYDRANT IN EUROPE ARE UNDERGROUND VERSION

EASY
TO INSTAL

WIDE RANGE
WITH ALL RELEVANT APPROVALS

50
YEARS LIFE SPAN

SIMPLE
FOR MAINTENANCE

OPTIMUM
CORROSION PROTECTION

TALIS' ANSWERS

TALIS group has established in France a **hydrant center of competency**
which centralizes all new development and oversees three R&D engineering offices in Europe.
This organization allows us to share our expertise and pool our technical know-how in order to continually improve our range.

Sharing ideas allows us to be more **creative and innovative** to meet the user requirements and anticipate their needs. These smart products are the latest development to help water companies improve their water network efficiency and identify Non-Revenue Water.

A broad range of products **in both underground and standpost design,** offers suitable solutions for all areas of application.
We provide to our customers with a high degree of flexibility to fulfill their many requirements. The products are provided with the outlet types required by the country's standards, a breakable system to avoid leakage in case of impact and a quick repair kit to reduce the cost of maintenance.

Robust, designed for durability, the products are made in spheroidal cast iron. The quality of the materials used, that are in contact with water, as well as the coating, increase the lifetime of the products.
Some standpost are offered with a protective mantle providing protection to the users from the bayonet connections also protecting the standpost pipe from aggressive climatic conditions.
All products have an optimized design to reduce installation, maintenance and operational costs for customers.

Various coating for high level of corrosion protection,
depending the country's requirements, TALIS group is able to supply three different coating types

- Epoxy by cataphoresis: Combining the advantages of both processes (cataphoresis + Epoxy) to ensure effective corrosion protection by limiting the overall coating thickness that can cause a lower impact resistance.
- Enamelled: Enamel is a vitreous, high-strength material, wherein short fibres in the material form a durable and permanent bond with the metallic substrate material, which prevents the enamel from cracking in the event of damage.
- DUPLEX corrosion protection: An innovative corrosion protection system made up of two components: zinc as a basic coat and a topcoat, on an EP/PUR basis, as the second coat.

BAYARD HYDRANT

SINCE THE BEGINNING OF THE 20TH CENTURY, BAYARD HAS ACQUIRED A HUGE KNOW HOW IN THE FIRE PROTECTION SEGMENT AND HAS DEVELOPED A WIDE RANGE OF FIRE HYDRANTS. THEIR INNOVATIONS AND THE QUALITY OF THEIR PRODUCTS HAVE PROPELLED THEM TO NATIONWIDE PROMINANCE. FOR MORE THAN 50 YEARS BAYARD HAS STOOD UP AS A LEADER IN THE FRENCH MARKET WITH A 65% MARKET SHARE AND MORE THAN 700 000 STANDPOSTS AND UNDERGROUNDS INSTALLED IN FRANCE.

A LEADING RANGE OF HYDRANTS

complying with the highest customer requirements in respect of French regulations

EMERAUDE RANGE

SAPHIR RANGE

WHICH TYPE OF CONNECTION IS IT?

Everywhere in France, all fire hydrants have an identification colour which is helpful for fireman to save precious time on site in order to choose the right type of hose to connect to them.

Two levels of information are given by the product:

- Type of water network indicated by colour of product body (SAPHIR range) or protective mantle (EMERAUDE range).
- Diameter / flow rate of network indicated by the colour of sticker on protective mantle (EMERAUDE range) or size of product (SAPHIR range).

	RED	BLUE	YELLOW
TYPE OF NETWORK	Under pressure	Suction application	Surpressed network
EMERAUDE	DN80 DN100 DN150		
SAPHIR			

EMERAUDE installed on the city water network

Vintage design for old down town installation

Suction fire hydrant installed when water network is not available

SAPHIR DN150

SAPHIR DN100

EMERAUDE DN100

BAYARD RETHINKS THE FIRE PROTECTION

8 optimized standpost offers with protective mantle or apparent outlets

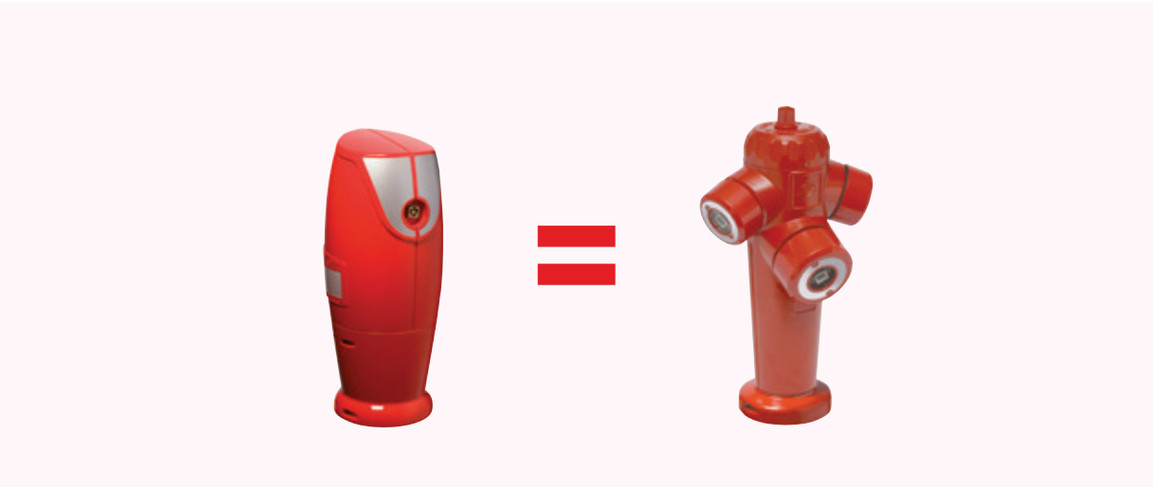

EACH NEEDS IS CORRESPONDING AN OFFER

BRONZE

AS SUCCESSFUL AS IT IS ESSENTIAL

SILVER

OPTIMIZED MAINTENANCE

+ product

- REMOVABLE DRAIN

GOLD

PREMIUM QUALITY

+ product

- 250µm COATING
- STAINLESS STEEL AND BRONZE COMPOMENTS
- EXTENDED WARRANTY

SMART

A REALTIME MONITORING OF THE FIRE HYDRANTS FLEET

+ product

- TAGUA
- COPERNIC FACTORY FITTED

	EMERAUDE BRONZE AS SUCCESSFUL AS IT IS ESSENTIAL	EMERAUDE SILER OPTIMIZED MAINTENANCE	EMERAUDE GOLD PREMIUM QUALITY	EMERAUDE SMART WEB CONNECTION 24H/24
Composite hood	●	●	●	●
Air Clap	●	●	●	●
Valve guide: anti-hammer and anti-vibration	●	●	●	●
Internal/external epoxy coating	●	●	250 microns	●
360° oriented	●	●	●	●
DN65 to DN100	●	●	●	●
Traffic & No traffic versions	●	●	●	●
5 years of warranty on the components	●	●	10 years	●
TAGUA asset management	*FREE*	*FREE*	*FREE*	*FREE*
Fixed drain	●			
Removable drain		●	●	●
Upper part: red polyester painting		●	●	●
Stainless steel components			●	
Bronze seat			●	
Copernic – network connection	*OPTION*	*OPTION*	*OPTION*	●

	SAPHIR BRONZE AS SUCCESSFUL AS IT IS ESSENTIAL	SAPHIR SILER OPTIMIZED MAINTENANCE	SAPHIR GOLD PREMIUM QUALITY	SAPHIR SMART WEB CONNECTION 24H/24
Air Clap	●	●	●	●
Valve guide: anti-hammer painting	●	●	●	●
Internal/external epoxy coating	●	●	250 microns	●
360° oriented	●	●	●	●
DN65 to DN100	●	●	●	●
Traffic & No traffic versions	●	●	●	●
5 years of warranty on the components	●	●	10 years	●
TAGUA asset management	*FREE*	*FREE*	*FREE*	*FREE*
Fixed drain	●			
Removable drain		●	●	●
Upper part : red polyester painting	●	●	●	●
Stainless steel components			●	
Bronze seat			●	
Copernic – network connection	*OPTION*	*OPTION*	*OPTION*	●

3
CONNECTION POSSIBILITIES

WEB CONNECTION WEB 24H/24

product

TAGUA & COPERNIC FACTORY FITTED

OPTION, POSSIBLE TO INSTALL COPERNIC ON

CONNECT ALL YOUR STANDPOSTS ALREADY INSTALLED

INTEGRATE THE ASSET MANAGEMENT TAGUA™ MONITORING FIRE HYDRANT WITH COPERNIC™ SOLUTION

BAYARD RANGES HAVE BEEN DEVELOPED TO SAVE MAINTENANCE COST, TO SAFE ITS USAGE BY FIREMEN AND TO PROTECT THE WATER NETWORK.

EASY FOR THE MAINTENANCE

Among multiple benefits offered by the BAYARD range, one of the most important is the backward compatibility of spare parts. Since 1973 the ranges has been improved in order to retain internal backward compatibility of spare parts for all models, reducing the need for customers to keep spare parts in stock.

The annual maintenance of the valves can be done from above, thus avoiding the need to dig. The spindle can be removed easily for the top of the hydrant.

THE SECURITY FOR USERS

The air clap's function is to decompress the pillar hydrant. In case of wrong handling, the stand post may come under pressure from the residual water inside. Handling the stand post to open an outlet can therefore be dangerous. By pressing the clap air, the air will be dispelled, permitting the outlet to be opened safely. The water will remain in the pillar without being ejected.

THE PROTECTION OF WATER NETWORK

In case of quick opening and closing fire hydrant, the special design of the shut off valve prevents water hammer, while its shape drastically reduces the vibrations which could damage the water pipe.

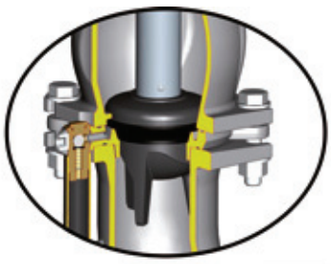

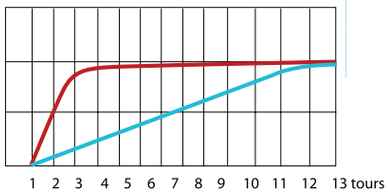

Progressive closing, blue curve

EASY TO INSTALL

Whatever the ground configuration for a primary installation or after works on streets, standposts and undergrounds may be raised and adapted to all heights with **adjustable** pipes.

The product can be handled easily without causing damage thanks to the **polyester packaging.**

Full range from DN65 to DN150 adapted for **freezing and hot climatic** conditions .

ERHARD HYDRANT

ERHARD HYDRANTS ARE AVAILABLE IN TWO BASIC DESIGNS WHICH OFFER SPECIAL ADVANTAGES DEPENDING ON THE AREA OF APPLICATION:

- THE **UNDERGROUND HYDRANT** IS NOT A TRAFFIC OBSTACLE AND, THANKS TO ITS POSITION, SAFE FROM DAMAGE.

- IN CONTRAST, THE **POST HYDRANT** IS ALWAYS EASILY VISIBLE, EVEN IN THE DARK OR SNOW. ANOTHER ADVANTAGE IS THAT NO ADDITIONAL STANDPIPE IS NEEDED TO WITHDRAW WATER, WHICH MEANS WATER IS AVAILABLE IMMEDIATELY.

With its broad range of products in both product areas, ERHARD offers suitable solutions for every area of application and has thus been a tried-and-trusted partner to utilities companies and fire brigades all over the world for many years. The range is supplemented by suitable accessories such as extensions, protective covers, bayonet connections and much more besides.

In contrast to valves in systems, hydrants are installed in the public space and have to be able to be operated easily and safely by fire officers in the event of a fire.

Post hydrants are also exposed permanently to the weather, which must not have any limiting effect on function. For this reason, the most stringent requirements are applicable for hydrants in terms of operational safety and durability.

PROPERTIES AND ADVANTAGES AT A GLANCE

1 Maximum tightness long-term
Double cut-off with ball on enamelled seat and PUR shut-off cone

2 Inner fittings are not ejected during maintenance or dismantling work
Safety interlock, stop and anti-rotation grip for the inner fittings

3 Durability and operational safety even after many years
Top material quality and perfect corrosion protection e.g. through sleeve pipes enamelled on the inside, blind threaded holes, galvanised square caps or bonnets made of cast aluminium

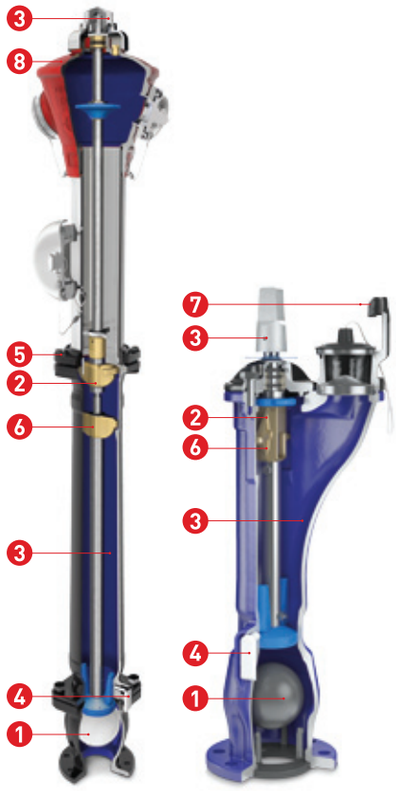

4 Hygiene and frost protection
Safe water draining through draining valve and draining pipe with dry section

5 Ease of service and repairs
Defined break system on the post hydrants, continuously adjustable rotation

6 Low actuating torques during opening Integrated thrust washers

7 Safe vibration-free operation
Bayonet with special lug for anchoring the standpipe hydrant head inside and out- side blue enamelled, outside additionally red enamelled Inside: smooth surface, hygienic, against deposits. Outside: resis

ERHARD hydrants have numerous well-thought-out design features guarantee users reliable operation and maximum safety.

CUT-OFF PROVIDES MAXIMUM SAFETY THANKS TO PUR CONE AND MULTI-CHAMBER BALL

The shut-off cone in ERHARD hydrants is connected to the valve insert pipe by a secure compression connection and thus reliably seals the enamelled seat of the bottom part of the post.

DOUBLE CUT-OFF

The safety system is supplemented by an additional cut-off with a multi-chamber ball or a steel plate ball in the case of underground hydrants. This closes the seal on the inlet fitting solely through water pressure and thus guarantees double safety.

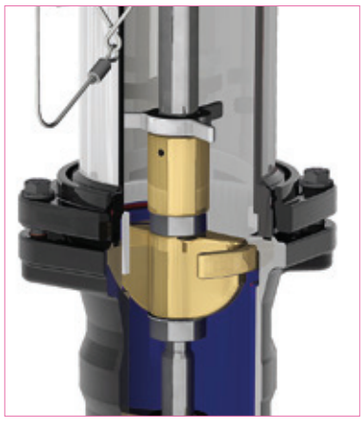

SOPHISTICATED SAFETY INTERLOCK

ERHARD post hydrants are equipped with a safety interlock directly under the break system. This reliably prevents ejection of the inner set of fittings, should the working pressure be unforeseeably applied at the shut-off cone when the hydrant is dismantled.

SERVICE-FRIENDLY BREAK SYSTEM AND ROTATION OF THE UPPER PART OF THE POST

The break system can easily be repaired in the event of damage (e.g. if the hydrant is damaged in an accident). The break ring safely protects all the internal drive parts from damage. The design also allows the upper part of the post to be turned continuously through 360° after the connection bolts have been loosened.

RELIABLE DRAINING

After the hydrant has been used, a draining valve on the hydrant head together with a draining pipe on the main shut-off valve, which has a sufficient dry section, ensures reliable discharge of the residual water. This guarantees reliable hygiene and safe frost protection.

TOP MATERIAL QUALITY AND OPTIMUM CORROSION PROTECTION

- All the casing parts made of ductile cast iron are protected on the inside by ERHARD Pro-Enamel enamelling. Alternatively, stainless steel may be used for the upper parts of the posts.
- The drive parts are also made of stainless materials, making them predestined for decades of use in the ground
- The outer casing parts underground are coated with an enamel primer and double coating of synthetic resin.
- Special protection is required for the outer casing parts above ground, where the DUPLEX system – comprising zinc spraying and a double EP / PUR-based top coating – or full enamelling with ERHARD Pro-Enamel is used.

ERHARD UNDERGROUND HYDRANT

- The innovative shut-off cone makes the ERHARD underground hydrant DN80 with PUR cone particularly durable, since the PUR sheathing of the shut-off cone results in very high abrasion resistance and thus low wear. At the same time it is insensitive to dirt and has a very good tear propagation resistance and a high ageing resistance. It goes without saying that the ERHARD underground hydrant with PUR cone is also fitted with a safety interlock for the inner set of fittings which prevents their dangerous ejection during dismantling.

- During improper dismantling e.g. in an attempt to remove the inner set of fittings under operational pressure, the pressurised inner set of fittings is not ejected outwards but rather trapped by a safety stop. The underground hydrant is made completely in ERHARD Pro-Enamel for optimum corrosion protection.

- The ERHARD underground hydrant with flange connection is available with different claw-covers:
  - Claw-cover made of plastic
  - Self-locking claw-cover made of EN-JS1050
  - Claw-cover which remains open, made of EN-JS1050

An optimized design for all ERHARD ranges in order to minimize the pressure losses

Operation without cavitation to 1,3 times capacity

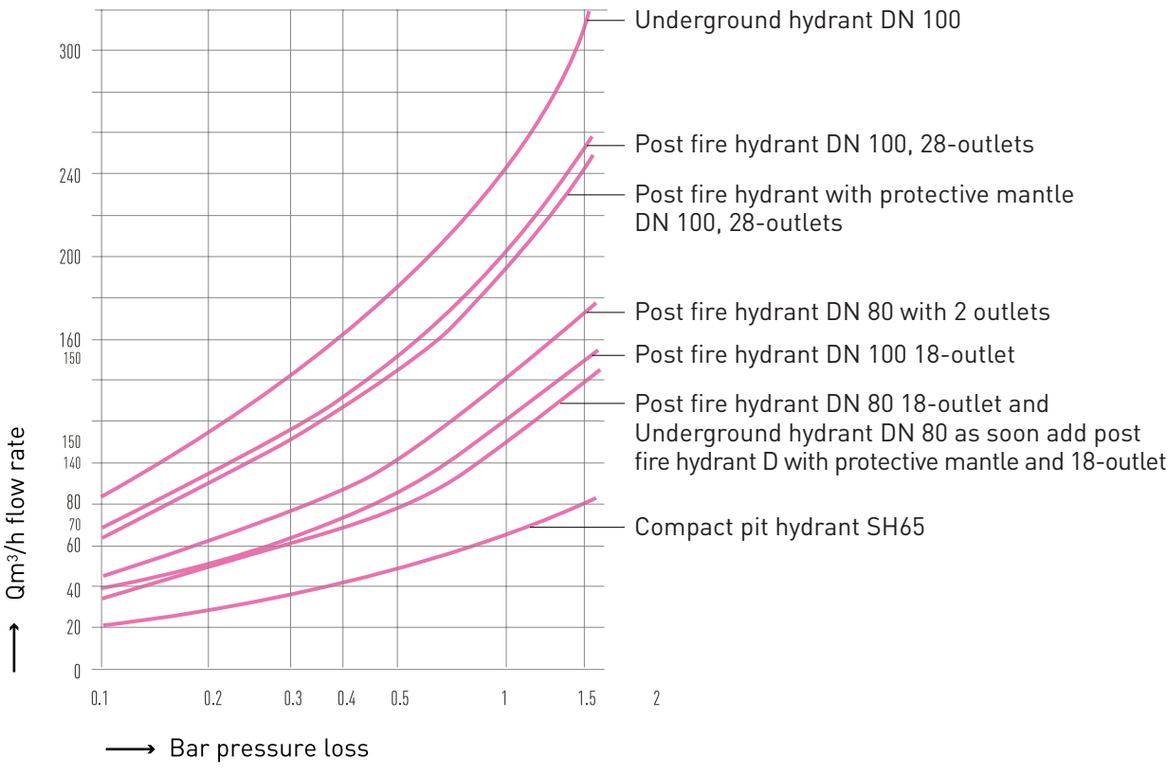

RAPHA

SERVICE VALVES

CONTROL VALVES

FDV-R-PN2 - 145

FDV-R-RN2 - 149

TALIS FP RANGE

Control Valves

Pressure Reducing Control Valve

FDV-R-PN2

The FDV-R-PN2 Pressure reducing valve is an automatic hydraulic control service valve, designed to operate in fixed fire protection system.

The FDV-R-PN2 pilot controlled hydraulic valveis activated by line pressure. The pilot valve has a spring-loaded membrane which is sensitive to downstream pressure. The pilot's spring is pre-set to a desired reduced pressure. The pilot valve maintains a constant downstream pressure by gradually opening or closing of the main valve, reducing the inlet water pressure to a pre-set desired outlet pressure. The outlet pressure is maintained constant, regardless of fluctuations in flow rate and changes in main pipeline pressure.

Designed for vertical or horizontal installation, the line pressure operated FDV-R-PN2 Pressure reducing valve features a direct elastomeric diaphragm seal, with no balancing spring or internal metallic wet components in the valve body. The hydrodynamic pattern design, ensures high flow rates with minimum head loss.

MARKETS

Marine, P.O.G., Airports, Industry, Tunnels, Storage, Residential, Commercial

TECHNICAL DATA

FLUID:
Water, Brackish water, Sea water, Foam

SIZE RANGE:
FDV-R valve (globe) - 40mm to 400mm (1½" to 16")
FDV-Ra valve (angled) – 50mm to 200mm (2" to 8")

AVAILABLE CONNECTIONS ENDS:
Flange*Flange, Groove*Groove, Thread*Thread

PRESSURE NOMINAL:
250 psi (17.2 bar)

REGULATION RATIO: 5:1

SENSITIVITY: 1.45 psi (0.1 Bar)

APPROVALS

ADVANTAGES

- Only three parts: body, diaphragm & cover plate, no wet metal spring inside the control chamber
- Low maintenance cost: the valve is serviced in-line and only one replaceable part - the long-life elastomeric diaphragm
- Conforms with inspection, Testing and Maintenance Standard of water-based Fire Protection Systems, NFPA 25
- Reduces inlet pressure to a predetermined fixed and constant outlet pressure, regardless of fluctuations or changes in main pipeline pressure and flow rate

CHARACTERISTICS

- Hydro-dynamic pattern design ensures high flowrates with minimum head loss
- Simple and reliable design
- Quick respond to downstream pressure changes
- Pressure reducing to a predetermined set of outlet pressure

Schematic drawing

Set position

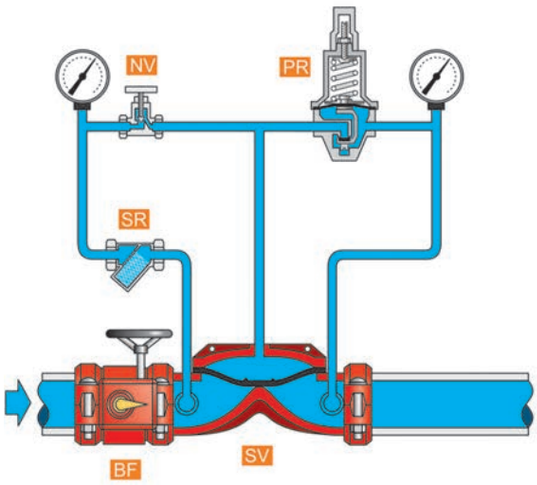

Fire position

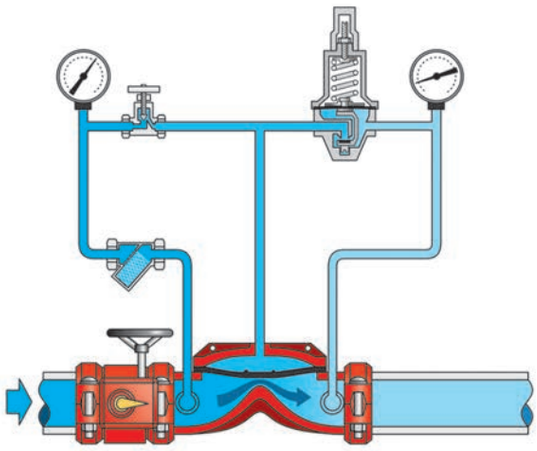

PR - PRPV – Pressure Reducing Pilot Valve
NV - Needle valve
SR - strainer
SV - FDV-R service valve
BF - Butterfly valve

SET Position:

When a fire protection system is in a SET position, there is no flow at the system's piping and the water pressure is at the FDV-R-PN2 Pilot's SET pressure.
The FDV-R-PN2 valve's control chamber is pressurized by the inlet flow, calibrated by the Needle valve **[NV]** forcing the diaphragm against its seat maintaining the valve close.

OPERATION

The FDV-R's control chamber is pressurized by a calibrated inlet flow passing through a needle valve **[NV]**, and de-pressurized by the PRPV pressure reducing pilot valve **[PR]**.
The pilot's drain flow volume is controlled by the downstream pressure passing through a sense pipe and manipulating the pilot's diaphragm and the seal mechanism.

Any change at the downstream pressure reflects the ratio between the volume of the control chamber's inlet and outlet flows. Consequently, the FDV-R valve's diaphragm position changes, maintaining the downstream at the pilot's set pressure.

FDV-R- PN2

Typical installation

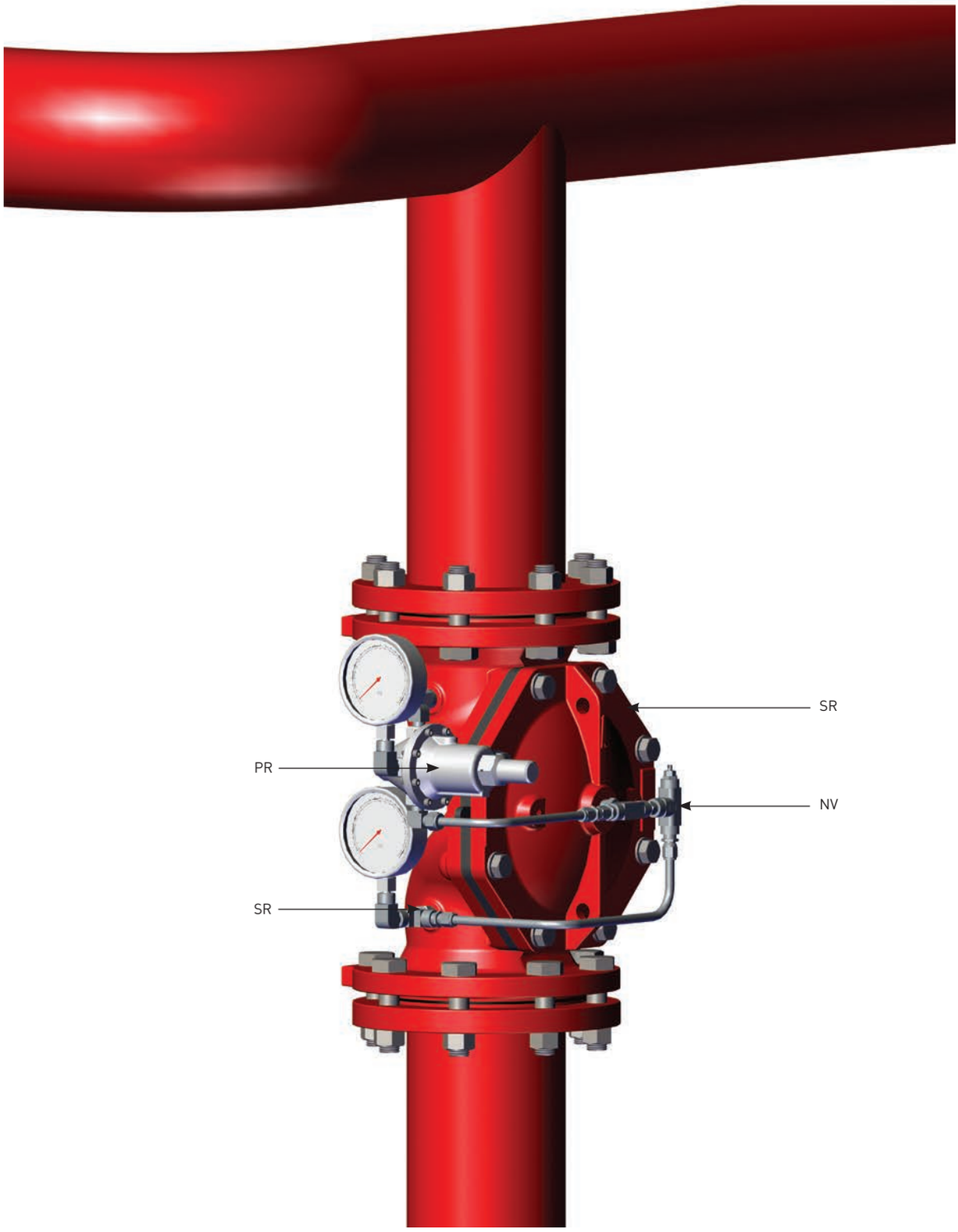

PR - PRPV – Pressure Reducing Pilot Valve

NV - Needle valve

SR - Strainer

SV - FDV-R service valve

BF - Butterfly valve

Dimensions Table

Size	1.5"-2"		3"		4"		6"		8"		10"	
	mm	Inch	mm	Inch	mm	Inch	mm	Inch	mm	Inch	mm	Inch
A	190	7.5	283	11.1	305	12	470	18.5	406	16	635	25
B	57.5	2.3	100	3.9	109	4.3	160	6.3	142	5.6	198	7.8
C	268.5	10.6	306	12	177	7	308	12.1	195	7.7	317	12.5
D	111.5	4.4	111	4.4	115	4.5	177	7	150	5.9	233	9.2
E	166	6.5	182	7.2	261	10.3	304	13.4	307	12.1	237	10.7
Kg/lb	10.4	22.9	19.3	42.5	25.6	56.4	50.2	110.7	67.6	149	109.5	241.4

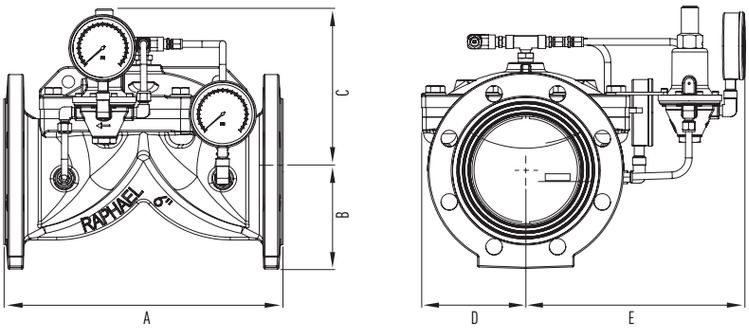

Factory Standard

MAIN VALVE:

BODY & COVER

- Ductile iron
- Cast Steel WCB
- Stainless Steel CF8
- Stainless Steel CF8M
- Nickel Aluminum Bronze

ELASTOMERS:

- NR, fabric reinforced Natural Rubber
- EPDM, fabric reinforced
- NBR, fabric reinforced Nitrile Rubber

COATING:

- Rilsan Polyamide based (Nylon 11)
- Polyester based EPC
- High built Epoxy FBE
- Vitreous Enamel (internal only)

TRIM

PIPING & TUBING:

- Stainless Steel 316
- Copper/Brass
- Cupro-Nickel
- Monel®

FITTINGS:

- Stainless Steel 316
- Brass
- Super Duplex
- Cupro-Nickel
- Monel®

ACCESSORIES:

- Brass Nickel plated
- Nickel Aluminium bronze
- Stainless steel CF8M
- Monel®
- Cupro-Nickel

PLEASE SPECIFY

- Working Media
- Ambiental conditions
- Min/Max operating flow
- Min/Max operating pressure
- Downstream set pressure
- Additional accessories needed

For more detailed technical information, please refer to chapter Engineering Data.

TALIS FP RANGE

Control Valves

Pressure Relief Control Valve

FDV-R-RN2

The FDV-R-RN2 Pressure Relief valve is an automatic hydraulic control service valve, designed to operate in fixed fire protection system, especially in fire pump units. The FDV-R-RN2 pilot controlled hydraulic valve is activated by line pressure. The pilot valve has a spring-loaded membrane which is sensitive to upstream pressure. The pilot's spring is pre-set to a desired maximum pressure. The pilot valve maintains a maximum pressure in the pipe system by quickly opening the main valve, discharging any excess pressure off the pipe system, preventing any potential damage.

Designed for vertical or horizontal installation, the line pressure operated FDV-R-RN2 Pressure Relief valve features a direct elastomeric diaphragm seal, with no balancing spring or internal metallic wet components in the valve body. The hydrodynamic pattern design, ensures high flow rates with minimum head loss.

MARKETS

Marine, P.O.G., Airports, Industry, Tunnels, Storage, Residential, Commercial

TECHNICAL DATA

FLUID:
Water, Brackish water, Sea water, Foam

SIZE RANGE:
FDV-R valve (globe) - 40mm to 400mm (1½" to 16")
FDV-Ra valve (angled) – 50mm to 200mm (2" to 8")

AVAILABLE CONNECTIONS ENDS:
Flange*Flange, Groove*Groove, Thread*Thread

PRESSURE NOMINAL:
250 psi (17.2 bar)

REGULATION RATIO: 5:1

SENSITIVITY: 1.45 psi (0.1 Bar)

APPROVALS

ADVANTAGES

- Only three parts: body, diaphragm & cover plate, no wet metal spring inside the control chamber
- Low maintenance cost: the valve is serviced in-line and only one replaceable part - the long-life elastomeric diaphragm
- Conforms with inspection, Testing and Maintenance Standard of water-based Fire Protection Systems, NFPA 25
- Maintains a constant set upstream pressuresecuring the system from over pressure

CHARACTERISTICS

- Hydro-dynamic pattern design ensures high flowrates with minimum head loss
- Simple and reliable design
- Quick respond to downstream pressure changes

Schematic drawing

Set position

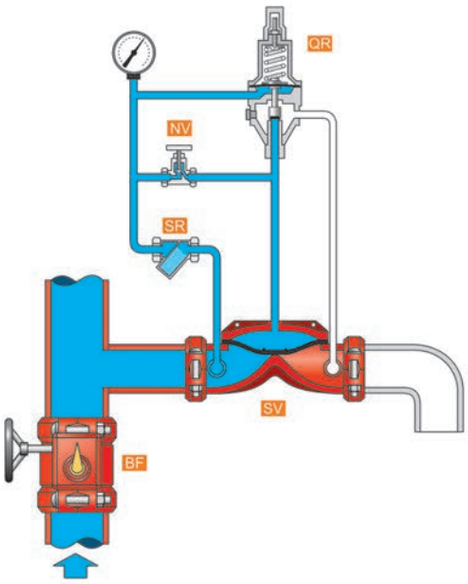

Fire position

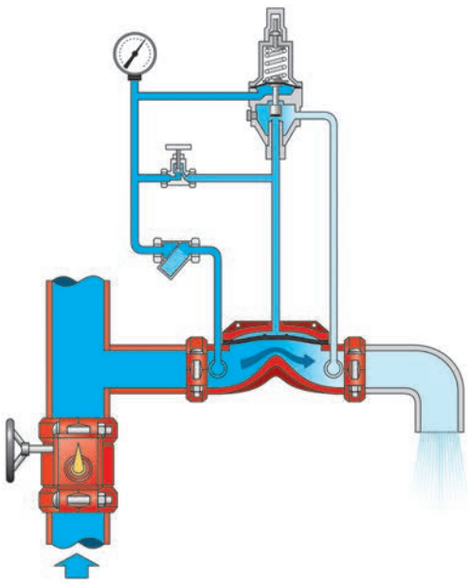

QR - QRPV – Quick Relief Pilot Valve
NV - Needle valve
SR - strainer
SV - FDV-R service valve

SET Position:

When a fire protection system is in SET position, and water pressure in the pipe system is maintained within the pre-established pressure range considered safe for operation, the FDV-R-RN2 will remain closed.
The FDV-R-RN2 valve's control chamber is pressurized by the inlet flow, pre calibrated by the Pressure Relief Pilot **[QR]** forcing the diaphragm against its seat, preventing the valve from opening.

OPERATION

When the Fire system trips open and Fire pump starts-up and pressure rises in the pipe system surpassing the preset maximum pressure, the FDV-R-RN2 will quickly open, to enable water discharge out of the pipe system to the valve's downstream.

The valve is controlled by the Pressure relief pilot. The pilot's is commanded by a hydraulic sensor port, connected to the pipe system, through the valve's upstream port. The pilot commands the valve to open, proportioning the adequate water passage necessary to maintain the system within the safe maximum required set pressure, regardless of system flow.

FDV-R- RN2

Typical installation

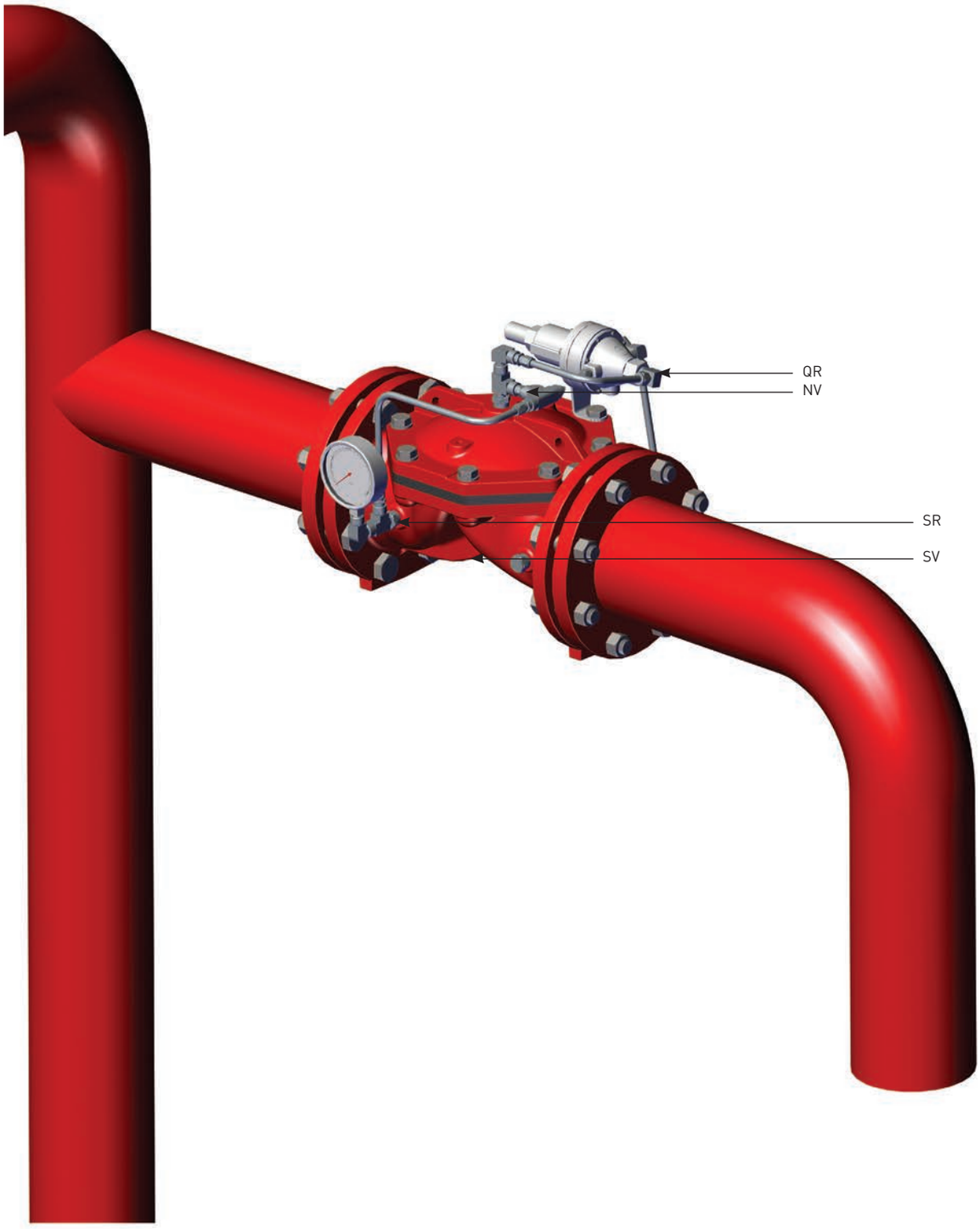

QR - QRPV – Quick Relief Pilot Valve
NV - Needle valve
SR - strainer
SV - FDV-R service valve

Dimensions Table

FDV-R-RN2 Globe

Size	2"		3"		4"		6"		8"	
	mm	Inch	mm	Inch	mm	Inch	mm	Inch	mm	Inch
A	111	4.4	198	7.8	190.6	7.5	184.2	7.3	277.5	10.9
B	176	6.9	162	6.4	176	6.9	352	13.9	245	9.6
C	146	5.7	172.6	6.8	184	7.2	137	5.4	220	8.7
D	120	4.7	154.3	6.1	178	7.0	218	8.6	226.4	8.9
E	83	3.3	116	4.6	113.8	4.5	148	5.8	171.5	6.8
F	229	9.0	208	8.2	220	8.7	253.7	10	314	12.4
Kg/lb	6.2	13.6	20.1	44.2	25.6	56.3	48.1	105.8	719	158.2

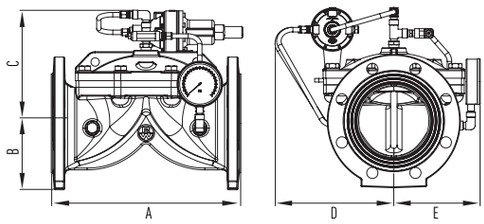

FDV-Ra-RN2 Angled

Size	1.5"- 2"		3"		4"		6"		8"	
	mm	Inch	mm	Inch	mm	Inch	mm	Inch	mm	Inch
A	190	7.5	314	12.4	336	13.2	410	16.1	470	18.5
B	82	3.2	100	3.9	109	4.3	142.5	5.6	161	6.3
C	204	8	197.2	7.8	209	8.2	241	9.5	308	12.1
D	211	8.3	163	6.4	177.6	7.0	253.4	10	250	9.8
E	166	6.5	182	7.2	202	8.0	184.2	7.3	451	17.8
Kg/lb	8.6	20	17.5	38.5	23.7	52.3	52.3	115.1	65.8	144.8

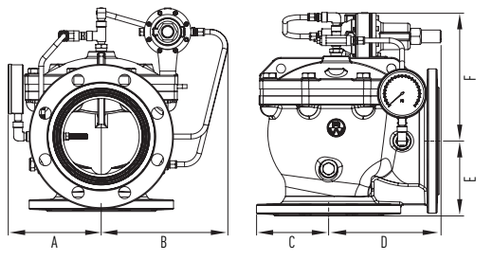

Factory Standard

MAIN VALVE:

BODY & COVER

- Ductile iron
- Cast Steel WCB
- Stainless Steel CF8
- Stainless Steel CF8M
- Nickel Aluminum Bronze

ELASTOMERS:

- NR, fabric reinforced Natural Rubber
- EPDM, fabric reinforced
- NBR, fabric reinforced Nitrile Rubber

COATING:

- Rilsan Polyamide based (Nylon 11)
- Polyester based EPC
- High built Epoxy FBE
- Vitreous Enamel (internal only)

TRIM

PIPING & TUBING:

- Stainless Steel 316
- Copper/Brass
- Cupro-Nickel
- Monel®

FITTINGS:

- Stainless Steel 316
- Brass
- Super Duplex
- Cupro-Nickel
- Monel®

ACCESSORIES:

- Brass Nickel plated
- Nickel Aluminium bronze
- Stainless steel CF8M
- Monel®
- Cupro-Nickel

PLEASE SPECIFY

- Pattern: globe or angled
- Working Media
- Ambiental conditions
- Min/Max operating flow
- Min/Max operating pressure
- Upstream set pressure
- Additional accessories needed

For more detailed technical information, please refer to chapter Engineering Data.

TAGUA
www.smart-inside.com

TAGUA

TAGUA - 155

Smart Inside

TAGUA Asset Management

TAGUA

TAGUA is a 100% web software associated with a mobil eapplication. It is dedicated to asset management for devices requiring a visit or regular maintenance.
On field, the mobil. application Smart-Inside is available for Android platform The devices managed by TAGUA are equipped with a RFID NFC chip (radio-tag). Reading this TAG allows immediate an unfalsifiable identification. Asset management solution 100% web. TAGUA allows the creation of a database of accumulated Knowledge. It can be interfaced with the master repository (GIS). The software works on a secure web platform. It provide tools to organize maintenance of equipment and create work orders. The users, through a smartphone application, gather and upload data on the cloud. NFC tags are used for the purpose of automatically identifying and tracking attached equipment. They are the key to accessing the database on site and proof that the operator has been on site.

MARKETS

Marine, P.O.G., Airports, Industry, Tunnels, Storage, Residential, Commercial

TECHNICAL DATA

ENVIRONMENT:
All Weather
20°C to + 90°C

SIZE:
40mm in diameter

AVAILABILITY:
Applied on any valve metal surface

CHIP:
Tags 13.56MHz RFID
ISO 15693 NFC-enabled

APPROVALS

ADVANTAGES

- Any valuable products that need survey / Maintenance during all its life cycle
- TIME SAVING - Identification and exact geolocation of units
- SECURE - The reading of the tag attests that the technician has been on site
  Open fail safe valve, maintained in stand-by closed position
- TOP-NOTCH SERVICE - Real-time data updating, consultation online
- RELIABLE - Unfalsifiable electronic marking device that allows the network managers to guarantee the survey of all valuable equipment in the network (and more) all their life cycle duration
- Associated to our powerful cloud web based secured platform, it provides an unequalled solution to manage the assets
- Every operation can be dealt with TAGUA / www.smart-inside.com: inventory, maintenance operation planning, functional periodical check, etc

CHARACTERISTICS

- RFID microchip with NFC antenna Asset inventory and management with up to date tools: Detailed inventory of park
- Precise location of each unit
  Planning of work orders
  Time management of the field teams
  Online data archiving
- Reading tag RFID with Android application is the key to accessing the data
  You can consult, change and manage all the location data

Schematic Flow chart

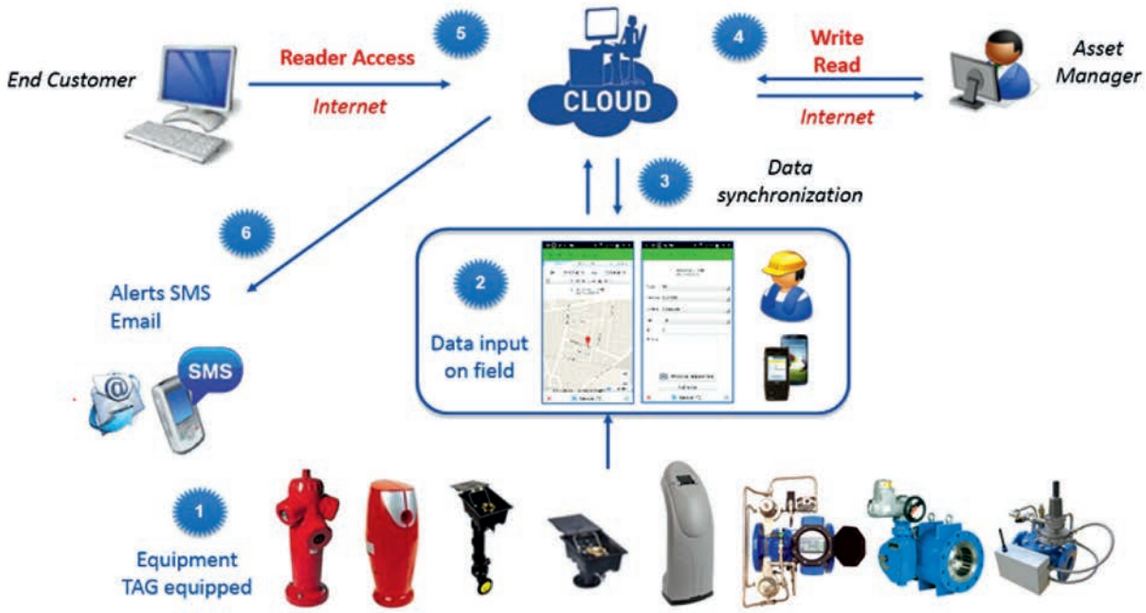

Features

Inventory of detailed and updated park

Precise location of products.
Planning of maintenance operations.
Load management of field teams.
Automatic Export updates to GIS.

Communication tools

Issuance of customized interventions reports
Manual or automatic exports.
Data transfer by e-mail and/or FTP server.

Software Features

Accessible via the web platform: www.smart-inside.com
No installation required on your computer.
Connecting using an internet browser type Explorer, Chrome, Firefox, etc...
Secure access by login and password.
Hyperfile SQL database hosted on Web Server (Cloud).

Feature required for Android App

Platform Android 4.2 or more.
Connectivity with 3G / HSDPA / 4G.
NFC RFID reader head.
GPS.
Camera.

Asset inventory and management with up to date tools:

Cloud web based solution for 24/7 data access from almost anywhere with a single.
access to the Internet Android application for NFC capable smartphones to work easily on field.
Automated exports and reports generation.
Alarms sending via SMS or e-mails in real time.
Life duration - more than several 10th of thousand reading/writing cycles.
Tag material - TPU (Thermoplastic Polyurethane).

Unfalsifiable and secured identification solution:

Tagua NFC tag is stuck on your equipment and can't be removed without destruction
Highly resistant to mechanical scratch, waterproof.

Smart-Inside.com web site:

Life cycle data sheet according to standards and regulation.
Secured access by login/password.
Complete overview of your assets.
Access can be granted to technical departments of municipalities, fire departments, etc...

TAGUA

Typical Application

Operation

TAGUA combines a detailed equipment listing at a precise geolocation with effective entire life cycle management of the equipment and an unfalsifiable NFC chip.
The manager plans operations at identified locations in its asset. These operations are then allocated to field teams called "Operators". On the field, Smartphone for the operator synchronizes daily, or on demand, with the website www.smart-inside.com. This operation updates the embedded database and sends the result of the last operations carried out by the operator. The equipment is associated with an NFC carried out by the operator. The equipment is associated with an NFC tag; the association between equipment data life cycle sheet and NFC tag is done on field, via the NFC reader of the smartphone

Asset Management

Asset management is a key element for the functioning and operation application. It consists in sheets location for defining precisely the device (brand, pattern, model, year of installation, etc ...) and locate it. The equipment pool is displayed on a map as an icon. Note that asset is common to all Bayard/Talis applications (TAGUA, CO-PERNIC, Moneca...)

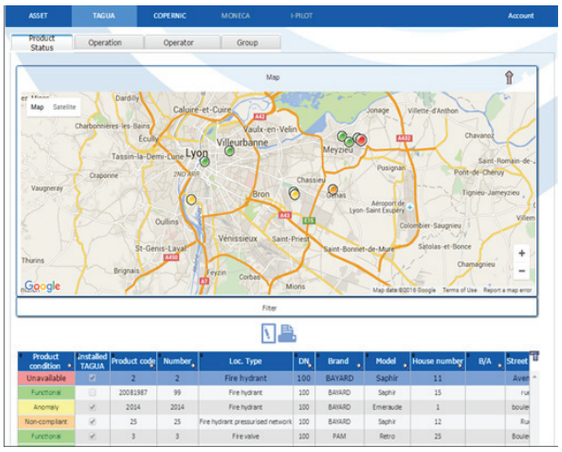

Custom report edition

TAGUA can edit, manually or automatically at user freely adjustable frequency, reports in customized format such as PDF, csv and xml.

Notifications sent by email and/or SMS

On a change of operational status, alarms are programmable to notify Status changes of an equipment.

Installation

The installation time of an NFC tag is rapid (less than 5 min). An individual kit Preparation of the bonding surface is provided with each TAGUA. Implementation exploitation NFC TAG are packaged in the form of board with 10 inseparable elements.
Once stuck on the equipment, a pull-out force over 20 kg is necessary to remove the tag (which in fact destroys it

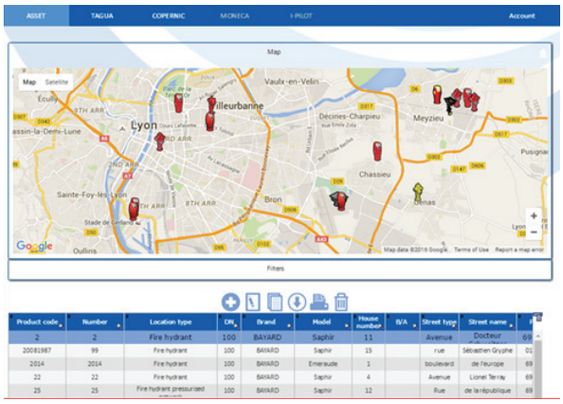

Status

This tab is the main screen of TAGUA.

Map display and tabular form of the FUNCTIONAL status of assets

colours used to display the operational status 4

On the map (Fig. 9), the product icon can also be replaced by a round .corresponding to the colour of the operational state.

TAGUA software is an open tool ready to adapt to your habits job. A choice of pre-set operations defined by the standard NFS62-200 is natively available. At all times, the user is able to change or create customized operations according to his needs.

The operations are linked to a notion of time. Thus, a task that would not be carried out in time will change colour to alert its emergency.

Reading the NFC TAG instantly retrieves in the database device location detailed data. There is no more possible identification error Traceability: Reading the NFC TAG is unfalsifiable. Each operation land is registered with the NFC TAG reading information and timestamped when NFC tag is read

Data Backup

Confidential data is automatically backed up on two different servers

via real-time replication system. By single user action, data can be exported at any time in Excel or csv format. Export is also programmable

1 Identify your assets

The field teams use mobile app for:

- Inventory.
- Identification.
- Geolocation.
- Photographs.
- NFC tag/device

2 Manage & maintain

Upload data to the server => Data are put online without retype and become available to third party users

Create maintenance routines => The field teams are informed in real-time nature of the equipment to maintain and related tasks

3 Communicate

The software communicates for you:

- automatic alerts (SMS / Email)
- Report in PDF format.
- Synchronizing data with GIS.

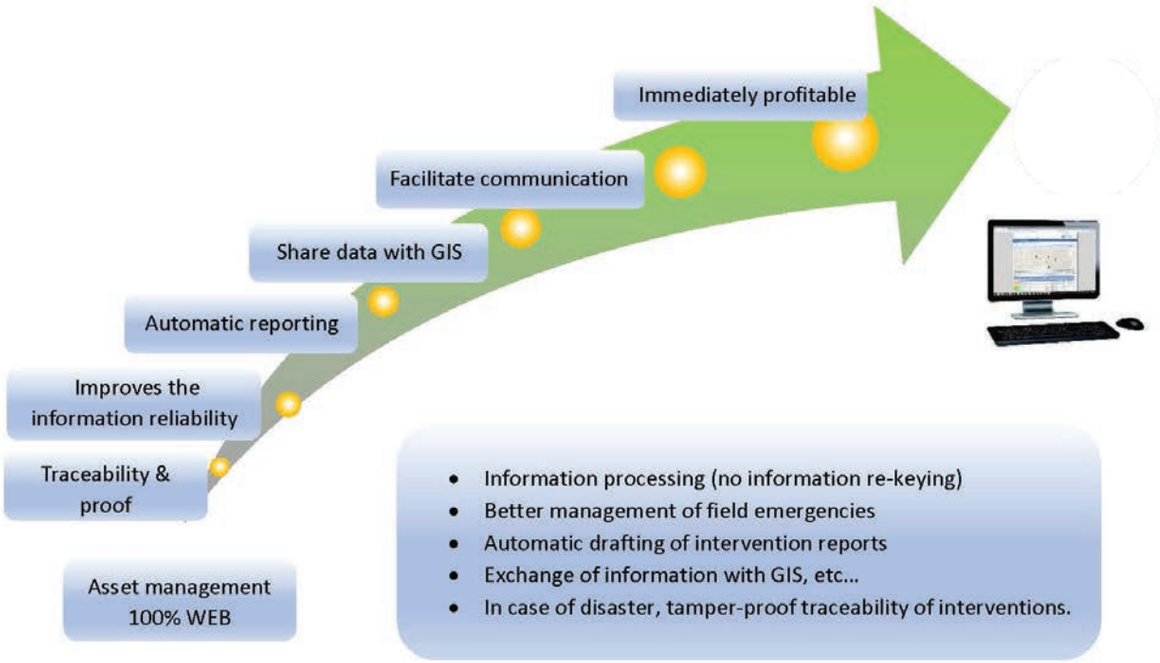

For more detailed technical information, please contact us

ENGINEERING DATA

BASIC VALVES

FDV - BASIC VALVE - 161

FDV-R BASIC VALVE -167

Engineering Data

FDV Basic Valves

Basic Valves

General Description

The FDV hydraulic control valve's solid and simple construction, in edition with its hydro-dynamically engineered inner streamlined flow passages, makes it the valve on which a large selection of fire protection application is based on.
The FDV type is a full bore globe patterned valve featuring direct elastomeric diaphragm seal with no balancing spring or inside metallic moving wet components. The valve is designed for vertical or horizontal installation. Its symmetric shape enables a revers flow without any head loss change.
A selection of cast metals, coatings, diaphragms and fasteners, enables its usage in rough environment and streaming media. The FDV valve is suitable for on-shore as well as off- shore installations and can operate with fresh water, brackish water, foam and seawater.
9 optional ports provide an easy and flexible trim piping and tubing connection.

MARKETS

Marine, P.O.G., Airports, Industry, Tunnels, Storage, Residential, Commercial

TECHNICAL DATA

FLUID:
Water, Brackish water, Sea water, Foam

SIZE RANGE:
40mm to 250mm (1½" to 10")

AVAILABLE CONNECTIONS ENDS:
Flange*Flange, Groove*Groove,
Flange*Groove, Groove*Flange, Thread*Thread

PRESSURE NOMINAL:
250 psi (17.2 bar)

APPROVALS

Advantages

- Simple and robust construction
- No inside metallic moving wet components
- 4 side, 2 bottom and 3 cover ports enable easy trim and accessories connection
- Durable material and coatings enables long lasting usage in rough conditions including off shore and seawater
- Large valve sizes and connection ends selection
- Diaphragm original design enables gradual and precise valve opening or closing
- Maintenance free between the NFPA 25 five years checks
- Stands fully in most strict fire protection design and operation demands

ON-Off Operation

The FDV is a normally open valve with a very low breaking through pressure of less than 5 psi.
When the valve's control chamber becomes pressurized, the force applied on the upper diaphragm surface, pushes it against the valves seat and holds the valve close. The diaphragm's springiness compensates for the low area/force ratio as the valve need to close although the downstream pressure nearly equalizes the upstream.
When the valve's control chamberis drained and de-pressurizes, the force applied by line pressure raises the diaphragm from its seat, pushes it into the control chamber space and drains the residual water out.
By that, water passage obstruction clears and the valves fully opens. This demonstrate a typical On-Off operation: a pressurized control chamber causes the valve to close while a drainage of this space combined with the valve's internal pressure, causes it to fully open.

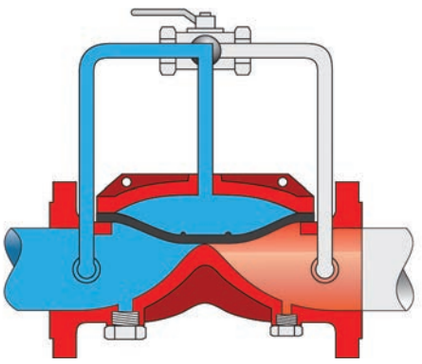

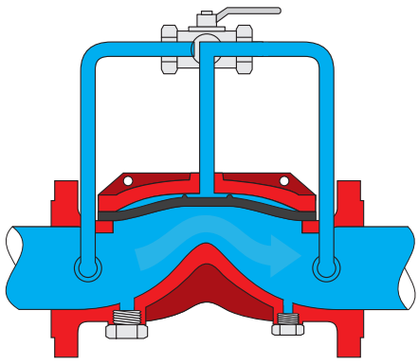

Modulating Operation

Manipulating the control chamber pressure using suitable pilot valves, enables the control of the upstream pressure, downstream pressure and valve's rate of flow.
A change in the control chamber's pressure and as a result, the chamber's water volume, will place the diaphragm at a position that would narrow or enlarge the water passage cross area. Controlled diaphragm moves can be used to regulate gradually valve's flow in regard of line pressure deviation, as demonstrated in the schema bellow.

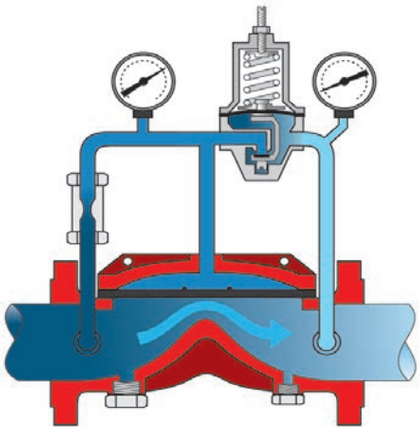

FDV

Optional pattern

Diameter / Connection	1.5" DN40	2" DN50	3" DN80	4" DN100	6" DN150	8" DN200	10" DN250
TH-TH							
GR-GR							
GR-FL							
FL-GR							
FL-FL							

Available Option

Construction Materials& Coatings

Body & Cover	
Ductile Iron	ASTM A-536
Stainless Steel	ASTM A743, CF8M
Stainless Steel	ASTM A743, CF8
Cast Steel	ASTM A-216 Grade WCB
Nickel Aluminum Bronze	ASTM B148 UNS C95800
Diaphragm	
NR	Nylon fabric reinforced natural rubber
EPDM	Nylon fabric reinforced EPDM
NBR	Nylon fabric reinforced Nitrile rubber
Fasteners	
Stainless Steel 304	ASTM F593
Stainless steel 316	ASTM F593
Galvanized steel	ASTM F2329
Nickel Alloys	Monel 400; Cupro-nickel
Coating	
Internal-Rilsan (Nylon 11)	External-Rilsan (Nylon 11)
Internal-Epoxy based Polyurethane	External-Epoxy based Polyurethane
Internal-FBE Phenolic Epoxy+Polyester	External-FBE Phenolic Epoxy+Polyester
Internal-Vitreous Enamel	External-Epoxy based Polyurethane

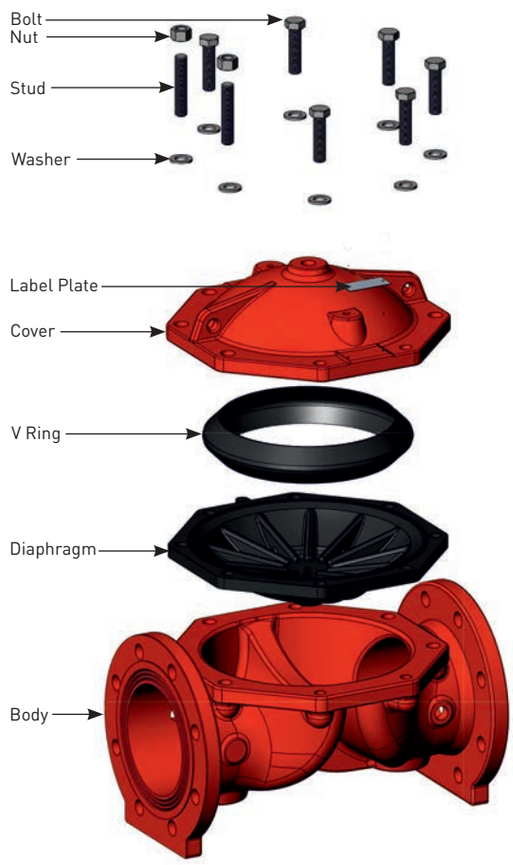

Valves Construction and Applications

	Water	Brackish Water	Sea Water	Foam
Body & Cover	Ductile Iron	Stainless Steel CF8M	Ni.Al.Br	Stainless Steel CF8
Fasteners	Galvanized Steel	Stainless Steel 316	Nickel Bronze alloys	Stainless Steel 304
Diaphragm	Natural Rubber	EPDM	EPDM	EPDM
Coating	Rilsan	Un Coated	Un Coated	Un Coated

FDV valves flow factor

NOMINAL DIAMETER		FLOW FACTOR	
INCH	MM	Kv	Cv
1.5	DN40	59	68
2	DN50	87	101
3	DN80	207	240
4	DN100	345	400
6	DN150	768	891
8	DN200	1290	1496
10"	DN250	1850	2146

Kv = Valve flow coefficient (m^3/h) / (bar)

Cv = Valve flow coefficient (gpm) / (psi)

Cv = 1.16 Kv ; Kv = 0.862 Cv

Q = Flow rate in m^3/h orgpm

Δp = Head loss across the valve in bar or psi

$Q = Kv \sqrt{\Delta p}$

Flow chart

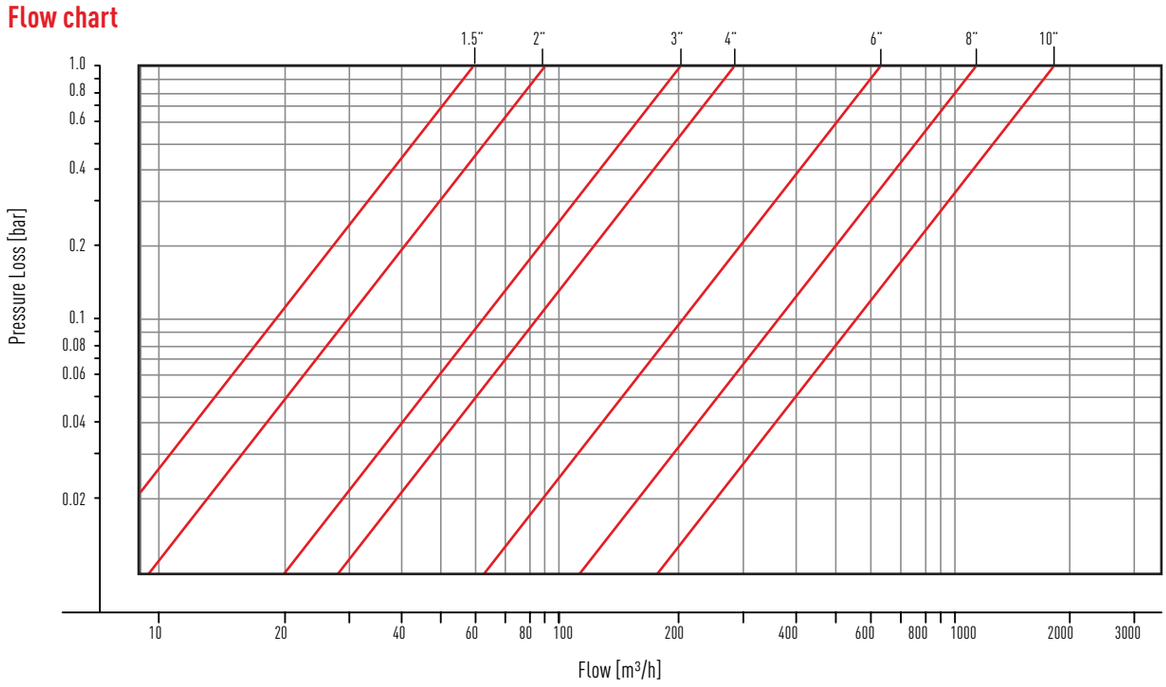

FDV

FDV FL-FL

SIZE (IN)	L	H	W	Kg (lb)
DN 50 (2")	220 (8.6)	165 (6.5)	140 (5.5)	8.9 (19.6)
DN 80 (3")	327 (12.9)	200 (7.9)	230 (9.0)	21.3 (47)
DN 100 (4")	400 (15.7)	227 (8.9)	302 (11.9)	38 (84)
DN 150 (6")	464 (18.3)	365 (14.4)	354 (13.9)	56.6 (127.7)
DN 200 (8")	570 (22.4)	416 (16.4)	466 (18.3)	96 (211.6)
DN 250 (10")	768 (30.20)	638 (25.1)	616 (24.2)	218.6 (482)

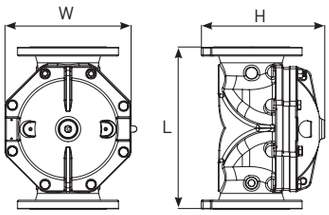

FDV FL-GR

SIZE (IN)	L	H	W	Kg (lb)
DN 80 (3")	327 (12.9)	200 (7.9)	230 (9.0)	17.6 (39)
DN 100 (4")	400 (15.7)	227 (8.9)	302 (11.9)	34.2 (75.4)
DN 150 (6")	464 (18.3)	365 (14.4)	354 (13.9)	48.8 (107.6)
DN 200 (8")	570 (22.4)	416 (16.4)	466 (18.3)	86 (189.6)

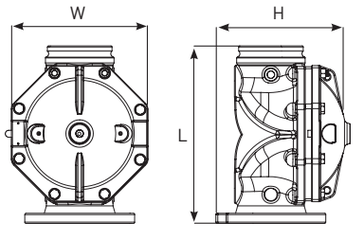

FDV GR-GR

SIZE (IN)	L	H	W	Kg (lb)
DN 40 (1.5")	205 (8.0)	97 (3.8)	127 (5.0)	2.9 (6.4)
DN 50 (2")	220 (8.7)	112 (4.4)	140 (5.5)	4.5 (9.9)
DN 80 (3")	327 (12.9)	158 (6.2)	230 (9.0)	13.3 29.3)
DN 100 (4")	400 (15.7)	212 (8.3)	302 (11.9)	27 (59.5)
DN 150 (6")	464 (18.3)	300 (11.8)	354 (13.9)	42.3 (93.6)
DN 200 (8")	570 (22.4)	364 (14.3)	466 (18.3)	75.4 (166.2

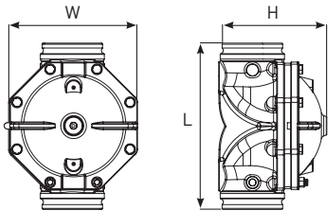

FDV TH-TH

SIZE (IN)	L	H	W	Kg (lb)
DN 40 (1.5")	204 (8.0)	94 (3.7)	125 (4.9)	2.91 (6.4)
DN 50 (2")	222 (8.7)	113 (4.4)	140 (5.5)	4.97 (11)

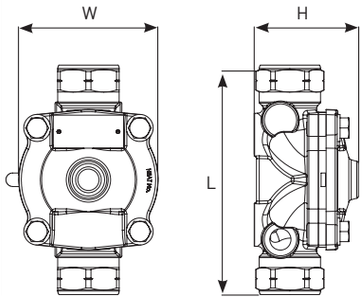

Flange Drilling Specification - Nominal Dimensions in inches & (mm)

Nominal Valve Size	ANSI B16.42 (Class 150)			ISO 7005-2 (PN 16)			ANSI B16.24 (Class 150)			ANSI B16.50 (Class 150)		
	Dim. D	Dim. d	Qty. n	Dim. D	Dim. d	Qty. n	Dim. D	Dim. d	Qty. n	Dim. D	Dim. d	Qty. n
3" (DN 80)	6.00 (152.4)	0.75 (19.0)	4	6.30 (160.0)	0.71 (18.0)	8	6.00 (152.4)	0.75 (19.0)	4	6.00 (152.4)	0.75 (19.1)	4
4" (DN 100)	7.5 (190.5)	0.75 (19.0)	8	7.5 (190.5)	0.71 (18.0)	8	7.5 (190.5)	0.75 (19.0)	8	7.5 (190.5)	0.75 (19.1)	8
6" (DN 150)	9.50 (241.3)	0.88 (22.2)	8	9.50 (241.3)	0.87 (22.0)	8	9.50 (241.3)	0.88 (22.2)	8	9.50 (241.3)	0.88 (22.4)	8
8" (DN 200)	11.75 (298.5)	0.88 (22.2)	8	11.61 (295)	0.87 (22.0)	12	11.75 (298.5)	0.88 (22.2)	8	11.75 (298.5)	0.88 (22.4)	8
10" (DN 250)	14.25 (362)	1 (25.4)	12	14 (355)	1.02 (26)	12	14.25 (362)	1	12	14.25 (362)	1 25.4	12

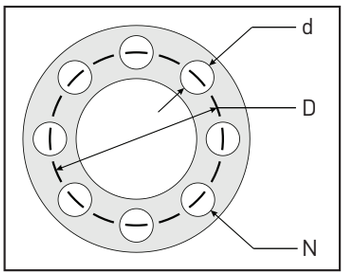

Port Sizing

Port Description	Port Size in NPT per ANSI B1.20.1						
	DN40 1.5"	DN50 2"	DN80 3"	DN100 4"	DN150 6"	DN200 8"	DN250 10"
Control Chamber Supply	½"	½"	½"	½"	½"	½"	½"
Bottom Downstream Drain	¾"	¾"	¾"	1"	1"	1"	1"
Side Port	½"	½"	½"	½"	½"	½"	½"
Bottom Upstream Drain	¾"	¾"	1¼"	2"	2"	2"	2"

Engineering Data

FDV-R Basic Valves

Basic Valves

General Description

The FDV-R type is a globe pattern valve featuring direct elastomeric diaphragm seal with no balancing spring or inside metallic moving wet components. The valve is designed for vertical or horizontal installation.
Solid and simple construction, with hydro-dynamicallyengineered inner streamlined flow passage, makes it the basic valve for large selection of fire protection applications.

A wide selection of cast metals, coatings, diaphragms and fasteners, enables its usage in harsh environment and flow media. The FDV valve is suitable for on-shore as well as off-shore installations and can operate with fresh water, brackish water, foam and seawater. 7 optional trim ports provide an easy and flexible trim piping and tubing connection.

MARKETS

Marine, P.O.G., Airports, Industry, Tunnels, Storage, Residential, Commercial

TECHNICAL DATA

FLUID:
Water, Brackish water, Sea water, Foam

SIZE RANGE:
40mm to 250mm (1½" to 10")

AVAILABLE CONNECTIONS ENDS:
Flange*Flange, Groove*Groove,
Flange*Groove, Groove*Flange, Thread*Thread

PRESSURE NOMINAL:
250 psi (17.2 bar)

APPROVALS

Advantages

- Simple and robust construction
- No inside metallic moving wet components
- 4 side, and 3 cover ports enable easy trim and accessories connection
- Durable material and coatings enables long lasting usage is rough conditions including foam, off shore and seawater
- Large valve sizes and connection ends selection
- Diaphragm original design enables gradual and precise valve opening or closing
- Maintenance free between the NFPA 25 five years checks
- Stands fully in most strictfire protection design and operation demands

ON-Off Operation

The FDV-R is a normally open valve with a very low breaking through pressure of less than 5 psi. When the valve's control chamber becomes pressurized, the force applied on the upper diaphragm surface, pushes it against the valves seat and holds the valve close. The diaphragm's springiness compensates for the low area/force ratio as the valve need to close although the downstream pressure nearly equalizes the upstream.
When the valve's control chamberis drained and de-pressurizes, the force applied by the line pressure, raises the diaphragm from its seat, pushes it into the control chamber space and drains the residual water out. By that, water passage obstruction clears and the valves fully opens. This demonstrate a typical On-Off operation: a pressurized control chamber causes the valve to close while a drainage of this space combined with the valve's internal pressure, causes it to fully open.

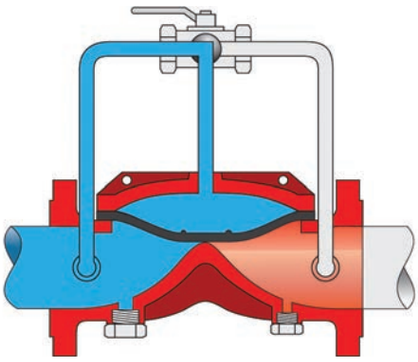

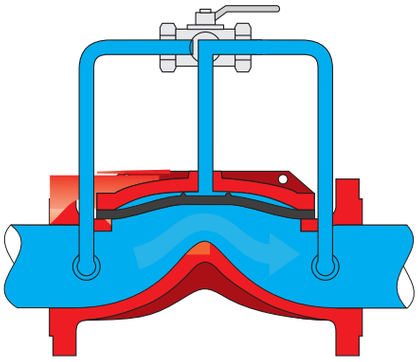

Modulating Operation

Manipulating the control chamber pressure using suitable pilot valves, enables the control of the upstream pressure, downstream pressure and valve's rate of flow.
A change in the control chamber's pressure and as a result, the chamber's water volume, will place the diaphragm at a position that would narrow or enlarge the water passage cross area. Controlled diaphragm moves can be used to regulate gradually valve's flow in regard of line pressure deviation, as demonstrated in the schema bellow.

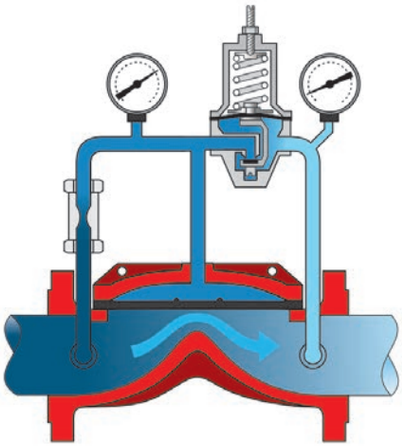

FDV-R

FDV-R optional Patterns

Valve	Dia. / End Conn.	1.5" DN40	2" DN50	2.5" DN65	3" DN80	4" DN100	6" DN150	8" DN200	10" DN250	12" DN300	14" DN350	16" DN400
FDV-R Globe	TH-TH											
	GR-GR											
	FL-FL											

Available Options

Construction Materials& Coatings

Body & Cover	
Ductile Iron	ASTM A-536
Stainless Steel	ASTM A743, CF8M
Stainless Steel	ASTM A743, CF8
Cast Steel	ASTM A-216 Grade WCB
Nickel Aluminum Bronze	ASTM B148 UNS C95800
Diaphragm	
NR	Nylon fabric reinforced natural rubber
EPDM	Nylon fabric reinforced EPDM
NBR	Nylon fabric reinforced Nitrile rubber
Fasteners	
Stainless Steel 304	ASTM F593
Stainless steel 316	ASTM F593
Galvanized steel	ASTM F2329
Nickel Alloys	Monel 400; Cupro-nickel
Coating	
Internal-Rilsan (Nylon 11)	External-Rilsan (Nylon 11)
Internal-Epoxy based Polyurethane	External-Epoxy based Polyurethane
Internal-FBE Phenolic Epoxy+Polyester	External-FBE Phenolic Epoxy+Polyester
Internal-Vitreous Enamel	External-Epoxy based Polyurethane

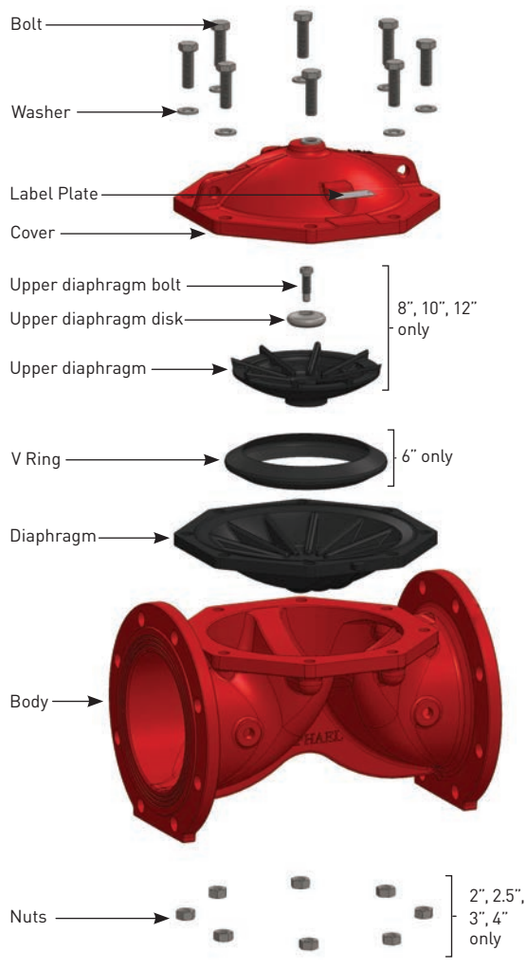

Valves Construction and Applications

FDV-R	Water	Brackish Water	Sea Water	Foam
Body & Cover	Ductile Iron	Stainless Steel CF8M	Ni.Al.Br	Stainless Steel CF8
Fasteners	Galvanized Steel	Stainless Steel 316	Nickel Bronze alloys	Stainless Steel 304
Diaphragm	Natural Rubber	EPDM	EPDM	EPDM
Coating	Rilsan	Un Coated	Un Coated	Un Coated

FDV valves flow factor

NOMINAL DIAMETER		FLOW FACTOR	
INCH	MM	Kv	Cv
1.5	DN40	40	46.4
2	DN50	70	81.2
2.5	DN65	100	116
3	DN80	170	197
4	DN100	290	336.4
6	DN150	490	568.4
8	DN200	790	916.4
10"	DN250	1400	1624
12"	DN300	1800	2088
14"	DN350	1850	2146
16"	DN400	2000	2320

Kv = Valve flow coefficient (m^3/h) / (bar)

Cv = Valve flow coefficient (gpm) / (psi)

Cv = 1.16 Kv ; Kv = 0.862 Cv

Q = Flow rate in m^3/h orgpm

Δp = Head loss across the valve in bar or psi

$Q = Kv \sqrt{\Delta p}$

Flow chart

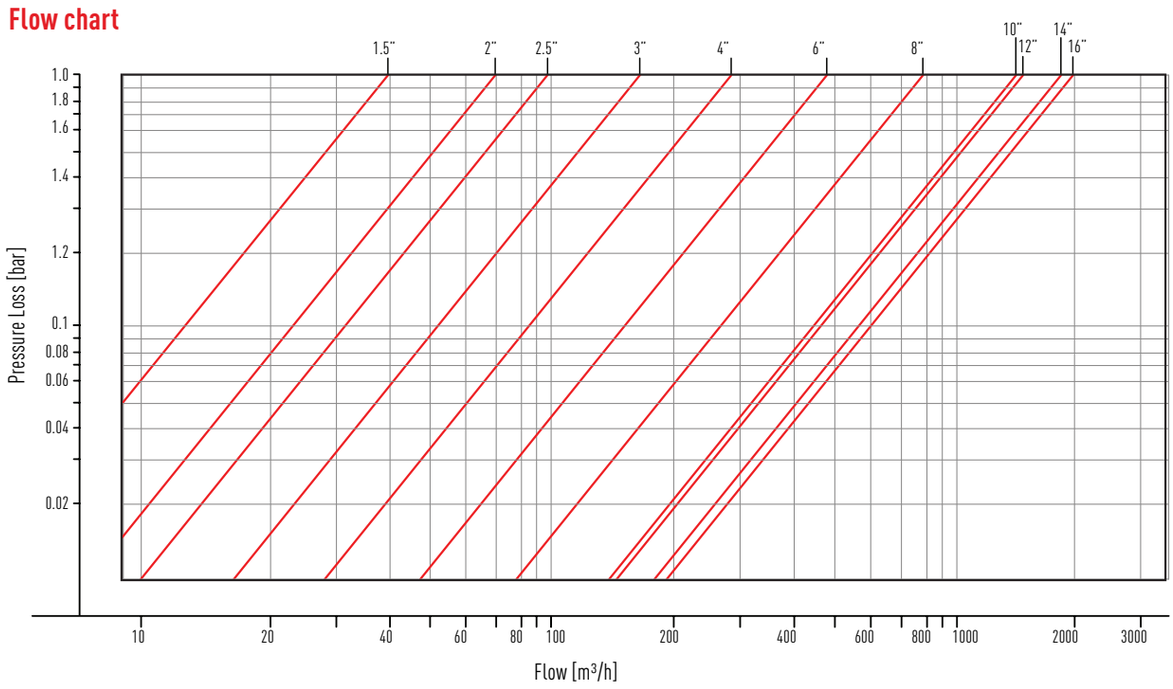

FDV-Ra

FDV-Ra optional Patterns

Valve	Dia. / End Conn.	1.5" DN40	2" DN50	2.5" DN65	3" DN80	4" DN100	6" DN150	8" DN200	10" DN250	12" DN300	14" DN350	16" DN400
FDV-Ra Angle	TH-TH											
	GR-GR											
	FL-FL											

Available Options

Construction Materials& Coatings

Body & Cover	
Ductile Iron	ASTM A-536
Stainless Steel	ASTM A743, CF8M
Stainless Steel	ASTM A743, CF8
Cast Steel	ASTM A-216 Grade WCB
Nickel Aluminum Bronze	ASTM B148 UNS C95800
Diaphragm	
NR	Nylon fabric reinforced natural rubber
EPDM	Nylon fabric reinforced EPDM
NBR	Nylon fabric reinforced Nitrile rubber
Fasteners	
Stainless Steel 304	ASTM F593
Stainless steel 316	ASTM F593
Galvanized steel	ASTM F2329
Nickel Alloys	Monel 400; Cupro-nickel
Coating	
Internal-Rilsan (Nylon 11)	External-Rilsan (Nylon 11)
Internal-Epoxy based Polyurethane	External-Epoxy based Polyurethane
Internal-FBE Phenolic Epoxy+Polyester	External-FBE Phenolic Epoxy+Polyester
Internal-Vitreous Enamel	External-Epoxy based Polyurethane

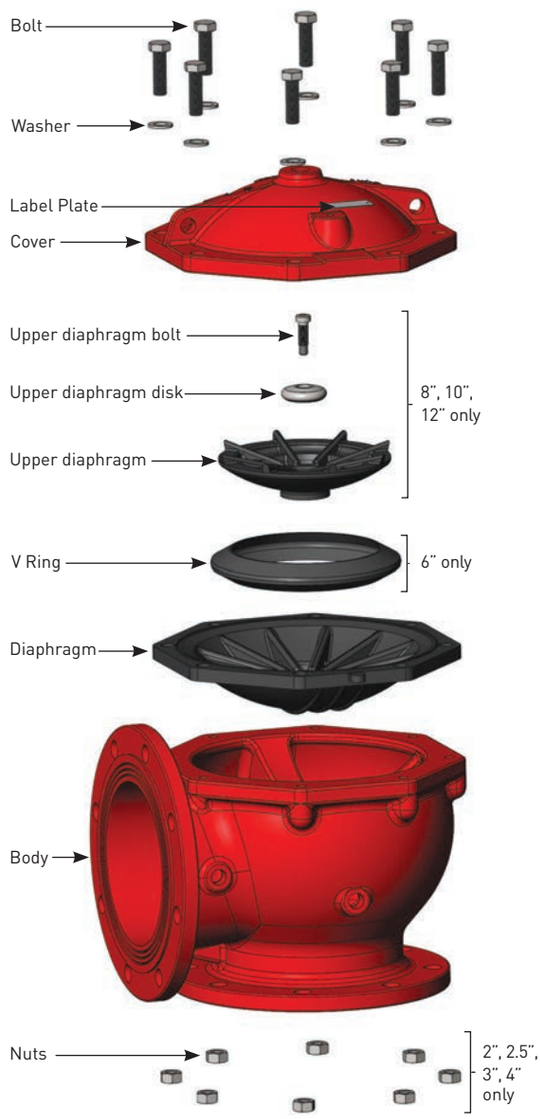

Valves Construction and Applications

FDV-Ra	Water	Brackish Water	Sea Water	Foam
Body & Cover	Ductile Iron	Stainless Steel CF8M	Ni.Al.Br	Stainless Steel CF8
Fasteners	Galvanized Steel	Stainless Steel 316	Nickel Bronze alloys	Stainless Steel 304
Diaphragm	Natural Rubber	EPDM	EPDM	EPDM
Coating	Rilsan	Un Coated	Un Coated	Un Coated

FDV-Ra Flow Factor

NOMINAL DIAMETER		FLOW FACTOR	
INCH	MM	Kv	Cv
2	DN50	62	72
2.5	DN65	90	104.4
3	DN80	155	179.8
4	DN100	200	232
6	DN150	470	545.2
8	DN200	750	870

Kv = Valve flow coefficient (m^3/h) / (bar)

Cv = Valve flow coefficient (gpm) / (psi)

Cv = 1.16 Kv ; Kv = 0.862 Cv

Q = Flow rate in m^3/h orgpm

Δp = Head loss across the valve in bar or psi

$Q = Kv \sqrt{\Delta p}$

Flow chart

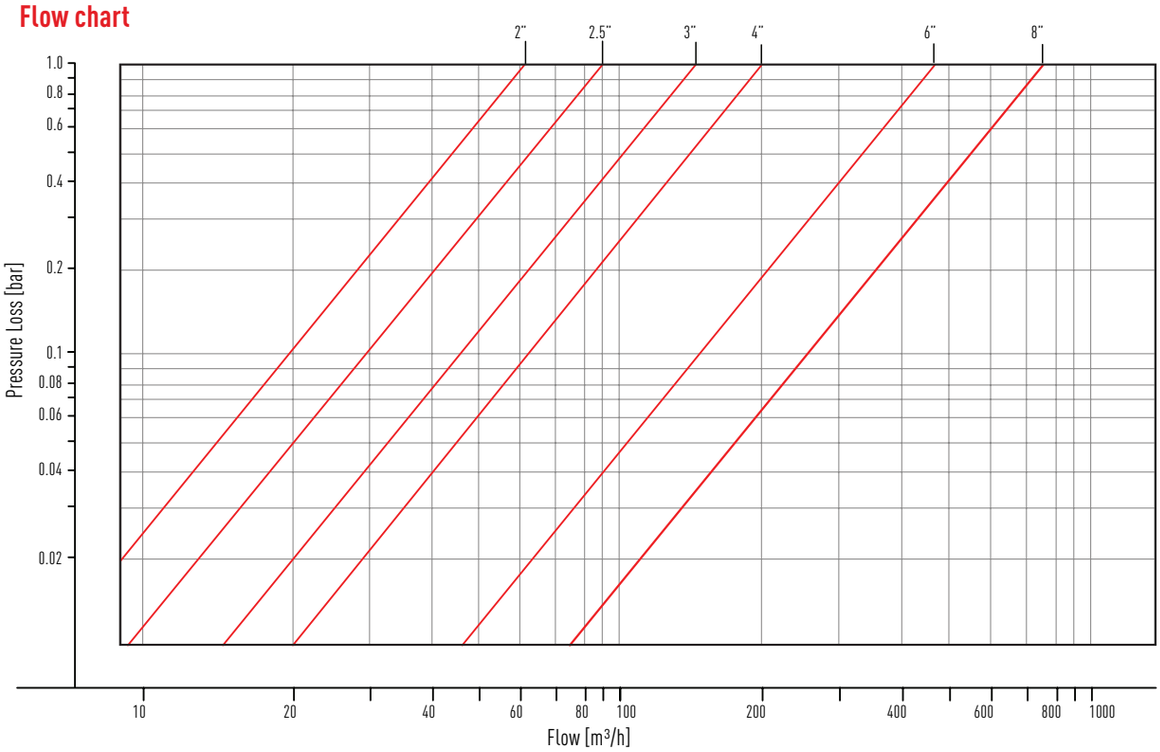

FDV-R

FDV-R FL-FL

SIZE (IN)	L	H	W	Kg (lb)
DN 50 (2")	190 (7.5)	159 (6.3)	165 (6.5)	7.9 (17.4)
DN 65 (2.5")	216 (8.5)	173 (6.8)	185 (7.3)	9.3 (20.5)
DN 80 (3")	283 (11.1)	200 (7.8)	200 (7.8)	17.5 (35.6)
DN 100 (4")	305 (12.0)	220 (8.6)	230 (9.0)	26 (57.3)
DN 150 (6")	460 (16.0)	295 (11.6)	300 (11.8)	46 (101.4)
DN 200 (8")	470 (18.5)	383 (15.0)	354 (13.9)	67.5 (148.8)
DN 250 (10")	635 (25)	430 (16.9)	464 (18.3)	111 (244.7)
DN 300 (12")	749 (29.5)	474 (18.6)	480 (18.9)	151 (332.9)
DN 350 (14")	749 (29.5)	520 (20.5)	520 (20.5)	177 (390.2)
DN 400 (16")	860 (33.9)	711 (28.0)	616 (24.2)	327 (720.9)

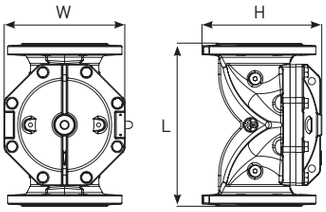

FDV-R GR-GR

SIZE (IN)	L	H	W	Kg (lb)
DN 40 (1.5")	159 (6.3)	80 (3.1)	96 (3.8)	1.5 (3.3)
DN 50 (2")	190 (7.5)	96 (3.8)	125 (4.9)	3.0 (6.6)
DN 65 (2.5")	225 (8.9)	114 (4.5)	140 (5.5)	4.7 (10.4)
DN 80 (3")	290 (11.4)	140 (5.5)	200 (7.9)	10.8 (20.3)
DN 100 (4")	346 (13.6)	173 (6.8)	230 (9.0)	18.0 (36.7)
DN 150 (6")	412 (16.2)	239 (9.4)	302 (11.9)	33 (72.7)
DN 200 (8")	470 (18.5)	350 (13.8)	354 (13.9)	51 (112.4)

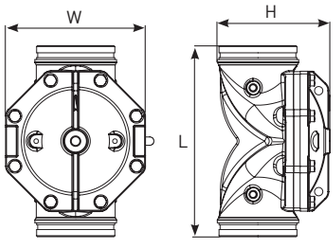

FDV-R TH-TH

SIZE (IN)	L	H	W	Kg (lb)
DN 40 (1.5")	159 (6.2)	80 (3.1)	96 (3.8)	2.0 (4.4)
DN 50 (2")	190 (7.5)	196 (7.7)	125 (4.9)	3.5 (7.7)
DN 65 (2.5")	225 (8.8)	110 (4.3)	140 (5.5)	5 (11)
DN 80 (3")	290 (11.4)	138 (5.4)	200 (7.9)	24.2 (20.3)
DN 100 (4")	346 (13.6)	220 (8.7)	230 (9.0)	16.5 (36.4)

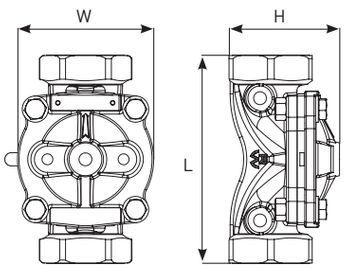

Port Description

Port Description	DN50 2"	DN65 2.5"	DN80 3"	DN100 4"	DN150 6"	DN200 8"	DN250 10"	DN300 12"	DN350 14"	DN400 16"
Diaphragm Chamber Supply	1/4"	1/4"	1/4"	1/4"	1/2"	1/2"	1/2"	1/2"	3/4"	3/4"
Upstream & Downstream side ports	1/4"	1/4"	1/4"	1/4"	1/2"	1/2"	1/2"	1/2"	1/2"	1/2"

FDV-Ra FL-FL

SIZE (IN)	L	H	W	Kg (lb)
DN 50 (2")	112 (4.4)	159 (6.2)	165 (6.5)	8.1 (17.9)
DN 65 (2.5")	122 (4.8)	160 (6.3)	185 (7.2)	11 (24.2)
DN 80 (3")	154 (6.0)	210 (8.2)	200 (7.9)	19 (41.9)
DN 100 (4")	177 (7.0)	230 (9.0)	230 (9.0)	26.5 (58.4)
DN 150 (6")	218 (8.6)	315 (12.4)	300 (11.8)	48.7 (107.4)
DN 200 (8")	225 (8.8)	400 (15.7)	354 (13.9)	62.5 (137.8)

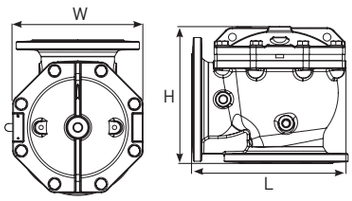

FDV-Ra GR-GR

SIZE (IN)	L	H	W	Kg (lb)
DN 50 (2")	90 (3.5)	150 (5.9)	125 (4.9)	3.0 (6.6)
DN 65 (2.5")	117 (4.6)	160 (6.3)	125 (4.9)	4.7 (10.4)
DN 80 (3")	148 (5.8)	205 (8.0)	200 (7.9)	10.8 (23.8)
DN 100 (4")	150 (5.9)	227 (8.9)	230 (9.0)	18.0 (39.7)
DN 150 (6")	206 (8.1)	317 (12.5)	300 (11.8)	33 (72.7)
DN 200 (8")	225 (8.8)	400 (15.7)	354 (13.9)	51 (112.4)

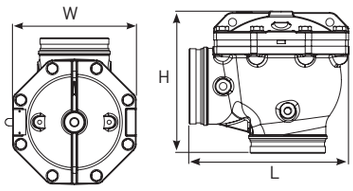

FDV-Ra TH-TH

SIZE (IN)	L	H	W	Kg (lb)
DN 50 (2")	90 (3.5)	150 (5.9)	125 (4.9)	4.2 (9.2)
DN 65 (2.5")	117 (4.6)	160 (6.3)	125 (4.9)	7 (15.4)
DN 80 (3")	148 (5.8)	205 (8.0)	200 (7.9)	12 (26.5)
DN 100 (4")	150 (5.9)	227 (8.9)	230 (9.0)	15.9 (35.0)

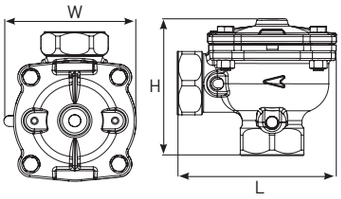

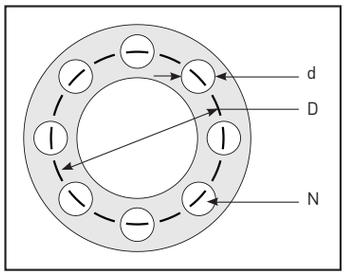

Flange Drilling Specification - Nominal Dimensions in inches & (mm)

Nominal	ANSI B16.42 (Class 150)			ISO 7005-2 (PN 16)		
Valve Size	Dim. D	Dim. d	Qty. n	Dim. D	Dim. d	Qty. n
3" (DN 80)	6.00 (152.4)	0.75 (19.0)	4	6.30 (160.0)	0.71 (18.0)	8
4" (DN 100)	7.5 (190.5)	0.75 (19.0)	8	7.5 (190.5)	0.71 (18.0)	8
6" (DN 150)	9.50 (241.3)	0.88 (22.2)	8	9.50 (241.3)	0.87 (22.0)	8
8" (DN 200)	11.75 (298.5)	0.88 (22.2)	8	11.61 (295)	0.87 (22.0)	12
10" (DN 250)	14.25 (362)	1 (25.4)	12	14 (355)	1.02 (26)	12
12" (DN 300)	17 (431.8)	1 (25.4)	12	16.14 (410)	1.02 (26)	12
14" (DN 350)	18.75 (476.3)	1.125 (28.57)	12	18.50 (470)	1.02 (26)	16
16" (DN 400)	21.25 (539.8)	1.125 (28.57)	16	20.66 (525)	1.16 (29.5)	16

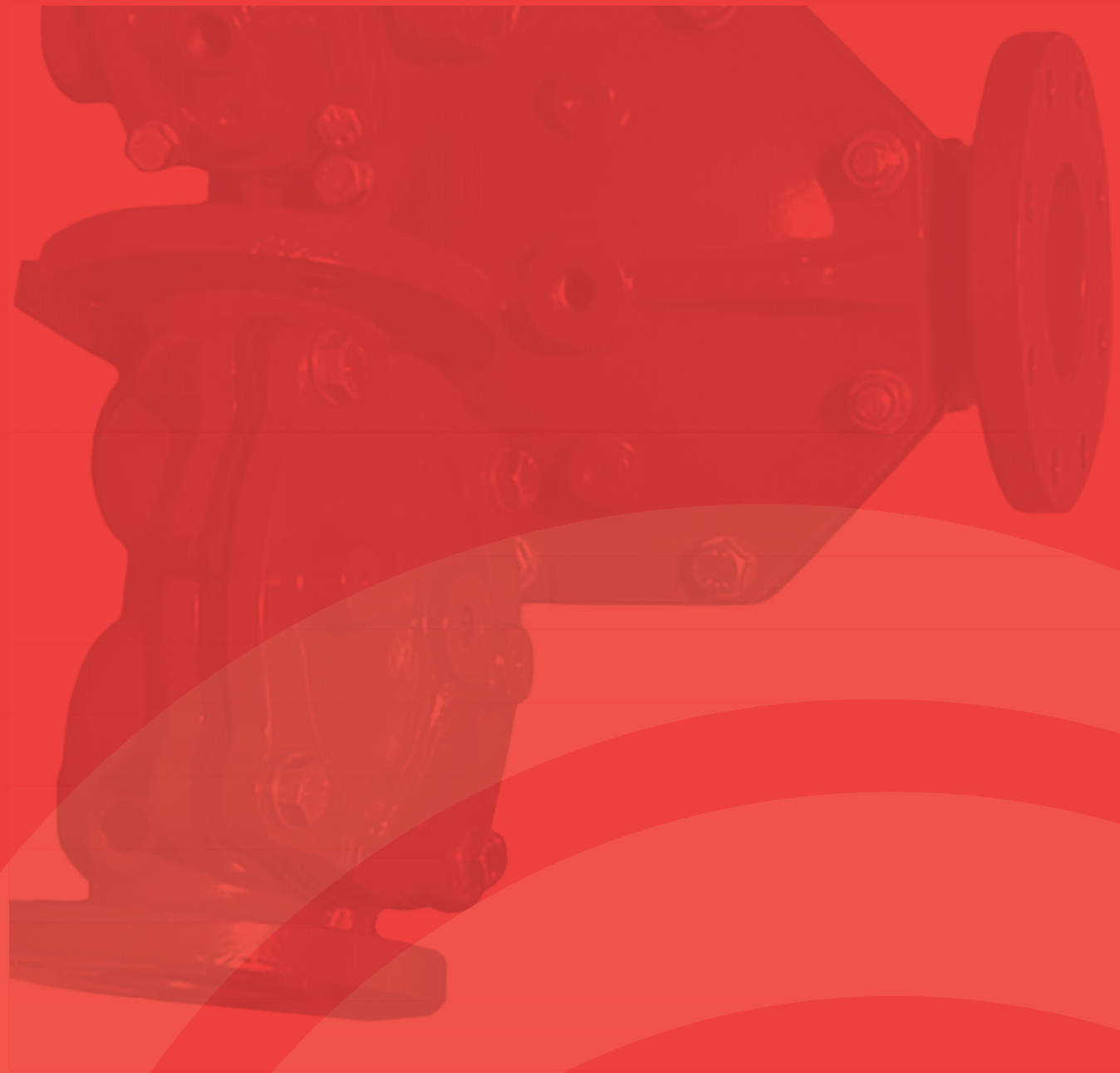

PRODUCT SELECTION GUIDE

Product Selection Guide - 177

Product Selection Guide

Deluge Systems

Application					
Type		Actuation		Reset	
Standard	D	Electric	E	Local	0
Modulating	P	Pneumatic	P	Remote	1
Basic	A	Electro pneumatic	C		
		Hydraulic	H		
		Anti Columning	A		

Main Valve											
Valve Size		Connection End		Standard		Construction material		Coating		Elastomer material	
1 1/2"	15	FL*FL	FF	ANSI #150RF	1	Ductile Iron ASTM A-536	DIC	Rilsan	RL	NR	NR
2"	02	GR*GR	GG	PN-16	2	Cast Steel ASTM A-216 Grade WCB	WCB	Polyester	PE	EPDM	DM
3"	03	FL*GR	FG	ANSI #150FF	3	Nickel Aluminum bronze ASTM B148 UNS C95800	NAB	Epoxy FBE-4+Polyester	EP	NBR	NB
4"	04	GR*FL	GF	ASTD	4	Stainless steel ASTM A743, CF8M	SS6	Epoxy + Polyurethane Enamel (int)	PU		
6"	06	TH*TH	TT	BSTD	5	Stainless steel ASTM A743, CF8	SS4	Epoxy + Polyurethane (ext)	EN		
8"	08			NPT	6						
10"	10			BSP	7						

Trim							
Accessories material		Tubing material		Fitted options		Installation orientation	
AISI 304	SS4	Copper	CUB	Pressure Switch	PS	Vertical	V
AISI 316	SS6	AISI 316	SS6	Ex-proof	EX	Horizontal	H
Brass	BRS	Monel® nickel-copper alloy 400	MON	MADV	MD		
Nickel plated Brass	BRP			Drain Valves	DR		
Nickel Aluminum bronze ASTM B148 UNS C95800	NAB			Water motor alarm	WM		
				Position indicator	PI		
				Pressure Gauge	PG		

On-Off Valves

Application

Type		Actuation		Operation		Pressure Control		Latching	
Hydraulic Hydrant	H	Electric	E	Local	0	No	0	No	0
Monitor Valve	M	Pneumatic	P	Local + Remote	1	Yes	1	Yes	1
		Hydraulic	H						

Main Valve

Valve Size		Valve Pattern		Connection End		Standard		Construction material		Coating		Elastomer material	
1 1/2"	15	Globe	G	FL*FL	FF	ANSI #150RF	1	Ductile Iron ASTM A-536	DIC	Rilsan	RL	NR	NR
2"	02	Angle	A	GR*GR	GG	PN-16	2	Cast Steel ASTM A-216 Grade WCB	WCB	Polyester	PE	EPDM	DM
3"	03			TH*TH	TT	ANSI #150FF	3	Nickel Aluminum bronze ASTM B148 UNS C95800	NAB	Epoxy FBE-4+Polyester	EP	NBR	NB
4"	04					ASTD	4	Stainless steel ASTM A743, CF8M	SS6	Epoxy + Polyurethane Enamel (int)	PU		
6"	06					BSTD	5	Stainless steel ASTM A743, CF8	SS4	Epoxy + Polyurethane (ext)	EN		
8"	08					NPT	6						
10"	10					BSP	7						
12"	12												

Trim

Accessories material		Tubing material		Fitted options		Installation orientation	
AISI 304	SS4	Copper	CUB	Pressure Switch	PS	Vertical	V
AISI 316	SS6	AISI 316	SS6	Ex-proof	EX	Horizontal	H
Brass	BRS	Monel® nickel-copper alloy 400	MON	ADV	AD		
Nickel plated Brass	BRP			Position indicator	PI		
Nickel Aluminum bronze ASTM B148 UNS C95800	NAB			Pressure Gauge	PG		

Product Selection Guide

Service Valves

Application			
Type		Pressure Set	
Pressure Reducing	PN2	PN2 Std. (7Bar)	S
Pressure Relief	RN2	RN2 Std. (Loose)	L
		Other	O

Main Valve													
Valve Size		Valve Patern		Connection End		Standard		Construction material		Coating		Elastomer material	
1 1/2"	15	Globe	G	FL*FL	FF	ANSI #150RF	1	Ductile Iron ASTM A-536	DIC	Rilsan	RL	NR	NR
2"	02	Angle	A	GR*GR	GG	PN-16	2	Cast Steel ASTM A-216 Grade WCB	WCB	Polyester	PE	EPDM	DM
3"	03			TH*TH	TT	ANSI #150FF	3	Nickel Aluminum bronze ASTM B148 UNS C95800	NAB	Epoxy FBE-4 +Polyester	EP	NBR	NB
4"	04					ASTD	4	Stainless steel ASTM A743, CF8M	SS6	Epoxy+Polyurethane	PU		
6"	06					BSTD	5	Stainless steel ASTM A743, CF8	SS4	Enamel (int) Epoxy +Polyurethane (ext)	EN		
8"	08					NPT	6						
10"	10					BSP	7						
12"	12												
14"	14												
16"	16												

Trim			
Accessories material		Tubing material	
AISI 304	SS4	Copper	CUB
AISI 316	SS6	AISI 316	SS6
Brass	BRS	Monel® nickel-copper alloy 400	MON
Nickel plated Brass	BRP		
Nickel Aluminum bronze ASTM B148 UNS C95800	NAB		

TALIS UK

The Lodge
Coleshill Manor Office Campus
South Drive
Coleshill, Birmingham
B46 1DF
United Kingdom
Phone: +44 845 077 9797
Fax: +44845 077 9798

BAYARD division international

ZI – 4 avenue Lionel Terray
BP 47

69881 Meyzieu cedex
France
United Kingdom
Phone: +33 (0)4 37 44 24 24
Fax: +33 (0)4 37 44 23 00

BELGICAST Internacional, S.L.

Bo Zabalondo 31

48100 Munguia Bizkaia
Spain
United Kingdom
Phone: +34 94 488 91 00
Fax: +34 94 488 91 30

ERHARD GmbH & Co. KG

Meeboldstr. 22

89522 Heidenheim
Germany
B46 1DF
Phone: +49-73 21 – 320-0
Fax: +49-73 21 – 320-491

Ludwig FRISCHHUT GmbH & Co. KG

Franz Stelzenberger Straße
9-17

84347 Pfarrkirchen
Germany
Phone: +49-85 61 – 3008-0
Fax: +49-85 61 – 3008-105

SCHMIEDING Armaturen GmbH

Friedrich-Ebert-Str. 58

D-59425 Unna
Germany
Phone: +49-23 03 - 93611-0
Fax: +49-23 03 - 93611-10

STRATE Technologie für Abwasser GmbH

Im Kirchenfelde 9

31157 Sarstedt
Germany
Phone: +49-50 66 – 988-0
Fax: +49-50 66 – 988-225

UNIJOINT

Rozenobel 15

5986 PA BERINGE
Netherland
Phone: +31 (0)77-3078200
Fax: +31 (0)77-3078180

DISCLAIMER

This catalog and the contained information have been collected with the utmost care and should serve for general information purposes but does not create any binding offer or contract.

The products of TALIS Management Holding and its affiliated companies ("TALIS") can only be purchased based on a separate purchase contract and the information provided in this catalog will only become part of the purchase contract if and as far as specifically agreed in writing between the contracting parties.

TALIS endeavors to keep the information in this catalog correct and up to date but expressly reserves the right to add or delete products and/or make any additions or changes to the provided information and pictures in the catalog without any notice to the users.

TALIS, however, does not bear any liability with regard to the accuracy and completeness of the information provided in this catalog and in no event will TALIS be liable to any party for any direct, indirect, special or other consequential damages for any use of this information.

TALIS

TALIS Management Holding
Postfach 1280
D-89502 Heidenheim
Meeboldstraße 22
D-89522 Heidenheim

Telefone: +49 7321 320-0
Telefax: +49 7321 320-491
info@talis-group.com
www.talis-group.com

06/2017 RP- 016E