Standards-based cylinders DDPC, integrated displacement encoder

Product range overview

Function	Type	Description
Drives	**Rodless**	
	DDLI 	• Without guide • With displacement encoder for contactless measurement • Based on linear drive DGC-K • Supply ports on end face • System product for handling and assembly technology
	DGCI 	• With guide • With displacement encoder for contactless measurement • Based on linear drive DGC • Choice of supply ports on end face or front • System product for handling and assembly technology
	With piston rod	
	DNCI 	• With displacement encoder for contactless measurement • Range of piston rod variants • Standards-based cylinder to ISO 15552
	DDPC 	• With displacement encoder for contactless measurement • Range of piston rod variants • Standards-based cylinder to ISO 15552
	DNC/DSBC 	• With attached potentiometer MLO-LWG • Range of piston rod variants • Standards-based cylinder to ISO 15552
Swivel module	**Swivel module**	
		• Based on swivel module DSM • Integrated rotary potentiometer • Compact design • Wide range of mounting options

Product range overview

Piston diameter	Stroke/swivel angle [mm/°]	Suitable for positioning with CPX-CMAX	for end-position controller CPX-CMPX	for end-position controller SPC11	for use as a measuring cylinder
Rodless					
25, 32, 40, 63	100, 160, 225, 300, 360, 450, 500, 600, 750, 850, 1000, 1250, 1500, 1750, 2000	■	■	■	■
18, 25, 32, 40, 63	100, 160, 225, 300, 360, 450, 500, 600, 750, 850, 1000, 1250, 1500, 1750, 2000	■	■	■	■
With piston rod					
32, 40, 50, 63	10 ... 2000	–	–	–	■
	100 ... 750	■	■	■	–
80, 100	10 ... 2000	–	–	–	■
	100 ... 750	■	■	■	–
32, 40, 50, 63, 80	100, 150, 225, 300, 360, 450, 600, 750	■	■	■	■
Swivel module					
25, 40, 63	270	■	■	■	■

Key features

Servo-pneumatic drive technology

Positioning and Soft Stop applications as an integral component of the valve terminal CPX – the modular peripheral system for decentralised automation tasks. The modular design means that valves, digital inputs and outputs, positioning modules and end-position controllers, as appropriate to the application, can be combined in almost any way on the CPX terminal.

Advantages:

- Pneumatics and electrics – control and positioning on one platform
- Innovative positioning technology – piston rod drives, rodless drives, rotary drives
- Control via fieldbus
- Remote maintenance, remote diagnostics, web server, SMS- and e-mail alerts are all possible via TCP/IP
- Modules can be quickly exchanged and expanded without altering the wiring

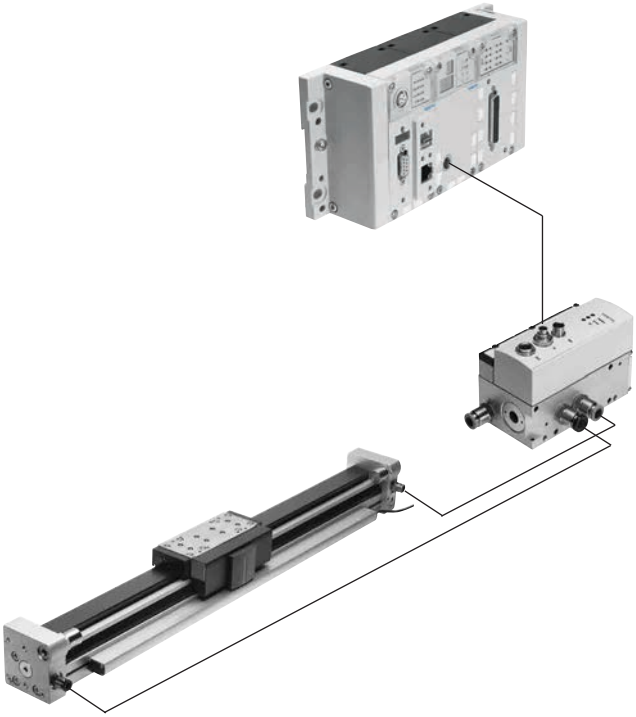

Axis controller CPX-CMAX

Free choice:
Position and force control, directly actuated or selected from one of 128 configurable position sets.
If you are looking for something more: the configurable record sequencing function enables simple functional sequences to be realised in the axis controller CPX-CMAX.
Everything is recognisable:
auto identification detects every station with its device data on the controller CPX-CMAX.

Also included:
Actuation of a brake or clamping unit via the proportional directional control valve VPWP is also part of the scope of performance of the controller CPX-CMAX.
Up to 8 modules (max. 8 axes) can be operated in parallel and independently of each other.
Commissioning via FCT (Festo configuration software) or via fieldbus:
no programming, only configuration.

Advantages:

- Greater flexibility
- OEM friendly – commissioning also via fieldbus
- Easy installation and fast commissioning
- Cost-effective
- You program the system in your PLC environment

Key features

End-position controller CPX-CMPX

Data sheets ➔ Internet: cpx-cmpx

Fast travel between the mechanical end stops of the cylinder, stopping gently and without impact in the end position.
Fast commissioning via control panel, fieldbus or handheld unit.
Improved standstill control.
Actuation of a brake or clamping unit via the proportional directional control valve VPWP is an integral part of the controller CMPX.

Depending on the fieldbus chosen, up to 9 end-position controllers can be actuated on the CPX terminal.
All system data can be read and written via the fieldbus, including, for example, the mid-positions.

Advantages:
- Greater flexibility
- OEM friendly – commissioning also via fieldbus
- Easy installation and fast commissioning
- Cost-effective
  - Up to 30% faster cycle rates
  - Significantly reduced system vibration
- Improved work ergonomics thanks to significantly reduced noise level
- The extended diagnostics help to reduce the service time of the machine

Proportional directional control valve VPWP

Data sheets ➔ Internet: vpwp

The 5/3-way proportional directional control valve for applications with Soft Stop and pneumatic positioning.
Fully digitalised – with integrated pressure sensors, with new diagnostic functions.
In sizes 4, 6, 8 and 10.
Flow rates of 350, 700, 1400 and 2000 l/min.

With switching output for controlling a brake.
Colour-coded supply ports.
Pre-assembled cables guarantee faultless and fast connection with the controllers CPX-CMPX and CPX-CMAX.

Advantages:
- Easy installation and fast commissioning
- Reduction of system downtimes thanks to the new diagnostic options
- With switching output for controlling a brake/clamping unit

Measuring module CPX-CMIX

Data sheets ➔ Internet: cpx-cmix

Fully digital data acquisition and transmission means that pneumatic cylinders can be used as sensors. With very high repetition accuracy and incorporating both analogue and digital measuring sensors.

Suitable for the linear drive DGCI with displacement encoder for measuring absolute values, for the piston rod drive DNCI/DDPC with incremental displacement encoder or alternatively for a potentiometer of type MLO.

Advantages:
- All process steps can be documented, which improves quality
- An adjustable contact force (via pressure regulator) increases the precision of the "displacement sensor"
- With displacement encoders for measuring absolute values, the actual position is immediately available after the system is switched on

Drive options

System with linear drive DDLI, DGCI

Data sheets ➔ Internet: ddli or dgci

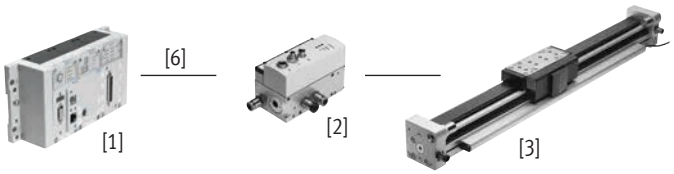

[1] Controller module CPX-CMPX or CPX-CMAX
[2] Proportional directional control valve VPWP
[3] Linear drive DDLI, DGCI with displacement encoder
[6] Connecting cable KVI-CP-3-...

- Pneumatic rodless linear drive with displacement encoder, with or without recirculating ball bearing guide
- Displacement encoder with absolute and contactless measurement
- Diameters:
  - For DGCI: 18 ... 63 mm
  - For DDLI: 25 ... 63 mm
- Stroke: 100 ... 2000 mm in fixed lengths
- Range of applications: Soft Stop and pneumatic positioning
- Loads from 1 ... 180 kg
- No sensor interface required

Advantages:
- Complete drive unit
- DDLI for easy connection to the customer's guide system
- Excellent running characteristics
- For fast and accurate positioning up to ±0.2 mm (only with axis controller CPX-CMAX)

System with standards-based cylinder DNCI, DDPC

Data sheets ➔ Internet: dnci

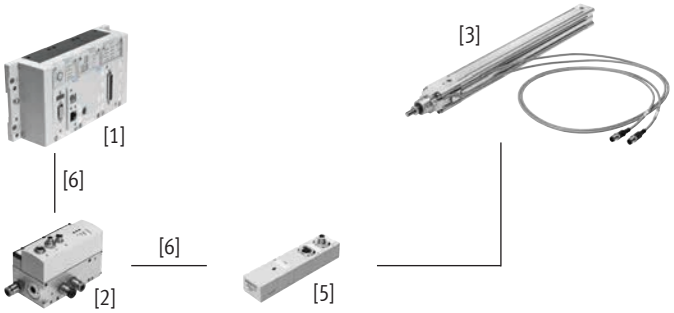

[1] Controller module CPX-CMPX or CPX-CMAX
[2] Proportional directional control valve VPWP
[3] Standards-based cylinder DNCI, DDPC with displacement encoder
[5] Sensor interface CASM-S-D3-R7
[6] Connecting cable KVI-CP-3-...

- Standards-based cylinder with integrated displacement encoder, complies with DIN ISO 6432, VDMA 24 562, NF E 49 003.1 and Uni 10 290
- Displacement encoder with contactless and incremental measurement
- Diameter: 32 ... 100 mm
- Stroke: 100 ... 750 mm
- Range of applications: Soft Stop and pneumatic positioning
- Loads from 3 ... 450 kg and the corresponding sensor interface CASM-S-D3-R7
- Pre-assembled cables guarantee faultless and fast electrical connection

Advantages:
- Compact drive unit
- Can be used universally
- Also with guide unit
- For fast and accurate positioning up to ±0.5 mm (only with axis controller CPX-CMAX)

Drive options

System with swivel module DSMI

Data sheets ➔ Internet: dsmi

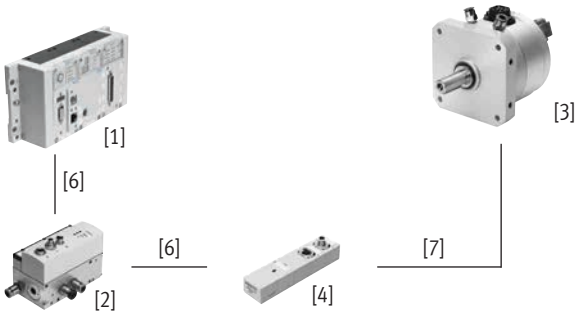

[1] Controller module CPX-CMPX or CPX-CMAX
[2] Proportional directional control valve VPWP
[3] Swivel module DSMI with displacement encoder
[4] Sensor interface CASM-S-D2-R3
[6] Connecting cable KVI-CP-3-...
[7] Connecting cable NEBC-P1W4-K-0.3-N-M12G5

- Swivel module DSMI with integrated displacement encoder
- Identical design to pneumatic swivel module DSM
- Absolute displacement encoder based on a potentiometer
- Swivel range from 0 ... 270°
- Size: 25, 40, 63
- Max. torque: 5 ... 40 Nm
- Range of applications: Soft Stop and pneumatic positioning
- Mass moments of inertia of 15 ... 6000 kgcm^2 and the corresponding sensor interface CASM-S-D2-R3
- Pre-assembled cables guarantee faultless and fast connection with the proportional directional control valve VPWP

Advantages:
- Complete drive unit, compact, can be used immediately
- High angular acceleration
- With adjustable fixed stops
- For fast and accurate positioning up to ±0.2 mm (only with axis controller CPX-CMAX)

System with potentiometer

Data sheets ➔ Internet: casm

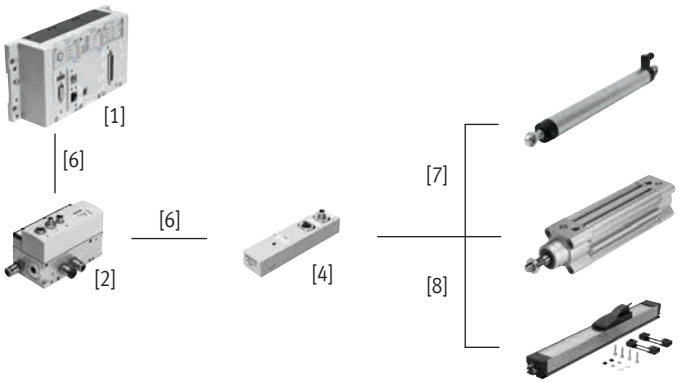

[1] Controller module CPX-CMPX or CPX-CMAX
[2] Proportional directional control valve VPWP
[4] Sensor interface CASM-S-D2-R3
[6] Connecting cable KVI-CP-3-...
[7] Connecting cable NEBC-P1W4-K-0.3-N-M12G5
[8] Connecting cable NEBC-A1W3-K-0.4-N-M12G5

- Attachable potentiometers with absolute measurement, with high degree of protection
- With connecting rod or moment compensator
- Measuring range:
  Connecting rod: 100 ... 750 mm
  Moment compensator:
  225 ... 2000 mm
- Pre-assembled cables guarantee faultless and fast connection with the sensor interface CASM
- Range of applications: Soft Stop and pneumatic positioning with cylinder diameters of 25 ... 80 mm
- Loads from 1 ... 300 kg

Advantages:
- Easy installation and fast commissioning
- Cost-effective
- Can also be used in harsh ambient conditions
- Variety of drives: CPX-CMPX and CPX-CMAX also support cylinders with external displacement encoder

Drive options

System components for Soft Stop systems with end-position controller CPX-CMPX	Linear drive	Standards-based cylinder	Swivel module	Displacement encoder		→ Page/ Internet
	DDLI/DGCI	DNCI, DDPC	DSMI	MLO-LWG/-TLF	MME-MTS	
End-position controller CPX-CMPX	■	■	■	■	■	cmpx
Proportional directional control valve VPWP	■	■	■	■	■	vpwp
Sensor interface CASM-S-D2-R3	–	–	■	■	–	casm
Sensor interface CASM-S-D3-R7	–	■	–	–	–	casm
Connecting cable KVI-CP-3-...	■	■	■	■	■	kvi
Connecting cable NEBC-P1W4-...	–	–	■	■ / –	–	nebc
Connecting cable NEBC-A1W3-...	–	–	–	– / ■	–	nebc
Connecting cable NEBP-M16W6-...	–	–	–	–	■	vpwp

System components for pneumatic positioning systems with axis controller CPX-CMAX	Linear drive	Standards-based cylinder	Swivel module	Displacement encoder		→ Page/ Internet
	DDLI/DGCI	DNCI, DDPC	DSMI	MLO-LWG/-TLF	MME-MTS	
Axis controller CPX-CMAX	■	■	■	■	■	cmax
Proportional directional control valve VPWP	■	■	■	■	■	vpwp
Sensor interface CASM-S-D2-R3	–	–	■	■	–	casm
Sensor interface CASM-S-D3-R7	–	■	–	–	–	casm
Connecting cable KVI-CP-3-...	■	■	■	■	■	kvi
Connecting cable NEBC-P1W4-...	–	–	■	■ / –	–	nebc
Connecting cable NEBC-A1W3-...	–	–	–	– / ■	–	nebc
Connecting cable NEBP-M16W6-...	–	–	–	–	■	vpwp

System components for measuring cylinders with measuring module CPX-CMIX	Linear drive	Standards-based cylinder	Swivel module	Displacement encoder		→ Page/ Internet
	DDLI/DGCI	DNCI, DDPC	DSMI	MLO-LWG/-TLF	MME-MTS	
Measuring module CPX-CMIX-M1-1	■	■	■	■	■	cmix
Sensor interface CASM-S-D2-R3	–	–	■	■	–	casm
Sensor interface CASM-S-D3-R7	–	■	–	–	–	casm
Connecting cable KVI-CP-3-...	(■)[1]	■	■	■	(■)	kvi
Connecting cable NEBC-P1W4-...	–	–	■	■ / –	–	nebc
Connecting cable NEBC-A1W3-...	–	–	–	– / ■	–	nebc
Connecting cable NEBP-M16W6-...	–	–	–	–	■	vpwp

1) As an extension

Type codes

001	Series	
DDPC	Standards-based cylinder, integrated displacement encoder	

002	Protection against rotation	
D	With guide unit	
Q	With protection against rotation	

003	Piston diameter	
80	80	
100	100	

004	Stroke	
...	10 ... 2000	

005	Clamping unit	
	None	
C	Attached	

006	Piston rod type	
	At one end	
T	Through piston rod	

007	Cushioning	
P	Elastic cushioning rings/plates on both sides	

008	Position sensing	
A	For proximity sensor	

009	Piston rod extension	
	None	
...E	1 ... 500 mm	

Peripherals overview

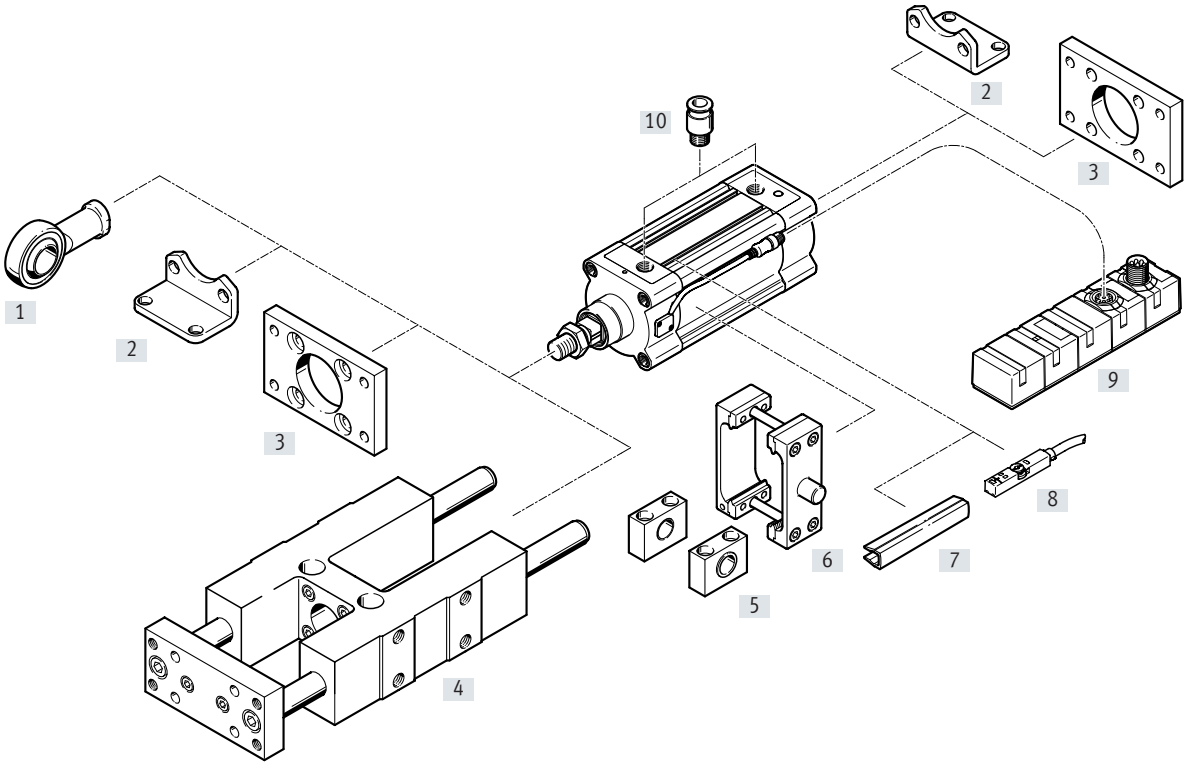

Note

If the drive DDPC is used without an end position controller CPX-CMPX, SPC11 or an axis controller CPX-CMAX, e.g. as a measuring cylinder, then the standard accessories of the drive DNC can be used.

Peripherals overview

Accessories			
	Type	Description	➔ Page/Internet
[1]	Rod eye SGS	With spherical bearing	22
[2]	Foot mounting HNC	For mounting the drive on the bearing and end caps	21
[3]	Flange mounting FNC	For mounting the drive on the bearing and end caps	21
[4]	Guide unit[1)] FENG-KF	For protecting against rotation at high torque loads	19
[5]	Trunnion support LNZG	For securing the trunnion flange kit DAMT	23
[6]	Trunnion flange kit DAMT	For swivelling movements of the drive	22
[7]	Slot cover ABP-5-S	For protection against contamination	23
[8]	Proximity sensor SME/SMT-8	For additional sensing of the piston position, can be ordered optionally, only in conjunction with the order code A in the drive's modular product section	sm
[9]	Sensor interface CASM	Used to connect pneumatic drives with analogue/incremental displacement encoder to a position controller CPX-CMAX or CPX-CMPX	casm
[10]	Push-in fitting QS	For connecting tubing with standard O.D.	qs

1) Guide unit FENG-KF must be attached to the piston rod in a way that eliminates backlash

Note

Allocation table of drives and associated proportional directional control valves

➔ page 24

Data sheet

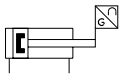

www.festo.com

- Diameter
  80 and 100 mm
- Stroke length
  10 ... 2000 mm

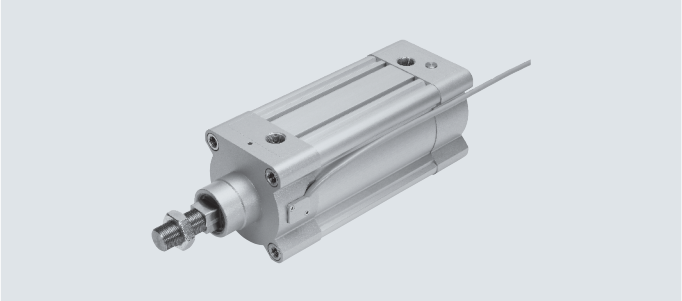

General technical data			
Piston diameter		80	100
Based on standard		ISO 15552	
Design		Piston	
		Piston rod	
		Profile barrel	
Mode of operation		Double-acting	
Guide[1]		Guide rod with yoke, with ball bearing guide	
Protection against rotation		Square piston rod	
Mounting position		Any	
Type of mounting		Via accessories	
Cushioning		Elastic cushioning rings/pads at both ends	
Position sensing		Integrated displacement encoder	
		Via proximity sensor[2]	
Measuring principle (displacement encoder)		Encoder, contactless and relative measurement	
Pneumatic connection		G3/8	G1/2
Stroke			
DDPC-...[3]	[mm]	10 ... 2000	
DDPC-...-D	[mm]	100 ... 500	
Extended piston rod	[mm]	1 ... 500	

1) Guide unit FENG-KF can be ordered via the modular product system (feature D) and is supplied attached. The maximum stroke is restricted.
2) Not included in the scope of delivery, can be ordered as an option
3) Can only be used as a positioning drive without restriction in the range from 100 ... 750 mm.
Note stroke reduction in combination with CPX-CMAX

Operating and environmental conditions		
Operating pressure	[bar]	4 ... 12
Operating pressure[1]	[bar]	4 ... 8
Operating medium[2]		Compressed air to ISO 8573-1:2010 [6:4:4]
Note on the operating/pilot medium		Operation with lubricated medium not possible Pressure dew point 10°C below ambient/medium temperature
Ambient temperature[3]	[°C]	–20 ... +80
Vibration resistance to DIN/IEC 68 Part 2-6		Severity level 2
Continuous shock resistance toDIN/IEC 68 part 2-82		Severity level 2
CE marking (see declaration of conformity)[4]		To EU EMC Directive
Corrosion resistance CRC[5]		1

1) Only applies to applications with the end position controller CPX-CMPX, SPC11 and axis controller CPX-CMAX
2) The proportional directional control valve VPWP, MPYE used requires these characteristic values
3) Note operating range of proximity sensors
4) For information about the area of use, see the EC declaration of conformity at: www.festo.com/sp → Certificates.
If the devices are subject to usage restrictions in residential, commercial or light-industrial environments, further measures for the reduction of the emitted interference may be necessary.
5) Corrosion resistance class CRC 1 to Festo standard FN 940070
Low corrosion stress. Dry indoor application or transport and storage protection. Also applies to parts behind coverings, in the non-visible interior area, and parts which are covered in the application (e.g. drive trunnions).

Data sheet

Forces [N] and impact energy [Nm]		
Piston diameter	80	100
Theoretical force at 6 bar, advancing	3016	4712
Theoretical force at 6 bar, retracting	2721	4418
Impact energy at the end positions	1.8	2.5

Permissible impact velocity: $$v = \sqrt{\frac{2 \cdot E}{m_1 + m_2}}$$

Maximum permissible mass: $$m_2 = \frac{2 \cdot E}{v^2} - m_1$$

V	Perm. impact velocity
E	Max. impact energy
m1	Moving mass (drive)
m2	Moving payload

Positioning characteristics with axis controller CPX-CMAX			
Piston diameter		80	100
Stroke	[mm]	100 … 750	
Mounting position		Any	
Resolution	[mm]	0.01	
Repetition accuracy	[mm]	≤ ±0.5	
Minimum load, horizontal	[kg]	20	32
Maximum load, horizontal	[kg]	300	450
Minimum load, vertical[1)]	[kg]	20	32
Maximum load, vertical[1)]	[kg]	100	150
Min. travel speed	[m/s]	0.05	
Max. travel speed	[m/s]	1	0.7
Typical positioning time, long stroke[2)]	[s]	0.8 8/1.02	0.9 5/1.10
Typical positioning time, short stroke[3)]	[s]	0.7 7/0.95	0.8 0/1.32
Minimum positioning stroke[4)]	[%]	≤ 3	
Stroke reduction[5)]	[mm]	15	
Recommended proportional directional control valve			
For CPX-CMAX		→ Page 24	

1) Only in combination with external guide
2) At 6 bar, horizontal mounting position, DDPC-XX-500, 400 mm positioning travel at min./max. load
3) At 6 bar, horizontal mounting position, DDPC-XX-500, 200 mm positioning travel at min./max. load
4) Based on the cylinder stroke, but not more than 10 mm
5) The stroke reduction must be maintained on each side of the drive, the max. stroke for variable positioning is thus: stroke – 2x stroke reduction

Force control characteristics with axis controller CPX-CMAX			
Piston diameter		80	100
Stroke	[mm]	100 … 750	
Mounting position		Any	
Maximum controllable force[1)]	[N]	2710/2440	4240/3975
Typical friction forces[2)]	[N]	140	160
Repetition accuracy of pressure control[3)4)]	[%]	< ±2	

1) Advancing/retracting at 6 bar
2) These values can fluctuate greatly from cylinder to cylinder and are not guaranteed.
These friction forces must also be taken into consideration when using an external guide or when the cylinder is moving other components subject to friction
3) This value defines the repetition accuracy with which the internal differential pressure in the cylinder, which corresponds to the prescribed force setpoint value, is controlled and relates to the maximum controllable force
4) The effective force at the workpiece and its accuracy depend largely on the friction in the system as well as the repetition accuracy of the internal control system. Note that friction forces always work against the direction of movement of the piston. The following formula can be used as a rule of thumb to approximate the force F at the workpiece:
$F = F_{setpoint} \pm F_{friction\ forces} \pm$ repetition accuracy of pressure control

Data sheet

Positioning characteristics with Soft Stop end position controller CPX-CMPX, SPC11			
Piston diameter		80	100
Stroke	[mm]	100 … 500	
Mounting position		Any	
Repetition accuracy[1]	[mm]	±2	
Minimum load, horizontal	[kg]	20	32
Maximum load, horizontal	[kg]	300	450
Minimum load, vertical[2]	[kg]	20	32
Maximum load, vertical[2]	[kg]	100	150
Travel time	[s]	→ Soft Stop engineering software: → www.festo.com	
Recommended proportional directional control valve			
For CPX-CMPX		→ Page 24	
For SPC11		→ Page 24	

1) One intermediate position. The accuracy in the end positions depends solely on the mechanical stability of the end stops
2) Only in combination with an external guide

Electrical data – Displacement encoder		
Output signal		Analogue
Linearity error		
Strokes up to 500 mm	[mm]	< ±0.08
Strokes up to 1000 mm	[mm]	< ±0.09
Strokes above 1000 mm	[mm]	< ±0.11
Max. travel speed	[m/s]	1.5
Degree of protection		IP65
CE marking (see declaration of conformity)		To EU EMC Directive[1]
Maximum permitted magnetic interference field[2]	[kA/m]	10
Electrical connection		Cable with 8-pin plug, round design, M12
Cable length	[m]	1.5

1) For information about the area of use, see the EC declaration of conformity at: www.festo.com/sp → Certificates.
If the devices are subject to usage restrictions in residential, commercial or light-industrial environments, further measures for the reduction of the emitted interference may be necessary.
2) At a distance of 100 mm

Pin allocation for plug

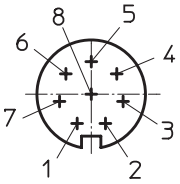

Pin	
1	+ Ub sensor
2	0 V
3	Signal sine +
4	Signal sine –
5	Signal cosine –
6	Signal cosine +
7	Shielding
8	–
Housing	Earth terminal (FE)

Data sheet

Weight [g]		
Piston diameter	80	100
DDPC-...		
Basic weight with 0 mm stroke	3053	4330
Additional weight per 10 mm stroke	87	95
Moving mass with 0 mm stroke	804	994
Additional weight per 10 mm stroke	31	31
DDPC-...-T – Through piston rod		
Basic weight with 0 mm stroke	3537	5019
Additional weight per 10 mm stroke	127	134
Moving mass with 0 mm stroke	1247	1467
Additional weight per 10 mm stroke	70	70
DDPC-...-...E – Additional weight with piston rod extension		
Additional weight per 10 mm extension	31	31
DDPC-...-C – Additional weight with clamping unit		
Additional weight	2046	2829
DDPC-...-D – Additional weight with guide unit		
Basic weight with 0 mm stroke	10430	12990
Additional weight per 10 mm stroke	80	80

Materials

Sectional view

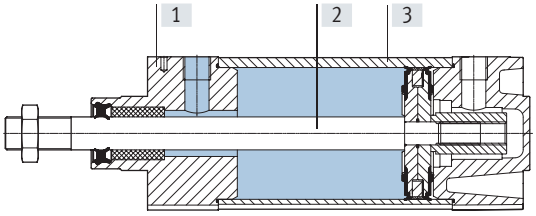

Standards-based cylinder		
[1]	Cover	Wrought aluminium alloy
[2]	Piston rod	High-alloy steel
[3]	Cylinder barrel	Wrought aluminium alloy
–	Seals	NBR, polyurethane
	Note on materials	Free of copper and PTFE
		RoHS-compliant

Data sheet

Torques and lateral forces

Max. torque for protection against rotation:
dynamic ≤ 3 Nm
static ≤ 5 Nm
An external guide unit FENG-KF is recommended with higher torque loads. The guide unit is supplied attached.
The permissible static and dynamic characteristic load values with and without attached guide
➔ Internet: feng

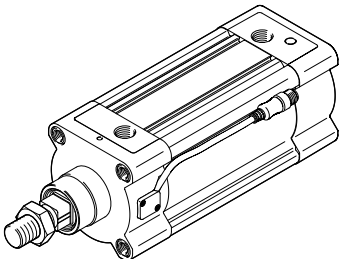

Mounting conditions

When mounting a drive A with magnet (for position sensing) next to a standard cylinder DDPC, the following conditions must be observed:

X Minimum distance between the drives
Y Offset between the drives on the bearing cap

Parallel assembly

The drives can be mounted directly next to one another if the offset Y = 0 mm.

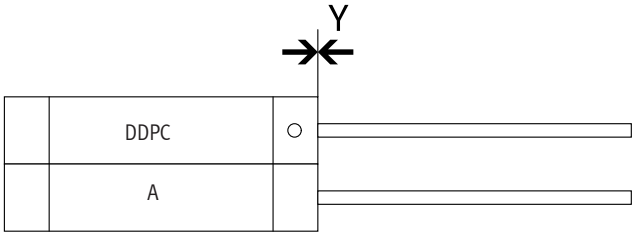

Offset mounting, cable outlet between the drives

If the offset Y › 0 mm and the cable outlet is between the drives, a distance of X › 70 mm must be observed.

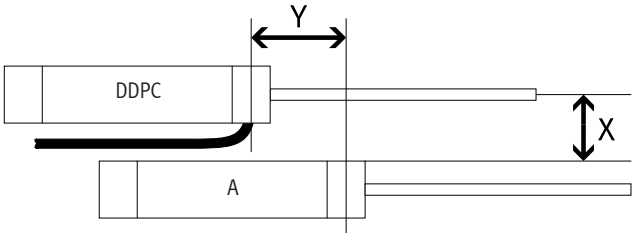

Off-set mounting, cable outlet upwards or downwards

If the offset Y › 0 mm and the cable outlet points up or down, a distance of X › 60 mm must be observed.

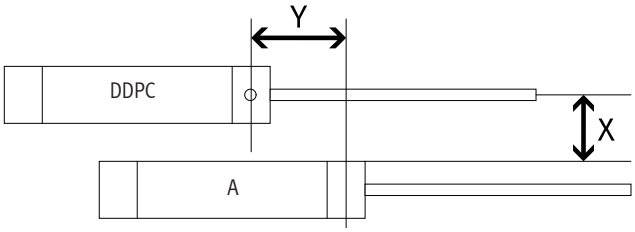

Data sheet

Dimensions Download CAD data ➔ www.festo.com

DDPC-...

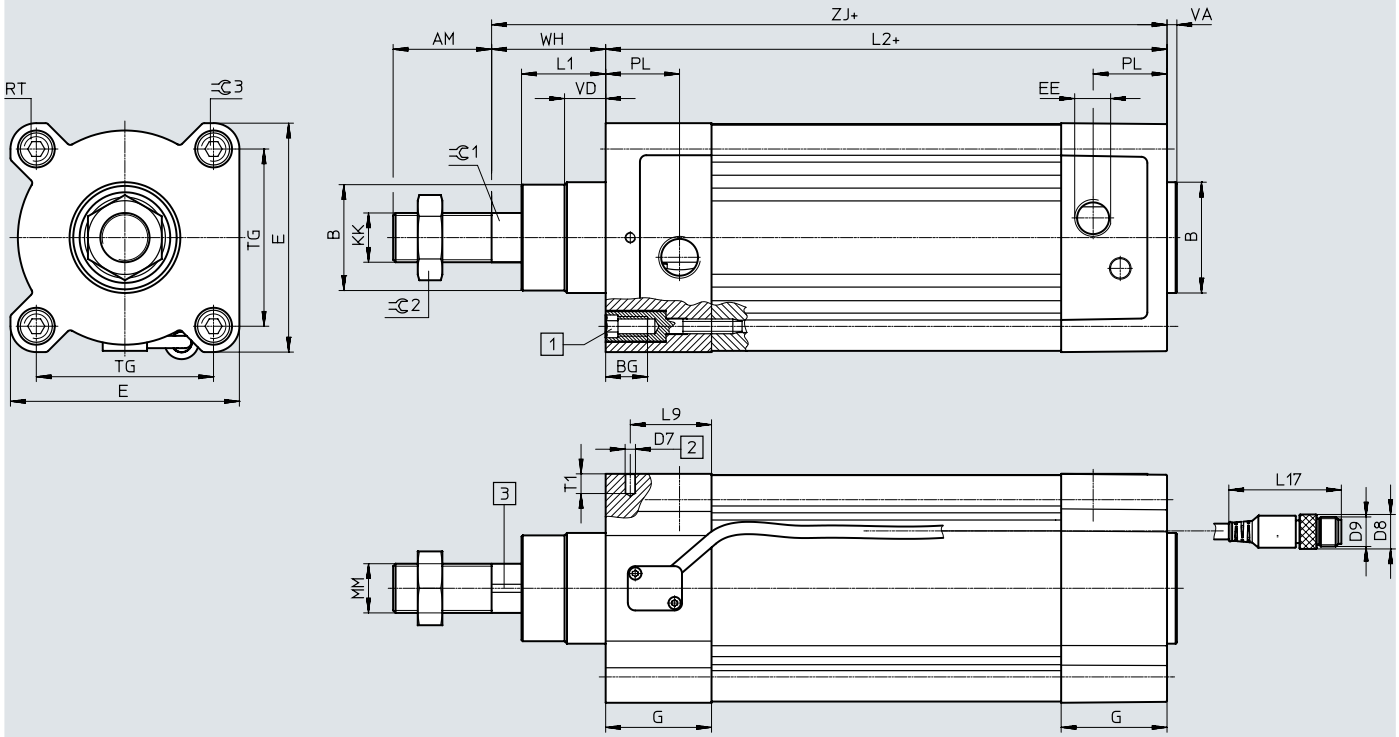

[1] Socket head screw with female thread for mounting attachments
[2] Drilled hole for securing the earthing for self-tapping M4 screw to DIN 7500
[3] Magnetic measuring band
+ = plus stroke length
++ = plus 2x stroke length

⌀ [mm]	AM	B ⌀ d11	BG	D7 ⌀	D8 ⌀	D9	E	EE	G
80	40	45	17	3.7	14	M12	93	G3/8	43
100	40	55	17	3.7	14	M12	110	G1/2	48

⌀ [mm]	KK	L1	L2	L9	L17	MM ⌀	PL	RT	T1
80	M20x1.5	34.2	128	20	45.7	20	30	M10	8
100	M20x1.5	38	138	21.5	45.7	20	31.5	M10	8

⌀ [mm]	TG	VA	VD	WH	ZJ	1	2	3
80	72	4	16.7	46	174	22	30	6
100	89	4	20.5	51	189	22	30	6

Data sheet

Dimensions Download CAD data ➔ www.festo.com

DDPC-...-T – Through piston rod

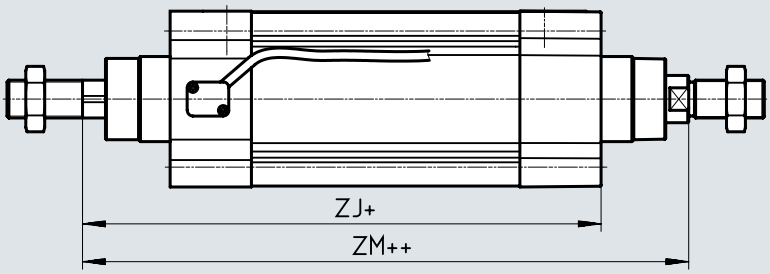

\+ = plus stroke length
++ = plus 2x stroke length

DDPC-...-CT – Through piston rod with clamping unit

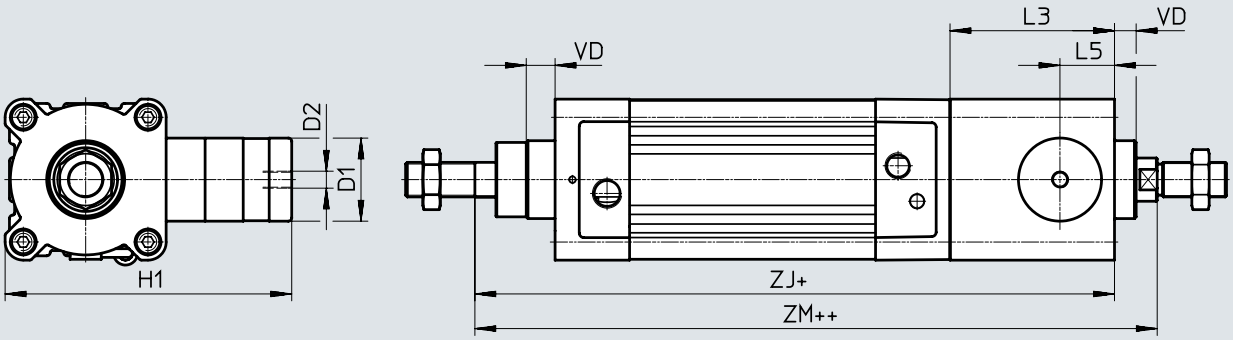

\+ = plus stroke length
++ = plus 2x stroke length

DDPC-...-...E – Extended piston rod

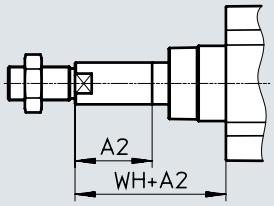

ø [mm]	A2 max.	D1 ø f9	D2	H1	L3	L5
80	500	48	G1/8	165.5	95	31.5
100	500	48	G1/8	174	98	31

ø [mm]	VD	WH	ZJ		ZM	
			DDPC-...-T	DDPC-...-CT	DDPC-...-T	DDPC-...-CT
80	16.7	46	174	269	222	317
100	20.5	51	189	287	240	338

Data sheet

Dimensions Download CAD data ➔ www.festo.com

DDPC-...-D

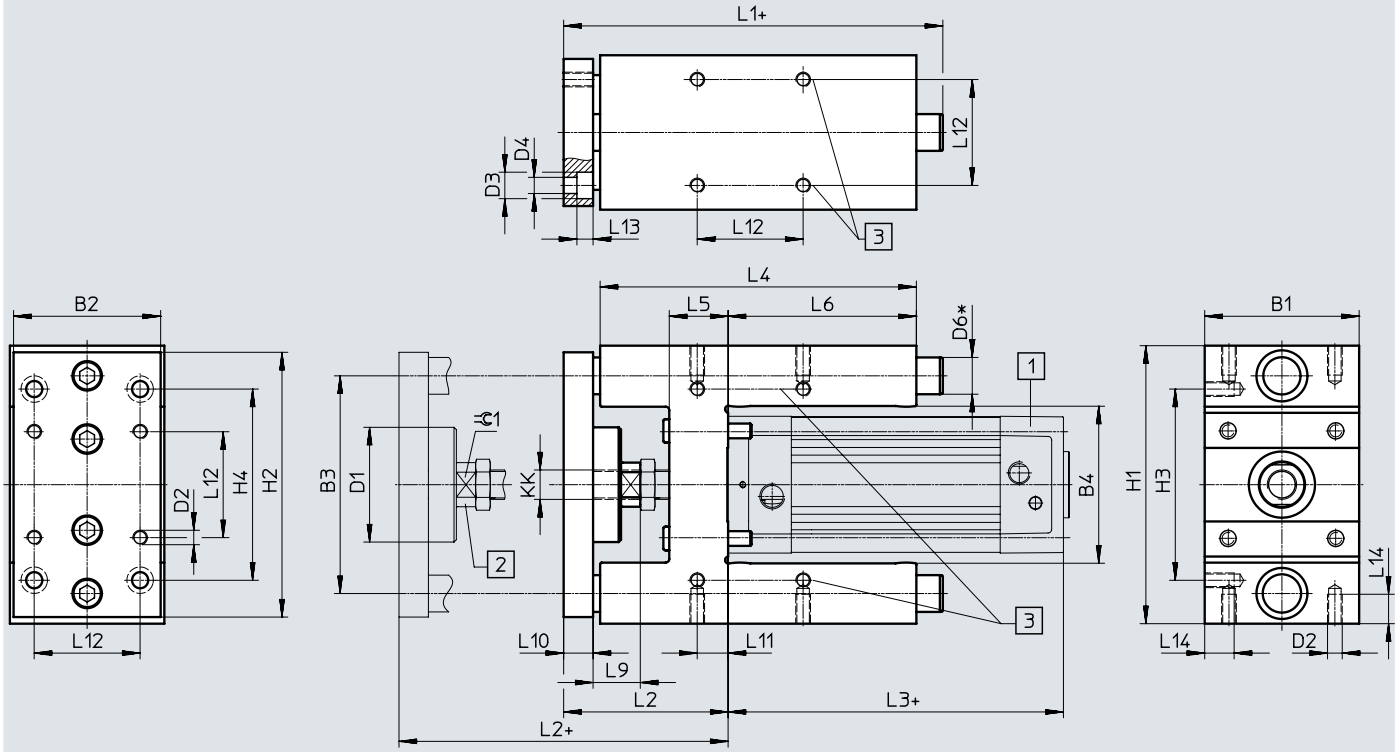

[1] Standards-based cylinder DDPC
[2] Compensating coupling
[3] Customers can drill additional mounting holes here as required
+ = plus stroke length

ø [mm]	B1 −0.3	B2	B3 ±0.2	B4 ±0.6	D1 ø	D2	D3 ø	D4 ø	D6 ø h6
80	105	100	148	106	78	M10	18	11	25
100	130	120	172	131	78	M10	18	11	25

ø [mm]	H1 −0.5	H2	H3 ±0.2	H4 ±0.2	KK	L1	L2 +10	L3	L4
80	189	180	130	130	M20x1.5	258	111	194	215
100	213	200	150	150	M20x1.5	263	116	138	220

ø [mm]	L5	L6	L9	L10	L11	L12 ±0.2	L13	L14	⌯ 1
80	40	128	32	20	21	72	11	20	27
100	40	128	32	20	24.5	89	11	20	27

Ordering data – Modular product system

Ordering table							
Piston diameter		80	100	Conditions	Code		Enter code
Module no.		**1677705**	**1691433**				
Function		Standards-based cylinder with integrated displacement encoder			**DDPC**		DDPC
Protection against rotation		With protection against rotation			**-Q**		
		With guide unit			**-D**		
Piston diameter	[mm]	80	100		**-...**		
Stroke	[mm]	10 ... 2000		[1]	**-...**		
Clamping unit		None					
		Attached		[2]	**-C**		
Piston rod		At one end					
		Through piston rod			**T**		
Cushioning		Elastic cushioning rings/pads at both ends			**-P**		-P
Stroke	[mm]	10 ... 2000		[1]	**-...**		
Stroke	[mm]	10 ... 2000			**-...**		
Position sensing		Via proximity sensor			**A**		A
Piston rod extension		None					
	[mm]	1 ... 500			**-...E**		

[1] Stroke Can only be used as a positioning drive without restriction in the range from 100 ... 500 mm.
[1] –... Can only be used as a positioning drive without restriction in the range from 100 ... 750 mm
[2] C Only available with T

Accessories

Foot mounting HNC

Material:
Galvanised steel
Free of copper and PTFE

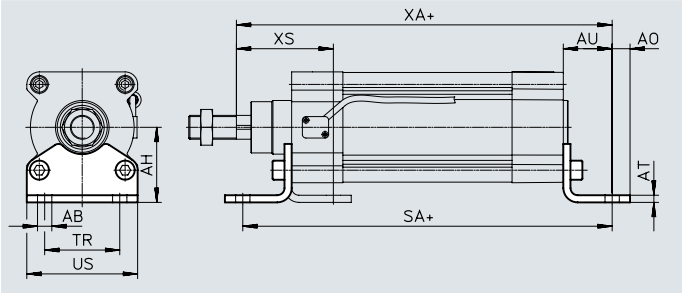

+ = plus stroke length

Dimensions and ordering data

For ⌀ [mm]	AB ⌀	AH	AO	AT	AU	SA DDPC-...	SA DDPC-...-C
80	12	63	15	6	41	276	371
100	14.5	71	17.5	6	41	220	318

For ⌀ [mm]	TR	US	XA DDPC-...	XA DDPC-...-C	XS	CRC[1]	Weight [g]	Part no.	Type
80	63	93	281	376	81	2	829	**174373**	**HNC-80**
100	75	110	230	328	86	2	1009	**174374**	**HNC-100**

1) Corrosion resistance class CRC 2 to Festo standard FN 940070
Moderate corrosion stress. Indoor applications in which condensation can occur. External visible parts with primarily decorative surface requirements which are in direct contact with a normal industrial environment.

Flange mounting FNC

Material:
FNC: Galvanised steel
Free of copper and PTFE
RoHS-compliant

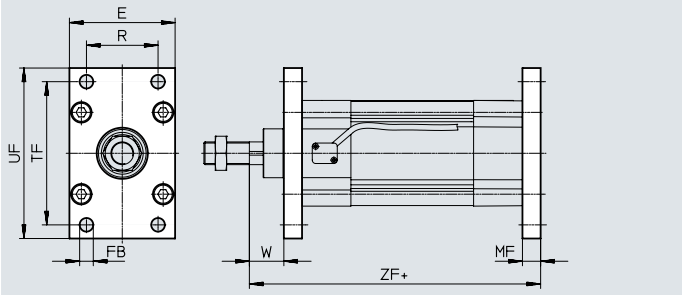

+ = plus stroke length

Dimensions and ordering data

For ⌀ [mm]	E	FB ⌀ H13	MF	R	TF	UF	W	ZF DDPC-...	ZF DDPC-...-C	CRC[1]	Weight [g]	Part no.	Type
80	93	12	16	63	126	150	30	256	351	1	1495	**174380**	**FNC-80**
100	110	14	16	75	150	175	35	205	303	1	2041	**174381**	**FNC-100**

1) Corrosion resistance class CRC 1 to Festo standard FN 940070
Low corrosion stress. Dry indoor application or transport and storage protection. Also applies to parts behind coverings, in the non-visible interior area, and parts which are covered in the application (e.g. drive trunnions).

Accessories

Rod eye SGS

Scope of delivery:
1 rod eye, 1 hex nut to DIN 439

Material:
Galvanised steel
RoHS-compliant

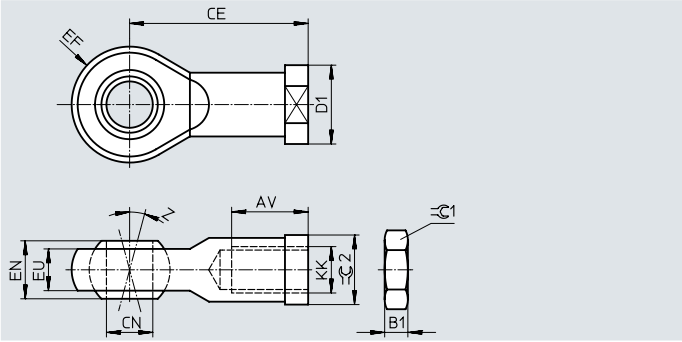

Dimensions and ordering data

For Ø [mm]	AV	B1	CE	CN Ø H7	D1 Ø	EF ±0.5	EN	EU	Z [°]	C1	C2	CRC[1) 2)]	Weight [g]	Part no.	Type
M20x1.5	33 –2	10	77	20	34	25	25	18	15	30	30	1	464	**9264**	**SGS-M20x1.5**

1) Corrosion resistance class CRC 1 to Festo standard FN 940070
Low corrosion stress. Dry indoor application or transport and storage protection. Also applies to parts behind coverings, in the non-visible interior area, and parts which are covered in the application (e.g. drive trunnions).
2) In the area of the ball classified as:
Corrosion resistance class CRC 0 to Festo standard FN 940070
No corrosion stress. Applies to small, visually unimportant standard parts such as threaded pins, circlips and clamping sleeves which are usually only available on the market in a phosphated or burnished version (and possibly oiled) as well as to ball bearings (for components < CRC 3) and plain bearings.

Trunnion flange kit DAMT

The kit can be attached at any position along the profile barrel of the cylinder.

Material:
Galvanised steel
Free of copper and PTFE
RoHS-compliant

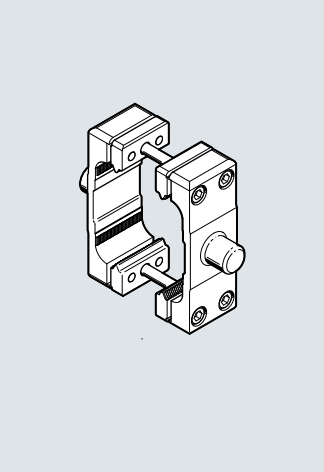

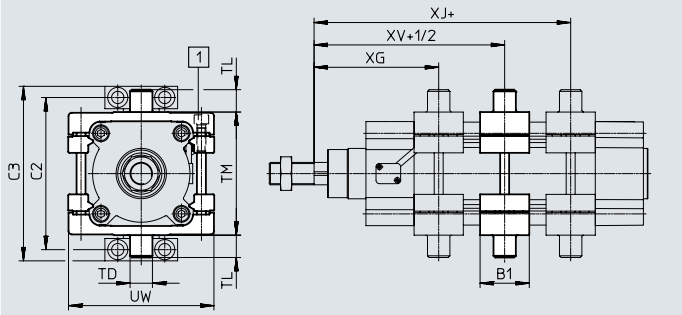

\+ = plus stroke length
+½ = plus half stroke length
[1] Max. tightening torque

Dimensions and ordering data

For Ø [mm]	B1	C2	C3	TD Ø e9	TL	TM	UW	XG DDPC-...	XG DDPC-...-C
80	44	136	156	20	20	110	130	111	206
100	48	164	189	25	25	132	145	123	221

For Ø [mm]	XJ DDPC-...	XJ DDPC-...-C	XV DDPC-...	XV DDPC-...-C	Max. tightening torque [Nm]	CRC[1)]	Weight [g]	Part no.	Type
80	175	270	143	238	28+2	1	1494	**163529**	**DAMT-V1-80-A**
100	117	215	120	218	28+2	1	2095	**163530**	**DAMT-V1-100-A**

1) Corrosion resistance class CRC 1 to Festo standard FN 940070
Low corrosion stress. Dry indoor application or transport and storage protection. Also applies to parts behind coverings, in the non-visible interior area, and parts which are covered in the application (e.g. drive trunnions).

Accessories

Trunnion support LNZG

Material:
Trunnion support: Anodised aluminium
Plain bearing: Plastic
Free of copper and PTFE
RoHS-compliant

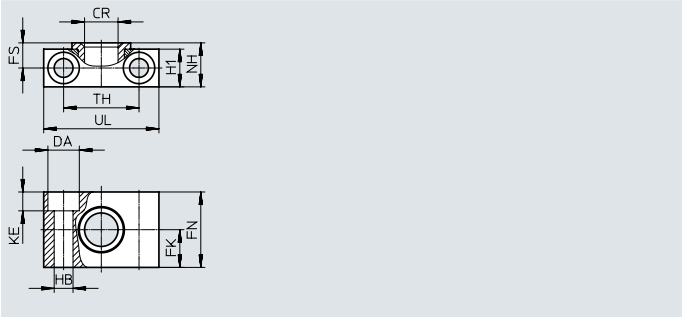

Dimensions and ordering data

For Ø [mm]	CR Ø D11	DA Ø H13	FK Ø ±0.1	FN	FS	H1	HB Ø H13	KE	NH	TH ±0.2	UL	CRC[1]	Weight [g]	Part no.	Type
80	20	18	20	40	13	20	11	11	23	42	65	2	178	**32961**	**LNZG-63/80**
100	25	20	25	50	16	24.5	14	13	28.5	50	75	2	306	**32962**	**LNZG-100/125**

1) Corrosion resistance class 2 to Festo standard 940070
Components subject to moderate corrosion stress. External visible parts with primarily decorative surface requirements which are in direct contact with a normal industrial environment or media such as coolants or lubricating agents.

Ordering data

	For Ø	Comment	Part no.	Type	PU[1]
Slot cover				Data sheets ➔ Internet: abp	
	80, 100	Each 0.5 m	**151680**	**ABP-5-S**	2

1) Packaging unit

Note
Recommended proximity sensor
➔ Internet: dsbc

Accessories

Ordering data – Proportional directional control valves and push-in fittings

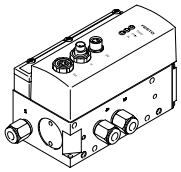

For Ø [mm]	Stroke [mm]	Proportional directional control valve, Data sheets → Internet: vpwp, Part no.	Type	Push-in fitting for DDPC, Data sheets → Internet: qs, Part no.	Type	PU[1]
For applications with axis controller CPX-CMAX						
80	100 … 200	**550171**	**VPWP-6-L-5-Q8-10-E-…**	**186100**	**QS-G3/8-8**	10
	201 … 450	**550172**	**VPWP-8-L-5-Q10-10-E-…**	**186102**	**QS-G3/8-10**	
	451 … 750	**1552544**	**VPWP-10-L-5-Q-10-E-G-EX1**	**186103**	**QS-G3/8-12**	
100	100 … 120	**550171**	**VPWP-6-L-5-Q8-10-E-…**	**186104**	**QS-G1/2-12[2]**	1
	121 … 330	**550172**	**VPWP-8-L-5-Q10-10-E-…**	**186104**	**QS-G1/2-12[3]**	
	331 … 750	**1552544**	**VPWP-10-L-5-Q-10-E-G-EX1**	**186104**	**QS-G1/2-12**	

1) Packaging unit
2) With additional reduction from Ø 12 to Ø 8, with push-in connector QS-12H-8 (part number 130624)
3) With additional reduction from Ø 12 to Ø 10, with push-in connector QS-12H-10 (part number 153044)

Ordering data – Proportional directional control valves and push-in fittings

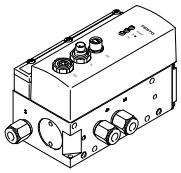

For Ø [mm]	Stroke [mm]	Proportional directional control valve, Data sheets → Internet: vpwp, Part no.	Type	Push-in fitting for DDPC, Data sheets → Internet: qs, Part no.	Type	PU[1]
For applications with Soft Stop end position controller CPX-CMPX						
80	100 … 125	**550170**	**VPWP-4-L-5-Q8-10-E-…**	**186100**	**QS-G3/8-8**	10
	126 … 160	**550171**	**VPWP-6-L-5-Q8-10-E-…**	**186100**	**QS-G3/8-8**	
	161 … 400	**550172**	**VPWP-8-L-5-Q10-10-E-…**	**186102**	**QS-G3/8-10**	
	401 … 500	**1552544**	**VPWP-10-L-5-Q-10-E-G-EX1**	**186103**	**QS-G3/8-12**	
100	100 … 150	**550171**	**VPWP-6-L-5-Q8-10-E-…**	**186104**	**QS-G1/2-12[2]**	1
	151 … 350	**550172**	**VPWP-8-L-5-Q10-10-E-…**	**186104**	**QS-G1/2-12[3]**	
	351 … 500	**1552544**	**VPWP-10-L-5-Q-10-E-G-EX1**	**186104**	**QS-G1/2-12**	

1) Packaging unit
2) With additional reduction from Ø 12 to Ø 8, with push-in connector QS-12H-8 (part number 130624)
3) With additional reduction from Ø 12 to Ø 10, with push-in connector QS-12H-10 (part number 153044)

Ordering data – Proportional directional control valves and push-in fittings

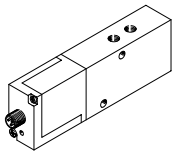

For Ø [mm]	Stroke [mm]	Proportional directional control valve, Data sheets → Internet: mpye, Part no.	Type	Push-in fitting for DDPC, Data sheets → Internet: qs, Part no.	Type	PU[1]
For applications with Soft Stop end position controller SPC11						
80	100 … 125	**151692**	**MPYE-5-1/8-LF-010-B**	**186100**	**QS-G3/8-8**	10
	126 … 160	**151693**	**MPYE-5-1/8-HF-010-B**	**186100**	**QS-G3/8-8**	
	161 … 400	**151694**	**MPYE-5-1/4-010-B**	**186102**	**QS-G3/8-10**	
	401 … 500	**151695**	**MPYE-5-3/8-010-B**	**186103**	**QS-G3/8-12**	
100	100 … 150	**151693**	**MPYE-5-1/8-HF-010-B**	**186104**	**QS-G1/2-12[2]**	1
	151 … 350	**151694**	**MPYE-5-1/4-010-B**	**186104**	**QS-G1/2-12[3]**	
	351 … 500	**151695**	**MPYE-5-3/8-010-B**	**186104**	**QS-G1/2-12**	

1) Packaging unit
2) With additional reduction from Ø 12 to Ø 8, with push-in connector QS-12H-8 (part number 130624)
3) With additional reduction from Ø 12 to Ø 10, with push-in connector QS-12H-10 (part number 153044)

Festo - Your Partner in Automation

1 Festo Inc.

5300 Explorer Drive
Mississauga, ON L4W 5G4
Canada

Festo Customer Interaction Center
Tel: 1 877 463 3786
Fax: 1 877 393 3786
Email: customer.service.ca@festo.com

2 Festo Pneumatic

Av. Ceylán 3,
Col. Tequesquináhuac
54020 Tlalnepantla,
Estado de México

Multinational Contact Center
01 800 337 8669

ventas.mexico@festo.com

3 Festo Corporation

1377 Motor Parkway
Suite 310
Islandia, NY 11749

4 Regional Service Center

7777 Columbia Road
Mason, OH 45040

Festo Customer Interaction Center
1 800 993 3786
1 800 963 3786
customer.service.us@festo.com

Connect with us

www.festo.com/socialmedia

www.festo.com

Subject to change