Double offset metal seat high performance butterfly valves to suit API standards 150 Lb Rating

Tom Disco®

302A Wafer

303Q Lugged

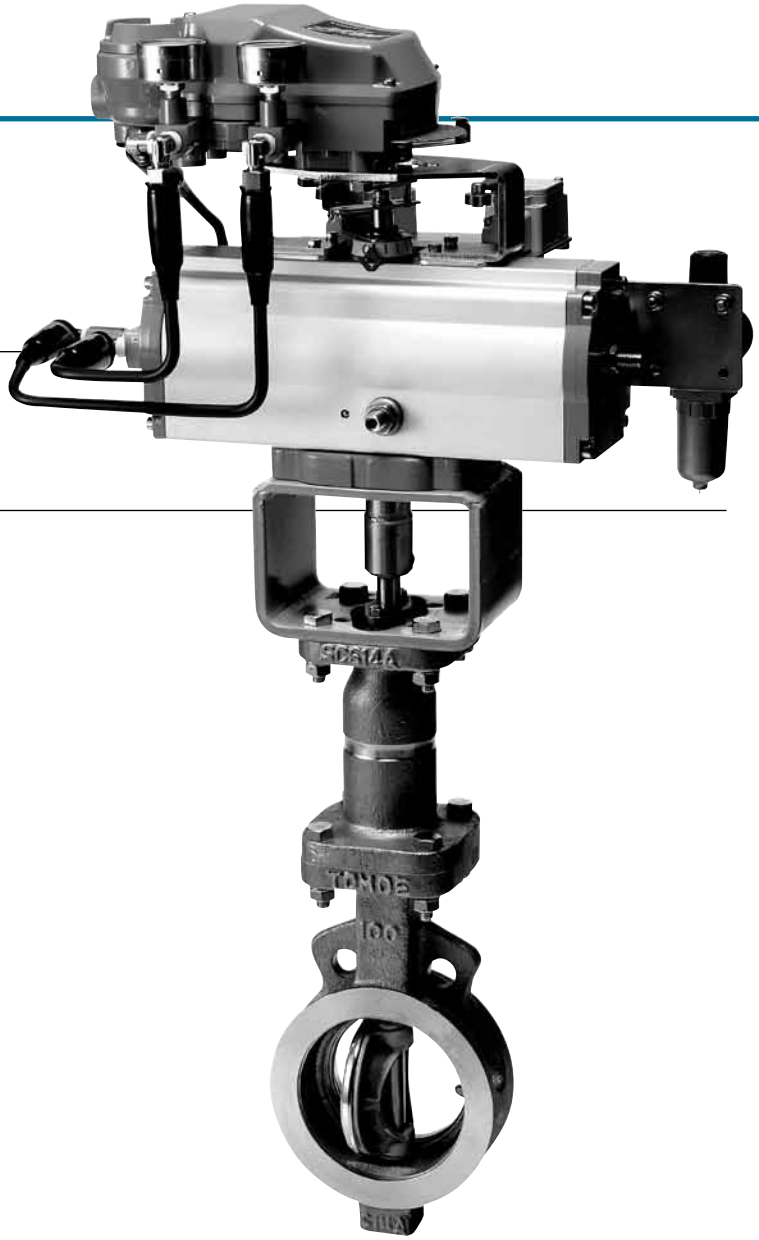

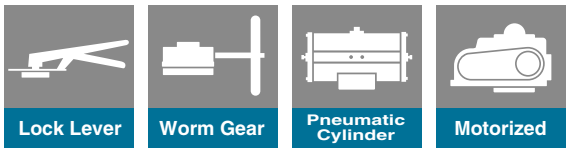

Features and Benefits

Fire safe design

Designed as an inherently fire safe metal seated butterfly valve. Certified to Fire Safe Test as per API 607 4th Edition.

Bi-directional flow

Seals flow in both directions. The valves can be used even if the flow changes direction. (There are pressure limitations for each direction of flow. See chart for recommended specifications).

Disc with reinforced rib

Discs up to 300mm have a thin cross section but feature a reinforcing rib. As for 350mm to 600mm, the disc rib has a convex figuration. These designs successfully reduce thermal expansion and provide a constant sealing performance against any change in temperature or pressure of the fluid.

Double offset geometry

The axis of disc rotation is double offset to the seat ring. When the disc rotates, it unseats at a small turning angle by its cam effect. This prevents seat wear and provides reliable sealing performance over long periods.

Metal Seat

The resilient metal seat ring with coil spring compensates for thermal expansion or contraction of the body or disc. The ball lock method is adopted to facilitate replacement of the seat ring.

Improved reliability

By minimising the effect of friction and the special hard facing of the seating, the reliability of this metal seat butterfly valve is dramatically improved. The key connection of the disc and stem will prevent the direct effect of heat transaction from the stem to the disc as well as provide an anti-blow-out facility on the stem.

General description

Inherent fire safe design with carbon steel or stainless steel body with ASME/ANSI B16.34 Class 150 rating and API 609 pressure temperature rating. Ideal for use in general hydrocarbon, chemical process, low pressure steam and gas applications.

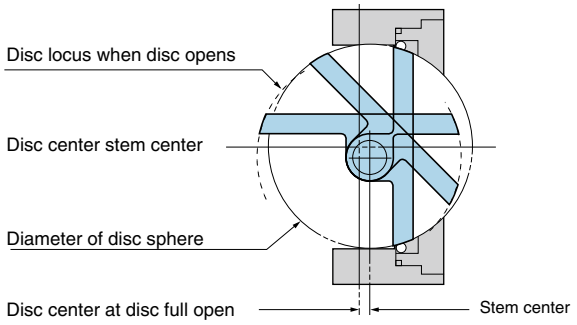

Double-Eccentric Disc

The axis of disc rotation is double eccentric to the seat rings. When the disc rotates, it unseats at a small turning angle by its cam effect. This prevents seat wear and provides a perfect seal for long periods.

Fire Safe Seat Design

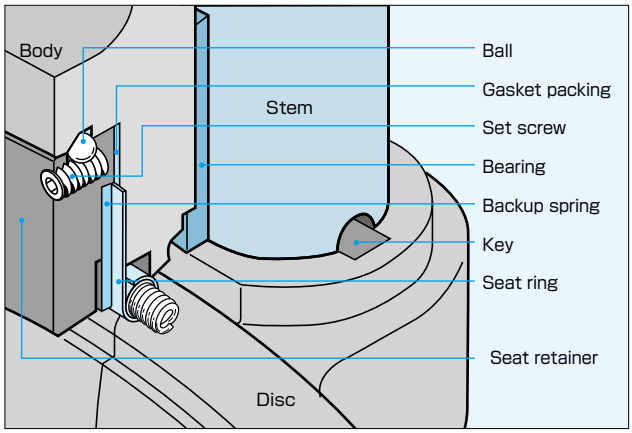

Standard Specifications

Valve nominal size※1		80, 100, 125, 150, 200, 250, 300mm		350, 400, 450, 500, 600mm
Applicable flange standard		JIS 10K/16K/20K ANSI 125/150Lb API/JPI 150Lb BS10 Table F BS 4504 PN 10/16 DIN NP10/16		JIS 5K/10K/16K/20K ANSI 125/150Lb API/JPI 150Lb BS10 Table E BS 4504 PN 10/16 DIN NP10/16
Face-to-face dimensions		API 609(class 150Lb, category B), JPI-7S-83(class 150Lb) ※125mmis as per JIS B 2002 (series 46)/ISO 5752 (series 20)		
Seat leakage		API 598-7th Edition※		
Connection		Double Offset Wafer Type (Option:Flanged,Lugged)		
Pressure-temperatue-rating※2		API 609 class 150Lb category B, ASME/ANSI B16.34 class 150Lb		
Fire safe		API 607 4th Edition		
Max. working pressure ※2		2.0MPa		
Working temperature range※3		–29 to 600 degrees C (Ext. bonnet is required at 400 degrees C and or over)		
Flow direction		Bi-directional flow (Flow to disc side is recommended.) Flow to disc side (2.0 MPa) Flow to stem side (1.0 MPa)※4		
Pressure test	Body shell	3.1 MPa (API 598 7th Edition) by hydraulic		
	Seat leak	7 bar (API 598 7th Edition) by air		
Standard materials	Body	SCPH2/WCB, SCS 14A/CF8M		SCPH2/WCB, SCS 13A/CF8, SCS 14A/CF8M
	Disc	80mm to 150mm	200mm to 300mm	350mm to 600mm
		SCS 16A(hard chrome plating)	SCS 14A(hard chrome plating)	SCS 13A(hard chrome plating), SCS 14A(hard chrome plating)
	Stem	SUS 420J2, SUS 329J1, SUS 316, SUS 329J4L		SUS 420J2, SUS 304, SUS 630
	Seat ring	SUS316L		
Coating		Silicon resin coating (Grey N7) for under 200 degrees C Heat resistant silver coating for 200 degrees C and over. No coating for stainless steel.		
Option		Anti-static device		

※1. Please use 302Y or 337Y if using a nominal valve diameter of 50mm and 65mm.
※2. Refer to pressure – temperature rating chart on page 302A/303Q-05.
※3. Contact us at 400 degrees C and or over for oxidizing atmosphere.
※4. Contact us regarding 350～600mm flowing to stem side.

※It is possible that seat leakage occur when fluid (e.g. powder and/or liquid) is solidified by working temperature and other cause. Consult us.
Please note that use with vertical line such as bottom area of discharge spout of hopper, and tank.

Allowable leakage rate for closure test (API 598)

Nominal size	Duration	Fluid	Allowable rate
80mm～150mm	1min	air	24bubbles / min or less(approx.1.5cc / min)
200mm～300mm	2min		40bubbles / min or less(approx.2.5cc / min)
350mm～600mm	2min		56bubbles / min or less(approx.3.5cc / min)

302A Expanded view of components

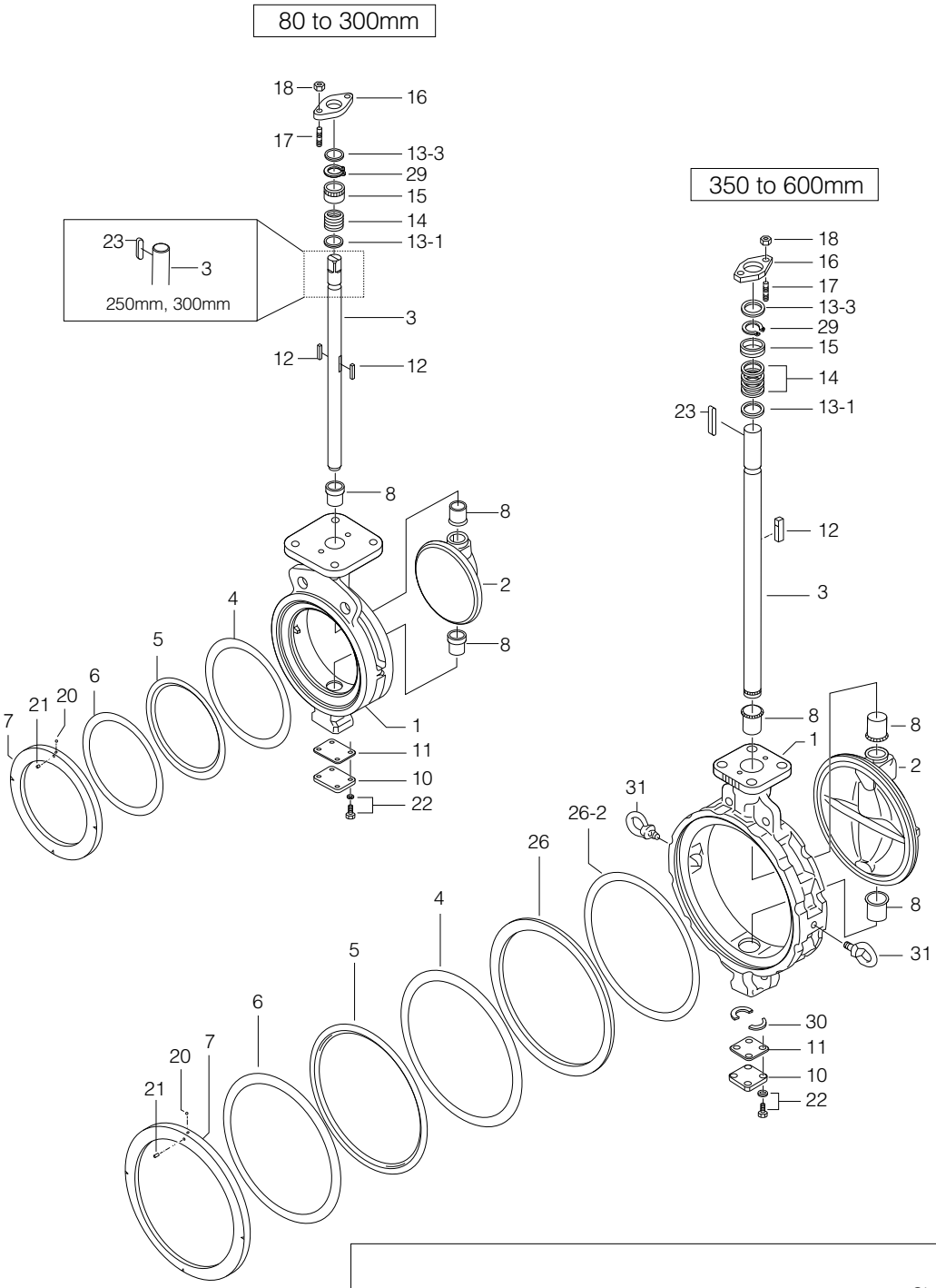

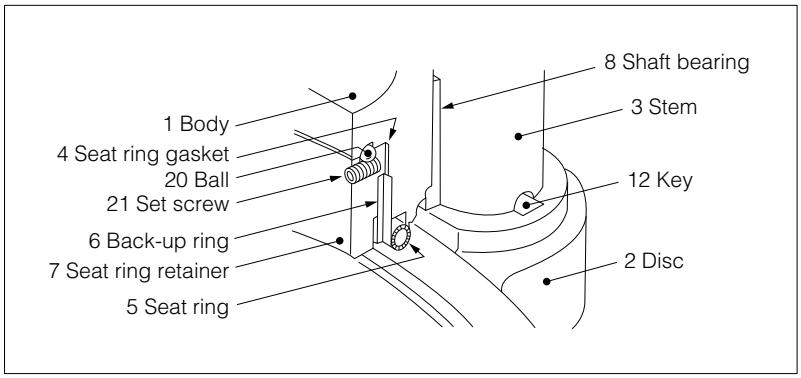

■302A Parts List (80mm to 300mm: −29 to 400 degrees C)

No.	Description	Q'ty	Remarks
1	Body	1	
2	Disc	1	
3	Stem	1	
★ 4	Seat ring gasket	1	
★ 5	Seat ring	1	
★ 6	Back-up ring	1	
7	Seat ring retainer	1	
8	Shaft bearing	3	
10	Bottom cover	1	
★ 11	Bottom gasket	1	
12	Key	2	
13-1	Packing retainer	1	
13-3	Ring	1	
★ 14	Gland packing	1 set	
15	Gland bush	1	
16	Gland flange	1	
17	Gland bolt	2	80mm to 125mm
18	Gland nut	2	150mm to 300mm
★ 20	Ball	2	80mm to 125mm
		4	150mm to 300mm
★ 21	Set screw	2	
		4	Only 250mm, 300mm
22	Hexagon bolt, Spring washer	4 sets	
23	Stem key	1	
29	C-ring	1	

■302A Parts List (350mm to 600mm: −29 to 400 degrees C)

No.	Description	Q'ty	Remarks
1	Body	1	
2	Disc	1	
3	Stem	1	
★ 4	Seat ring gasket	1	
★ 5	Seat ring	1	
★ 6	Back-up ring	1	
7	Seat ring retainer	1	
8	Shaft bearing	3	
10	Bottom cover	1	
★ 11	Bottom gasket	1	
12	Key	1	
13-1	Packing retainer	1	
13-3	Ring	1	
★ 14	Gland packing	1 set	
15	Gland bush	1	
16	Gland flange	1	
17	Gland bolt	2	
18	Gland nut	2	
★ 20	Ball	4	
★ 21	Set screw	4	
22	Hexagon bolt, Spring washer	4 sets	
23	Stem key	1	
26	Sub-retainer	1	
26-2	Seat spacer	1	Only 350mm
29	C-ring	1	
30	Thrust ring	2	
31	Eye bolt	2	Only 450mm to 600mm

Remark: The ★ indicates recommended spare parts. They are supplied as "Seat ring set" with a small hexagonal spanner to remove set screws (Part #21 set screw).

302A Actuator Selection Chart

■80mm to 300mm

Model	Category	Size (mm/inch) 80 / 3	100 / 4	125 / 5	150 / 6	200 / 8	250 / 10	300 / 12
1T	T_{10} / T_{20}	1T-2			1T-3			
2U,2S	T_{10} / T_{20}	2U-2			2U-4	DGH-2	DGH-3	
7E,3A	T_{10}	T85	T200		T380	T750		
	T_{20}	T200		T380			TGA-125	
7G,7F 3U,3K	T_{10}	T200S	T380S	T750S		TG-12S		
	T_{20}	T380S	T750S		TG-10S		TG-14S	
4I	T_{10}	4I-0	4I-1	4I-2		4I-2.5	4I-3	
	T_{20}	4I-1	4I-2		4I-2.5	4I-3		
4J,4L	T_{10}	SRJ-010	SRJ-020			SRJ-060		
	T_{20}	SRJ-010	SRJ-020		SRJ-060	SRJ-1	LTKD-01 0.2kW/DGH-3	

■302A Pressure Rating

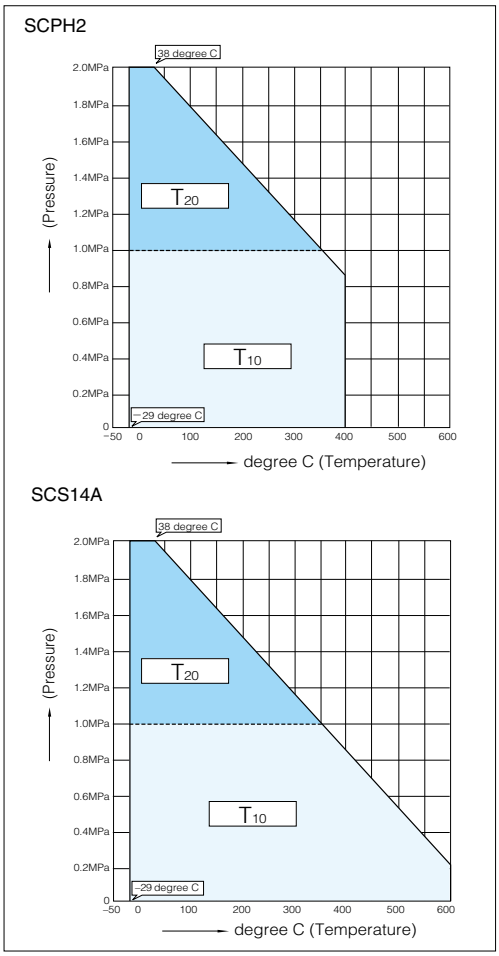

302A Standard Stem Material

■80mm to 300mm

SCS 14A/CF8M Body

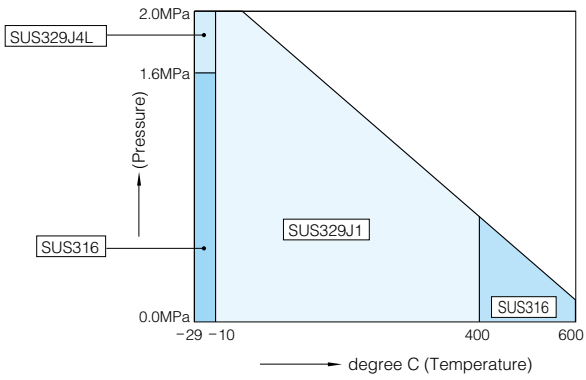

Pressure \ Temp.	−29 to less than −10 degrees C	−10 to less than 400 degrees C	400 to 600 degrees C
0 to less than 1.6MPa	SUS 316	SUS 329J1	SUS 316
1.6 to 2.0MPa	SUS 329J4L		

SCPH2/WCB Body

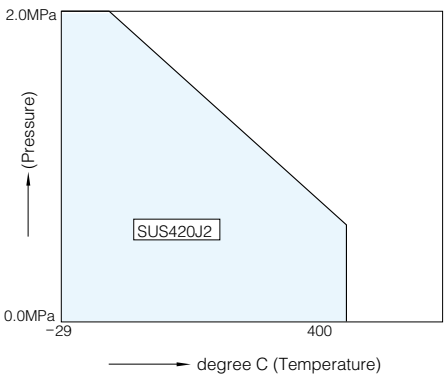

Pressure \ Temp.	−29 to less than 400 degrees C
0 to 2.0MPa	SUS 420J2

※1 Framed description shows stem material.
※2 Refer to Pressure - Temperature chart.
※3 Consult us regarding other materials.

302A Actuator Selection Chart

■350mm to 600mm

Model	Cate-gory	Size (mm/inch) 350 / 14	400 / 16	450 / 18	500 / 20	600 / 24
2S	A	DGH-3	DGH-3	DGH-4	DGH-4	DGH-4+R/G5
	B	DGH-3	DGH-4	DGH-4	DGH-4+R/G5	DGH-4.5 +R/G5
	C	DGH-3	DGH-4	DGH-4+R/G5	DGH-4+R/G5	DGH-4.5 +R/G5
3A	A	TGA-125	TGA-140	TGA-140	TGA-160	TGA-180
	B	TGA-140	TGA-140	TGA-160	TGA-180	TGA-200
	C	TGA-140	TGA-160	TGA-160	TGA-180	TGA-220
3U,3K	A	TG-14S	TG-14S	TG-20S	TG-20S	TG-20S
	B	TG-20S	TG-20S	TG-20S	TG-20S	TG-20S
	C	TG-20S	TG-20S	TG-20S	TG-20S	TG-20S
4 I	A	4 I -4	4 I -4	4 I -4	4 I -4	4 I -4
	B	4 I -4	4 I -4	4 I -4	4 I -4	4 I -4
	C	4 I -4	4 I -4	4 I -4	4 I -4	4 I -4
4L	A	LTKD-01 0.2kW/DGH-3	LTKD-02 0.4kW/DGH-4	LTKD-02 0.75kW/DGH-4	LTKD-02 0.75kW/DGH-4	LTKD-02 1.5kW/DGH-4
	B	LTKD-02 0.4kW/DGH-4	LTKD-02 0.4kW/DGH-4	LTKD-02 0.75kW/DGH-4	LTKD-02 0.75kW/DGH-4	LTKD-02 1.5kW/DGH-5
	C	LTKD-02 0.4kW/DGH-4	LTKD-02 0.75kW/DGH-4	LTKD-02 0.75kW/DGH-4	LTKD-02 1.5kW/DGH-4	LTKD-05 1.5kW/DGH-5

■302A Pressure Rating

SCPH2

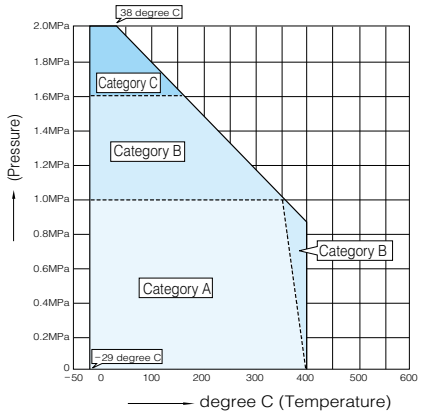

SCS13A

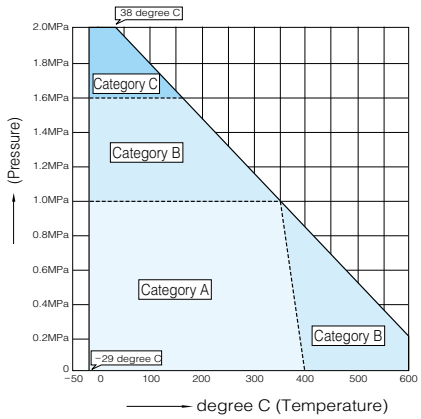

302A Standard Stem Material

■350mm to 600mm

SCS 13A/CF8, SCS 14A/CF8M Body

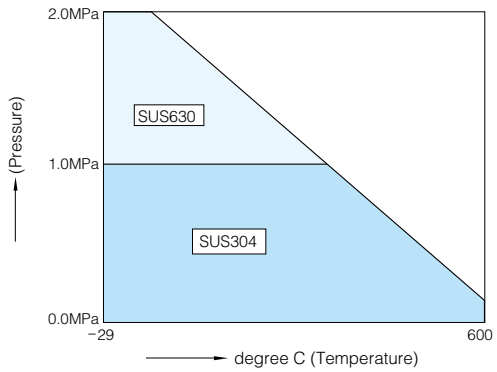

Pressure \ Temp.	−29 to 600 degrees C
0 to less than 1.0MPa	SCS 13A body: SUS 304 SCS 14A body: SUS 316
1.0 to 2.0MPa	SUS 630

SCPH2/WCB Body

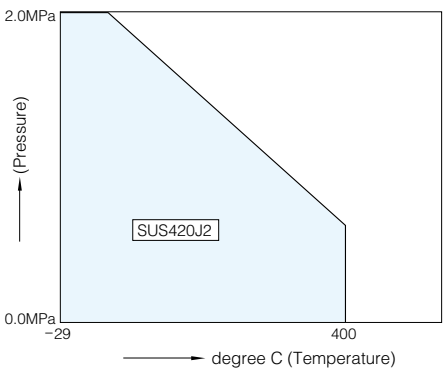

Pressure \ Temp.	−29 to less than 400 degrees C
0 to 2.0MPa	SUS 420J2

※1 Framed description shows stem material.
※2 Refer to Pressure - Temperature chart.
※3 Consult us regarding other materials.

Dimension List

■302A 80mm～200mm

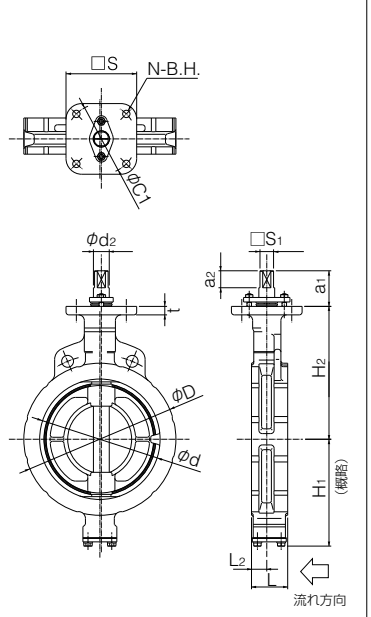

■302A 250mm～400mm

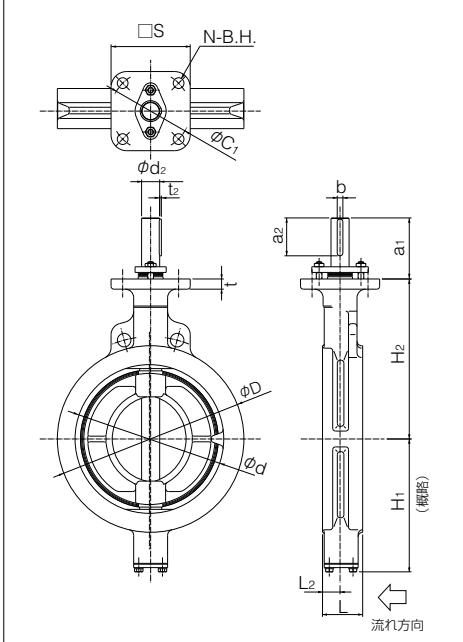

■302A 450mm～600mm

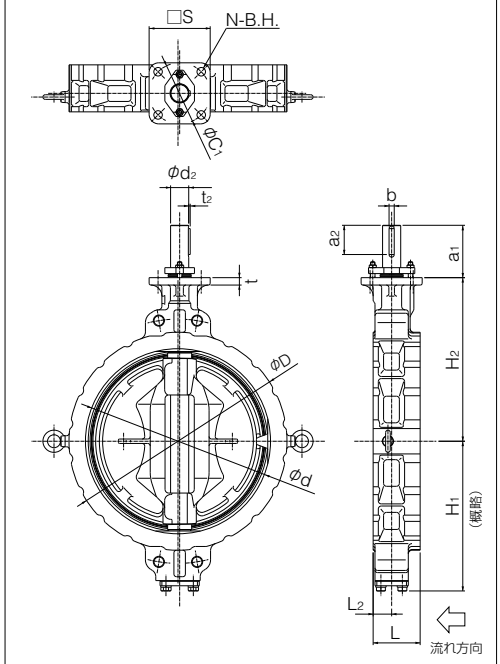

■−29 to less than 400 degrees C

Stem shape	Nominal size		Dimension (mm)														Approx. Weight (kg)
	mm	inch	φd	φ1	L	L_2	H_1	H_2	a_1	a_2	□S_1	φd_2	b	t_2	t	ISO 5211 Top Flange	
01	80	3	89	127	48	22	95	147	52.5	16.5	14	16	–	–	15	F10	5
	100	4	112	156	54	24	110	170	52.5	16.5	14	16	–	–	15	F10	6.2
	125	5	137	185	56	23	139	185	52.5	16.5	16	20	–	–	15	F10	9.3
	150	6	163	216	57	23.5	164	205	55.5	20	18	22	–	–	15	F12	12.5
	200	8	213	269	64	27	190	235	63	30	24	28	–	–	15	F12	19
02	250	10	263	330	71	31	236	283	108	67.3	–	32	10	3	18	F14	33
	300	12	315	381	81	35	246	310	113	72.3	–	35	10	3	18	F14	42
	350	14	350	416	92	39.5	308	340	113	72	–	38	10	3	18	F14	61
	400	16	400	475	102	39	348	372	113	72	–	42	12	3.5	18	F14	88
	450	18	450	534	114	43	366	406	141.5	68	–	45	12	3.5	20	F16	135
	500	20	500	589	127	50	405	442	141.5	79	–	49	14	4	20	F16	173
	600	24	600	693	154	64	461	493	141.5	80	–	59	16	5	20	F16	272

Stem shape	01 : square 02 : round with key

■Top Flange Dimension

ISO 5211 Top Flange	□S	φC_1	N	B.H.
F10	102	102	4	11
F12	125	125	4	13
F14	140	140	4	19
F16	165	165	4	23

302A Bare Shaft (01: 80mm to 200mm, 02: 250mm to 600mm)

■302A 80mm～200mm
(High-Temperature Extension Bonnets)

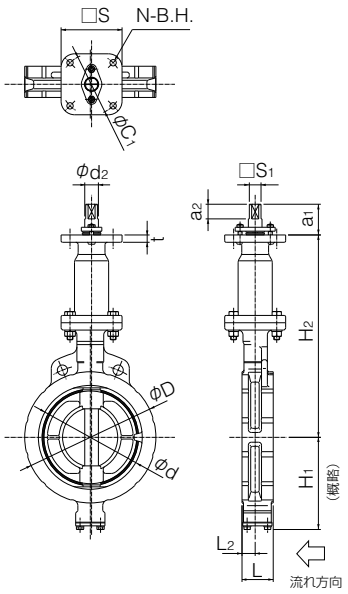

■302A 250mm～400mm
(High-Temperature Extension Bonnets)

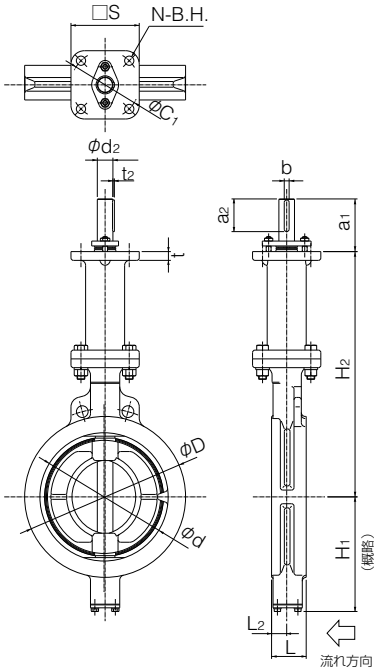

■302A 450mm～600mm
(High-Temperature Extension Bonnets)

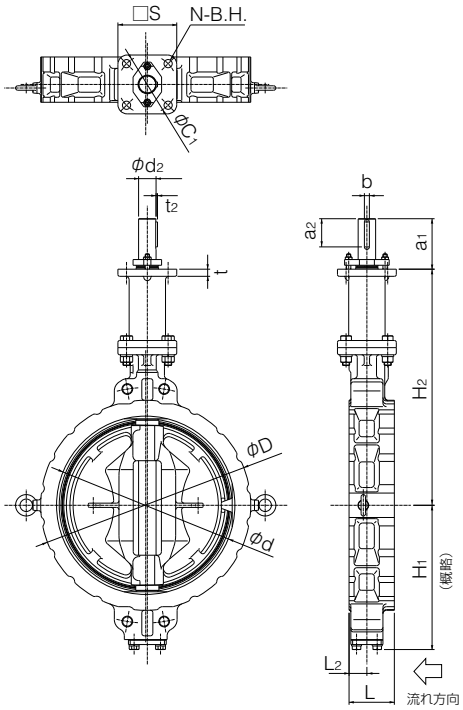

■400 to less than 600 degrees C (High-Temperature Extension Bonnets)

Stem shape	Nominal size		Dimension (mm)														Approx. Weight (kg)
	mm	inch	φd	φD	L	L_2	H_1	H_2	a_1	a_2	□S_1	φd_2	b	t_2	t	ISO 5211 Top Flange	
01	80	3	89	127	48	22	95	297	52.5	16.5	14	16	–	–	15	F10	10.3
	100	4	112	156	54	24	110	320	52.5	16.5	14	16	–	–	15	F10	11.5
	125	5	137	185	56	23	139	335	52.5	16.5	16	20	–	–	15	F10	14.7
	150	6	163	216	57	23.5	164	385	55.5	20	18	22	–	–	15	F12	20
	200	8	213	269	64	27	190	415	63	30	24	28	–	–	15	F12	27
02	250	10	263	330	71	31	236	503	108	67.3	–	32	10	3	18	F14	46
	300	12	315	381	81	35	246	530	113	72.3	–	35	10	3	18	F14	55
	350	14	350	416	92	39.5	308	560	113	72	–	38	10	3	18	F14	76
	400	16	400	475	102	39	348	592	113	72	–	42	12	3.5	18	F14	104
	450	18	450	534	114	43	366	626	141.5	68	–	45	12	3.5	20	F16	152
	500	20	500	589	127	50	405	662	141.5	79	–	49	14	4	20	F16	191
	600	24	600	693	154	64	461	713	141.5	80	–	59	16	5	20	F16	291

Stem shape	01 : square 02 : round with key

■Top Flange Dimension

ISO 5211 Top Flange	□S	φC_1	N	B.H.
F10	102	102	4	11
F12	125	125	4	13
F14	140	140	4	19
F16	165	165	4	23

Lock Lever Type 302A-1T (80mm to 150mm)

■−29 to less than 250 degrees C

Nominal size		Dimension (mm)									Lever type	Approx. Weight (kg)
mm	inch	Φd	ΦD	L	L_2	H_1	H_2	Category	H_3	W		
80	3	89	127	48	22	95	147	T_{10}, T_{20}	117	300	1T-2	7.1
100	4	112	156	54	24	110	170	T_{10}, T_{20}	117	300	1T-2	8.3
125	5	137	185	56	23	139	185	T_{10}, T_{20}	117	300	1T-2	11.4
150	6	163	216	57	23.5	164	205	T_{10}, T_{20}	125	350	1T-3	14.6

■250 to less than 400 degrees C

Nominal size		Dimension (mm)									Lever type	Approx. Weight (kg)
mm	inch	Φd	ΦD	L	L_2	H_1	H_2	Category	H_3	W		
80	3	89	127	48	22	95	147	T_{10}, T_{20}	217	300	1T-2	9.7
100	4	112	156	54	24	110	170	T_{10}, T_{20}	217	300	1T-2	10.9
125	5	137	185	56	23	139	185	T_{10}, T_{20}	217	300	1T-2	14.2
150	6	163	216	57	23.5	164	205	T_{10}, T_{20}	297	350	1T-3	21.3

■400 to 600 degrees C

Nominal size		Dimension (mm)									Lever type	Approx. Weight (kg)
mm	inch	Φd	ΦD	L	L_2	H_1	H_2	Category	H_3	W		
80	3	89	127	48	22	95	297	T_{10}	217	300	1T-2	15
100	4	112	156	54	24	110	320	T_{10}	217	300	1T-2	16.2
125	5	137	185	56	23	139	335	T_{10}	217	300	1T-2	19.6
150	6	163	216	57	23.5	164	385	T_{10}	297	350	1T-3	28.8

■302A-1T

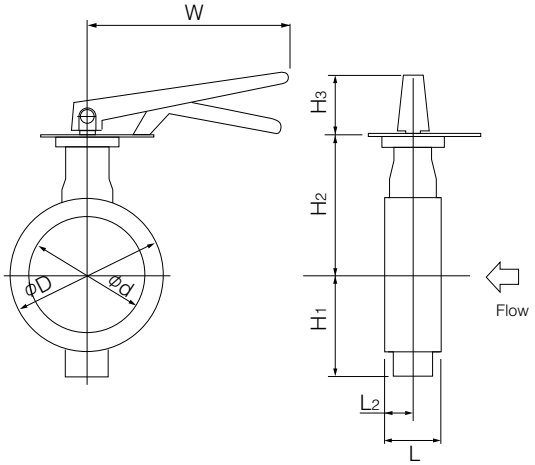

■302A-1T Actuator Mounting Finish by Temperature

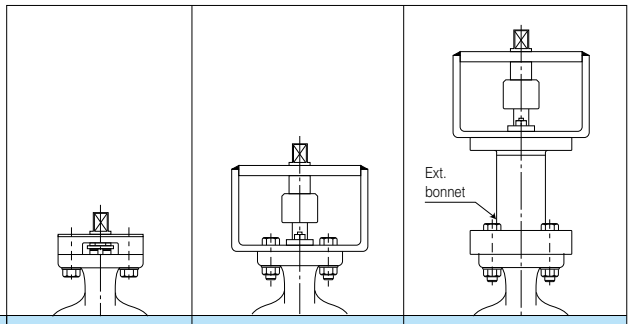

Temp.range		−29 to less than 250 degrees C	250 to less than 400 degrees C	400 to 600 degrees C
Body	80mm to 150mm	SCS14A SCPH2		SCS14A

■1T Installation Direction

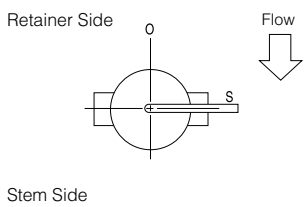	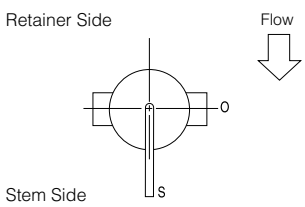	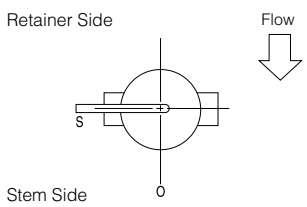	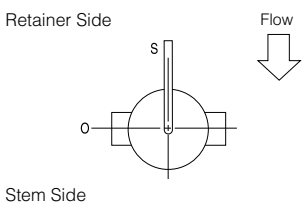
1TA	1TB	1TC	1TD

Worm Gear Type 302A-2U (80mm to 150m) / 302A-2S (200mm to 600mm)

■−29 to less than 250 degrees C

Nominal size		Dimension (mm)												Gear type	Approx. Weight (kg)
mm	inch	Φd	ΦD	L	L_2	H_1	H_2	Category	H_3	E	K	F	ΦW		
80	3	89	127	48	22	95	147	T_{10},T_{20}	61	44	53	173.5	160	2U-2	7.9
100	4	112	156	54	24	110	170	T_{10},T_{20}	61	44	53	173.5	160	2U-2	9.1
125	5	137	185	56	23	139	185	T_{10},T_{20}	61	44	53	173.5	160	2U-2	12.4
150	6	163	216	57	23.5	164	205	T_{10},T_{20}	77.5	87.5	90	222.5	200	2U-4	29
200	8	213	269	64	27	190	235	T_{10},T_{20}	72	85	126	246	280	DGH-2	33
250	10	263	330	71	31	236	283	T_{10},T_{20}	97	117	164	335	355	DGH-3	62
300	12	315	381	81	35	246	310	T_{10},T_{20}	97	117	164	335	355	DGH-3	72
350	14	350	416	92	39.5	308	340	A,B,C	97	117	164	335	355	DGH-3	99
400	16	400	475	102	39	348	372	A	97	117	164	335	355	DGH-3	124
								B,C	215	140	198	402	450	DGH-4	162
450	18	450	534	114	43	366	406	A,B	127	140	198	402	450	DGH-4	198
								C	127	140	198	432	355	DGH-4+R/G5	200
500	20	500	589	127	50	405	442	A	127	140	198	402	450	DGH-4	236
								B,C	127	140	198	432	355	DGH-4+R/G5	238
600	24	600	693	154	64	461	493	A	127	140	198	432	355	DGH-4+R/G5	338
								B,C	245	185	264	497	355	DGH-4.5+R/G5	413

■250 to less than 400 degrees C

Nominal size		Dimension (mm)												Gear type	Approx. Weight (kg)
mm	inch	Φd	ΦD	L	L_2	H_1	H_2	Category	H_3	E	K	F	ΦW		
80	3	89	127	48	22	95	147	T_{10},T_{20}	134.5	44	53	173.5	160	2U-2	10.5
100	4	112	156	54	24	110	170	T_{10},T_{20}	134.5	44	53	173.5	160	2U-2	11.7
125	5	137	185	56	23	139	185	T_{10},T_{20}	134.5	44	53	173.5	160	2U-2	17.2
150	6	163	216	57	23.5	164	205	T_{10},T_{20}	223	87.5	90	222.5	200	2U-4	35
200	8	213	269	64	27	190	235	T_{10},T_{20}	217	85	126	246	280	DGH-2	39
250	10	263	330	71	31	236	283	T_{10},T_{20}	205	117	164	335	355	DGH-3	75
300	12	315	381	81	35	246	310	T_{10},T_{20}	205	117	164	335	355	DGH-3	85
350	14	350	416	92	39.5	308	340	A , B	205	117	164	335	355	DGH-3	108
400	16	400	475	102	39	348	372	A	205	117	164	335	355	DGH-3	134
								B	215	140	198	402	450	DGH-4	162
450	18	450	534	114	43	366	406	A , B	245	140	198	402	450	DGH-4	212
500	20	500	589	127	50	405	442	A	245	140	198	402	450	DGH-4	250
								B	245	140	198	432	355	DGH-4+R/G5	252
600	24	600	693	154	64	461	493	A	245	140	198	432	355	DGH-4+R/G5	351
								B	245	185	264	497	355	DGH-4.5+R/G5	413

■2U/2S Installation Direction

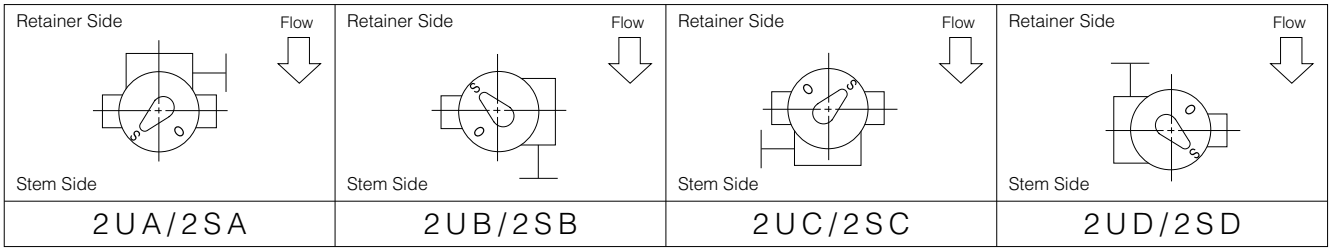

Worm Gear Type 302A-2U（80mm to 150m）/ 302A-2S（200mm to 600mm）

■400 to 600 degrees C

Nominal size		Dimension (mm)												Gear type	Approx. Weight (kg)
mm	inch	Φd	ΦD	L	L_2	H_1	H_2	Category	H_3	E	K	F	ΦW		
80	3	89	127	48	22	95	297	T_{10}	134.5	44	53	173.5	160	2U-2	16
100	4	112	156	54	24	110	320	T_{10}	134.5	44	53	173.5	160	2U-2	17.2
125	5	137	185	56	23	139	335	T_{10}	134.5	44	53	173.5	160	2U-2	22.7
150	6	163	216	57	23.5	164	385	T_{10}	223	87.5	90	222.5	200	2U-4	42.5
200	8	213	269	64	27	190	415	T_{10}	217	85	126	246	280	DGH-2	47
250	10	263	330	71	31	236	503	T_{10}	205	117	164	335	355	DGH-3	88
300	12	315	381	81	35	246	530	T_{10}	205	117	164	335	355	DGH-3	98
350	14	350	416	92	39.5	308	560	B	205	117	164	335	355	DGH-3	124
400	16	400	475	102	39	348	592	B	215	140	198	402	450	DGH-4	178
450	18	450	534	114	43	366	626	B	245	140	198	402	450	DGH-4	228
500	20	500	589	127	50	405	662	B	245	140	198	432	355	DGH-4+R/G5	270
600	24	600	693	154	64	461	713	B	245	185	264	497	355	DGH-4.5+R/G5	432

■302A-2U/2S

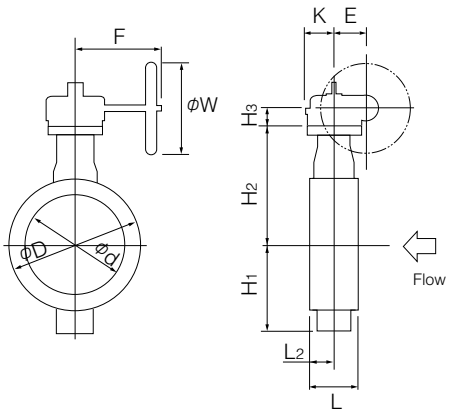

■302A-2U/2S Actuator Mounting Finish by Temperature

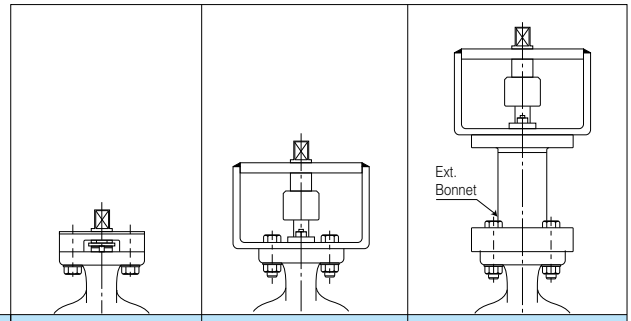

	Temp.range	−29 to less than 250 degrees C	250 to less than 400 degrees C	400 to 600 degrees C
Body	80mm to 300mm	SCS14A SCPH2		SCS14A
Body	350mm to 600mm	SCS13A SCPH2		SCS13A

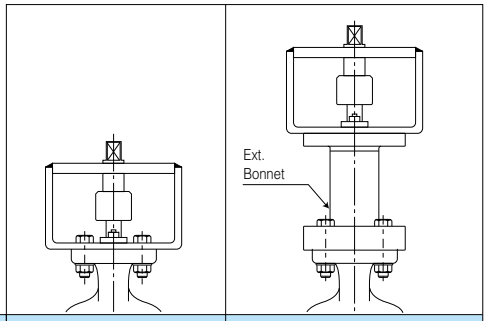

	Temp.range	−29 to less than 400 degrees C	400 to 600 degrees C
Body	400mm (DGH-4) 600mm (DGH-4.5 +R/G5)	SCS13A SCPH2	SCS13A

Double-acting Pneumatic Cylinder Type 302A-7E (80mm to 300mm)

Less than 1.0 MPa

Nominal size		Dimension (mm)												Cylinder type	Approx. Weight (kg)
mm	inch	ϕd	ϕD	L	L_2	H_1	H_2	H_3	H_4	A	P	f_1	f_2		
80	3	89	127	48	22	95	147	168	26.5	276	142	75	47	T85	11
100	4	112	156	54	24	110	170	203	26.5	346	176	79	57	T200	16
125	5	137	185	56	23	139	185	203	26.5	346	176	79	57	T200	19
150	6	163	216	57	23.5	164	205	231	29.5	423	214	91	69	T380	29
200	8	213	269	64	27	190	235	269	29.5	546	270	118	85	T750	45
250	10	263	330	71	31	236	283	269	190	546	270	118	87.5	T750	73
300	12	315	381	81	35	246	310	269	190	546	270	118	87.5	T750	82

1.0 MPa to 2.0 MPa

Nominal size		Dimension (mm)												Cylinder type	Approx. Weight (kg)
mm	inch	ϕd	ϕD	L	L_2	H_1	H_2	H_3	H_4	A	P	f_1	f_2		
80	3	89	127	48	22	95	147	203	26.5	346	176	79	57	T200	12
100	4	112	156	54	24	110	170	203	26.5	346	176	79	57	T200	16
125	5	137	185	56	23	139	185	231	26.5	423	214	91	69	T380	20
150	6	163	216	57	23.5	164	205	231	29.5	423	214	91	69	T380	29
200	8	213	269	64	27	190	235	269	29.5	546	270	118	85	T750	45

■302A-7E

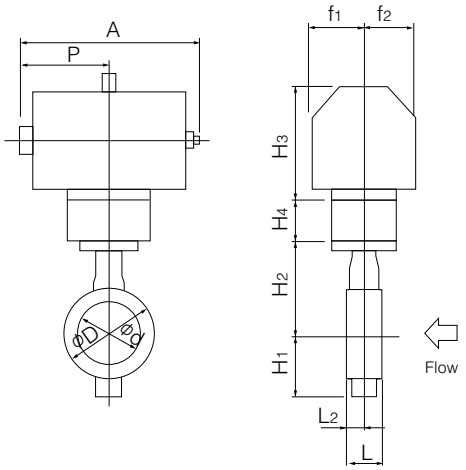

■302A-7E Actuator Mounting Finish by Temperature

		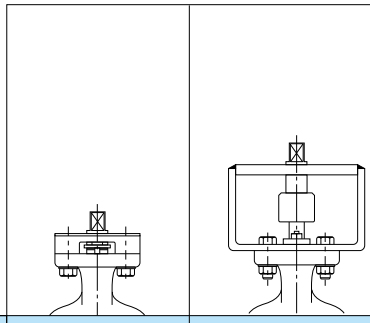		
Temp.range		−29 to less than 250 degrees C	250 to less than 400 degrees C	400 to 600 degrees C
Body	80mm to 200mm	SCS14A SCPH2		SCS14A

		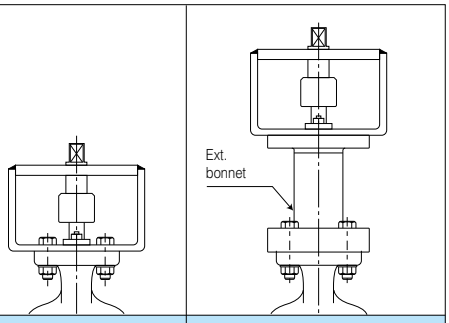	
Temp.range		−29 to less than 400 degrees C	400 to 600 degrees C
Body	250mm 300mm	SCS14A SCPH2	SCS14A
	350mm	SCS13A SCPH2	

■7E Installation Direction

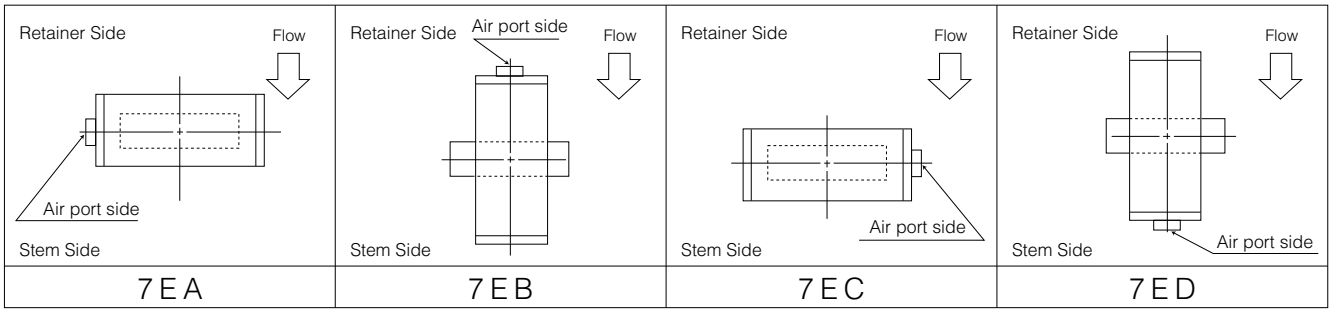

Double-acting Pneumatic Cylinder Type 302A-3A (250mm to 600mm)

■−29 to less than 400 degrees C

Nominal size		Dimension (mm)												Cylinder type	Approx. Weight (kg)
mm	inch	Φd	ΦD	L	L_2	H_1	H_2	Category	H_3	A	P	f_1	f_2		
250	10	263	330	71	31	236	283	T_{20}	424	743	381	100	164	TGA-125	79
300	12	315	381	81	35	246	310	T_{20}	424	743	381	100	164	TGA-125	88
350	14	350	416	92	39.5	308	340	A	424	743	381	100	164	TGA-125	110
								B , C	472	810	417	100	180	TGA-140	121
400	16	400	475	102	39	348	372	A , B	472	810	417	100	180	TGA-140	147
								C	510	939	483	130	202	TGA-160	214
450	18	450	534	114	43	366	406	A	502	810	417	100	180	TGA-140	207
								B , C	530	939	483	130	202	TGA-160	263
500	20	500	589	127	50	405	442	A	530	939	483	130	202	TGA-160	302
								B , C	543	1053	543	130	218	TGA-180	330
600	24	600	693	154	64	461	493	A	543	1053	543	130	218	TGA-180	431
								B	610	1163	599	160	253	TGA-200	475
								C	640	1248	642	160	270	TGA-220	535

■400 to 600 degrees C

Nominal size		Dimension (mm)												Cylinder type	Approx. Weight (kg)
mm	inch	Φd	ΦD	L	L_2	H_1	H_2	Category	H_3	A	P	f_1	f_2		
350	14	350	416	92	39.5	308	560	B	472	810	417	100	180	TGA-140	136
400	16	400	475	102	39	348	592	B	472	810	417	100	180	TGA-140	163
450	18	450	534	114	43	366	626	B	530	939	483	130	202	TGA-160	280
500	20	500	589	127	50	405	662	B	543	1053	543	130	218	TGA-180	348
600	24	600	693	154	64	461	713	B	610	1163	599	160	253	TGA-200	494

■302A-3A

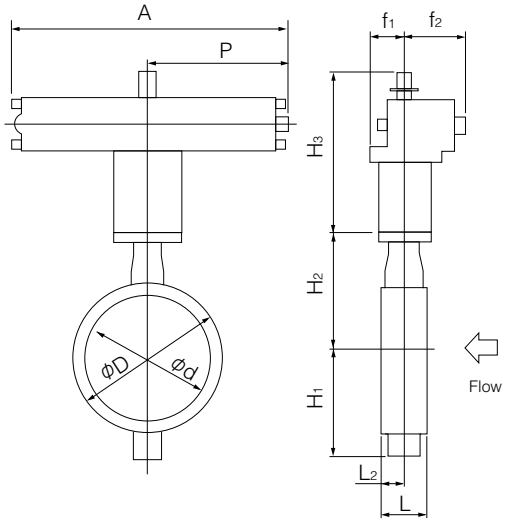

■302A-3A
Actuator Mounting Finish by Temperature

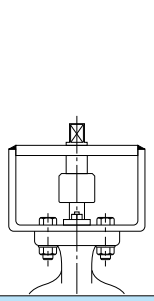

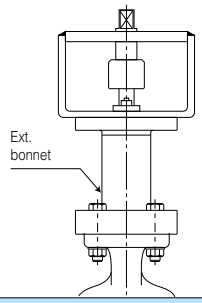

Temp.range		−29 to less than 400 degrees C	400 to 600 degrees C
Body	350mm to 600mm	SCS13A SCPH2	SCS13A

■3A Installation Direction

Retainer Side Flow Stem Side	Retainer Side Flow Stem Side	Retainer Side Flow Stem Side	Retainer Side Flow Stem Side
3AA	3AB	3AC	3AD

Single-acting Pneumatic Cylinder Type 302A-7G (Air to open: 80mm to 150mm) / 302A-7F (Air to close: 80mm to 150mm)

Less than 1.0 MPa

Nominal size		Dimension (mm)												Cylinder type	Approx. Weight (kg)
mm	inch	Φd	ΦD	L	L_2	H_1	H_2	H_3	H_4	A	P	f_1	f_2		
80	3	89	127	48	22	95	147	203	26.5	449	226	79	57	T200S	17
100	4	112	156	54	24	110	170	231	26.5	550	276	91	69	T380S	27
125	5	137	185	56	23	139	185	269	26.5	723	360	118	85	T750S	43
150	6	163	216	57	23.5	164	205	269	29.5	723	360	118	85	T750S	47

1.0 MPa to 2.0 MPa

Nominal size		Dimension (mm)												Cylinder type	Approx. Weight (kg)
mm	inch	Φd	ΦD	L	L_2	H_1	H_2	H_3	H_4	A	P	f_1	f_2		
80	3	89	127	48	22	95	147	231	26.5	550	276	91	69	T380S	26
100	4	112	156	54	24	110	170	269	26.5	723	360	118	85	T750S	40
125	5	137	185	56	23	139	185	269	26.5	723	360	118	85	T750S	43

■7F Installation Direction

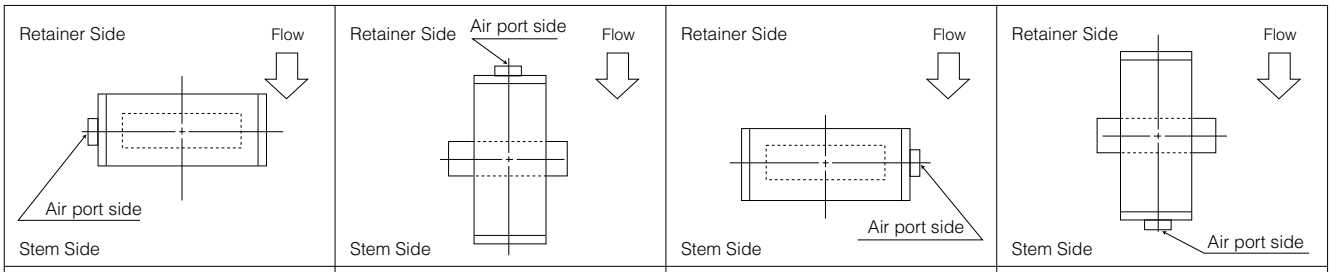

7FA	7FB	7FC	7FD

■302A-7F

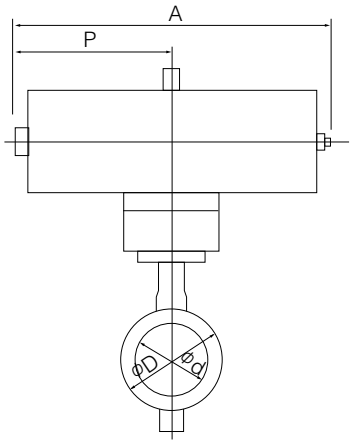

■302A-7G

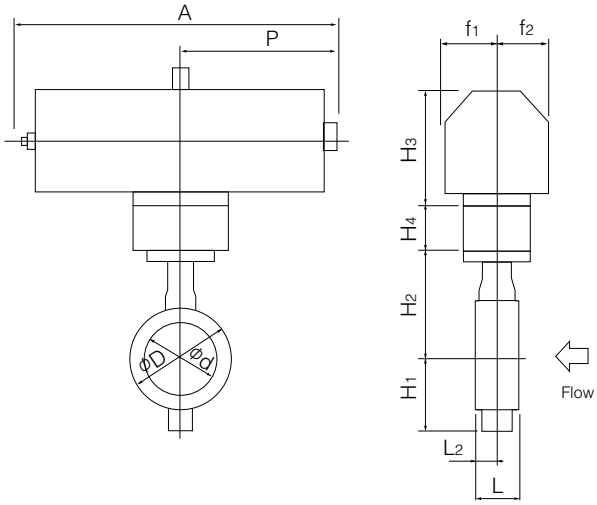

■302A-7F/7G Actuator Mounting Finish by Temperature

		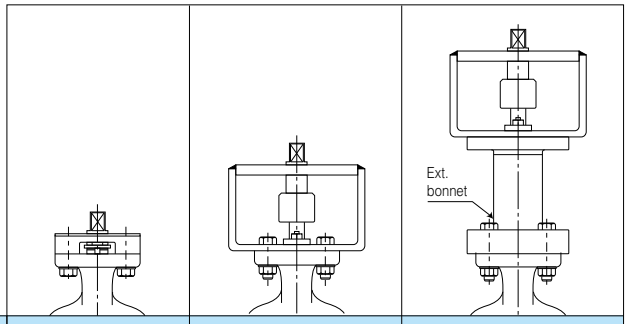		
Temp.range		−29 to less than 250 degrees C	250 to less than 400 degrees C	400 to 600 degrees C
Body	80mm to 150mm	SCS14A SCPH2		SCS14A

■7G Installation Direction

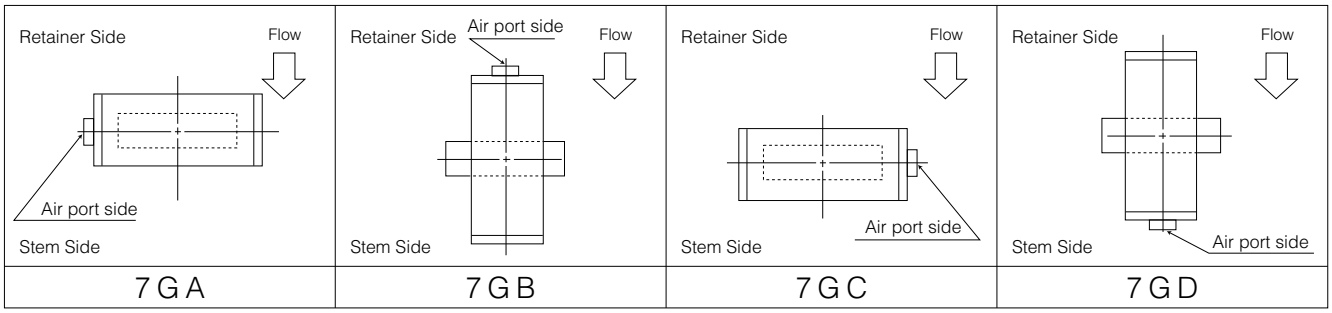

Single-acting Pneumatic Cylinder Type 302A-3U (Air to open: 150mm to 600mm) / 302A-3K (Air to close: 150mm to 600mm)

■−29 to 400 less than degrees C

Nominal size		Dimension (mm)												Cylinder type	Approx. Weight (kg)
mm	inch	Φd	ΦD	L	L_2	H_1	H_2	Category	H_3	A	P	f_1	f_2		
150	6	163	216	57	23.5	164	205	T_{20}	377	945	585	70	165	TG-10S	69
200	8	213	269	64	27	190	235	T_{10},T_{20}	377	1080	720	94	206	TG-12S	122
250	10	263	330	71	31	236	283	T_{10}	417	1080	720	94	206	TG-12S	141
								T_{20}	450	1255	865	131	257	TG-14S	237
300	12	315	381	81	35	246	310	T_{10}	417	1080	720	94	206	TG-12S	150
								T_{20}	450	1255	865	131	257	TG-14S	246
350	14	350	416	92	39.5	308	340	A	450	1255	865	131	257	TG-14S	264
								B,C	602	1655	1095	164	348	TG-20S	485
400	16	400	475	102	39	348	372	A	450	1255	865	131	257	TG-14S	292
								B,C	602	1655	1095	164	348	TG-20S	512
450	18	450	534	114	43	366	406	A,B,C	624	1655	1095	164	348	TG-20S	564
500	20	500	589	127	50	405	442	A,B	624	1655	1095	164	348	TG-20S	602
600	24	600	693	154	64	461	493	A	624	1655	1095	164	348	TG-20S	701

■400 to 600 degrees C

Nominal size		Dimension (mm)												Cylinder type	Approx. Weight (kg)
mm	inch	Φd	ΦD	L	L_2	H_1	H_2	Category	H_3	A	P	f_1	f_2		
200	8	213	269	64	27	190	415	T_{10}	377	1080	720	94	206	TG-12S	130
250	10	263	330	71	31	236	503	T_{10}	417	1080	720	94	206	TG-12S	154
300	12	315	381	81	35	246	530	T_{10}	417	1080	720	94	206	TG-12S	164
350	14	350	416	92	39.5	308	560	B	602	1655	1095	164	348	TG-20S	500
400	16	400	475	102	39	348	592	B	602	1655	1095	164	348	TG-20S	528
450	18	450	534	114	43	366	626	B	624	1655	1095	164	348	TG-20S	582
500	20	500	589	127	50	405	662	B	624	1655	1095	164	348	TG-20S	620

■3K Installation Direction

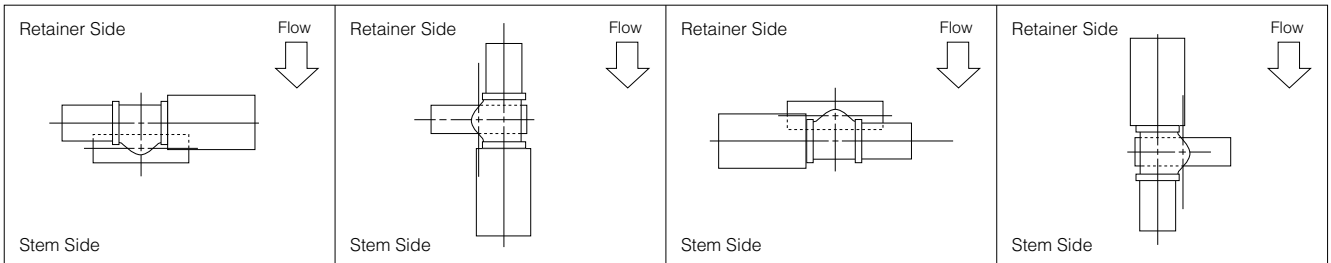

3KA	3KB	3KC	3KD

■302A-3K

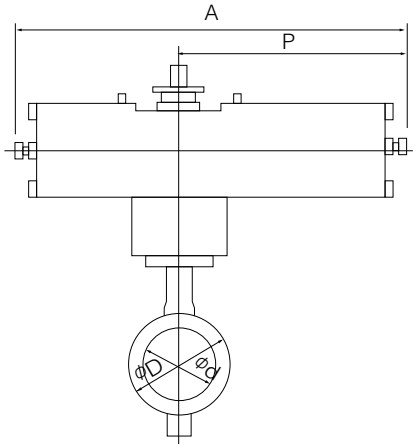

■302A-3U

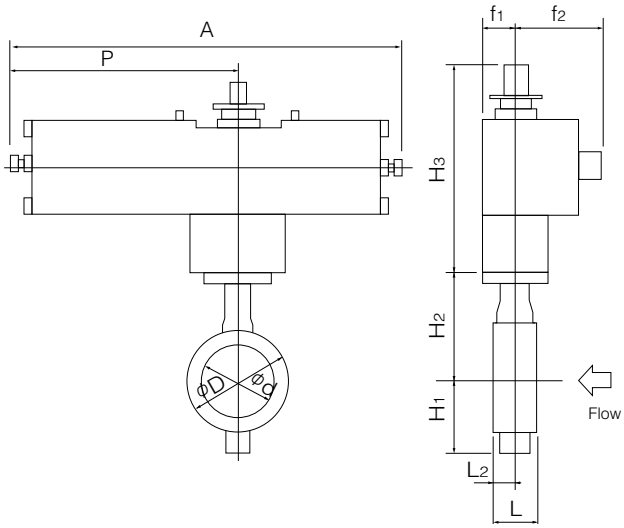

■302A 3U/3K Actuator Mounting Finish by Temperature

		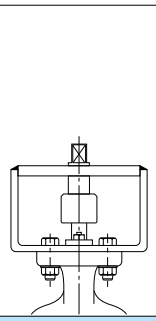	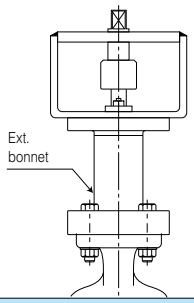
Temp.range		−29 to less than 400 degrees C	400 to 600 degrees C
Body	150mm to 300mm	SCS14A SCPH2	SCS14A
	350mm to 600mm	SCS13A SCPH2	SCS13A

■3U Installation Direction

Retainer Side Flow 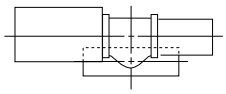 Stem Side	Retainer Side Flow 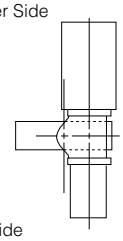 Stem Side	Retainer Side Flow 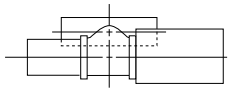 Stem Side	Retainer Side Flow 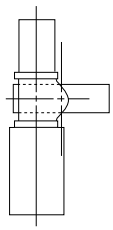 Stem Side
3UA	3UB	3UC	3UD

Single Phase Electric Motor Type 302A-4 I (80mm to 400mm)

■−29 to less than 400 degrees C

Nominal size		Dimension (mm)												Motor type	Approx. Weight (kg)
mm	inch	Φd	ΦD	L	L_2	H_1	H_2	Category	H_3	A	P	F	K		
80	3	89	127	48	22	95	147	T_{10}	250	202	100	85	54	4 I-0	12.1
								T_{20}	265	252	138	126	65	4 I-1	14.3
100	4	112	156	54	24	110	170	T_{10}	265	252	138	126	65	4 I-1	15.5
								T_{20}	298	310	167	154	85	4 I-2	21.5
125	5	137	185	56	23	139	185	T_{10},T_{20}	298	310	167	154	85	4 I-2	24.5
150	6	163	216	57	23.5	164	205	T_{10}	373	310	167	154	85	4 I-2	29.5
								T_{20}	373	310	167	154	85	4 I-2.5	31
200	8	213	269	64	27	190	235	T_{10}	373	310	167	154	85	4 I-2.5	39
								T_{20}	405	388	223	246	136	4 I-3	49
250	10	263	330	71	31	236	283	T_{10},T_{20}	420	388	223	246	136	4 I-3	66
300	12	315	381	81	35	246	310	T_{10},T_{20}	420	388	223	246	136	4 I-3	75
350	14	350	416	92	39.5	308	340	A,B	423	388	223	246	136	4 I-4	96
400	16	400	475	102	39	348	372	A	423	388	223	246	136	4 I-4	123

■400 to 600 degrees C

Nominal size		Dimension (mm)												Motor type	Approx. Weight (kg)
mm	inch	Φd	ΦD	L	L_2	H_1	H_2	Category	H_3	A	P	F	K		
80	3	89	127	48	22	95	297	T_{10}	250	202	100	85	54	4 I-0	17.6
100	4	112	156	54	24	110	320	T_{10}	265	252	138	126	65	4 I-1	21
125	5	137	185	56	23	139	335	T_{10}	298	310	167	154	85	4 I-2	30
150	6	163	216	57	23.5	164	385	T_{10}	373	310	167	154	85	4 I-2	37.5
200	8	213	269	64	27	190	415	T_{10}	373	310	167	154	85	4 I-2.5	47
250	10	263	330	71	31	236	503	T_{10}	420	388	223	246	136	4 I-3	79
300	12	315	381	81	35	246	530	T_{10}	420	388	223	246	136	4 I-3	88
350	14	350	416	92	39.5	308	560	B	423	388	223	246	136	4 I-4	138

■302A-4 I

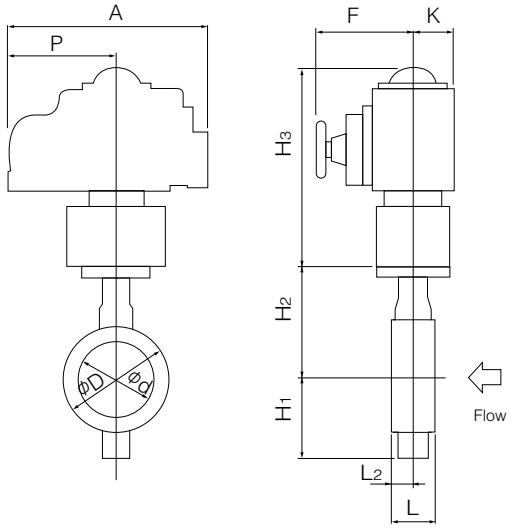

■302A-4 I
Actuator Mounting Finish by Temperature

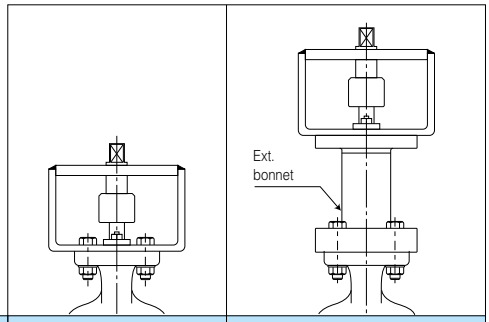

Temp.range		−29 to less than 400 degrees C	400 to 600 degrees C
Body	80mm to 300mm	SCS14A SCPH2	SCS14A
Body	350mm 400mm	SCS13A SCPH2	SCS13A

■4I Installation Direction

Retainer Side Flow Stem Side	Retainer Side Flow Stem Side	Retainer Side Flow Stem Side	Retainer Side Flow Stem Side
4 I A	4 I B	4 I C	4 I D

Three Phase Motor Actuator Type 302A-4L (250mm to 600mm)

■−29 to less than 400 degrees C

Nominal size		Dimension (mm)													Motor type	Approx. Weight (kg)
mm	inch	Φd	ΦD	L	L_2	H_1	H_2	Category	H_3	E	K	F	M	P		
250	10	263	330	71	31	236	283	T_{10}	547	117	164	533	357	230	LTKD-01 0.2kW/ DGH-3	125
300	12	315	381	81	35	246	310	T_{10},T_{20}	547	117	164	533	357	230	LTKD-01 0.2kW/ DGH-3	133
350	14	350	416	92	39.5	308	340	A,B	547	117	164	533	357	230	LTKD-01 0.2kW/ DGH-3	171
								C	592	140	198	593	373	230	LTKD-02 0.4kW/ DGH-4	221
400	16	400	475	102	39	348	372	A	547	117	164	533	357	230	LTKD-01 0.2kW/ DGH-3	197
								B	592	140	198	593	373	230	LTKD-02 0.4kW/ DGH-4	247
								C	592	140	198	593	400	230	LTKD-02 0.75kW/ DGH-4	258
450	18	450	534	114	43	366	406	A	642	140	198	593	373	230	LTKD-02 0.4kW/ DGH-4	308
								B,C	642	140	198	593	400	230	LTKD-02 0.75kW/ DGH-4	319
500	20	500	589	127	50	405	442	A,B,C	642	140	198	593	400	230	LTKD-02 0.75kW/ DGH-4	357
600	24	600	693	154	64	461	493	A	642	140	198	593	400	230	LTKD-02 0.75kW/ DGH-4	460
								B,C	749	210	300	748	477	360	LTKD-05 1.5kW/ DGH-5	605

■400 to 600 degrees C

Nominal size		Dimension (mm)													Motor type	Approx. Weight (kg)
mm	inch	Φd	ΦD	L	L_2	H_1	H_2	Category	H_3	E	K	F	M	P		
300	12	315	381	81	35	246	530	T_{10}	547	117	164	533	357	230	LTKD-01 0.2kW/ DGH-3	146
350	14	350	416	92	39.5	308	560	B	547	117	164	533	357	230	LTKD-01 0.2kW/ DGH-3	186
400	16	400	475	102	39	348	592	B	592	140	198	593	373	230	LTKD-02 0.4kW/ DGH-4	263
450	18	450	534	114	43	366	626	B	642	140	198	593	400	230	LTKD-02 0.75kW/ DGH-4	336
500	20	500	589	127	50	405	662	B	642	140	198	593	400	230	LTKD-02 0.75kW/ DGH-4	375
600	24	600	693	154	64	461	713	B	749	210	300	748	477	360	LTKD-05 1.5kW/ DGH-5	625

■302A-4L

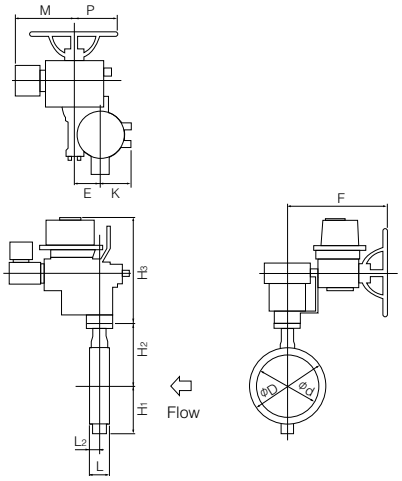

■302A-4L Actuator Mounting Finish by Temperature

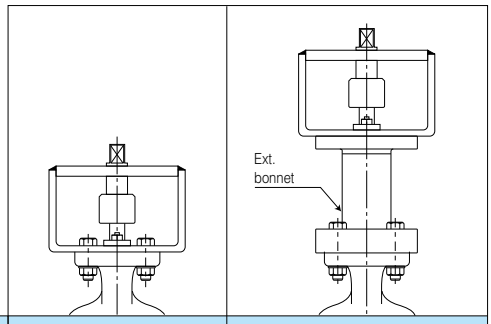

	Temp.range	−29 to less than 400 degrees C	400 to 600 degrees C
Body	250mm 300mm	SCS14A SCPH2	SCS14A
	350mm to 600mm	SCS13A SCPH2	SCS13A

■4L Installation Direction

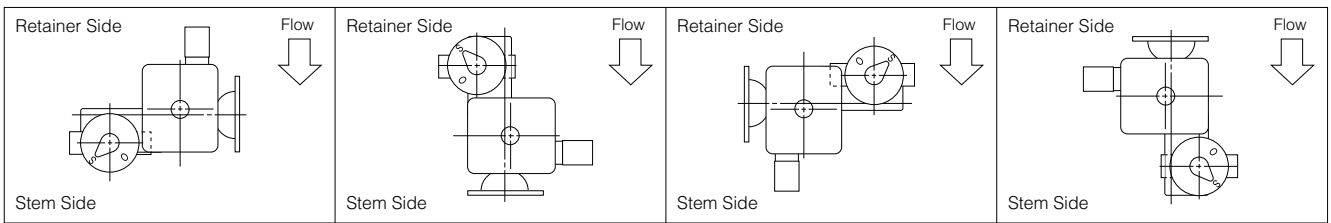

4LA	4LB	4LC	4LD

302A Cv value/pressure loss coefficient

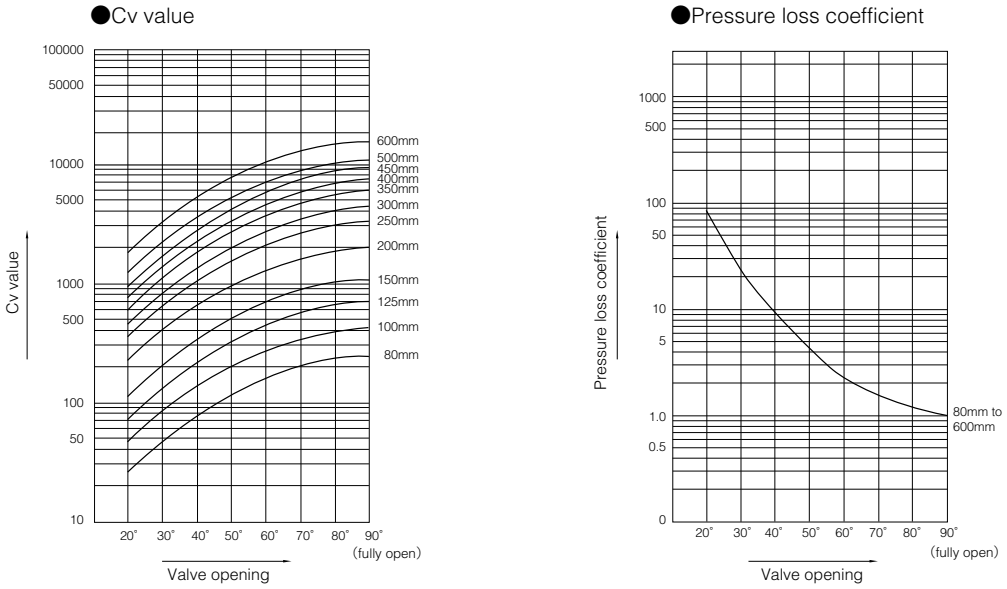

302A Cv value

Nominal size		Valve opening							
mm	inch	20°	30°	40°	50°	60°	70°	80°	90°
80	3	29	52	85	122	162	207	243	252
100	4	49	88	144	207	279	351	414	432
125	5	77	140	230	333	441	549	648	684
150	6	126	225	369	531	720	900	1080	1116
200	8	234	423	693	990	1350	1710	1980	2070
250	10	390	703	1148	1648	2240	2857	3300	3443
300	12	492	888	1454	2081	2838	3612	4172	4354
350	14	648	1170	1915	2741	3739	4758	5496	5736
400	16	829	1496	2449	3505	4780	6084	7027	7334
450	18	1041	1879	3076	4403	6004	7642	8827	9212
500	20	1323	2387	3909	5595	7630	9710	11216	11705
600	24	1929	3481	5700	8159	11126	14161	16356	17070

302A Pressure loss coefficent

Nominal size		Valve opening							
mm	inch	20°	30°	40°	50°	60°	70°	80°	90°
80	3	95	29	11	5	3	2	1	1
100	4	98	30	11	5	3	2	1	1
125	5	93	28	10	5	3	2	1	1
150	6	70	22	8	4	2	1	1	1
200	8	62	19	7	3	2	1	1	1
250	10	54	17	6	3	2	1	1	1
300	12	70	21	8	4	2	1	1	1
350	14	68	21	8	4	2	1	1	1
400	16	73	22	8	4	2	1	1	1
450	18	75	23	9	4	2	1	1	1
500	20	72	22	8	4	2	1	1	1
600	24	70	22	8	4	2	1	1	1

302A Applicable flange standard

Nominal size		JIS				ANSI/API/JPI	BS4504		DIN		BS10
mm	inch	5K	10K	16K	20K	150Lb	PN10	PN16	NP10	NP16	Table E
80	3	×	D	D	D	○	D	D	D	D	×
100	4	×	D	D	D	D	D	D	D	D	×
125	5	×	D	D	D	D	D	D	D	D	×
150	6	×	D	D	D	D	D	D	D	D	×
200	8	×	D	D	D	D	D	D	D	D	×
250	10	×	D	D	D	D	D	D	D	D	×
300	12	×	D	D	D	D	D	D	D	D	×
350	14	D	D	D	D	D	D	D	D	D	D
400	16	D	D	D	D	D	D	D	D	D	D
450	18	D	T	T	T	D	T	T	T	T	D
500	20	T	T	T	T	T	T	T	T	T	T
600	24	T	T	T	T	T	T	T	T	T	T

○ : Can be used without flange drilling.
D : With flange drilling
T : With flange tapping
× : Not applicable

302A Applicable Pipe List in Case of A

Nominal size		SGP		Sch20		Sch40		Sch60		Sch80		Sch10S		Sch20S		Minimum internal diameters of piping (mm)
mm	inch	Retainer (up stream)	Stem Side (down stream)	Retainer (up stream)	Stem Side (down stream)	Retainer (up stream)	Stem Side (down stream)	Retainer (up stream)	Stem Side (down stream)	Retainer (up stream)	Stem Side (down stream)	Retainer (up stream)	Stem Side (down stream)	Retainer (up stream)	Stem Side (down stream)	
80	3	○	○	○	○	○	○	○	○	○	○	○	○	○	○	72.5
100	4	○	○	○	○	○	○	○	○	○	○	○	○	○	○	93.8
125	5	○	○	○	○	○	○	○	○	○	○	○	○	○	○	119.4
150	6	○	○	○	○	○	○	○	×	○	×	○	○	○	○	147.5
200	8	○	○	○	○	○	○	○	×	○	×	○	○	○	○	197.5
250	10	○	○	○	○	○	○	○	×	○	×	○	○	○	○	248.1
300	12	○	○	○	○	○	○	○	×	×	×	○	○	○	○	297.6
350	14	○	○	○	○	○	○	○	×	×	×	—	—	—	—	330.0
400	16	○	○	○	○	○	○	○	×	○	×	—	—	—	—	377.0
450	18	○	○	○	○	○	○	○	×	○	×	—	—	—	—	424.0
500	20	○	○	○	○	○	○	○	×	○	×	—	—	—	—	470.0
600	24	—	—	○	○	○	○	○	×	×	×	—	—	—	—	564.0

302A Applicable Pipe List in Case of B

Nominal size		SGP		Sch20		Sch40		Sch60		Sch80		Sch10S		Sch20S	
mm	inch	Retainer (up stream)	Stem Side (down stream)	Retainer (up stream)	Stem Side (down stream)	Retainer (up stream)	Stem Side (down stream)	Retainer (up stream)	Stem Side (down stream)	Retainer (up stream)	Stem Side (down stream)	Retainer (up stream)	Stem Side (down stream)	Retainer (up stream)	Stem Side (down stream)
80	3	○	○	○	○	○	○	○	○	○	○	○	○	○	○
100	4	○	○	○	○	○	○	○	○	○	○	○	○	○	○
125	5	○	○	○	○	○	○	○	○	○	○	○	○	○	○
150	6	○	○	○	○	○	○	○	○	○	○	○	○	○	○
200	8	○	○	○	○	○	○	○	×	○	×	○	○	○	○
250	10	○	○	○	○	○	○	○	×	○	×	○	○	○	○
300	12	○	○	○	○	○	○	○	×	○	×	○	○	○	○
350	14	○	○	○	○	○	○	○	×	○	×	—	—	—	—
400	16	○	○	○	○	○	○	○	×	○	×	—	—	—	—
450	18	○	○	○	○	○	○	○	×	○	×	—	—	—	—
500	20	○	○	○	○	○	○	○	×	○	×	—	—	—	—
600	24	—	—	○	○	○	○	○	×	○	×	—	—	—	—

Remark 1: ○=Applicable ×=Not applicable
Remark 2: The clearance between the disc and the pipe is based on API 609 and MSS SP-67.
80mm to 150mm: 1.5mm; 200mm to 500mm: 3.0mm, and 600mm: 6.4mm
Remark 3: Butterfly valves are inserted into a pipe that was fitted with the disc when fully open.
In cases where there is an "X" in the chart above or you are using a pipe or flange that is less than the minimum inner pipe diameter, use is still possible if means are taken such as inserting a spacer between the valve and flange. For details, please consult us.

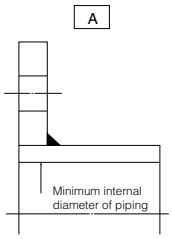

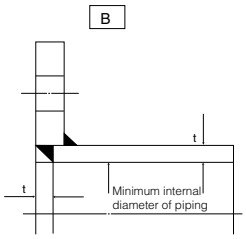

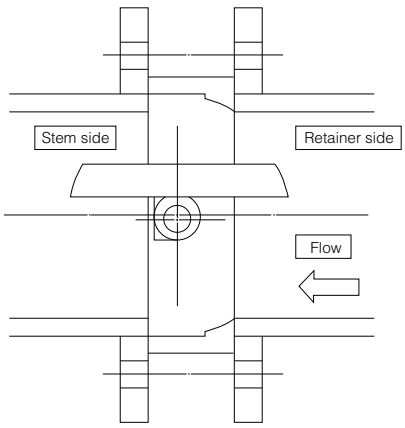

302A Piping gasket

- ●In case of sheet gasket ..... Any standard can be used.
- ●In case of spiral gasket
  - For API, JPI, ANSI flange ..... Any standard gaskets with inner/outer ring can be used.
  - For JIS flange ..... Use special spiral gasket shown below.

■Special spiral gasket for JIS flange size

Nominal size		JIS flange					
		5K, 10K, 16K, 20K			5K	10K	16K, 20K
mm	inch	D_1	D_2	D_3	D_4	D_4	D_4
80	3	89	97	120	×	134	140
100	4	115	124	145	×	159	165
125	5	140	151	177	×	190	202
150	6	166	178	205	×	220	237
200	8	217	227	256	×	270	282
250	10	268	278	315	×	332	354
300	12	319	331	362	×	377	404
350	14	356	369	399	412	422	450
400	16	406	420	457	472	484	508
450	18	458	472	517	532	539	573
500	20	508	532	567	582	594	628
600	24	610	626	672	689	700	734

Remark; ×: Not applicable

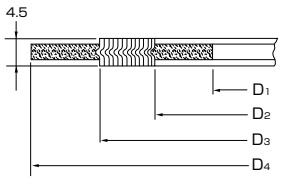

■Applicable standard for spiral gasket

Nominal size		Tomoe special			Standard gasket		
mm	inch	JIS 10K	JIS 16K JIS 20K	ANSI 125/150Lb	JIS 10K	JIS 16K JIS 20K	ANSI 125/150Lb
80	3	○	○	○	×	×	○
100	4	○	○	○	×	×	○
125	5	○	○	○	×	×	○
150	6	○	○	○	×	×	○
200	8	○	○	○	×	×	○
250	10	○	○	○	×	×	○
300	12	○	○	○	×	×	○
350	14	○	○	○	×	×	○
400	16	○	○	○	×	×	○
450	18	○	○	○	×	×	○
500	20	○	○	○	×	×	○
600	24	○	○	○	×	×	○

Remark 1: ○: Applicable, ×: Not applicable
Remark 2: In case a minute leakage of gas (less than 100PPm) becomes a problem, please inquire of our business charge.

302A Applicable standard for standard piping gasket

Nominal size		Max.allowable inside diameter (D)	Joint sheet or RPTFE solid gasket (t≦2mm)					PTFE mold type gasket VALQUA or NICHIAS				
mm	inch		JIS 5K	JIS 10K	JIS 16K JIS 20K	ANSI 125/150Lb	JPI 150Lb	JIS 5K	JIS 10K	JIS 16K JIS 20K	ANSI 125/150Lb	JPI 150Lb
80	3	97	×	○	○	○	○	×	○	○	○	○
100	4	124	×	○	○	○	○	×	○	○	○	○
125	5	151	×	○	○	○	○	×	○	○	○	○
150	6	178	×	○	○	○	○	×	○	○	○	○
200	8	227	×	○	○	○	○	×	○	○	○	○
250	10	282	×	○	○	○	○	×	○	○	○	○
300	12	331	×	○	○	○	○	×	○	○	○	○
350	14	362	○	○	○	○	○	○	○	○	○	○
400	16	414	○	○	○	○	○	○	○	○	○	○
450	18	468	○	○	○	○	○	○	○	○	○	○
500	20	518	○	○	○	○	○	○	○	○	○	○
600	24	619	○	○	○	○	○	○	○	○	○	○

Remark; ○: Applicable, ×: Not applicable

302A Piping Bolts and Nuts Sizes

Nominal size		JIS5K		JIS10K		JIS16K	
mm	inch	Long Bolts and Nuts	Setting Bolts	Long Bolts and Nuts	Setting Bolts	Long Bolts and Nuts	Setting Bolts
80	3	—	—	8-M16×145	—	8-M20×170	—
100	4	—	—	8-M16×145	—	8-M20×170	—
125	5	—	—	8-M20×170	—	8-M22×190	—
150	6	—	—	8-M20×170	—	12-M22×190	—
200	8	—	—	12-M20×170	—	12-M22×190	—
250	10	—	—	12-M22×190	—	12-M24×210	—
300	12	—	—	16-M22×190	—	16-M24×225	—
350	14	12-M22×210	—	16-M22×210	—	16-M30(P3)×245	—
400	16	16-M22×220	—	16-M24×235	—	16-M30(P3)×265	—
450	18	16-M22×230	※1	16-M24×250	4-M24×84×60	16-M30(P3)×280	4-M30(P3)× 95×65
					4-M24×58×50		4-M30(P3)× 73×50
500	20	16-M22×245	4-M22×80×50	16-M24×260	4-M24×90×60	16-M30(P3)×300	4-M30(P3)×105×65
			4-M22×60×50		4-M24×70×60		4-M30(P3)× 81×50
600	24	16-M24×280	4-M24×84×60	20-M30(P3)×300	4-M30(P3)×81×50	20-M36(P3)×345	4-M36(P3)×100×60
			4-M24×65×50		4-M30(P3)×65×50		4-M36(P3)× 82×50

Nominal size		JIS20K		ANSI150Lb, API/JPI150Lb	
mm	inch	Long Bolts and Nuts	Setting Bolts	Long Bolts and Nuts	Setting Bolts
80	3	8-M20×170	—	4-U5/8-11UNC×155	—
100	4	8-M20×170	—	8-U5/8-11UNC×155	—
125	5	8-M22×190	—	8-U3/4-10UNC×175	—
150	6	12-M22×190	—	8-U3/4-10UNC×175	—
200	8	12-M22×190	—	8-U3/4-10UNC×205	—
250	10	12-M24×210	—	12-U7/8- 9UNC×215	—
300	12	16-M24×225	—	12-U7/8- 9UNC×215	—
350	14	16-M30(P3)×260	—	12-U1 - 8UNC×240	—
400	16	16-M30(P3)×280	—	16-U1 - 8UNC×255	—
450	18	16-M30(P3)×300	4-M30(P3)×105×65	16-U1 1/8- 8UN×280	—
			4-M30(P3)× 81×50		
500	20	16-M30(P3)×315	4-M30(P3)×110×60	16-U1 1/8- 8UN×295	4-U1 1/8- 8UN×105×50
			4-M30(P3)× 90×65		4-U1 1/8- 8UN× 80×50
600	24	20-M36(P3)×360	4-M36(P3)×108×60	16-U1 1/4- 8UN×340	4-U1 1/4- 8UN×100×50
			4-M36(P3)× 90×50		4-U1 1/4- 8UN× 90×50

※1 Flange tapping is applicable, Please consult us for the further information.
Remark: Use SNB 7/S45C (A193 B7/A, 194 2H) SUS304/SUS304
For long bolt, use full thread bolt.
For hexagon nut, use heavy nut.
A metric screw should have 3 pitches if its nominal diameter exceeds M30.
A unified screw should have 8 threads per inch if its nominal diameter exceeds 1 inch.
Hexagon bolts (set bolts) are indicated with the retainer side on the up side and the stem side on down side.

Examples

Long bolts: 12 - M22 × 185
N M L

Setting bolts: 4 - M30 × 95 × 65
(Hexagon bolts)
N M L S

Long bolts and nuts (full thread)

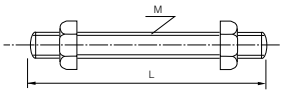
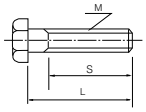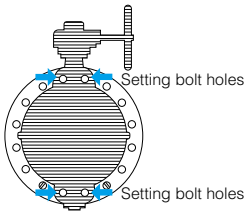
Setting bolts (Hexagon bolts)