P-17
CATALOG

# Vogt

# Pressure Seal Valves

For more information visit www.vogtvalves.com


ISSUED 07/2018 revision 01


# Vogt Valves
# A History in the Making

In the late 1890s, Vogt pioneered the early development of ammonia absorption refrigeration systems that made artificial ice. This business, plus Vogt's fledgling boiler business,
created an internal need for quality valves that initiated Vogt's early entry into the valve manufacturing business.
The early reputation of Vogt's quality valves and rapidly growing petroleum processing industry created an outside demand that would firmly establish Vogt in the mass production of high-quality forged steel valves.
For more than 100 years, Vogt's leadership has been evident in the production of forged steel gate, globe, angle and check valves in most popular materials, trims and bonnet configurations.
Today, Vogt valves support a worldwide network of distributors with access to the world's largest capability for manufacturing of forged steel valves.

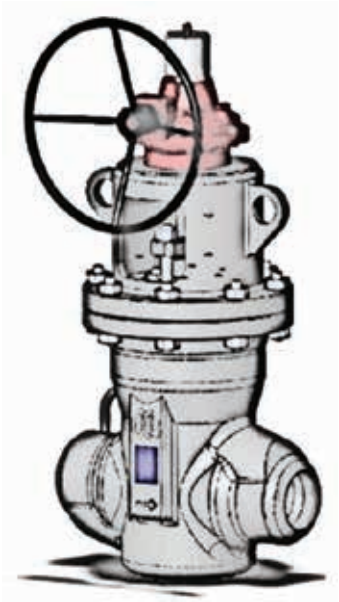

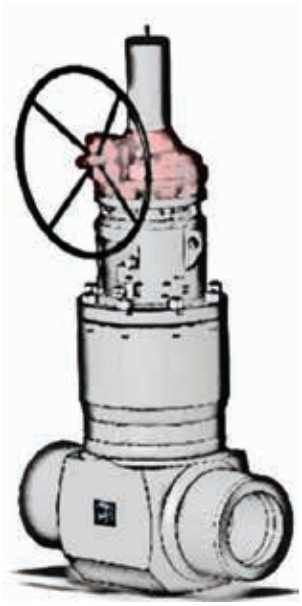

**VOGT OFFERS FORGED STEEL PRESSURE SEAL VALVES**
Class 900 to Class 4500 for the Oil & Gas, Power and Petrochemical Industries.

**FORGED PRESSURE SEAL VALVES ARE PREFERRED FOR:**
- Severe Service
- Higher reliability
- Stringent leakage rate
- Service to nominal pressure up to class 4500#

**AVAILABLE CONFIGURATION:**
- Flexible Wedge Gate
- Parallel Slide Gate
- T Pattern Globe
- Y Pattern Globe
- Swing Check
- Tilting Check
- Stop Check

**MATERIALS:**
Carbon steel: A105 – LF2
Stainless steel:
F304 – F316 – F321H – F347H
Low alloyed material: F1 – F5 – F11 – F22 – F9 – F91 – F92
Nickel based: 825 – 625 – Hastelloy® C276 – Hastelloy® C22

| DESIGN AND MANUFACTURING STANDARDS | |
|---|---|
| API 600 | Steel Gate Valves Flanged and Butt-welding Ends, Bolted Bonnets |
| API 623 | Steel Globe Valves-Flanged and Butt welding Ends, Bolted Bonnets |
| API 594 | Check valves: Flanged, Lug, Wafer and Butt welding |
| ASME B16.5 | Pipe flanges and flanged fittings ISO5210 [NPS ½ through NPS 24] |
| ASME B16.10 | Face to face and end to end dimensions of valves |
| ASME B16.25 | Butt-welding ends |
| ASME B16.34 | Valves-flanged threaded and welding end |

# TECHNOLOGY & QUALITY

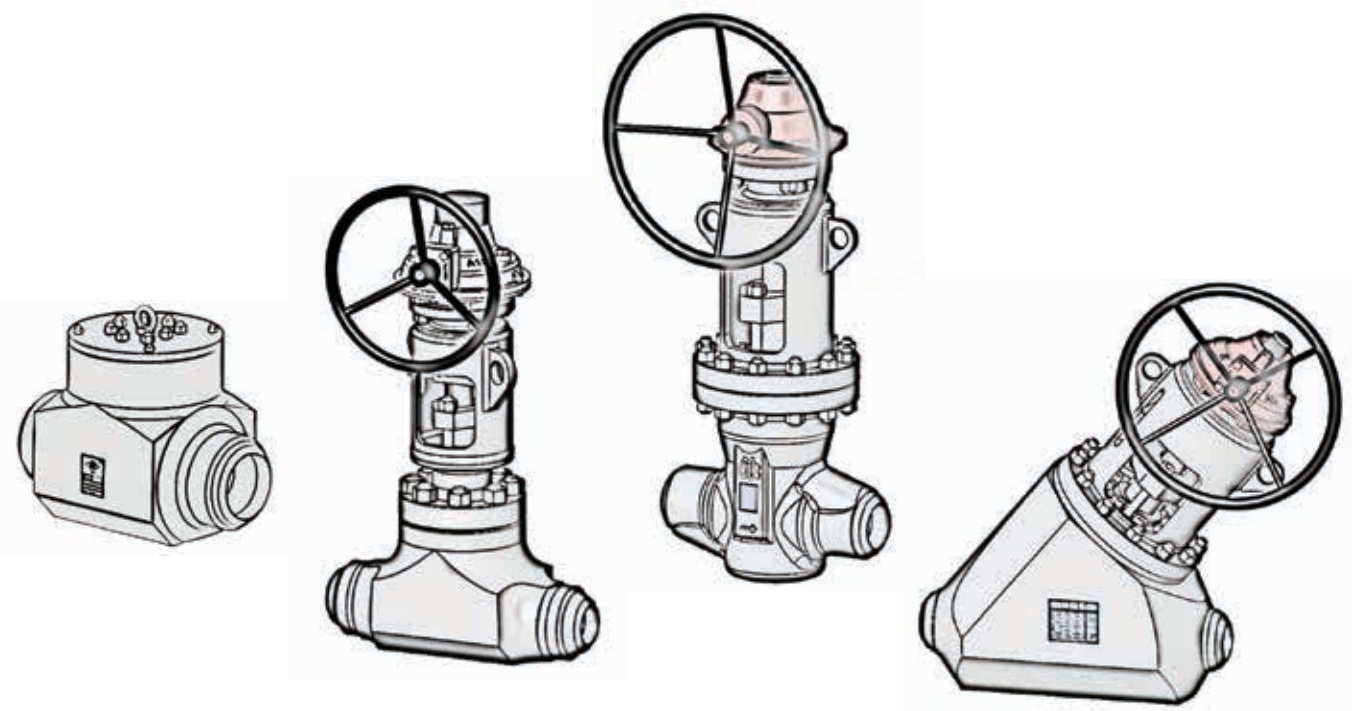

**QUALITY ASSURANCE**
Our activities are organized in accordance to procedures qualified to ISO 9001:2015 TÜV süd

| DESIGN AND MANUFACTURING STANDARDS | |
|---|---|
| API 624 | Fugitive emissions testing |
| API 622 | Type testing of process valve packing for fugitive emissions |
| API 6FA | Specification for fire test for valves |
| API 607 | Fire Safe for quarter turn valves and valves equipped with non metallic seats |
| ISO 15848-1 & 2 | Fugitive emissions testing for valve stem seal and body joint |
| NACE MR01.75 / ISO15156 | Petroleum petrochemical and natural gas industries, materials for use in H2S containing environments oil and gas production |

# PRODUCT LINE

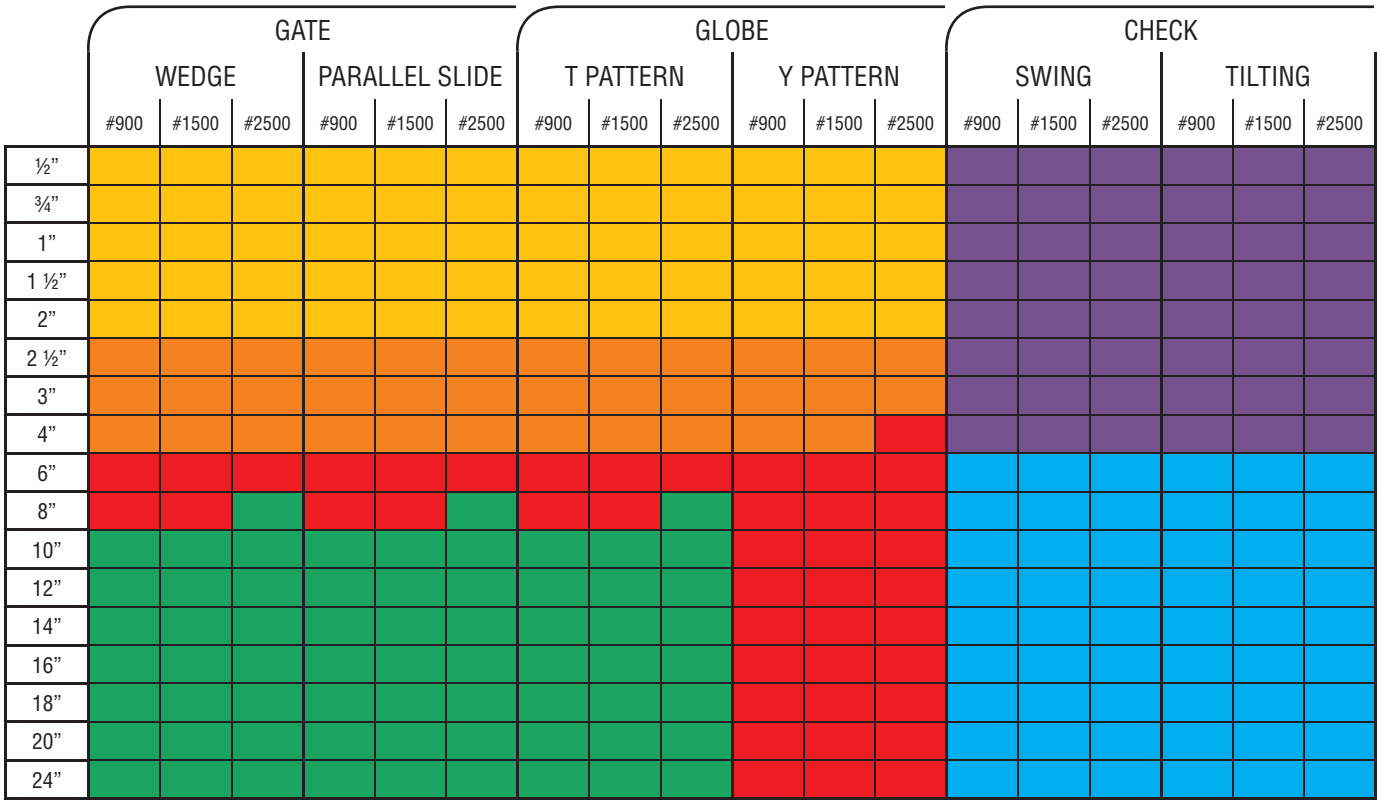


Larger size details available on request • Class 4500 details available on request

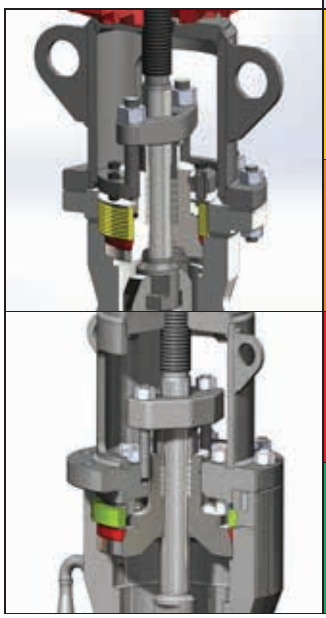

| GATE | GLOBE | CHECK |
|---|---|---|
| **TBP** - Threaded Body - one forged piece with Pillars | | **TB** - Threaded Body one forged piece |
| **TBY** - Threaded Body - one forged piece with Yoke | | |
| **SR1** - Segmented ring - one forged piece with Yoke | | **SR** - Segmented ring one forged piece |
| **SR2** - Segmented ring - two forged piece with Yoke | | |

Weight figures are relevant to BW end valves. For dimensions and weights in larger sizes or flanged valves consult the factory.
Dimensions and weights are subject to change without notice.

# PRODUCT LINE

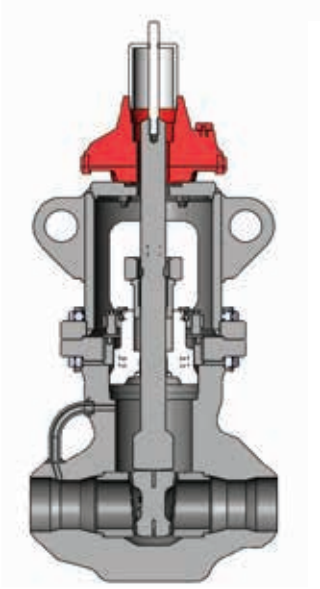
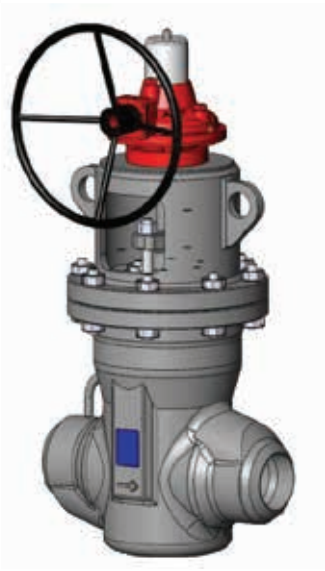

## GATE one piece

- Sizes ½” through 6”
- Closed Die Forging
- B16.34 design
- Class 900
- Class 1500
- Class 2500
- Wedge
- Parallel slide

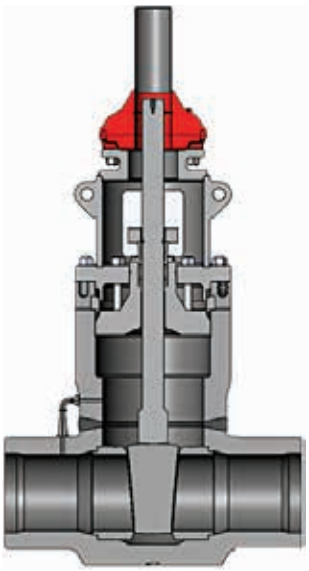


## GATE two pieces welded

- Sizes 8” through 24”
- Open Die Forging
- B16.34 design
- Class 900
- Class 1500
- Class 2500
- Wedge
- Parallel slide

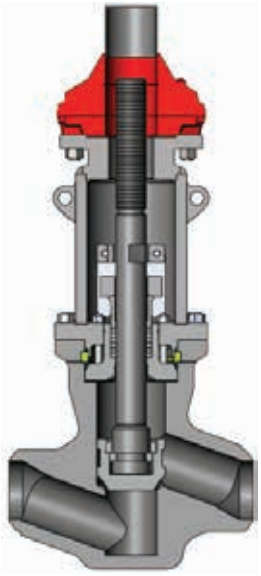
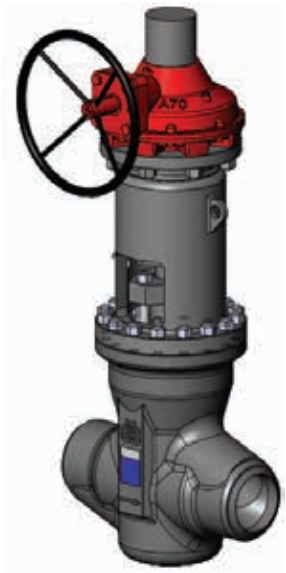

## GLOBE

- Sizes ½” through 24”
- Closed Die Forging
- B16.34 design
- Class 900
- Class 1500
- Class 2500
- T-Pattern
- Y-Pattern
- Stop Check

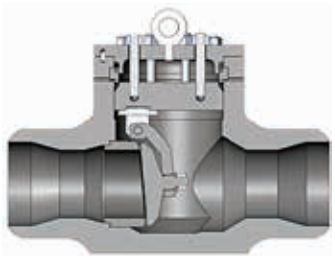


## CHECK

- Sizes ½” through 24”
- Closed Die Forging
- Open Die Forging
- B16.34 design
- Class 900
- Class 1500
- Class 2500
- Swing
- Tiliting disc

Weight figures are relevant to BW end valves. For dimensions and weights in larger sizes or flanged valves consult the factory.
Dimensions and weights are subject to change without notice.

**Overpressure Release**
Equalizer pipe, relief valve or drilled seat available to avoid body cavity overpressure.
Body cavity can be pressure equalized upstream by means of:

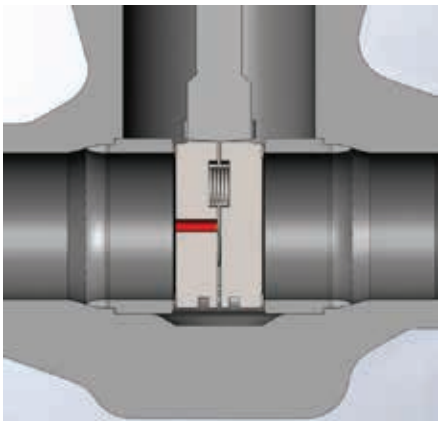

HOLE IN THE DISC

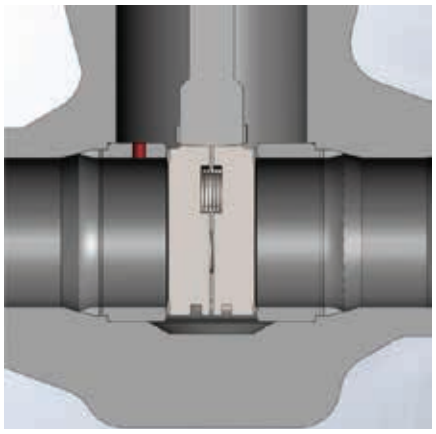

HOLE IN THE SEAT

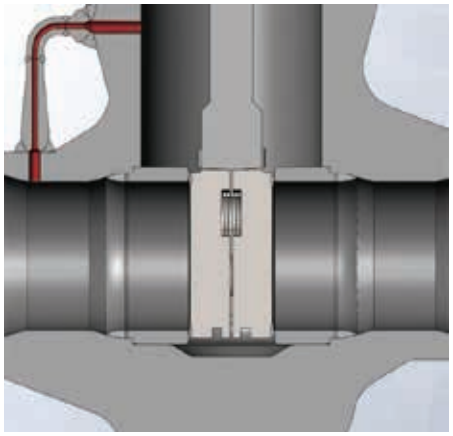

EQUALIZER PIPE

Overpressure relief configurations render the valve unidirectional.

**Main Body Seal**
Sealing material, composite or metallic, available in triangular shape as standard. Encapsulated rectangular shape available upon request.

**Bypass and Drain**
Bypass and drain are available with on/off globe or gate valves.
In case bypass is requested body cavity can still be pressure equalized or pressure relieved. With these configurations the valve will be bidirectional.

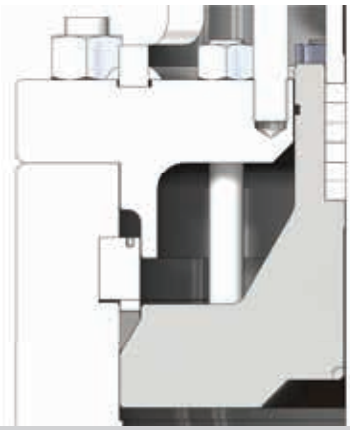

PRESSURE SEAL

BYPASS WITH ONE GLOBE VALVE + PRESSURE RELIEF

BYPASS WITH TWO GLOBE VALVES + EQUALIZER PIPE

# FEATURES

## Body Guided Design

Gate standard design has female machined guides in the body
Stem guided design without body grooves available on request

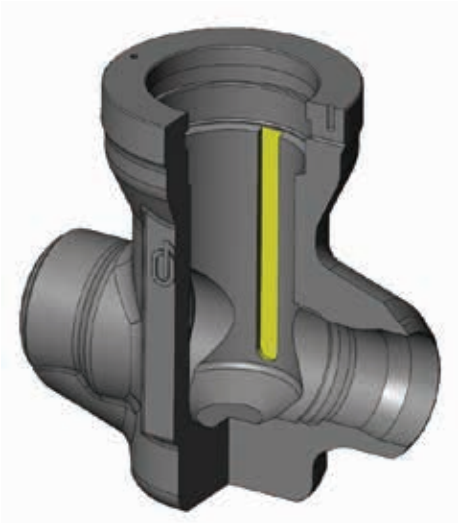

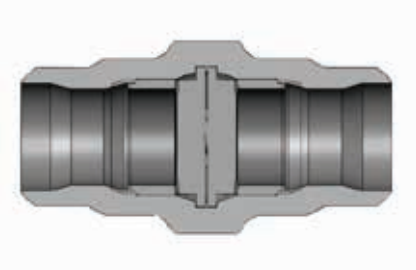

## Stem Guided Design

Stem guided by the bushing
Stem and bearing can be Chrome carbide coated

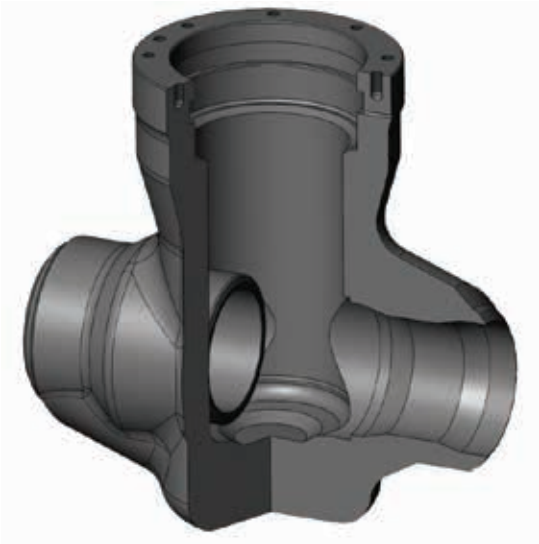

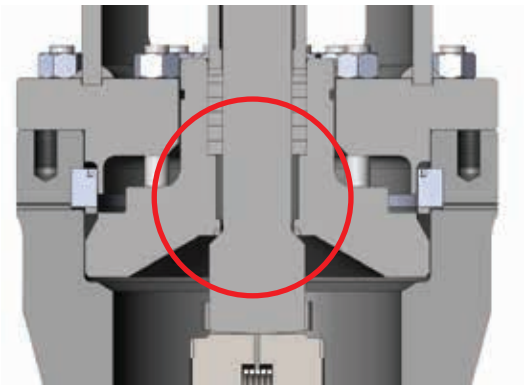

NOTE: Fully supported “pocket” design available

**Choice of Operators**
Manual, Electric, Hydraulic Actuator, Pneumatic linear Standard operator interfaces connections are designed to ISO5210

BEVEL GEARBOX

ELECTRIC ACTUATOR

HYDRAULIC ACTUATOR

PNEUMATIC LINEAR ACTUATOR

In consideration of the high number of turns required to operate large size valves, Vogt suggests use of an actuator to minimize operating or stroke time.

Double start stem design available to decrease operating time.

Actuator flanges are standardized to ISO 5210 mounting interfaces, allowing interchangeability at any time.

On wedge configuration gear and actuators can be supplied with high temp stem expansion compensator.

## DESIGN VERIFICATON

Finite Element Analysis is performed on all designs to evaluate the product performance in simulated min./max. service conditions. Computational Fluid Dynamics calculations and 3D solid design analysis are executed in house.
Design analysis is performed in addition to code to mitigate stress and or fatigue introduced by temperature/pressure, maximize flow, minimize erosion and optimize each component part.

## DESIGNED BY ANALYSIS AND DESIGNED TO CODE


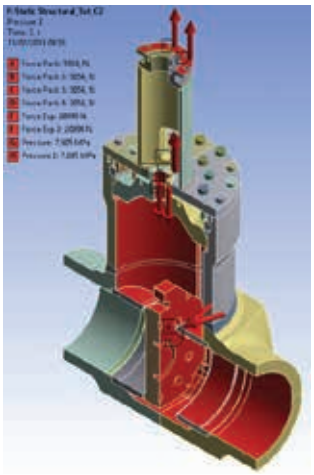
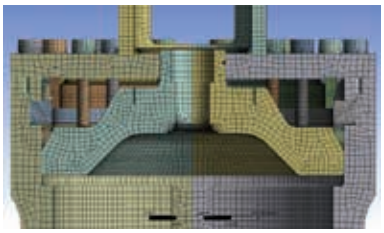
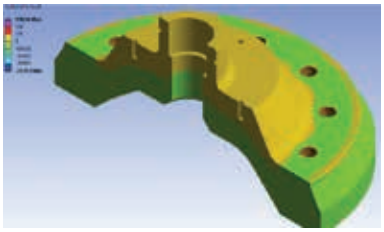
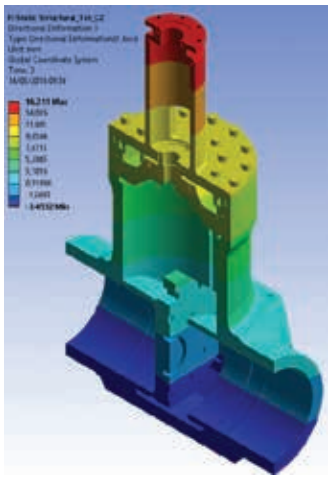

## IN PROCESS QUALITY CONTROL

Forgings up to 50 tons are machined to final shape in any alloyed steel material; strict surveillance of machining tolerances ensure proper mating of parts during assembly. Two piece bodies are full penetration welded with post weld heat treatment and 100% radiographic inspection as standard. All other welding activities are inspected using UT or RX. All component parts are inspected in one of our laboratories, by our NDE technicians and/or our QA/QC level II/III inspectors to guarantee the highest level of reliability.

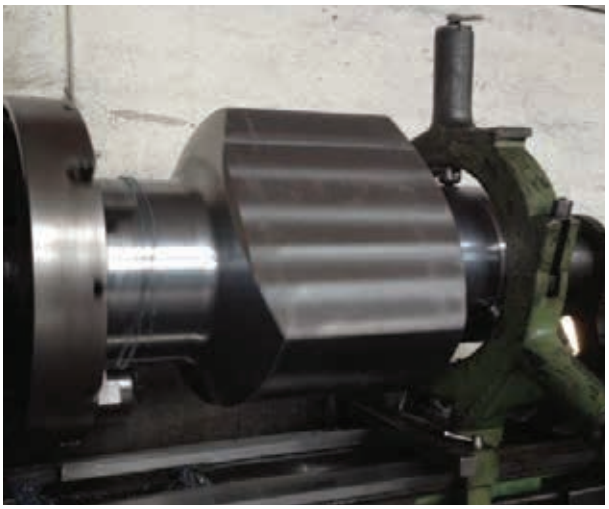


# WEDGE GATE VALVES
# PARALLEL SLIDE GATE VALVES

## GATE

| | WEDGE | | | PARALLEL SLIDE | | |
|---|---|---|---|---|---|---|
| | #900 | #1500 | #2500 | #900 | #1500 | #2500 |
| ½” | | | | | | |
| ¾” | | | | | | |
| 1” | | | | | | |
| 1 ½” | | | | | | |
| 2” | | | | | | |
| 2 ½” | | | | | | |
| 3” | | | | | | |
| 4” | | | | | | |
| 6” | | | | | | |
| 8” | | | | | | |
| 10” | | | | | | |
| 12” | | | | | | |
| 14” | | | | | | |
| 16” | | | | | | |
| 18” | | | | | | |
| 20” | | | | | | |
| 24” | | | | | | |

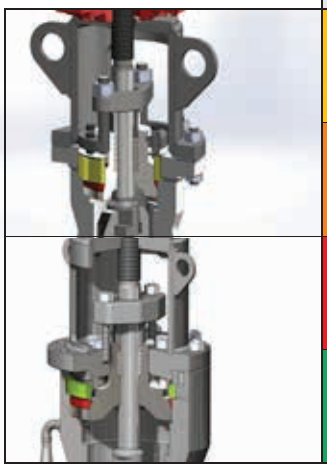

| GATE |
|---|
| **TBP** - Threaded Body - one forged piece with Pillars |
| **TBY** - Threaded Body - one forged piece with Yoke |
| **SR1** - Segmented ring - one forged piece with Yoke |
| **SR2** - Segmented ring - two forged piece with Yoke |

# WEDGE GATE VALVES
# PARALLEL SLIDE GATE VALVES

| | |
|---|---|
| **Body Bonnet Construction** | Pressure Seal |
| **Body Feature** | Forged closed die or open die |
| **Body Assembly** | 1 integral or 2 piece with full penetration weld |
| **ASME Class** | 900, 1500, 2500, 4500 details available on request |
| **Bore Construction** | Full Bore According to ASME B16.34 |
| **Face to Face** | According to ASME B16.10 Short Pattern |
| **Valve Ends** | Butt Weld according to ASME B16.25.<br>Flanged valves details available on request |
| **Gate Design** | Wedge or parallel slide |

Gate valves are available in two different designs:

- Flexible Wedge (Rigid wedge on request)
- Parallel Slide (Spring energized)

Both gates are guided into the body by integral ribs or guides to avoid any rotation and keep aligned during the stroke.

Seats are pressed up to 2” and seal welded above up to 24”.

**Flexible Wedge**

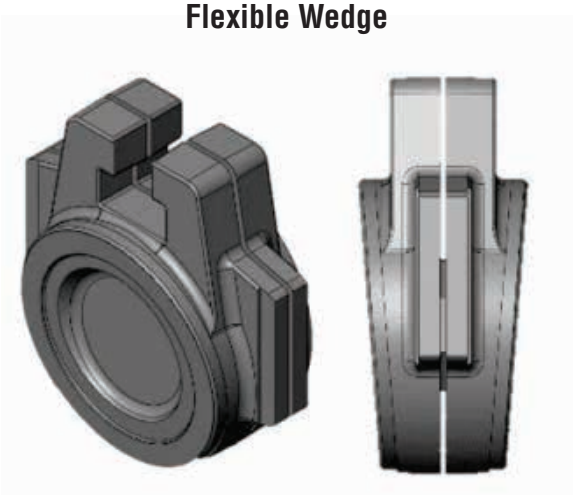

One piece forged construction

**Parallel Gate**

Two pieces forged construction

# WEDGE PARALLEL - PS - TBP

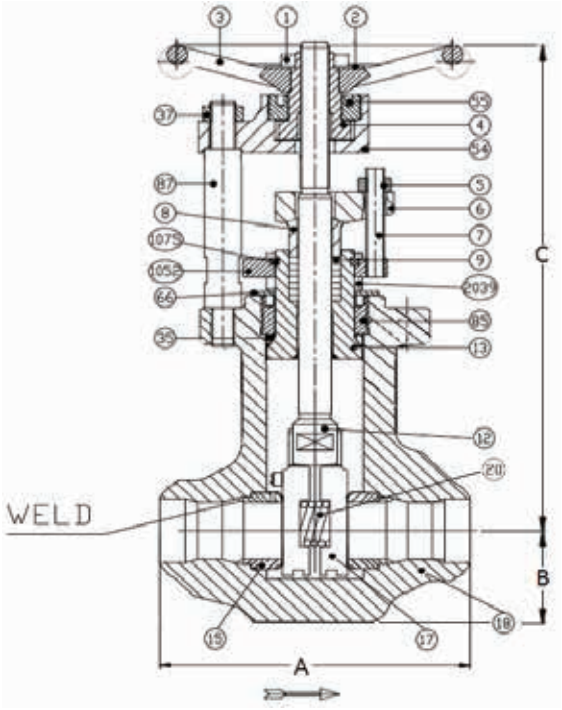


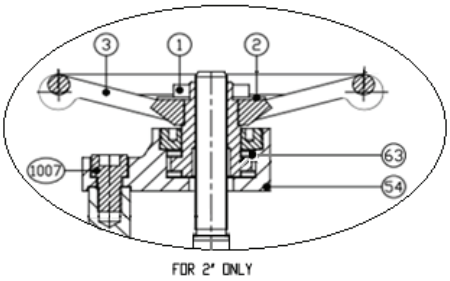


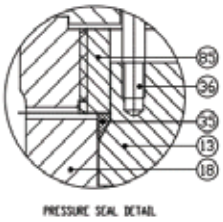


| |
|---|
| SEAL WELDED SEAT RING |
| BUTT WELDING ENDS ACCORDING TO ASME B16.25 |
| DESIGN ACCORDING TO ASME B16.34 |
| END TO END ACCORDING TO ASME B16.10 SHORT PATTERN |

| DESCRIPTION | | MATERIAL SPECIFICATION | | | |
|---|---|---|---|---|---|
| | | ASTM A105N | ASTM A182 F11 | ASTM A182 F22 | ASTM A182 F91 |
| 1 | WHEEL NUT | CARBON STEEL | | | |
| 2 | NAMEPLATE | AISI 316 | | | |
| 4 | YOKE NUT | AISI 416 | | | |
| 5 | GLAND NUT | ASTM A194 2H | ASTM A194 Gr.7 | | |
| 6 | GLAND FLANGE | ASTM A105 | | | |
| 7 | GLAND STUD | ASTM A193 B7 | ASTM A193 B16 | | |
| 8 | GLAND | ASTM A479 410 | | | |
| 9 | PACKING | GRAPHITE | | | |
| 12 | STEM | ASTM A479 410 | | | ASTM A479 XM-19 |
| 13 | BONNET | ASTM A105N+STELLITE Gr.6 | ASTM A182 F11+STELLITE Gr.6 | ASTM A739 B22+STELLITE Gr.6 | ASTM A182 F91+STELLITE Gr.6 |
| 15 | SEAT RING | TRIM 5 | | | TRIM 16 |
| 17 | WEDGE PARALLEL | TRIM 5 | | | TRIM 16 |
| 18 | BODY | ASTM A105N | ASTM A182 F11 | ASTM A182 F22 Cl.3 | ASTM A182 F91 |
| 20 | SPRING DISC | ALLOY X-750 | | | |
| 35 | GASKET | S.S. 316 | | | |
| 66 | WASHER | ASTM A516 Gr.70 | | | |
| 3 | HANDWHEEL | CARBON STEEL | | | |
| 1007 | PILLAR BOLTS | ASTM A193 B7 | | | |
| 37 | PILLAR NUTS | ASTM A194 2H | | | |
| 85 | SCREWED RING | ASTM A479 410 | | | ASTM A479 XM-19 |
| 54 | YOKE FLANGE | ASTM A105N | | | |
| 55 | RING NUT YOKE | ASTM A479 410 | | | |
| 87 | PILLARS | ASTM A105 | | | |
| 2039 | BONNET BOLTS | ASTM A193 B8 | | | |
| 1052 | COUPLING FLANGE | ASTM A105 | | | |
| 1075 | SEGMENTED RING | ASTM A182 F6 | | | |

Weight figures are relevant to BW end valves. For dimensions and weights in larger sizes or flanged valves consult the factory.
Dimensions and weights are subject to change without notice.

# WEDGE PARALLEL - PS - TBP

## CLASS 900

| SIZE | A | | B | | C | | W | |
|---|---|---|---|---|---|---|---|---|
| | mm | Inch | mm | Inch | mm | Inch | Kg | Lbs |
| ½” | 140 | 5.51 | 40 | 1.57 | 248 | 10 | 8 | 19 |
| ¾” | 140 | 5.51 | 45 | 1.77 | 273 | 11 | 13 | 29 |
| 1” | 140 | 5.51 | 50 | 1.97 | 289 | 12 | 16 | 37 |
| 1 ½” | 178 | 7.01 | 55 | 2.17 | 402 | 16 | 27 | 61 |
| 2” | 216 | 8.50 | 60 | 2.36 | 351 | 14 | 27 | 61 |

## CLASS 1500

| SIZE | A | | B | | C | | W | |
|---|---|---|---|---|---|---|---|---|
| | mm | Inch | mm | Inch | mm | Inch | Kg | Lbs |
| ½” | 150 | 5.91 | 43 | 1.69 | 268 | 11 | 9 | 22 |
| ¾” | 178 | 7.01 | 60 | 2.36 | 295 | 12 | 15 | 34 |
| 1” | 180 | 7.09 | 60 | 2.36 | 299 | 12 | 17 | 39 |
| 1 ½” | 235 | 9.25 | 60 | 2.36 | 356 | 14 | 30 | 68 |
| 2” | 216 | 8.50 | 70 | 2.76 | 357 | 15 | 30 | 68 |

## CLASS 2500

| SIZE | A | | B | | C | | W | |
|---|---|---|---|---|---|---|---|---|
| | mm | Inch | mm | Inch | mm | Inch | Kg | Lbs |
| ½” | 150 | 5.91 | 56 | 2.20 | 273 | 11 | 17 | 39 |
| ¾” | 150 | 5.91 | 56 | 2.20 | 299 | 12 | 19 | 44 |
| 1” | 210 | 8.27 | 60 | 2.36 | 309 | 13 | 27 | 61 |
| 1 ½” | 235 | 9.25 | 70 | 2.76 | 356 | 14 | 29 | 66 |
| 2” | 279 | 10.98 | 75 | 2.95 | 407 | 17 | 47 | 104 |

One single piece - closed die forging | Threaded body with pillars

Weight figures are relevant to BW end valves. For dimensions and weights in larger sizes or flanged valves consult the factory.
Dimensions and weights are subject to change without notice.

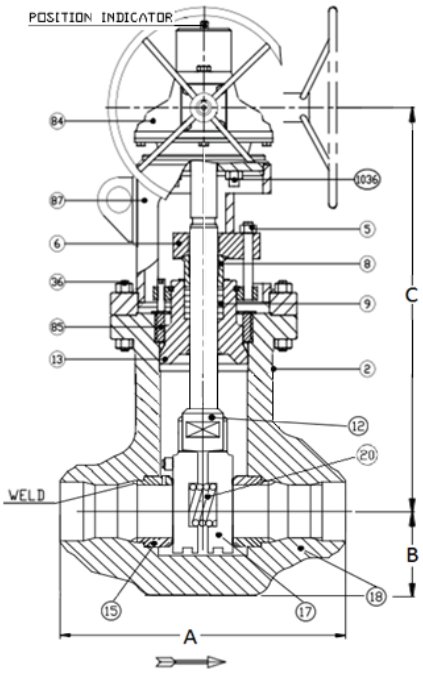


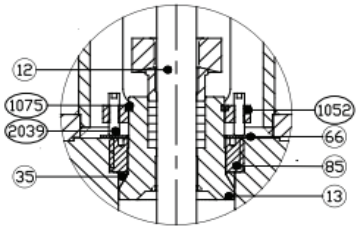


PRESSURE SEAL DETAIL

| |
|---|
| BUTT WELDING ENDS ACCORDING TO ASME B16.25 |
| DESIGN ACCORDING TO ASME B16.34 |
| SEAL WELDED SEATS |
| END TO END ACCORDING TO ASME B16.10 SHORT PATTERN |

| DESCRIPTION | | MATERIAL SPECIFICATION | | | |
|---|---|---|---|---|---|
| | | ASTM A105N | ASTM A182 F11 | ASTM A182 F22 | ASTM A182 F91 |
| 2 | NAMEPLATE | AISI 316 | | | |
| 5 | GLAND STUD & NUT | ASTM A193 B7 / 2H | ASTM A193 B16 / Gr.7 | | |
| 6 | GLAND FLANGE | ASTM A105 | | | |
| 8 | GLAND | ASTM A479 410 | | | |
| 9 | PACKING | GRAPHITE | | | |
| 12 | STEM | ASTM A479 410 | | | ASTM A479 XM-19 |
| 13 | BONNET | ASTM A105N+STELLITE Gr.6 | ASTM A182 F11+STELLITE Gr.6 | ASTM A739 B22+STELLITE Gr.6 | ASTM A182 F91+STELLITE Gr.6 |
| 15 | SEAT RING | ASTM A105N+STELLITE Gr.6 | ASTM A182 F11+STELLITE Gr.6 | ASTM A739 B22+STELLITE Gr.6 | ASTM A182 F91+STELLITE Gr.6 |
| 17 | WEDGE PARALLEL | ASTM A105N+STELLITE Gr.6 | ASTM A182 F11+STELLITE Gr.6 | ASTM A739 B22+STELLITE Gr.6 | ASTM A182 F91+STELLITE Gr.6 |
| 18 | BODY | ASTM A105N | ASTM A182 F11 | ASTM A182 F22 Cl.3 | ASTM A182 F91 |
| 20 | SPRING | ALLOY X-750 | | | |
| 35 | GASKET | GRAPHITE + SS.316 | | | |
| 36 | Â STUD BOLTS/NUT | ASTM A193 B7 /2H | ASTM A193 B16 / Gr.7 | | |
| 66 | WASHER | CARBON STEEL | | | |
| 84 | BEVEL GEAR | DUCTILE IRON | | | |
| 85 | SCREWED RING | ASTM A182 F6A CL.2 | | | ASTM A182 FXM-19 |
| 87 | YOKE | ASTM A105 | | | |
| 1036 | STUDS FOR GEAR | ASTM A193 B7 / 2H | | | |
| 1052 | COUPLING FLANGE | ASTM A105 | | | |
| 1075 | SEGMENTED RING | ASTM A182 F6 | | | |
| 2039 | BONNET BOLTS | ASTM A193 B8 | | | |

Weight figures are relevant to BW end valves. For dimensions and weights in larger sizes or flanged valves consult the factory.
Dimensions and weights are subject to change without notice.

# WEDGE PARALLEL - PS - TBY

## CLASS 900

| SIZE | A | | B | | C | | W | |
|---|---|---|---|---|---|---|---|---|
| | mm | Inch | mm | Inch | mm | Inch | Kg | Lbs |
| 2 ½” | 254 | 10 | 65 | 2.56 | 412 | 17 | 41 | 92 |
| 3” | 305 | 12.01 | 85 | 3.35 | 464 | 19 | 79 | 174 |
| 4” | 356 | 14.02 | 115 | 4.53 | 526 | 21.1 | 137 | 303 |

## CLASS 1500

| SIZE | A | | B | | C | | W | |
|---|---|---|---|---|---|---|---|---|
| | mm | Inch | mm | Inch | mm | Inch | Kg | Lbs |
| 2 ½” | 254 | 10 | 65 | 2.56 | 382 | 16 | 38 | 85 |
| 3” | 305 | 12.01 | 95 | 3.74 | 485 | 20 | 88 | 194 |
| 4” | 406 | 15.98 | 120 | 4.72 | 567 | 22.7 | 159 | 352 |

## CLASS 2500

| SIZE | A | | B | | C | | W | |
|---|---|---|---|---|---|---|---|---|
| | mm | Inch | mm | Inch | mm | Inch | Kg | Lbs |
| 2 ½” | 330 | 12.99 | 75 | 2.95 | 407 | 17 | 49 | 110 |
| 3” | 368 | 14.49 | 95 | 3.74 | 490 | 20 | 91 | 201 |
| 4” | 457 | 17.99 | 120 | 4.72 | 608 | 24.4 | 198 | 436 |

One single piece - closed die forging | Threaded body with yoke

Weight figures are relevant to BW end valves. For dimensions and weights in larger sizes or flanged valves consult the factory.
Dimensions and weights are subject to change without notice.

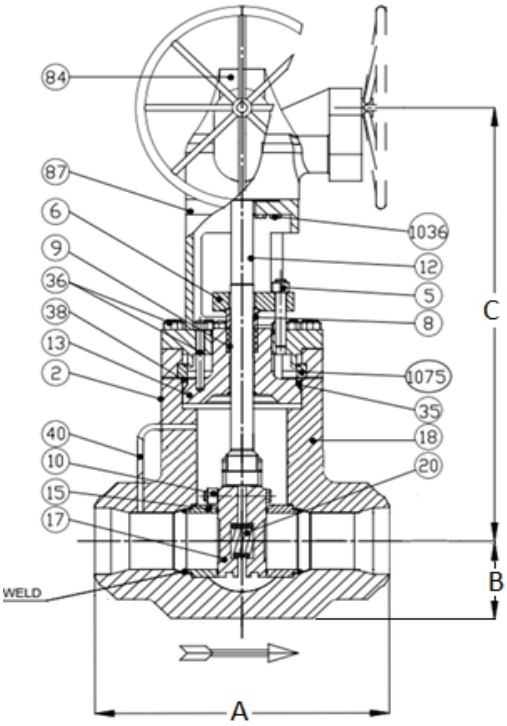


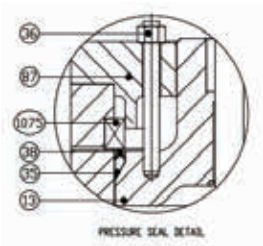


| |
|---|
| BUTT WELDING ENDS ACCORDING TO ASME B16.25 |
| DESIGN ACCORDING TO ASME B16.34 |
| SEAL WELDED SEATS |
| END TO END ACCORDING TO ASME B16.10 SHORT PATTERN |

| DESCRIPTION | | MATERIAL SPECIFICATION | | | |
|---|---|---|---|---|---|
| | | ASTM A105N | ASTM A182 F11 | ASTM A182 F22 | ASTM A182 F91 |
| 2 | NAMEPLATE | AISI 316 | | | |
| 5 | GLAND BOLT/NUT | ASTM A193 B7 / 2H | ASTM A193 B16 / Gr. 7 | | |
| 6 | GLAND FLANGE | ASTM A105 | | | |
| 8 | GLAND | ASTM A479 410 | | | |
| 9 | PACKING | GRAPHITE | | | |
| 10 | DISC BOLT | ASTM A193 B8 / ASTM A194 Gr.8 | | | |
| 12 | STEM | ASTM A479 410 | | | ASTM A479 XM-19 |
| 13 | BONNET | ASTM A105N+STELLITE Gr.6 | ASTM A182 F11+STELLITE Gr.6 | ASTM A739 B22+STELLITE Gr.6 | ASTM A182 F91+STELLITE Gr.6 |
| 15 | SEAT RING | ASTM A105N+STELLITE Gr.6 | ASTM A182 F11+STELLITE Gr.6 | ASTM A739 B22+STELLITE Gr.6 | ASTM A182 F91+STELLITE Gr.6 |
| 17 | WEDGE PARALLEL | ASTM A105N+STELLITE Gr.6 | ASTM A182 F11+STELLITE Gr.6 | ASTM A182 F22+STELLITE Gr.6 | ASTM A182 F91+STELLITE Gr.6 |
| 18 | BODY | ASTM A105N | ASTM A182 F11 | ASTM A182 F22 Cl.3 | ASTM A182 F91 |
| 20 | SPRING | ALLOY X-750 | | | |
| 35 | GASKET | GRAPHITE + SS.316 | | | |
| 36 | STUDS | ASTM A193 B7 | ASTM A193 B16 | | |
| 37 | STUD NUT | ASTM A194 2H | ASTM A194 Gr.7 | | |
| 38 | SPACER RING | ASTM A105 | | | F316 |
| 40 | EQUALIZER | ASTM A106 Gr.B | ASTM A335 P22 | | ASTM A335 P91 |
| 84 | BEVEL GEAR | DUCTILE IRON | | | |
| 87 | YOKE | ASTM A105 | | | |
| 1036 | STUD/NUT FOR GEAR | ASTM A193 B7 / ASTM A194 2H | | | |
| 1075 | SEGMENTED RING | ASTM A182 F6a CL.2 | | | ASTM A182 FXM-19 |

Weight figures are relevant to BW end valves. For dimensions and weights in larger sizes or flanged valves consult the factory.
Dimensions and weights are subject to change without notice.

# WEDGE PARALLEL - PS - SR1

## CLASS 900

| SIZE | A | | B | | C | | W | |
|---|---|---|---|---|---|---|---|---|
| | mm | Inch | mm | Inch | mm | Inch | Kg | Lbs |
| 6” | 508 | 20 | 145 | 5.71 | 718 | 29 | 264 | 583 |
| 8” | 660 | 25.98 | 205 | 8.07 | 803 | 32 | 539 | 1189 |

## CLASS 1500

| SIZE | A | | B | | C | | W | |
|---|---|---|---|---|---|---|---|---|
| | mm | Inch | mm | Inch | mm | Inch | Kg | Lbs |
| 6” | 559 | 22.01 | 165 | 6.50 | 692 | 28 | 302 | 667 |
| 8” | 771 | 27.99 | 200 | 7.87 | 834 | 33 | 621 | 1370 |

## CLASS 2500

| SIZE | A | | B | | C | | W | |
|---|---|---|---|---|---|---|---|---|
| | mm | Inch | mm | Inch | mm | Inch | Kg | Lbs |
| 6” | 610 | 24.02 | 145 | 5.71 | 814 | 33 | 508 | 1120 |
| 8” | - | - | - | - | - | - | - | - |

One single piece - closed die forging | Segmented ring design

Weight figures are relevant to BW end valves. For dimensions and weights in larger sizes or flanged valves consult the factory.
Dimensions and weights are subject to change without notice.

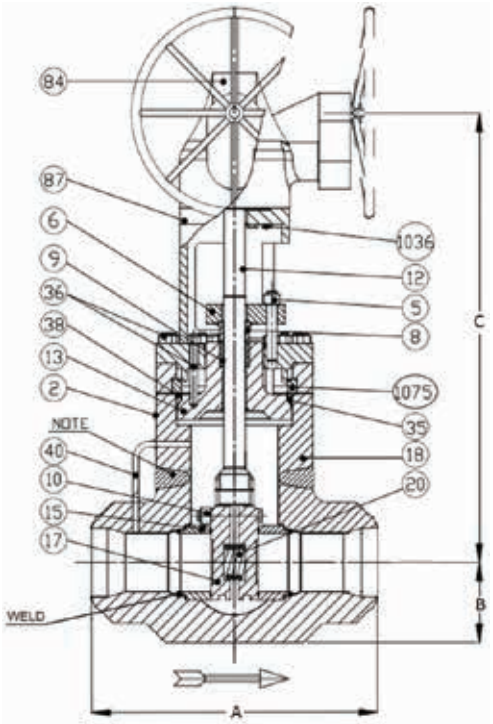


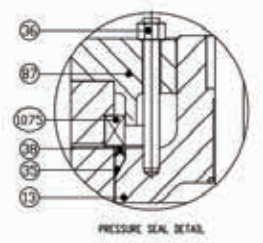


| |
|---|
| BUTT WELDING ENDS ACCORDING TO ASME B16.25 |
| SEAL WELDED SEATS |
| DESIGN ACCORDING TO ASME B16.34 |
| END TO END ACCORDING TO ASME B16.10 SHORT PATTERN |
| FULL PENETRATION WELD ACCORDING TO ASME SECT. IX |

| DESCRIPTION | | MATERIAL SPECIFICATION | | | |
|---|---|---|---|---|---|
| | | ASTM A105N | ASTM A182 F11 | ASTM A182 F22 | ASTM A182 F91 |
| 2 | NAMEPLATE | AISI 316 | | | |
| 5 | GLAND STUD/NUT | ASTM A193 B7 / 2H | ASTM A193 B16 / Gr.7 | | |
| 6 | GLAND FLANGE | ASTM A105 | | | |
| 8 | GLAND | ASTM A479 410 | | | |
| 9 | PACKING | GRAPHITE | | | |
| 10 | DISC BOLT | ASTM A193 B8 / Gr.8 | | | |
| 12 | STEM | ASTM A479 410 | | | ASTM A479 XM-19 |
| 13 | BONNET | ASTM A105N+STELLITE Gr.6 | ASTM A182 F11+STELLITE Gr.6 | ASTM A739 B22+STELLITE Gr.6 | ASTM A182 F91+STELLITE Gr.6 |
| 15 | SEAT RING | ASTM A105N+STELLITE Gr.6 | ASTM A182 F11+STELLITE Gr.6 | ASTM A739 B22+STELLITE Gr.6 | ASTM A182 F91+STELLITE Gr.6 |
| 17 | Â WEDGE PARALLEL | ASTM A105N+STELLITE Gr.6 | ASTM A182 F11+STELLITE Gr.6 | ASTM A182 F22+STELLITE Gr.6 | ASTM A182 F91+STELLITE Gr.6 |
| 18 | BODY | ASTM A105N | ASTM A182 F11 | ASTM A182 F22 Cl.3 | ASTM A182 F91 |
| 20 | SPRING | ALLOY X-750 | | | |
| 35 | GASKET | GRAPHITE + SS.316 | | | |
| 36 | STUD / NUT | ASTM A193 B7 / 2H | ASTM A193 B16 / Gr.7 | | |
| 38 | SPACER RING | ASTM A105 | | | F316 |
| 40 | EQUALIZER | ASTM A106 Gr.B | ASTM A335 P22 | | ASTM A335 P91 |
| 84 | BEVEL GEAR | DUCTILE IRON | | | |
| 87 | YOKE | ASTM A105 | | | |
| 1036 | STUD/NUT FOR GEAR | ASTM A193 B7 / 2H | | | |
| 1075 | SEGMENTED RING | ASTM A182 F6a CL.2 | | | ASTM A182 FXM-19 |

Weight figures are relevant to BW end valves. For dimensions and weights in larger sizes or flanged valves consult the factory.
Dimensions and weights are subject to change without notice.

# WEDGE PARALLEL - PS - SR2

## CLASS 900

| SIZE | A | | B | | C | | W | |
|---|---|---|---|---|---|---|---|---|
| | mm | Inch | mm | Inch | mm | Inch | Kg | Lbs |
| 8” | - | - | - | - | - | - | - | - |
| 10” | 787 | 30.98 | 195 | 7.68 | 874 | 35 | 803 | 1771 |
| 12” | 914 | 35.98 | 225 | 8.86 | 1117 | 44 | 1430 | 3153 |
| 14” | 991 | 39.02 | 250 | 9.84 | 1308 | 52 | 2002 | 4414 |
| 16” | 1092 | 42.99 | 270 | 10.63 | 1465 | 58 | 3172 | 6994 |
| 18” | 1219 | 47.99 | 300 | 11.81 | 1576 | 63 | 4128 | 9101 |
| 20” | 1321 | 52.01 | 335 | 13.19 | 1818 | 72 | 6228 | 13731 |
| 24” | 1549 | 60.98 | 400 | 15.75 | 2000 | 78.7 | 9133 | 20135 |

## CLASS 1500

| SIZE | A | | B | | C | | W | |
|---|---|---|---|---|---|---|---|---|
| | mm | Inch | mm | Inch | mm | Inch | Kg | Lbs |
| 8” | - | - | - | - | - | - | - | - |
| 10” | 864 | 34.02 | 210 | 8.27 | 1061 | 42 | 1017 | 2244 |
| 12” | 991 | 39.02 | 230 | 9.06 | 1268 | 50 | 1743 | 3844 |
| 14” | 1067 | 42.01 | 265 | 10.43 | 1414 | 56 | 2266 | 4996 |
| 16” | 1194 | 47.01 | 295 | 11.61 | 1591 | 63 | 3338 | 7361 |
| 18” | 1346 | 52.99 | 320 | 12.60 | 1687 | 67 | 4345 | 9579 |
| 20” | 1473 | 57.99 | 365 | 14.37 | 2036 | 81 | 6556 | 14454 |
| 24” | 1943 | 76.50 | 550 | 21.65 | 2202 | 86.69 | 10406 | 22942 |

## CLASS 2500

| SIZE | A | | B | | C | | W | |
|---|---|---|---|---|---|---|---|---|
| | mm | Inch | mm | Inch | mm | Inch | Kg | Lbs |
| 8” | 762 | 30 | 190 | 7.48 | 1081 | 43 | 1034 | 2280 |
| 10” | 914 | 35.98 | 245 | 9.65 | 1283 | 51 | 1925 | 4244 |
| 12” | 1041 | 40.98 | 278 | 10.94 | 1465 | 58 | 2750 | 6063 |
| 14” | 1118 | 44.02 | 330 | 12.99 | 1586 | 63 | 3113 | 6864 |
| 16” | 1245 | 49.02 | 368 | 14.49 | 1808 | 72 | 4290 | 9458 |
| 18” | 1397 | 55 | 435 | 17.13 | 1909 | 76 | 5170 | 11398 |
| 20” | 1473 | 57.99 | 485 | 19.09 | 2121 | 84 | 7150 | 15764 |
| 24” | 1943 | 76.50 | 670 | 26.38 | 2283 | 89.9 | 12100 | 26676 |

Two pieces welded - open die forging | Segmented ring design

Weight figures are relevant to BW end valves. For dimensions and weights in larger sizes or flanged valves consult the factory.
Dimensions and weights are subject to change without notice.

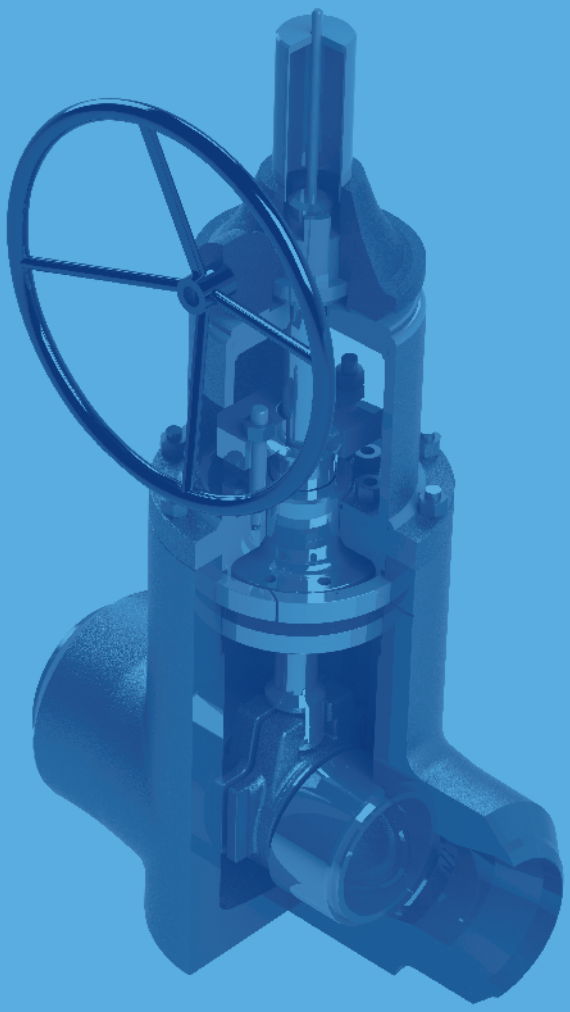

P-17/07.18 - phdit

**www.vogtvalves.com**

**A Member of OMB Valve Group**