CHECK VALVES

TECHNICAL CATALOGUE

GOODWIN
INTERNATIONAL LTD

Dual Plate

Axial

www.checkvalves.co.uk

Goodwin International
Company Overview

Goodwin International is globally recognised and approved for its design, manufacture and supply of Dual Plate Check Valves and Axial Check Valves to the world's hydrocarbon, energy and process industries.

Located in the heart of England in Stoke-on-Trent, Goodwin International is an engineering company of diverse skills, capabilities and products, and is a wholly owned subsidiary and member of the Goodwin PLC group of companies. The Group's core activities lie in engineering, refractories and investment powders and is trans-global in its activities.

The history and pedigree of Goodwin dates back to 1883. The initial company established in that year was its foundry, Goodwin & Sons. The foundry exists to this day operating under the name of Goodwin Steel Castings, and is one of the foremost nickel alloy foundries in Europe. It too is located in Stoke-on-Trent.

Publicly quoted on the London Stock Exchange, Goodwin PLC is family managed. Currently the group is headed by the fifth generation of the Goodwin family with members of the sixth generation now in management positions within its operating companies.

With over 1.5 million valves in service from over 35 years of supply to the global hydrocarbon, energy and process industries, Goodwin International Ltd provides a comprehensive level of customer service supported by a comprehensive representative network and its own overseas offices in Brazil, Dubai, Korea, China and Japan.

Goodwin International

Goodwin Steel Castings

Company Commitment...

To maintain an underlying commitment to engineering by investing in the design, manufacture and sale of technically advanced products.

The company's philosophy is to supply well designed products fit for purpose that are internationally competitive, whilst being superior to our competitors' be it by product performance or efficiency always ensuring the highest level of quality in everything we do.

Through investment in its people and markets the company aims to maintain its market position, to become a world leader in its technologies and provide exemplary customer service.

Matthew Goodwin
Managing Director

Pioneers in Check Valve Innovation

Goodwin International, by having two check valve products, the Goodwin Dual Plate Check and the Goodwin Non-Slam Axial Check Valve, can offer a cost effective solution to meet the vast majority of customer requirements and applications.

Dual Plate Check Valves

The Dual Plate Check Valve is widely accepted as the "check valve of choice" for new build hydrocarbon, energy and process projects by end-users and engineering contractors alike.

The Goodwin Dual Plate Check Valve is used in standard, regular, "bulk" applications where unwanted phenomena such as "slam" and "waterhammer" are not anticipated. It is available in different body styles to meet customers' specifications.

Axial Check Valves

The Non-Slam Axial Check Valve is the next level in check valve technology. It is specifically used for those critical /severe applications where reliability and high performance are an absolute necessity. Its speed of response and dynamic behaviour is such that unwanted phenomena such as "slam" and "waterhammer" are prevented from occurring.

The Goodwin Non-Slam Axial Check Valve is available in solid disc and ring disc designs.

The Goodwin Dual Plate and Non-Slam Axial Check Valves are complementary check valves enabling Goodwin International to address almost all check valve applications.

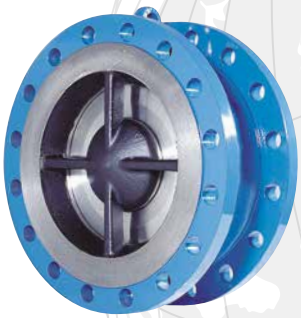

Contents

GOODWIN INTERNATIONAL LTD

Goodwin International:
Facilities & Resources

Goodwin International's Check Valve manufacturing plant in Stoke-on-Trent, England, comprises a well equipped CNC machine shop with full design, fabrication, inspection and test facilities. These facilities are complemented by sister company Goodwin Steel Castings Ltd, a world class foundry. It was the first steel foundry worldwide to be registered by the British Standards Institution to BS5750 (now BS EN ISO 9001) and is also accredited to ISO14001 and OHSAS 18001.

Specialising in producing high integrity pressure vessel castings from a few kilos to 18,000 kg in weight, the materials cast by Goodwin Steel Castings include carbon and low alloy steels, chrome steels, stainless steels, duplex stainless steels and super nickel alloys such as Hastelloy® and Alloy 625. Its ability to produce the special alloys is enhanced by its in-house 10 tonne AOD refining furnace.

Goodwin Steel Castings models all cast valve bodies using SOLIDWORKS® 3D Modelling. Casting methods are verified, i.e. method verification, using Magmasoft™ software.The Magmasoft™ program includes fluid dynamics, temperature profile, and x-ray simulation to predict where volumetric defects will occur in a given casting. Using this software enables defects to be "engineered out" by developing casting feeding and gating designs to ensure "right first time" production of high integrity castings. This optimisation process is a key feature of Goodwin Steel Castings' Quality Assurance System.

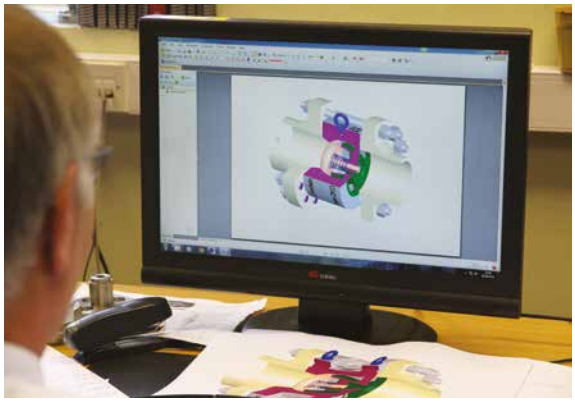

CAD facilities in Goodwin design office

12 tonne induction holding furnace at Goodwin Steel Castings

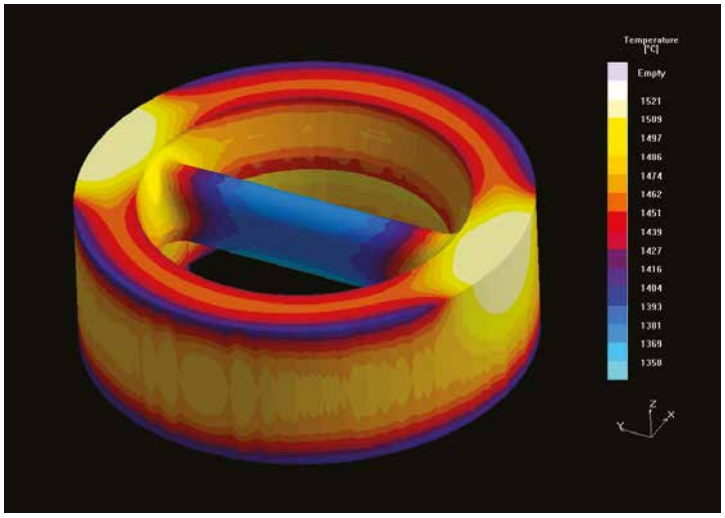

Magmasoft™ temperature profile

Super Duplex valve bodies with representative sized keel blocks undergoing heat treatment (From furnace to quenching in under 30 seconds)

Two station CNC vertical borer with live spindle and tool changer

Cryogenic test facility for helium leak testing

Goodwin International's BS EN ISO 9001 accredited design, machine, test and assembly bays cover some 30,000 m². The machine shop is equipped with 46 modern CNC machine tools, including robotic welding, which are the core of the valve production. These are further supplemented by a large number of conventional machine tools.

Valve design is carried out using 3D CAD and is verified on computers utilizing finite element analysis and Flow Simulation programs.

The test facilities include six hydraulic hydrostatic test rigs, the largest of which has a 2500 tonne hydraulic ram and can test valves up to 60". Cryogenic testing is also carried out on site where valves are submerged in liquid nitrogen at -196°C and leak tested with helium gas.

In addition to buying material from its own foundry, Goodwin International buys material on a global basis from a small number of foundries and forges with which it has long term association. All are ISO 9001 registered. To ensure its commitment to quality Goodwin has full-time in-country employees in the countries outside of Europe from which it sources to continually audit the quality of material sourced.

2500 tonne hydraulic test rig in Goodwin assembly bay

Twin pallet CNC machining centre with 60 tool changer

GOODWIN
INTERNATIONAL LTD

Goodwin International: Certification & Testing

A Quality Management System registered by BSI in accordance with BS EN ISO 9001 is maintained.

The Standard GOODWIN Check Valve features:-

- Designed, manufactured, assembled and tested in accordance with Quality Assurance System registered by BSI to BS EN ISO 9001.
- Designed and tested to API 594, API 6D or "manufacturer's standard" (dependent on product).
- All bodies and plates/discs certified to BS EN 10204 3.1 as a minimum.
- All new castings are sample approved by dimensional checks (wall thickness etc.) and radiography, 100% coverage to ASTM E446/E186, Level 2 minimum, or ultrasonic testing to ASTM A609, Level "A".
- Surface finish to MSS SP 55 on cast components.
- Traceablilty per melt (not batch of ingot) is maintained throughout all manufacturing processes for bodies, plates/discs and trim.
- All valves are hydrostatically tested (Shell and Seat) to API 598 with unique traceability to certification.
- Firetest approved and certified to ISO 10497, API 6FA & API 6FD for pressure classes ASME 150 to ASME 2500.
- Additional testing to be specified on the enquiry and Purchase Order.

Extensive in-house testing and laboratory facilities are available including:

- Hydrostatic Pressure Testing to 25000 psig (1725 barg)
- High Pressure Gas Testing to 20000 psig (1380 barg)
- Low Temperature (-46°C) and cryogenic temperature (-196°C) Pressure Testing
- High Temperature Pressure Testing to 550°C
- Helium Leak Testing (Mass Spectrometer)
- Tensile / Bend / Impact / Hardness Testing (ISO 17025 Accredited)
- Corrosion Testing
- Metallography
- Magnetic Particle
- Dye Penetrant
- Ultrasonic Examination
- Radiography
- Chemical Analysis
- Alloy Verification / Positive Material Identification (PMI)
- Co-ordinate Measuring Machines (CMM)
- Feritscope Verification
- Laser Measurement

Other examination Methods or Acceptance criteria to comply with the customer's own specification may be substituted if agreed with the Company at the time of quotation.

Radiography

Radiography is conducted in-house using Dual Voltage 6/9 MeV Linear Accelerator X-Ray machine with developing and viewing facilities.

Method	ASME V Art 2 or ASME B16.34 App 1
Options	100% of All castings 100% of 10% of castings Critical Areas* of All castings Critical Areas* of 10% of castings
Acceptance	ASME VIII Div 1 App 7 or ASME B16.34 App 1

*Critical Areas as defined by ASME B16.34

The Company's operators for all forms of Non-Destructive Testing are qualified to ASNT Level 2 or PCN Level 2.

Magnetic Particle / Dye Penetrant

Method MPI to ASME V Art 7 or ASME B16.34 App II
DPI to ASME V Art 6 or ASME B16.34 App III

Options
1. 100% of All castings/forgings
2. 100% of 10% of castings/forgings
3. 100% of all machined surfaces

Acceptance MPI to ASME VIII Div 1 App 7 or ASME B16.34 App II
DPI to ASME VIII Div 1 App 7 or ASME B16.34 App III

Magnetic Particle / Dye Penetrant

Ultrasonic Examination

Method ASME V Art 5 or ASME B16.34 App IV

Options
1. 100% of All castings/forgings
2. 100% of 10% of castings/forgings
3. Critical Areas* of All castings/forgings
4. Critical Areas* of 10% castings/forgings

Acceptance ASME B16.34 App IV

*Critical Areas as defined by ASME B16.34

Ultrasonic Examination

Chemical Analysis

- Routine chemical analysis by one of two optical emission spectrometers: Hilger 28 Channel Spectrometer and ARL 35 channel spectrometer
- Carbon, Sulphur, Nitrogen and Hydrogen determination by a combination of Leco and Eltra combustion analysers
- Oxygen determination by Celox direct measurement
- Portable PMI (Positive Material Identification) by XRF hand held analyser
- Typical material analysed:
  - Carbon/Low Alloy Steels/Chrome Steels
  - Stainless/Duplex/6Mo Steels
  - Nickel alloys
  - Cobalt alloys

Chemical Analysis

Corrosion Testing & Metallography

- Intercrystalline corrosion
- Strauss and Huey tests
- Crevice corrosion
- Pitting corrosion
- Typical Standards - ASTM G48, A262, G31, G36, A923
- Ferrite counting
- Phase checks
- Grain size/inclusion counts
- Macro and Micro photography
- Typical Standards - ASTM E562, E112, E45
- Scanning Electron Microscope

Corrosion Testing & Metallography

Goodwin International
Axial Check Valves - Types

Solid Disc
Type ZB

Size Range Pressure Range	DN25 to DN250 (1" to 10") ASME 150 - 2500, PN10 - 400, API 3000 - 20000
Temperature Range	-196°C to 550°C
Connection Types	Flanged, Buttweld End, Hub End
Face to Face	Goodwin Standard Long

Also available with API 6D Face to Face (ZD)

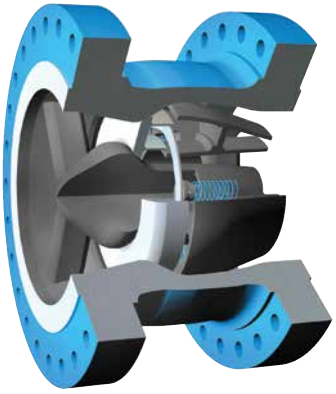

Ring Disc
Type NB
Radially Guided

Size Range Pressure Range	DN300 to DN2200 (12" to 88") ASME 150 - 2500, PN10 - 400, API 3000 - 20000
Temperature Range	-196°C to 550°C
Connection Types	Flanged, Buttweld End, Hub End
Face to Face	Goodwin Standard Long

Also available:
Type NK - Compact Face-to-Face
Type ND - API 6D Face-to-Face

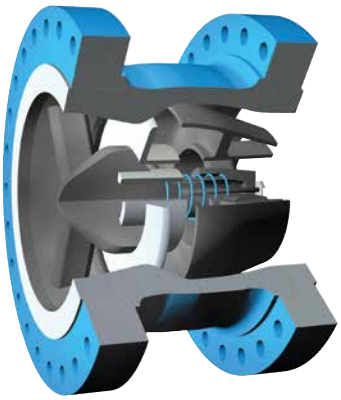

Ring Disc
Type NZ
Centrally Guided

Size Range Pressure Range	DN300 to DN2200 (12" to 88") ASME 150 - 2500, PN10 - 400, API 3000 - 20000
Temperature Range	-196°C to 550°C
Connection Types	Flanged, Buttweld End, Hub End
Face to Face	Goodwin Standard Long

Also available:
Type NC - Compact Face-to-Face
Type NA - API 6D Face-to-Face

Axial Check Valves
Technical Features & Benefits

Optimised Disc Designs

The Goodwin Non-Slam Axial Check Valve has two basic disc designs, the Solid Disc and the Ring Disc, depending on size of valve. The Ring Disc design itself is available in 2 designs: radially guided and centrally guided.

Solid Disc
Available in sizes 1" through to 10", the Goodwin Type Z valve is a solid disc and shaft type. The axial design allows for a streamlined flow path around the disc and diffuser providing high pressure recovery, thereby minimising pressure drop across the valve. A short stroke length provides the quick response required by a Non-Slam check valve.

Ring Disc
The radially guided/multi spring design, the Type N valve, supplied in sizes 12" and above, ensures that the disc remains light and responsive even in larger sizes. Mounted on a multiple helical spring and radial guide assembly, the disc moves freely without any frictional forces.

The centrally guided/single spring design, the Type NZ valve, supplied in sizes 12" and above, displays the same dynamic behaviour as the Type N as the disc stroke is identical and the friction negligible as the disc slides "balanced" on the guide bush.

With a flow path in both valves around and through the centre of the disc, the flow capacity in both valves is "best in class". Due to the excellent pressure recovery properties of the diffuser, the minimal pressure drop across the valves gives lifetime energy savings when compared to more conventional valve designs.

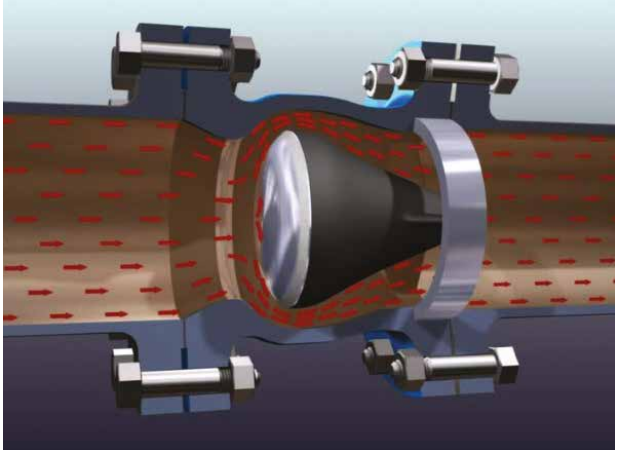

Solid Disc Flow Diagram

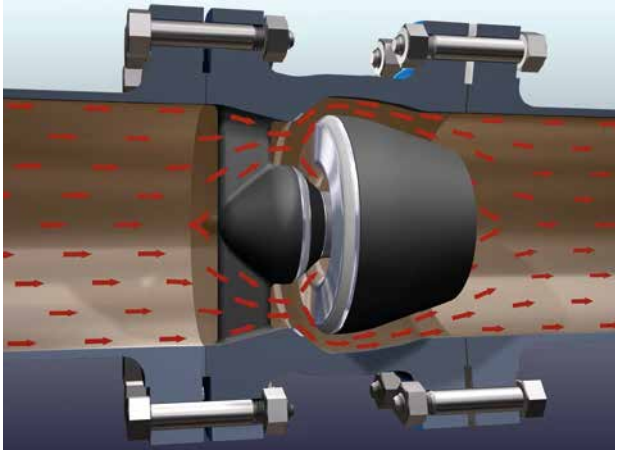

Ring Disc Flow Diagram

Dynamic Response Curve Comparison

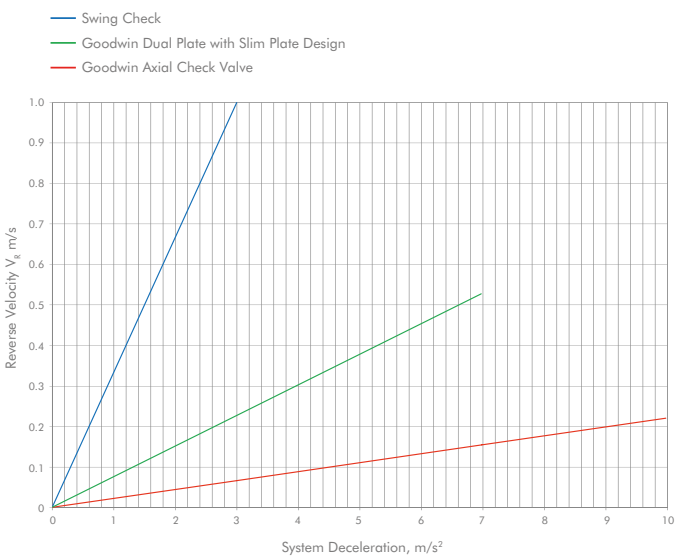

Non-Slam: Quick Response

Low weight discs, short stroke lengths and spring assistance combine to ensure that the Axial type check valve responds quickest to change in flow direction.

This fast response ensures reverse velocity cannot build up to a level that can damage pumps, pipes or related equipment. As pressure surges can occur when a valve is closed against a moving body of fluid, the quick closure results in a considerably lower pressure peak than with other types of check valve.

Axial Check Valves
Technical Features & Benefits

Low Pressure Loss

The streamlined internals of the axial check valve range allow for a turbulence free flow path around the disc in the Type Z valve or through and around the disc in the Type N valves.

The high capacity, smooth flow path results in low pressure drop across all of the Axial type valves with exceptionally low pressure drop in the ZB, the NB and NZ ranges.

Low pressure loss can be equated with energy savings in the plant or more throughput, making the axial type valve a competitive check valve solution when considering full lifecycle costs.

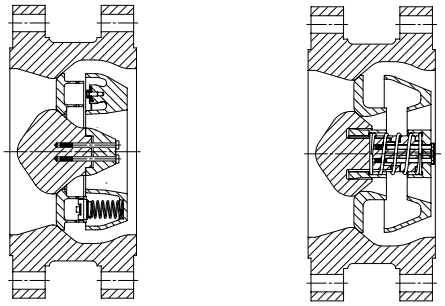

NKF NCF
Standard Short Face-to-Face

Space & Weight Savings

The short face-to-face dimensions of the NK/NC compact designs allow for installation in applications where space and weight are at a premium, such as offshore platforms and FPSOs.

The NK/NC types, with their reduced body length and consequent reduced weight, offer significant cost savings compared with the long pattern NB/NZ and ND/NA types. The savings in capital purchase costs are further complemented by low lifecycle cost afforded by the low pressure loss ring disc.

The NK/NC types are Goodwin's standard when supplying sizes 12" and larger and is available with Flanged, Wafer, Solid Lug, Hub End and Buttweld End connections.

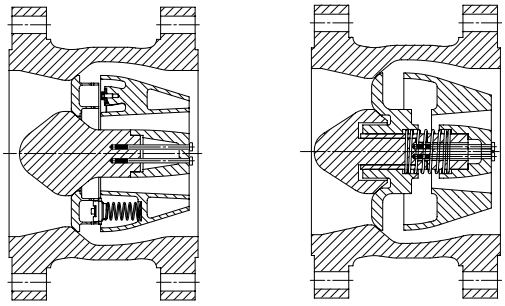

NBF NZF
Standard Face-to-Face

Choice of Face-to-Face Lengths

The Goodwin Axial Check Valves are available in three standard lengths.
NK* - Goodwin Standard Compact Face to Face
NB, ZB* - Goodwin Standard Long Face to Face
ND, ZD - API 6D Face to Face
* Types ZB and NK are Goodwin's standard offering, holding substantial stocks of components.

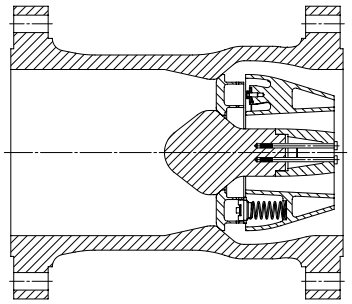

NDF
API 6D Face-to-Face

Maintenance Free

The Goodwin Axial Check Valve designs use no soft parts and are therefore inherently fire-safe. Also, as there are no wearing parts, it is maintenance free. The springs are sized according to the flow rates to ensure that the valves are in the fully open position during normal use. This minimises cycling of the spring, giving the valves a long design life without the need for regular maintenance.

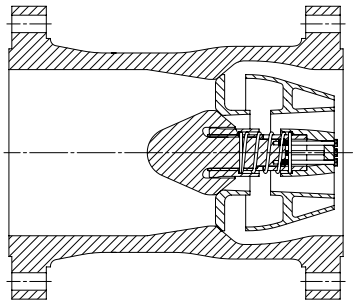

NAF
API 6D Face-to-Face

Axial Check Valve

Installation Between End Connections

Flanged
Type ZBF

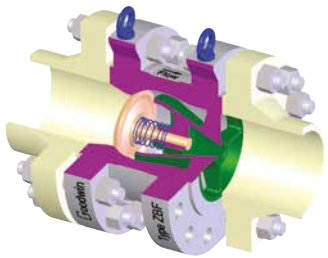

Flanged
Type NKF/(NCF)

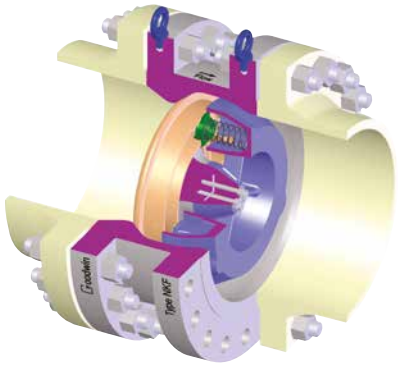

Hub-End
Type ZBH

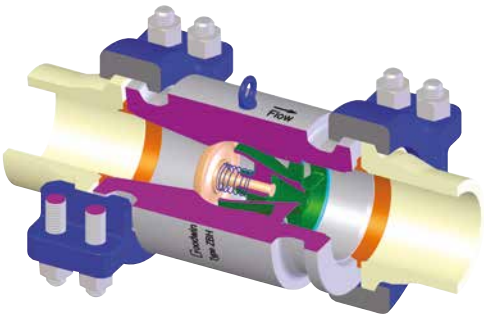

Hub End
Type NKH/(NCH)

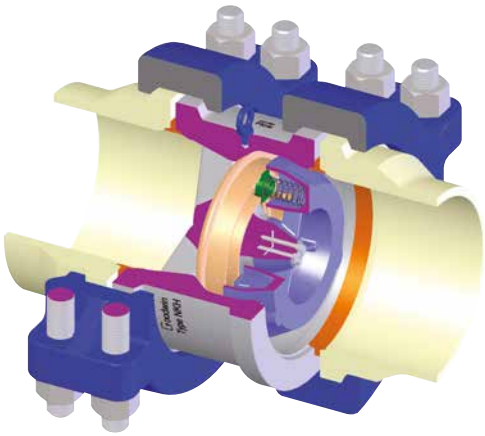

Buttweld End
Type ZBW

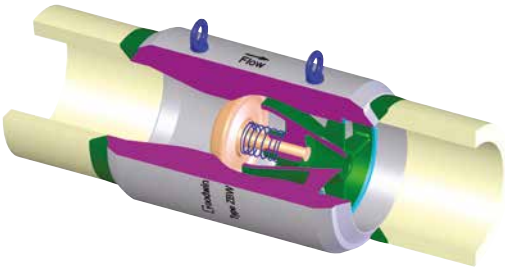

Buttweld End
Type NKW/(NCW)

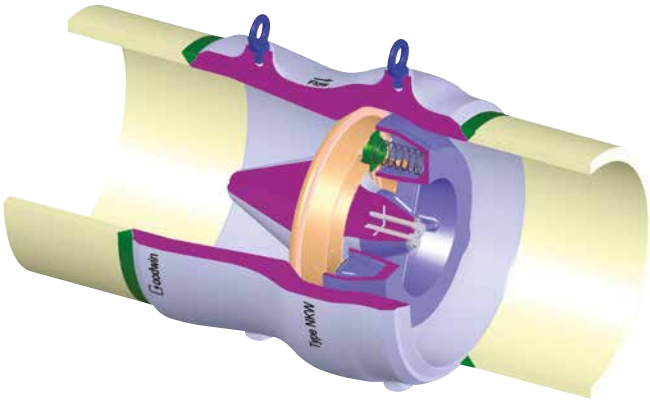

Axial Check Valves: Ordering Instructions

EXAMPLE

Type	Valve Size	Flange Standard	ASME/API/PN Pressure Rating		Body Material	Disc Material	Body Seat	Disc Seat	End Connection	Spring Torque	Spring Material	Wetted Parts	Flow Diffuser Material
NKF	14	-	015	-	C	S	U	U	R	2	Y	S	C

VALVE TYPE

SOLID DISC: TYPE Z (to 10") Goodwin Standard Long f/f	
ZBF	Flanged
ZBH	Hub Ended
ZBW	Buttweld End
ZBV	Compact flange
API 6D f/f	
ZDF	Flanged
ZDW	Buttweld End
ZXX	Special

VALVE SIZE

Inches:
For ASME, AWWA & API Standards

RING DISC: TYPE N (12" & above) Goodwin Standard Compact f/f		
NKO	Wafer	NCO
NKF	Flanged	NCF
NKS	Solid Lug	NCS
NKH	Hub Ended	NCH
NKW	Buttweld End	NCW
NKV	Compact flange	NCV
Goodwin Standard Long f/f		
NBF	Flanged	NZF
NBH	Hub Ended	NZH
NBW	Buttweld End	NZW
NBV	Compact flange	NZV
API 6D f/f		
NDF	Flanged	NAF
NDW	Buttweld End	NAW
NXX	Special	NXX

BODY, DISC & DIFFUSER MATERIAL

FIG	MATERIAL	SPECIFICATION CAST	SPECIFICATION FORGED
C	Carbon Steel	ASTM A216 WCB	ASTM A105
L	Low Temp Carbon Steel	ASTM A352 LCB	-
O	Low Temp Carbon Steel	ASTM A352 LCC	ASTM A350 LF2
D	High Temp Cr Mo Steel	ASTM A217 WC6	ASTM A182 F11-2
K	Low Alloy Steel	ASTM A487 GR 4C	-
E	410 Stainless Steel	ASTM A217 CA15	ASTM A182 F6
P	5% Cr Steel	ASTM A217 C5	ASTM A182 F5a
W	9% Cr Steel	ASTM A217 C12	ASTM A182 F9
G	Low Temp 13% Cr 4% Ni	ASTM A352 CA6NM	ASTM A182 F6NM
S	316 Stainless Steel	ASTM A351 CF8M	ASTM A182 F316
F	316L Stainless Steel	ASTM A351 CF3M	ASTM A182 F316L
Y	347 Stainless Steel (High Temp)	ASTM A351 CF8C	ASTM A182 F321
Q	22% Chrome Duplex	ASTM A890 4A or A995 4A	ASTM A182 F51
B	25% Chrome Super Duplex	ASTM A995 CD4MCuN	-
Z	25% Chrome Super Duplex	ASTM A890 6A or A995 6A	ASTM A182 F55
H	Alloy 825	ASTM A494 CU5MCuC	ASTM B564 N08825
I	Alloy 625	ASTM A494 CW6MC	ASTM B564 N06625
V	Avesta 254 SMO®	ASTM A351 CK3MCuN	ASTM A182 F44
U	Cobalt Alloy 6 / Stellite® 6	Cobalt Alloy 6 / Stellite® 6	-
T	Titanium	ASTM B367 C2	ASTM B381 F2 / B348 GR2
J	Hastalloy C276®	ASTM A494 CW12MW	-
M	Monel	ASTM A494-M35-2	ASTM B564 N04400
A	Nickel Aluminium Bronze	BS EN 1982 CC333G / ASTM B148 C95800	-
1	Chromium Molybdenum Steel	ASTM A217 GR WC9	ASTM A182 F22-3
2	3.5% Nickel Steel	ASTM A352 LC3	ASTM A350 LF3
3	304 Stainless Steel	ASTM A351 CF8	ASTM A182 F304
4	304L Stainless Steel	ASTM A351 CF3	ASTM A182 F304L
5	Alloy 20	ASTM A351 CN7M	ASTM B462 N08020
6	317 Stainless Steel	ASTM A351 CG8M	ASTM A182 317
7	Carbon Molybdenum Steel	ASTM A352 LC1	-
8	Ni Resist® Iron	ASTM A439 D2	-
9	Ductile Iron	ASTM A395	-
X	To Be Specified	TO BE SPECIFIED	-

Cast or Forged option is at manufacturer's discretion

FLANGE STANDARD

FIG	STANDARD
-	ASME B16.5
-	ASME B16.47 Series A (MSS SP 44)
B	ASME B16.47 Series B (API 605)
D	AWWA C207 Class D
E	AWWA C207 Class E
S	API 6A / ISO 10423
P	BS EN 1092 (PN)
J	JIS 2210
V	Norsok L-005

ASME/API/PN PRESSURE RATINGS

FIG	PRESSURE RATINGS
015	150
030	300
060	600
090	900
150	1500
250	2500
300	3000
500	5000
100	10000
XXX	15000
010	PN 10
016	PN 16
025	PN 25
040	PN 40
PXX	Special

BODY SEAT/DISC OVERLAY MATERIAL

FIG	MATERIAL	OPERATING TEMP RANGE * °F	°C
P	Same as Body / Disc	As Body / Disc	As Body / Disc
E	410 Stainless Steel	- 20 to 1000	- 29 to 538
S	316 Stainless Steel	- 425 to 1000	-254 to 538
F	316L Stainless Steel	-425 to 850	-254 to 455
G	17-4 PH	-40 to 800	-40 to 427
I	Alloy 625		
M	Monel 400	-321 to 900	-196 to 482
U	Cobalt Alloy 6 / Stellite® 6	-450 to 1500	-267 to 815
9	Cobalt Alloy 21 / Stellite 21®	-450 to 1500	-267 to 815
X	To Be Specified		

Resilient seats can be offered on request

END CONNECTION

FIG	CONNECTION
Q	Raised Face 3.2 µm max. Sprial Groove
R	Raised Face 3.2-6.3 µm Spiral Groove
S	Raised Face 6.3-12.5 µm Spiral Groove
F	Flat Face 3.2-6.3 µm Spiral Groove
G	Flat Face 6.3-12.5 µm Spiral Groove
E	Raised Face 3.2 µm max. Concentric Groove
D	Raised Face 3.2-6.3 µm Concentric Groove
C	Raised Face 3.2-12.5 µm Concentric Groove
A	Flat Face 3.2-6.3 µm Concentric Groove
Z	Flat Face 6.3-12.5 µm Concentric Groove
J	Ring Type Joint
H	Clamped End
W	Buttweld End
V	Compact Flange

SPRING TORQUE

-	Undefined
1	Spring No.1 (1.5m/s)
2	Spring No.2 (2.0 m/s)
3	Spring No.3 (2.5m/s)
4	Spring No.4 (3.0 m/s)
X	Special

SPRING MATERIAL

FIG	MATERIAL	RECOMMENDED MAX TEMP °F	°C
S	316 Stainless Steel	570	300
Y	Inconel X750®	1022	550
I	Inconel 625®	398	200
M	Monel K500®	500	260
L	Inconel 718®	1022	550
T	Titanium	662	350
E	Elgiloy	840	450
J	Hastelloy C276	750	400
X	To Be Specified		

WETTED PARTS*

FIG	MATERIAL
S	316 SS
F	316L SS
I	Alloy 625
W	347 SS
Y	321 SS
T	Titanium

*Manufacturers standard materials for Wetted parts. Other combinations available on request.

GOODWIN
INTERNATIONAL LTD

Types ZBF, NBF & NZF

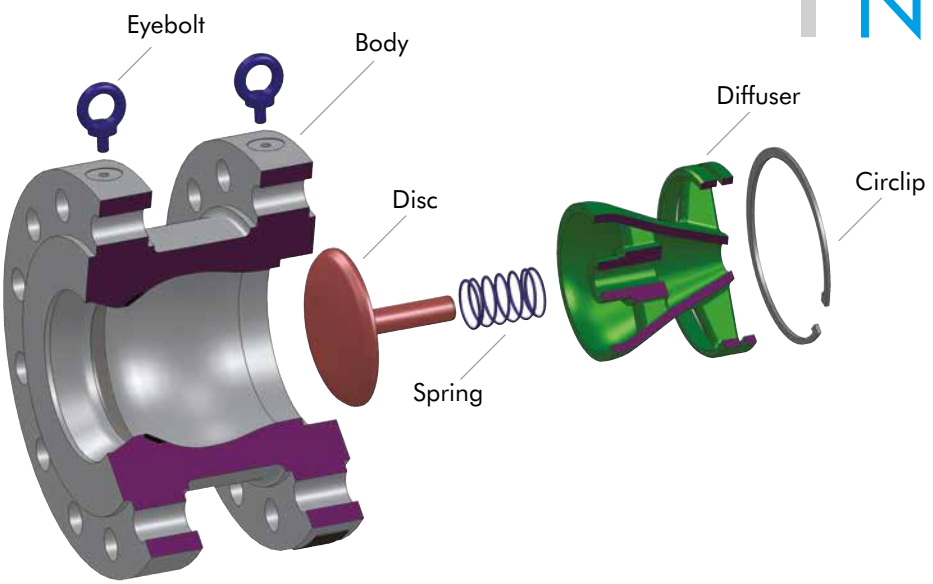

Type ZBF

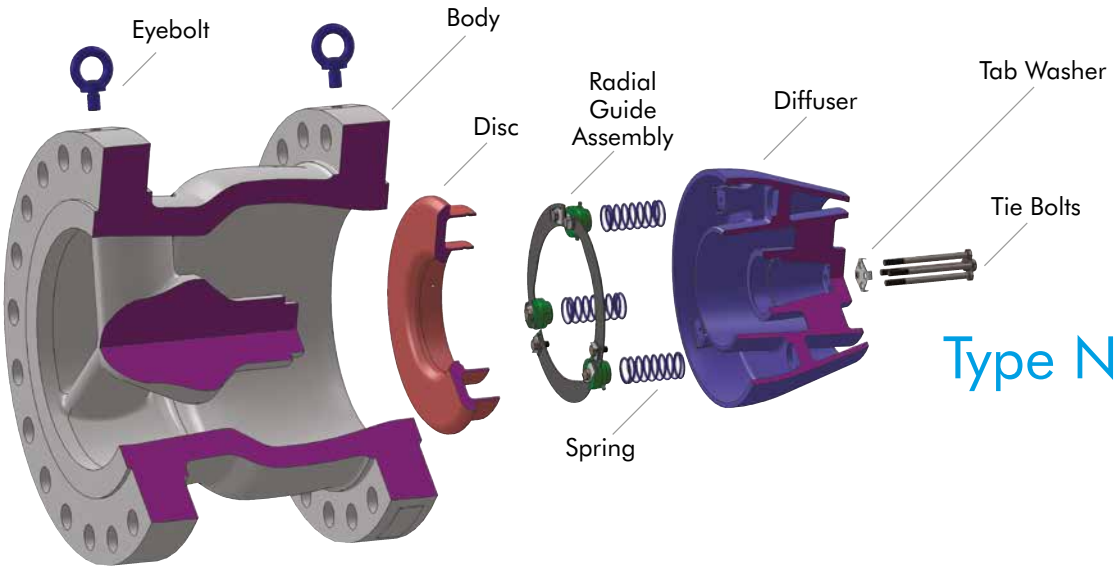

Type NBF

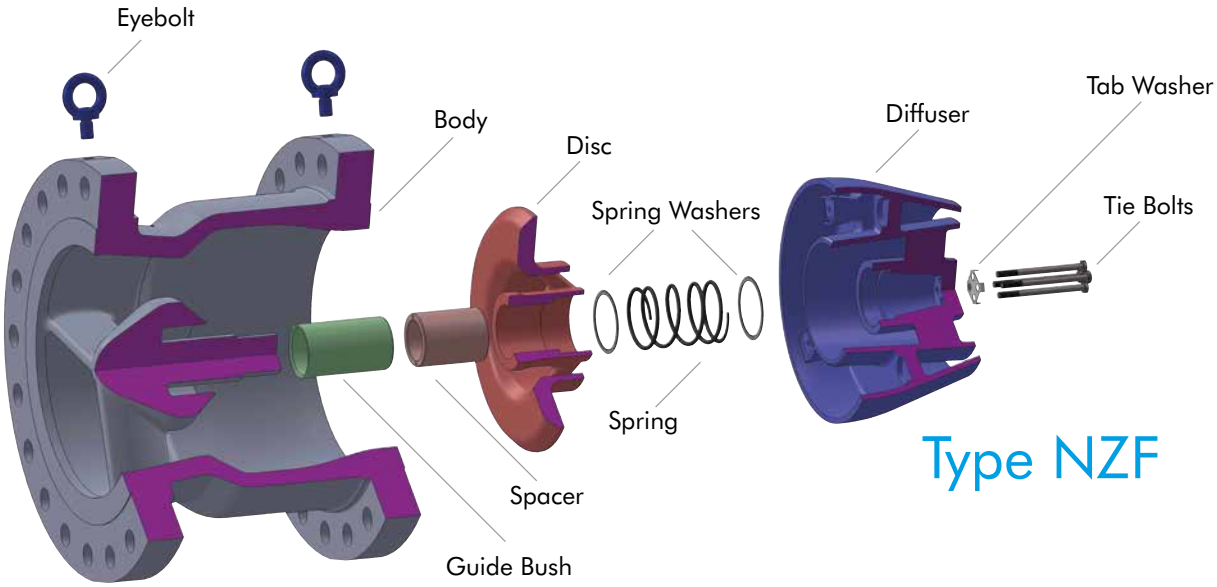

Type NZF

GOODWIN
INTERNATIONAL LTD

Solid Disc

Type ZB & ZD

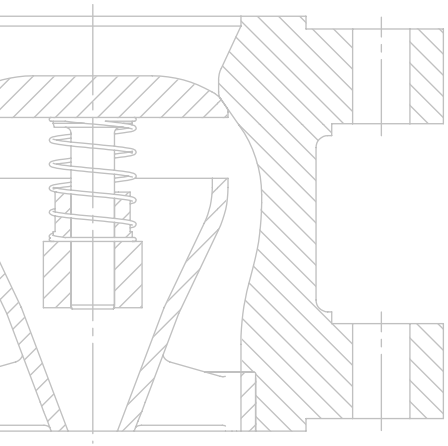

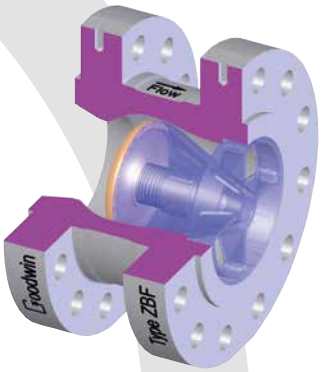

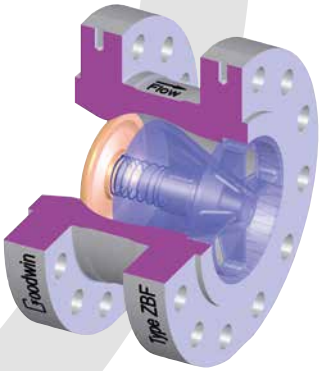

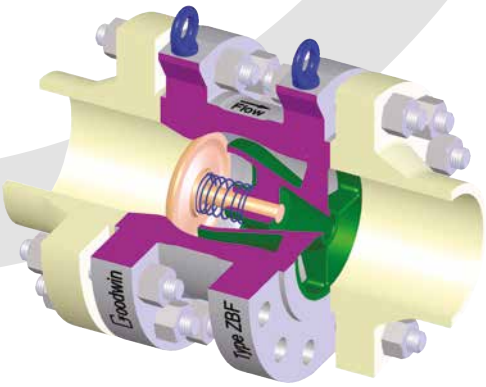

The axial design of the ZB and ZD range results in a streamlined flow path around the disc and high pressure recovery, minimising pressure drop across and maximising flow through the valve.

Features

- Non-slam closure
- Very low pressure loss
- Short face-to-face length
- Low weight
- Metal sealing
- Maintenance free
- Valve design to ASME B16.34

End Connections Available

- Flanged
- Buttweld
- Hub End
- Compact flange

TYPE ZB

Goodwin Standard Face-to-Face Dimensions (standard valves for sizes 1" to 10")

TYPE ZD

API 6D Face-to-Face Dimensions

Buttweld and Hub End valve face-to-face dimensions and weights are available upon request.

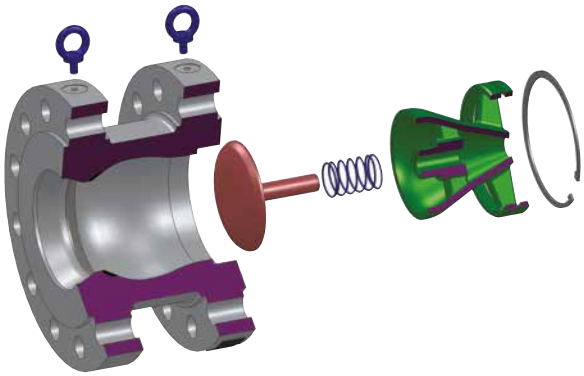

Type ZBF & ZDF

Installation Dimensions

Flanges according to ASME B16.5

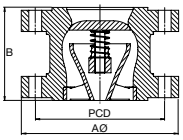

ZBF

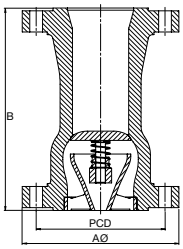

ZDF

Size inches	Pressure Rating ASME ZDE /ZBF	End Facing	A mm	Type ZBF Standard Face-to-Face B mm	Type ZBF Standard Face-to-Face Valve Weight kg	Type ZDF API 6D Face-to-Face B RF mm	Type ZDF API 6D Face-to-Face B RJ mm	Type ZDF API 6D Face-to-Face † Valve Weight kg	FLANGE DETAIL HOLE P.C.D. No.	FLANGE DETAIL HOLE DIA. mm	FLANGE DETAIL STUD SELECTION No.	FLANGE DETAIL STUD SELECTION DIA. Inches	FLANGE DETAIL STUD SELECTION *Length mm
1 (25mm)	150	RF	110	100	4	127	---	3	79.4	15.8	4	1/2	85
	300	RF	125	100	4	246	---	5.5	88.9	19.1	4	5/8	95
	600	RF/RJ-16	125	100	5	---	---	---	88.9	19.1	4	5/8	100
	900	RF/RJ-16	150	150	9	---	---	---	101.6	25.4	4	7/8	140
	1500	RF/RJ-16	150	150	16	---	---	---	101.6	25.4	4	7/8	140
	2500	RF/RJ-18	160	160	28	---	---	---	108.0	25.4	4	7/8	155
1¼ (32mm)	150	RF	115	100	5	---	---	---	88.9	15.8	4	1/2	85
	300	RF	135	100	5	---	---	---	98.4	19.1	4	5/8	100
	600	RF/RJ-18	135	100	9	---	---	---	98.4	19.1	4	5/8	105
	900	RF/RJ-18	160	150	11	---	---	---	111.1	25.4	4	7/8	140
	1500	RF/RJ-18	160	150	20	---	---	---	111.1	25.4	4	7/8	140
	2500	RF/RJ-21	185	180	35	---	---	---	130.2	28.6	4	1	165
1½ (40mm)	150	RF	125	120	7	---	---	---	98.4	15.8	4	1/2	90
	300	RF	155	120	7	24.1	---	10.2	114.3	22.2	4	3/4	115
	600	RF/RJ-20	155	120	11	24.1	---	11	114.3	22.2	4	3/4	120
	900	RF/RJ-20	180	170	13	---	---	---	123.8	28.6	4	1	155
	1500	RF/RJ-20	180	170	23	---	---	---	123.8	28.6	4	1	155
	2500	RF/RJ-23	205	210	40	---	---	---	146.0	31.8	4	1 1/8	190
2 (50mm)	150	RF	152	120	7	203	---	9	120.7	19.1	4	5/8	105
	300	RF	165	120	9	267	---	13	127.0	19.1	8	5/8	110
	600	RF/RJ-23	165	120	10	292	295	15	127.0	19.1	8	5/8	135
	900	RF/RJ-24	216	170	26	368	371	37	165.1	25.4	8	7/8	170
	1500	RF/RJ-24	216	170	26	368	371	37	165.1	25.4	8	7/8	170
	2500	RF/RJ-26	235	210	37	451	454	54	171.4	28.6	8	1	205
2½ (65mm)	150	RF	180	120	10	216	---	15	139.7	19.1	4	5/8	105
	300	RF	190	150	10	292	---	19	149.2	22.2	8	3/4	120
	600	RF/RJ-26	190	150	17	330	333	23	149.2	22.2	8	3/4	130
	900	RF/RJ-27	245	190	25	419	422	52	190.5	28.5	8	1	175
	1500	RF/RJ-27	245	190	35	419	422	67	190.5	28.5	8	1	175
	2500	RF/RJ-28	265	240	65	508	514	81	196.8	31.8	8	1 1/8	215
3 (80mm)	150	RF	191	120	13	241	---	16	152.4	19.1	4	5/8	110
	300	RF	210	150	18	318	---	26	168.3	22.2	8	3/4	130
	600	RF/RJ-31	210	150	20	356	359	30	168.3	22.2	8	3/4	155
	900	RF/RJ-31	241	190	32	381	384	43	190.5	25.4	8	7/8	170
	1500	RF/RJ-35	267	220	45	470	473	65	203.2	31.8	8	1 1/8	200
	2500	RF/RJ-32	305	270	83	578	584	119	228.6	34.9	8	1 1/4	250
4 (100mm)	150	RF	229	140	20	292	---	28	190.5	19.1	8	5/8	110
	300	RF	254	170	31	356	---	41	200.0	22.2	8	3/4	135
	600	RF/RJ-37	273	170	40	432	435	63	215.9	25.4	8	7/8	175
	900	RF/RJ-37	292	210	53	457	460	73	235.0	31.8	8	1 1/8	195
	1500	RF/RJ-39	311	240	69	546	549	107	241.3	34.9	8	1 1/4	220
	2500	RF/RJ-38	356	310	131	673	683	273	273.0	41.3	8	1 1/2	290

* Where Ring Joint Facing shown in End Facing, Stud lengths based on Ring Joint flange connection.

† Weights are for valve only and exclude mating flanges and bolting. Weight will vary according to corrosion allowance specification.

Type ZBF & ZDF

Installation Dimensions

Flanges according to ASME B16.5

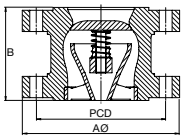

ZBF

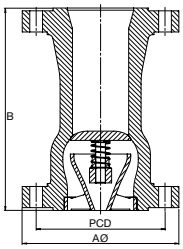

ZDF

Size inches	Pressure Rating ASME ZDF / ZBF	End Facing	A mm	Type ZBF Standard Face-to-Face B mm	Type ZBF Standard Face-to-Face Valve Weight kg	Type ZDF API 6D Face-to-Face B RF mm	Type ZDF API 6D Face-to-Face B RJ mm	Type ZDF API 6D Face-to-Face † Valve Weight kg	FLANGE DETAIL HOLE P.C.D. No.	FLANGE DETAIL HOLE DIA. mm	FLANGE DETAIL STUD SELECTION No.	FLANGE DETAIL STUD SELECTION DIA. Inches	FLANGE DETAIL STUD SELECTION *Length mm
5 (125mm)	150	RF	255	210	31	---	---	---	215.9	22.2	8	3/4	120
	300	RF	280	210	31	---	---	---	235.0	22.2	8	3/4	140
	600	RF/RJ-41	330	210	55	---	---	---	266.7	28.6	8	1	190
	900	RF/RJ-41	350	230	85	---	---	---	279.4	34.9	8	1 1/4	220
	1500	RF/RJ-44	375	310	140	---	---	---	292.1	41.3	8	1 1/2	285
	2500	RF/RJ-42	420	370	225	---	---	---	323.8	47.6	8	1 3/4	335
6 (150mm)	150	RF	279	210	38	356	---	44	241.3	22.2	8	3/4	120
	300	RF	318	210	55	445	---	80	269.9	22.2	12	3/4	145
	600	RF/RJ-45	356	210	82	559	562	137	292.1	28.6	12	1	200
	900	RF/RJ-45	381	230	107	610	613	171	317.5	31.8	12	1 1/8	220
	1500	RF/RJ-46	394	310	160	705	711	231	317.5	38.1	12	1 3/8	295
	2500	RF/RJ-47	483	430	324	914	927	487	368.3	54.0	8	2	380
8 (200mm)	150	RF	343	280	71	495	---	90	298.5	22.2	8	3/4	125
	300	RF	381	280	91	533	---	120	330.2	25.4	12	7/8	160
	600	RF/RJ-49	419	280	135	660	664	213	349.2	31.8	12	1 1/8	220
	900	RF/RJ-49	470	280	189	737	740	307	393.7	38.1	12	1 3/8	250
	1500	RF/RJ-50	483	350	269	832	841	390	393.7	44.5	12	1 5/8	325
	2500	RF/RJ-51	552	460	480	1022	1038	743	438.2	54.0	12	2	425
10 (250mm)	150	RF	406	350	120	622	---	151	362.0	25.4	12	7/8	140
	300	RF	445	350	152	622	---	184	387.4	28.6	16	1	180
	600	RF/RJ-53	508	350	252	787	791	380	431.8	34.9	16	1 1/4	245
	900	RF/RJ-53	546	350	303	838	841	461	469.9	38.1	16	1 3/8	265
	1500	RF/RJ-54	584	400	461	991	1000	710	482.6	50.8	12	1 7/8	370
	2500	RF/RJ-55	673	580	952	1270	1292	1442	539.8	66.7	12	2 1/2	535

* Where Ring Joint Facing shown in End Facing, Stud lengths based on Ring Joint flange connection.

† Weights are for valve only and exclude mating flanges and bolting. Weight will vary according to corrosion allowance specification.

GOODWIN
INTERNATIONAL LTD

Ring Disc

Type NB & ND

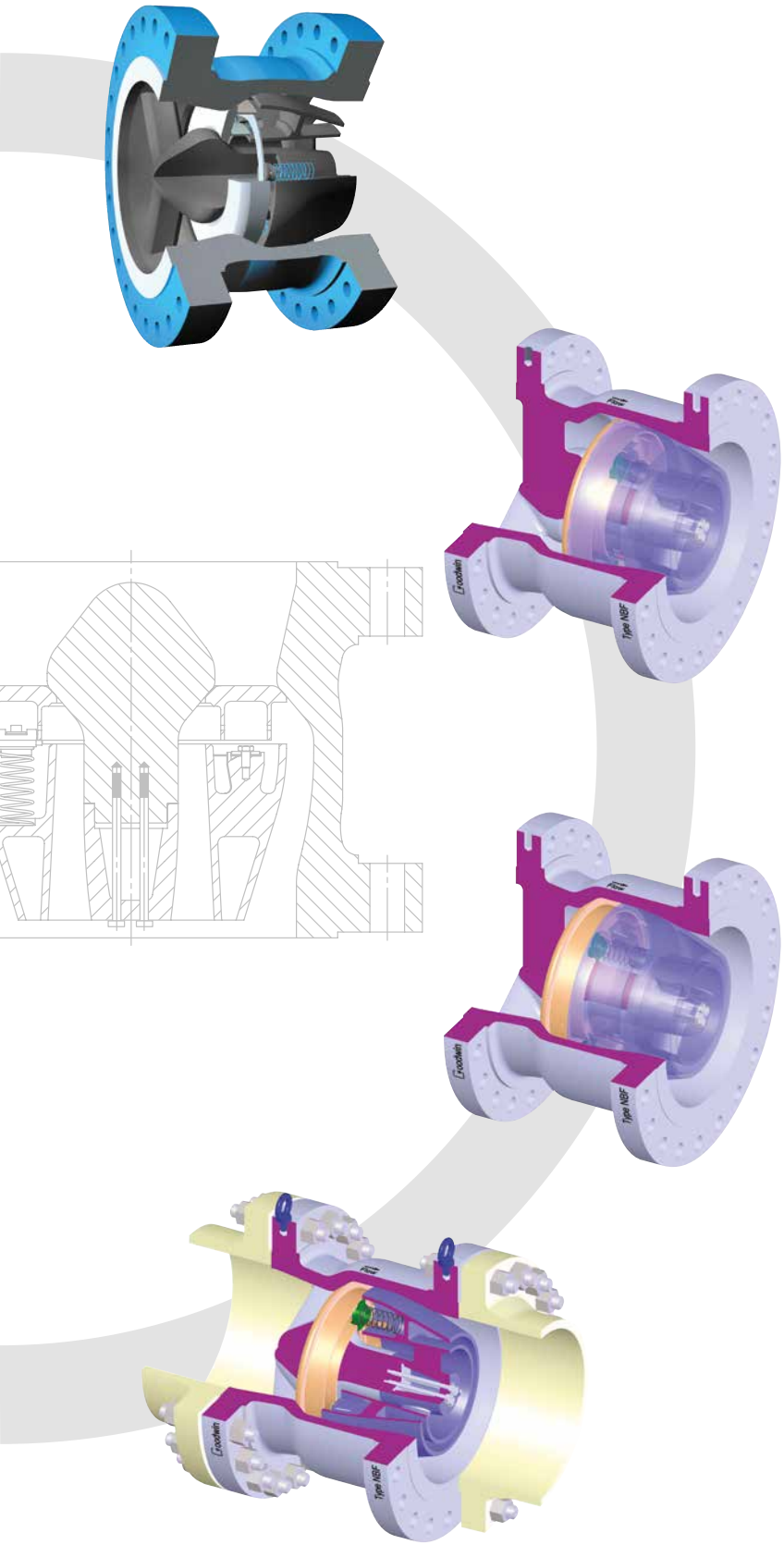

The NB employs the worldwide proven ring disc/radial guide design. With its friction free guiding and the aerodynamic flowpath through its two ring shaped flow ports, the NB is "best in class" for speed of response and flow capacity.

Features

- Suitable for all liquids
- Non-slam closure
- Very low pressure loss
- Friction-free valve disc guiding
- Metal sealing
- Maintenance free
- Valve design to ASME B16.34

End Connections Available

- Flanged
- Buttweld
- Hub End
- Compact flange

TYPE NB

Goodwin Standard Long Face-to-Face Dimensions (standard long face-to-face for 12" and above)

TYPE ND

API 6D Face-to-Face Dimensions

Buttweld and Hub End valve face to face dimensions and weights are available upon request.

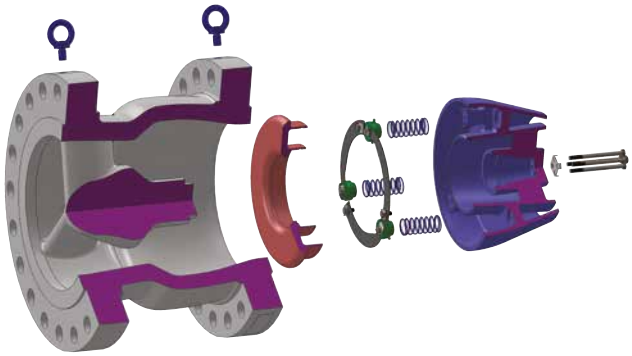

Type NBF & NDF

Installation Dimensions

Flanges according to ASME B16.5 / ASME B16.47 SERIES A (MSS SP44)

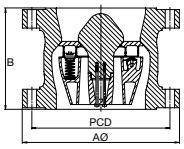

NBF

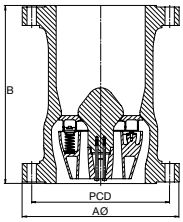

NDF

Size inches	Pressure Rating ASME	End Facing	A mm	Type NBF Standard Face-to-Face B mm	Type NBF † Valve Weight kg	Type NDF API 6D Face-to-Face B RF mm	Type NDF B RJ mm	Type NDF † Valve Weight kg	FLANGE DETAIL HOLE P.C.D. No.	HOLE DIA. mm	STUD SELECTION No.	DIA. Inches	*Length mm
12 (300mm)	150	RF	483	350	175	699	---	341	431.8	25.4	12	7/8	150
	300	RF	521	350	235	711	---	400	450.8	31.8	16	1 1/8	205
	600	RF/RJ-57	559	375	310	838	841	623	489.0	34.9	20	1 1/4	255
	900	RF/RJ-57	610	340	390	965	968	966	533.4	38.1	20	1 3/8	285
	1500	RF/RJ-58	673	440	705	1130	1146	1638	571.5	54.0	16	2	415
	2500	RF/RJ-60	762	580	1286	1422	1445	2975	619.1	73.0	12	2 3/4	585
14 (350mm)	150	RF	533	405	245	787	---	480	476.3	28.6	12	1	165
	300	RF	584	405	330	838	---	601	514.4	31.8	20	1 1/8	210
	600	RF/RJ-61	603	440	410	889	892	819	527.0	38.1	20	1 3/8	265
	900	RF/RJ-62	641	490	510	1029	1038	1211	558.8	41.3	20	1 1/2	310
	1500	RF/RJ-63	749	490	1040	1257	1276	2114	635.0	60.3	16	2 1/4	455
16 (400mm)	150	RF	597	455	345	864	---	714	539.8	28.6	16	1	170
	300	RF	648	455	435	864	---	805	571.5	34.9	20	1 1/4	220
	600	RF/RJ-65	686	500	610	991	994	1120	603.2	41.3	20	1 1/2	285
	900	RF/RJ-66	705	470	760	1130	1140	1407	616.0	44.5	20	1 5/8	325
	1500	RF/RJ-67	826	530	1280	1384	1407	1417	704.8	66.7	16	2 1/2	500
18 (450mm)	150	RF	635	520	425	978	---	868	577.9	31.8	16	1 1/8	180
	300	RF	711	520	580	978	---	1036	628.6	34.9	24	1 1/4	230
	600	RF/RJ-69	743	565	790	1092	1095	1442	654.0	44.5	20	1 5/8	305
	900	RF/RJ-70	787	530	960	1219	1232	1960	685.8	50.8	20	1 7/8	365
	1500	RF/RJ-71	914	580	1600	1537	1559	3955	774.7	73.0	16	2 3/4	555
20 (500mm)	150	RF	699	570	560	978	---	970	635.0	31.8	20	1 1/8	190
	300	RF	775	570	760	1016	---	1217	685.8	34.9	24	1 1/4	240
	600	RF/RJ-73	813	625	1170	1194	1200	1840	723.9	44.5	24	1 5/8	325
	900	RF/RJ-74	857	595	1260	1321	1334	2422	749.3	54.0	20	2	385
	1500	RF/RJ-75	984	655	2100	1664	1686	5124	831.8	79.4	16	3	590
24 (600mm)	150	RF	813	685	890	1295	---	1691	749.3	34.9	20	1 1/4	205
	300	RF	914	685	1240	1346	---	2177	812.8	41.3	24	1 1/2	265
	600	RF/RJ-77	940	745	1630	1397	1407	2513	838.2	50.8	24	1 7/8	365
	900	RF/RJ-78	1041	665	1980	1549	1568	3661	901.7	66.7	20	2 1/2	485
	1500	RF/RJ-79	1168	750	3300	1943	1972	8183	990.6	92.1	16	3 1/2	675
28 (700mm)	150	RF	927	800	1330	1448	---	1996	863.6	34.9	28	1 1/4	255
	300	RF	1035	800	1800	1499	---	2860	939.8	44.5	28	1 5/8	305
	600	RF/RJ-93	1073	870	2450	1600	1613	4212	965.2	54.0	28	2	405
	900	RF/RJ-100	1168	860	2890	---	---	---	1022.4	79.4	20	3	525
30 (750mm)	150	RF	984	855	1990	1524	---	2353	914.4	34.9	28	1 1/4	260
	300	RF	1092	855	2150	1594	---	3523	997.0	47.6	28	1 3/4	325
	600	RF/RJ-95	1130	930	2570	1651	1664	4784	1022.4	54.0	28	2	410
	900	RF/RJ-102	1232	925	3540	---	---	---	1085.8	79.4	20	3	540
32 (800mm)	150	RF	1060	910	1990	---	---	---	977.9	41.3	28	1 1/2	290
	300	RF	1149	910	2200	---	---	---	1054.1	50.8	28	1 7/8	345
	600	RF/RJ-96	1194	990	3200	---	---	---	1079.5	60.3	28	2 1/4	430
	900	RF/RJ-103	1314	925	4900	---	---	---	1155.7	85.7	20	3 1/4	570

* Where Ring Joint Facing shown in End Facing, Stud lengths based on Ring Joint flange connection.

† Weights are for valve only and exclude mating flanges and bolting. Weight will vary according to corrosion allowance specification.

Type NBF & NDF

Installation Dimensions

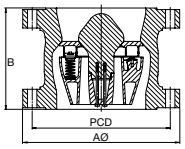

NBF

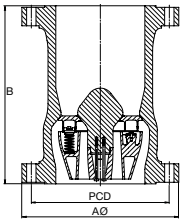

NDF

Flanges according to ASME B16.47 SERIES A (MSS SP44)

Size inches	Pressure Rating ASME	End Facing	A mm	Type NBF Standard Face-to-Face B mm	Type NBF † Valve Weight kg	Type NDF API 6D Face-to-Face B RF mm	Type NDF B RJ mm	Type NDF † Valve Weight kg	FLANGE DETAIL HOLE P.C.D. No.	HOLE DIA. mm	STUD SELECTION No.	DIA. Inches	*Length mm
36 (900mm)	150	RF	1168	1030	2300	1956	---	3556	1085.8	41.3	32	1 1/2	305
	300	RF	1270	1030	3100	2083	---	5727	1168.4	54.0	32	2	360
	600	RF/RJ-98	1314	1120	4100	2083	---	7261	1193.8	66.7	28	2 1/2	455
	900	RF/RJ-105	1461	1050	5900	---	---	---	1289.0	92.1	20	3 1/2	615
40 (1000mm)	150	RF	1289	1135	3400	---	---	---	1200.2	41.3	36	1 1/2	305
	300	RF	1238	1135	3900	---	---	---	1155.7	44.5	32	1 5/8	360
	600	RF	1321	1240	5400	---	---	---	1212.9	60.3	32	2 1/4	490
	900	RF	1511	1185	OA	---	---	---	1339.8	92.1	24	3 1/2	630
42 (1050mm)	150	RF	1346	1195	3600	---	---	---	1257.3	41.3	36	1 1/2	320
	300	RF	1289	1195	4100	---	---	---	1206.5	44.5	32	1 5/8	370
	600	RF	1403	1300	5800	---	---	---	1282.7	66.7	28	2 1/2	520
	900	RF	1562	1250	OA	---	---	---	1390.6	92.1	24	3 1/2	650
48 (1200mm)	150	RF	1511	1365	5200	---	---	---	1422.4	41.3	44	1 1/2	340
	300	RF	1467	1365	6000	---	---	---	1371.6	50.8	32	1 7/8	410
	600	RF	1594	1485	8800	---	---	---	1460.5	73.0	32	2 3/4	575
	900	RF	1785	1450	OA	---	---	---	1587.5	104.8	24	4	670

Flanges according to ASME B16.47 SERIES B (API 605)

Size inches	Pressure Rating ASME	End Facing	A mm	Type NBF Standard Face-to-Face B mm	Type NBF † Valve Weight kg	Type NDF API 6D Face-to-Face B RF mm	Type NDF B RJ mm	Type NDF † Valve Weight kg	FLANGE DETAIL HOLE P.C.D. No.	HOLE DIA. mm	STUD SELECTION No.	DIA. Inches	*Length mm
28 (700mm)	150	RF	837	800	1330	1448	---	1775	795.3	22.2	40	3/4	175
	300	RF	921	800	1800	1499	---	2535	857.2	34.9	36	1 1/4	290
	600	RF/RJ-94	953	870	2450	1600	1613	3705	863.6	47.6	28	1 3/4	395
	900	RF/RJ-101	1105	860	2890	---	---	---	971.6	73.0	20	2 3/4	515
30 (750mm)	150	RF	887	855	1590	1524	---	2080	846.1	22.2	44	3/4	175
	300	RF	991	855	2150	1594	---	3250	920.8	38.1	36	1 3/8	305
	600	RF/RJ-95	1022	930	2570	1651	1664	4472	927.1	50.8	28	1 7/8	420
	900	RF/RJ-102	1181	925	3540	---	---	---	1035.0	79.4	20	3	545
32 (800mm)	150	RF	941	910	1990	---	---	---	900.1	22.2	48	3/4	175
	300	RF	1054	910	2200	---	---	---	977.9	41.3	32	1 1/2	330
	600	RF/RJ-96	1086	990	3200	---	---	---	984.2	54.0	28	2	440
	900	RF/RJ-103	1238	925	4900	---	---	---	1092.2	79.4	20	3	555
36 (900mm)	150	RF	1057	1030	2300	1956	---	3062	1009.6	25.4	44	7/8	195
	300	RF	1172	1030	3100	2083	---	5285	1089.0	44.5	32	1 5/8	340
	600	RF/RJ-98	1213	1120	4100	2083	---	6832	1104.9	60.3	28	2 1/4	480
	900	RF/RJ-105	1346	1050	5900	---	---	---	1200.2	79.4	24	3	585
40 (1000mm)	150	RF	1175	1135	3400	---	---	---	1120.8	28.6	44	1	210
	300	RF	1273	1135	3900	---	---	---	1190.6	44.5	40	1 5/8	365
42 (1050mm)	150	RF	1226	1195	3600	---	---	---	1171.6	28.6	48	1	215
	300	RF	1334	1195	4100	---	---	---	1244.6	47.6	36	1 3/4	375
48 (1200mm)	150	RF	1392	1365	5200	---	---	---	1335.1	31.8	44	1 1/8	235
	300	RF	1511	1365	6000	---	---	---	1416.0	50.8	40	1 7/8	400

* Where Ring Joint Facing shown in End Facing, Stud lengths based on Ring Joint flange connection.

† Weights are for valve only and exclude mating flanges and bolting. Weight will vary according to corrosion allowance specification.

GOODWIN
INTERNATIONAL LTD

Ring Disc
Type NK

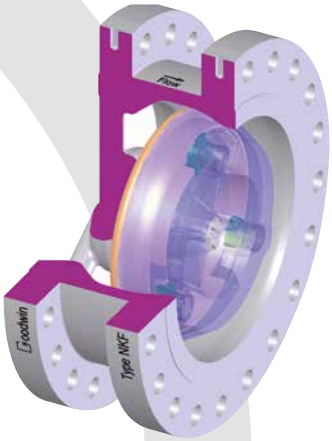

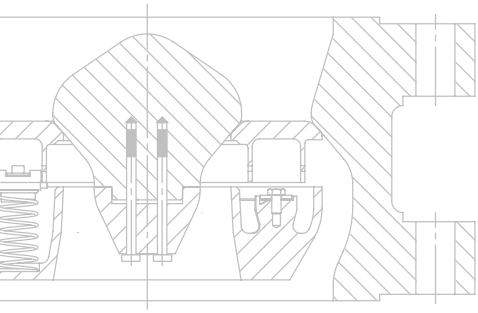

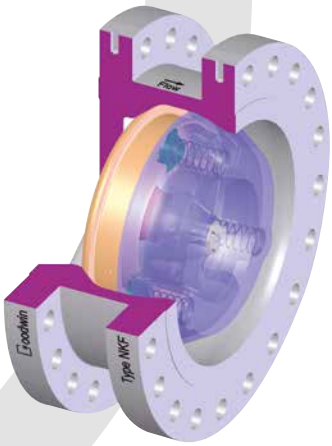

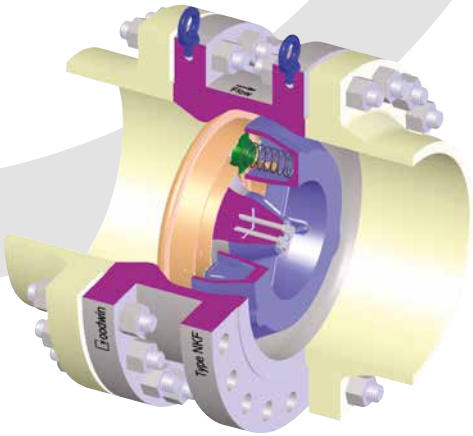

The NK is the compact model of ring disc/radial guide design. With its short face-to-face and reduced weight, the compact NK is a lower cost solution to the NB when marginally higher pressure drops can be accepted.

Features

- Suitable for all liquids
- Non-slam closure
- Low pressure loss
- Friction-free valve disc guiding
- Metal sealing
- Short face-to-face length
- Low weight
- Maintenance free
- Valve design to ASME B16.34

End Connections Available

- Flanged
- Hub End
- Solid Lug
- Buttweld
- Wafer
- Compact Flange

TYPE NK

Goodwin Standard Compact Face-to-Face Dimensions (standard valves for 12" and above)

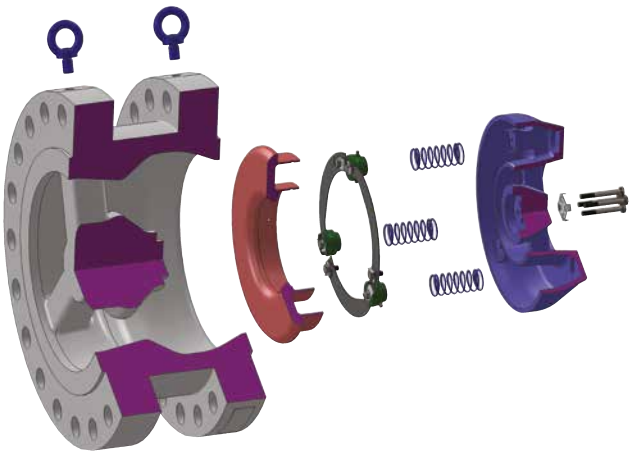

Type NKF

Installation Dimensions

Flanges according to ASME B16.5 / ASME B16.47 SERIES A

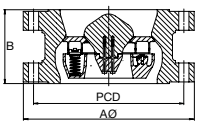

Size inches	Pressure Rating ASME	End Facing	A mm	B mm	Valve Weight kg	FLANGE DETAIL HOLE P.C.D. No.	HOLE DIA. mm	STUD SELECTION No.	DIA. Inches	*Length mm
12 (300mm)	150	RF	483	181	105	431.8	25.4	12	7/8	150
	300	RF	521	181	155	450.8	31.8	16	1 1/8	205
	600	RF/RJ-57	559	229	240	489.0	34.9	20	1 1/4	255
	900	RF/RJ-57	610	310	380	533.4	38.1	20	1 3/8	285
14 (350mm)	150	RF	533	222	160	476.3	28.6	12	1	165
	300	RF	584	222	230	514.4	31.8	20	1 1/8	210
	600	RF/RJ-61	603	273	320	527.0	38.1	20	1 3/8	265
	900	RF/RJ-62	641	356	440	558.8	41.3	20	1 1/2	310
16 (400mm)	150	RF	597	245	230	539.8	28.6	16	1	170
	300	RF	648	245	340	571.5	34.9	20	1 1/4	220
	600	RF/RJ-65	686	305	440	603.2	41.3	20	1 1/2	285
	900	RF/RJ-66	705	384	580	616.0	44.5	20	1 5/8	325
18 (450mm)	150	RF	635	264	260	577.9	31.8	16	1 1/8	180
	300	RF	711	264	350	628.6	34.9	24	1 1/4	230
	600	RF/RJ-69	743	362	570	654.0	44.5	20	1 5/8	305
	900	RF/RJ-70	787	420	800	685.8	50.8	20	1 7/8	365
20 (500mm)	150	RF	699	305	350	635.0	31.8	20	1 1/8	190
	300	RF	775	305	510	685.8	34.9	24	1 1/4	240
	600	RF/RJ-73	813	368	740	723.9	44.5	24	1 5/8	325
	900	RF/RJ-74	857	430	900	749.3	54.0	20	2	385
24 (600mm)	150	RF	813	370	560	749.3	34.9	20	1 1/4	205
	300	RF	914	370	780	812.8	41.3	24	1 1/2	265
	600	RF/RJ-77	940	438	1120	838.2	50.8	24	1 7/8	365
	900	RF/RJ-78	1041	495	1650	901.7	66.7	20	2 1/2	485
28 (700mm)	150	RF	927	430	820	863.6	34.9	28	1 1/4	255
	300	RF	1035	430	1250	939.8	44.5	28	1 5/8	305
	600	RF/RJ-93	1073	480	1600	965.2	54.0	28	2	405
	900	RF/RJ-100	1168	540	2250	1022.4	79.4	20	3	525
30 (750mm)	150	RF	984	460	950	914.4	34.9	28	1 1/4	260
	300	RF	1092	460	1330	997.0	47.6	28	1 3/4	325
	600	RF/RJ-95	1130	505	1760	1022.4	54.0	28	2	410
	900	RF/RJ-102	1232	560	2600	1085.8	79.4	20	3	540
32 (800mm)	150	RF	1060	500	1090	977.9	41.3	28	1 1/2	290
	300	RF	1149	500	1500	1054.1	50.8	28	1 7/8	345
	600	RF/RJ-96	1194	584	2100	1079.5	60.3	28	2 1/4	430
	900	RF/RJ-103	1314	OA	OA	1155.7	85.7	20	3 1/4	570

* Where Ring Joint Facing shown in End Facing, Stud lengths based on Ring Joint flange connection.

Type NKF

Installation Dimensions

Flanges according to ASME B16.5 / ASME B16.47 SERIES A

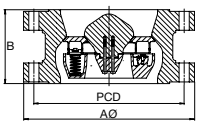

Size inches	Pressure Rating ASME	End Facing	A mm	B mm	Valve Weight kg	FLANGE DETAIL HOLE P.C.D. No.	HOLE DIA. mm	STUD SELECTION No.	DIA. Inches	*Length mm
36 (900mm)	150	RF	1168	600	1600	1085.8	41.3	32	1 1/2	305
	300	RF	1270	600	2100	1168.4	54.0	32	2	360
	600	RF/RJ-98	1314	635	2800	1193.8	66.7	28	2 1/2	455
	900	RF/RJ-105	1461	690	4700	1289.0	92.1	20	3 1/2	615
40 (1000mm)	150	RF	1289	650	2100	1200.2	41.3	36	1 1/2	320
	300	RF	1238	650	2120	1155.7	44.5	32	1 5/8	370
	600	RF	1321	820	3200	1212.9	60.3	32	2 1/4	520
	900	RF	1511	970	6400	1339.8	92.1	24	3 1/2	650
42 (1050mm)	150	RF	1346	670	2500	1257.3	41.3	36	1 1/2	320
	300	RF	1289	720	2600	1206.5	44.5	32	1 5/8	370
	600	RF	1403	870	4100	1282.7	66.7	28	2 1/2	520
	900	RF	1562	1100	6700	1390.6	92.1	24	3 1/2	650
48 (1200mm)	150	RF	1511	740	3300	1422.4	41.3	44	1 1/2	340
	300	RF	1467	840	3600	1371.6	50.8	32	1 7/8	410
	600	RF	1594	970	5850	1460.5	73.0	32	2 3/4	575
	900	RF	1785	1200	8300	1587.5	104.8	24	4	670

* Where Ring Joint Facing shown in End Facing, Stud lengths based on Ring Joint flange connection.

Flanges according to ASME B16.47 SERIES B

Size inches	Pressure Rating ASME	End Facing	A mm	B mm	Valve Weight kg	FLANGE DETAIL HOLE P.C.D. No.	HOLE DIA. mm	STUD SELECTION No.	DIA. Inches	*Length mm
28 (700mm)	150	RF	837	430	820	795.3	22.2	40	3/4	175
	300	RF	921	430	960	857.2	34.9	36	1 1/4	290
	600	RF/RJ-94	953	480	1600	863.6	47.6	28	1 3/4	395
	900	RF/RJ-101	1105	540	2250	971.6	73.0	20	2 3/4	515
30 (750mm)	150	RF	887	460	950	846.1	22.2	44	3/4	175
	300	RF	991	460	1330	920.8	38.1	36	1 3/8	305
	600	RF/RJ-95	1022	505	1760	927.1	50.8	28	1 7/8	420
	900	RF/RJ-102	1181	560	2600	1035.0	79.4	20	3	545
32 (800mm)	150	RF	941	500	1090	900.1	22.2	48	3/4	175
	300	RF	1054	500	1500	977.9	41.3	32	1 1/2	330
	600	RF/RJ-96	1086	584	2100	984.2	54.0	28	2	440
	900	RF/RJ-103	1238	OA	OA	1092.2	79.4	20	3	555
36 (900mm)	150	RF	1057	560	1600	1009.6	25.4	44	7/8	195
	300	RF	1172	560	2100	1089.0	44.5	32	1 5/8	340
	600	RF/RJ-98	1213	635	2800	1104.9	60.3	28	2 1/4	480
	900	RF/RJ-105	1346	690	4700	1200.2	79.4	24	3	585
40 (1000mm)	150	RF	1175	650	2100	1120.8	28.6	44	1	210
	300	RF	1273	650	2120	1190.6	44.5	40	1 5/8	365
42 (1050mm)	150	RF	1226	670	2500	1171.6	28.6	48	1	215
	300	RF	1334	720	2600	1244.6	47.6	36	1 3/4	375
48 (1200mm)	150	RF	1392	740	3300	1335.1	31.8	44	1 1/8	235
	300	RF	1511	840	3600	1416.0	50.8	40	1 7/8	400

* Where Ring Joint Facing shown in End Facing, Stud lengths based on Ring Joint flange connection.

GOODWIN
INTERNATIONAL LTD

Ring Disc

Type NZ & NA

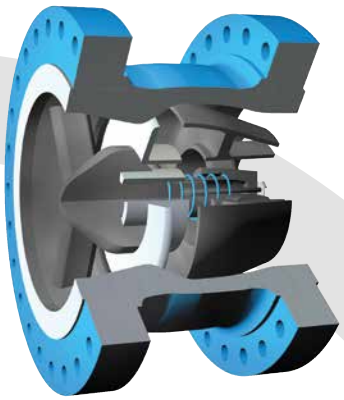

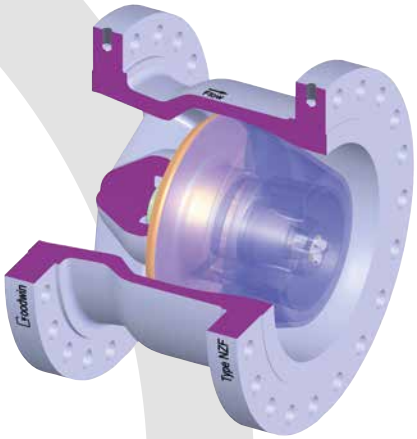

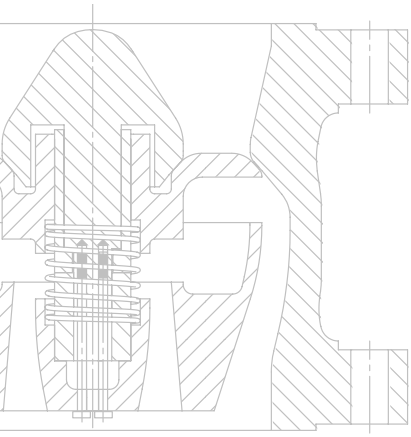

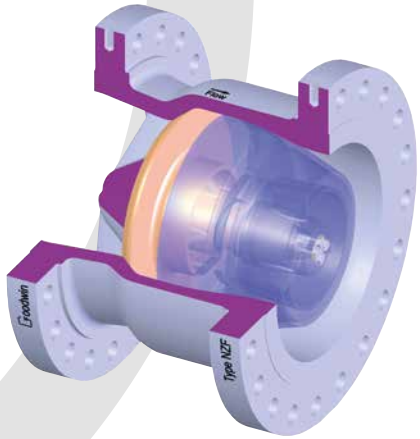

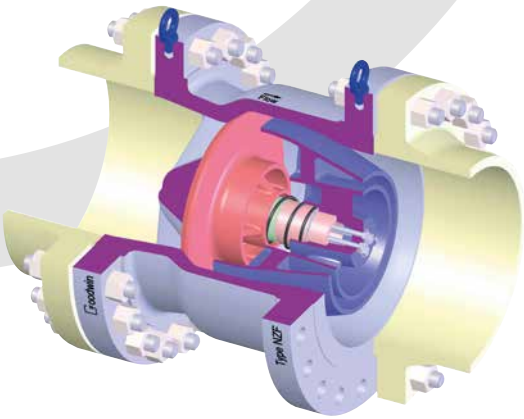

With the NZ the ring disc is centrally guided with a single spring. Utilising the same valve body as its sister valve the Type N, it provides the same internal flow profile and, consequently, the same minimal pressure loss as the Type N.

Features

- Suitable for all gaseous fluids
- Non-slam closure
- Very low pressure loss
- Metal sealing
- Maintenance free
- Valve design to ASME B16.34

End Connections Available

- Flanged
- Buttweld
- Hub End
- Compact flange

TYPE NZ

Goodwin Standard Long Face-to-Face Dimensions (standard long face-to-face for 12" and above)

TYPE NA

API 6D Face-to-Face Dimensions

Buttweld and Hub End valve face-to-face dimensions and weights are available upon request.

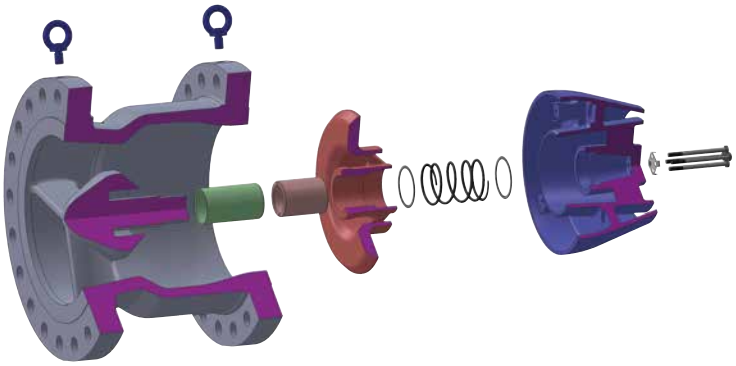

Type NZF & NAF

Installation Dimensions

Flanges according to ASME B16.5 / ASME B16.47 SERIES A (MSS SP44)

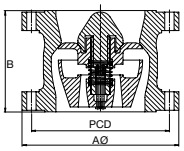

NZF

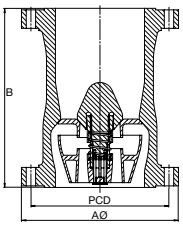

NAF

Size inches	Pressure Rating ASME	End Facing	A mm	Type NZF Standard Face-to-Face B mm	Type NZF † Valve Weight kg	Type NAF API 6D Face-to-Face B RF mm	Type NAF B RJ mm	Type NAF † Valve Weight kg	FLANGE DETAIL HOLE P.C.D. No.	HOLE DIA. mm	STUD SELECTION No.	DIA. Inches	*Length mm
12 (300mm)	150	RF	483	350	175	699	---	341	431.8	25.4	12	7/8	150
	300	RF	521	350	235	711	---	400	450.8	31.8	16	1 1/8	205
	600	RF/RJ-57	559	375	310	838	841	623	489.0	34.9	20	1 1/4	255
	900	RF/RJ-57	610	340	390	965	968	966	533.4	38.1	20	1 3/8	285
	1500	RF/RJ-58	673	440	705	1130	1146	1638	571.5	54.0	16	2	415
	2500	RF/RJ-60	762	580	1286	1422	1445	2975	619.1	73.0	12	2 3/4	585
14 (350mm)	150	RF	533	405	245	787	---	480	476.3	28.6	12	1	165
	300	RF	584	405	330	838	---	601	514.4	31.8	20	1 1/8	210
	600	RF/RJ-61	603	440	410	889	892	819	527.0	38.1	20	1 3/8	265
	900	RF/RJ-62	641	490	510	1029	1038	1211	558.8	41.3	20	1 1/2	310
	1500	RF/RJ-63	749	490	1040	1257	1276	2114	635.0	60.3	16	2 1/4	455
16 (400mm)	150	RF	597	455	345	864	---	714	539.8	28.6	16	1	170
	300	RF	648	455	435	864	---	805	571.5	34.9	20	1 1/4	220
	600	RF/RJ-65	686	500	610	991	994	1120	603.2	41.3	20	1 1/2	285
	900	RF/RJ-66	705	470	760	1130	1140	1407	616.0	44.5	20	1 5/8	325
	1500	RF/RJ-67	826	530	1280	1384	1407	1417	704.8	66.7	16	2 1/2	500
18 (450mm)	150	RF	635	520	425	978	---	868	577.9	31.8	16	1 1/8	180
	300	RF	711	520	580	978	---	1036	628.6	34.9	24	1 1/4	230
	600	RF/RJ-69	743	565	790	1092	1095	1442	654.0	44.5	20	1 5/8	305
	900	RF/RJ-70	787	530	960	1219	1232	1960	685.8	50.8	20	1 7/8	365
	1500	RF/RJ-71	914	580	1600	1537	1559	3955	774.7	73.0	16	2 3/4	555
20 (500mm)	150	RF	699	570	560	978	---	970	635.0	31.8	20	1 1/8	190
	300	RF	775	570	760	1016	---	1217	685.8	34.9	24	1 1/4	240
	600	RF/RJ-73	813	625	1170	1194	1200	1840	723.9	44.5	24	1 5/8	325
	900	RF/RJ-74	857	595	1260	1321	1334	2422	749.3	54.0	20	2	385
	1500	RF/RJ-75	984	655	2100	1664	1686	5124	831.8	79.4	16	3	590
24 (600mm)	150	RF	813	685	890	1295	---	1691	749.3	34.9	20	1 1/4	205
	300	RF	914	685	1240	1346	---	2177	812.8	41.3	24	1 1/2	265
	600	RF/RJ-77	940	745	1630	1397	1407	2513	838.2	50.8	24	1 7/8	365
	900	RF/RJ-78	1041	665	1980	1549	1568	3661	901.7	66.7	20	2 1/2	485
	1500	RF/RJ-79	1168	750	3300	1943	1972	8183	990.6	92.1	16	3 1/2	675
28 (700mm)	150	RF	927	800	1330	1448	---	1996	863.6	34.9	28	1 1/4	255
	300	RF	1035	800	1800	1499	---	2860	939.8	44.5	28	1 5/8	305
	600	RF/RJ-93	1073	870	2450	1600	1613	4212	965.2	54.0	28	2	405
	900	RF/RJ-100	1168	860	2890	---	---	---	1022.4	79.4	20	3	525
30 (750mm)	150	RF	984	855	1990	1524	---	2353	914.4	34.9	28	1 1/4	260
	300	RF	1092	855	2150	1594	---	3523	997.0	47.6	28	1 3/4	325
	600	RF/RJ-95	1130	930	2570	1651	1664	4784	1022.4	54.0	28	2	410
	900	RF/RJ-102	1232	925	3540	---	---	---	1085.8	79.4	20	3	540
32 (800mm)	150	RF	1060	910	1990	---	---	---	977.9	41.3	28	1 1/2	290
	300	RF	1149	910	2200	---	---	---	1054.1	50.8	28	1 7/8	345
	600	RF/RJ-96	1194	990	3200	---	---	---	1079.5	60.3	28	2 1/4	430
	900	RF/RJ-103	1314	925	4900	---	---	---	1155.7	85.7	20	3 1/4	570

* Where Ring Joint Facing shown in End Facing, Stud lengths based on Ring Joint flange connection.

† Weights are for valve only and exclude mating flanges and bolting. Weight will vary according to corrosion allowance specification.

Type NZF & NAF

Installation Dimensions

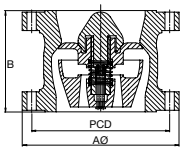

NZF

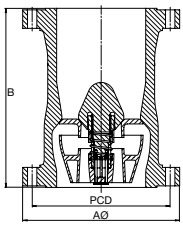

NAF

Flanges according to ASME B16.47 SERIES A (MSS SP44)

Size inches	Pressure Rating ASME	End Facing	A mm	Type NZF Standard Face-to-Face B mm	Type NZF Standard Face-to-Face † Valve Weight kg	Type NAF API 6D Face-to-Face B RF mm	Type NAF API 6D Face-to-Face B RJ mm	Type NAF API 6D Face-to-Face † Valve Weight kg	FLANGE DETAIL HOLE P.C.D. No.	FLANGE DETAIL HOLE DIA. mm	FLANGE DETAIL STUD SELECTION No.	FLANGE DETAIL STUD SELECTION DIA. Inches	FLANGE DETAIL STUD SELECTION *Length mm
36 (900mm)	150	RF	1168	1030	2300	1956	---	3556	1085.8	41.3	32	1 1/2	305
	300	RF	1270	1030	3100	2083	---	5727	1168.4	54.0	32	2	360
	600	RF/RJ-98	1314	1120	4100	2083	---	7261	1193.8	66.7	28	2 1/2	455
	900	RF/RJ-105	1461	1050	5900	---	---	---	1289.0	92.1	20	3 1/2	615
40 (1000mm)	150	RF	1289	1135	3400	---	---	---	1200.2	41.3	36	1 1/2	305
	300	RF	1238	1135	3900	---	---	---	1155.7	44.5	32	1 5/8	360
	600	RF	1321	1240	5400	---	---	---	1212.9	60.3	32	2 1/4	490
	900	RF	1511	1185	OA	---	---	---	1339.8	92.1	24	3 1/2	630
42 (1050mm)	150	RF	1346	1195	3600	---	---	---	1257.3	41.3	36	1 1/2	320
	300	RF	1289	1195	4100	---	---	---	1206.5	44.5	32	1 5/8	370
	600	RF	1403	1300	5800	---	---	---	1282.7	66.7	28	2 1/2	520
	900	RF	1562	1250	OA	---	---	---	1390.6	92.1	24	3 1/2	650
48 (1200mm)	150	RF	1511	1365	5200	---	---	---	1422.4	41.3	44	1 1/2	340
	300	RF	1467	1365	6000	---	---	---	1371.6	50.8	32	1 7/8	410
	600	RF	1594	1485	8800	---	---	---	1460.5	73.0	32	2 3/4	575
	900	RF	1785	1450	OA	---	---	---	1587.5	104.8	24	4	670

Flanges according to ASME B16.47 SERIES B (API 605)

Size inches	Pressure Rating ASME	End Facing	A mm	Type NZF Standard Face-to-Face B mm	Type NZF Standard Face-to-Face † Valve Weight kg	Type NAF API 6D Face-to-Face B RF mm	Type NAF API 6D Face-to-Face B RJ mm	Type NAF API 6D Face-to-Face † Valve Weight kg	FLANGE DETAIL HOLE P.C.D. No.	FLANGE DETAIL HOLE DIA. mm	FLANGE DETAIL STUD SELECTION No.	FLANGE DETAIL STUD SELECTION DIA. Inches	FLANGE DETAIL STUD SELECTION *Length mm
28 (700mm)	150	RF	837	800	1330	1448	---	1775	795.3	22.2	40	3/4	175
	300	RF	921	800	1800	1499	---	2535	857.2	34.9	36	1 1/4	290
	600	RF/RJ-94	953	870	2450	1600	1613	3705	863.6	47.6	28	1 3/4	395
	900	RF/RJ-101	1105	860	2890	---	---	---	971.6	73.0	20	2 3/4	515
30 (750mm)	150	RF	887	855	1590	1524	---	2080	846.1	22.2	44	3/4	175
	300	RF	991	855	2150	1594	---	3250	920.8	38.1	36	1 3/8	305
	600	RF/RJ-95	1022	930	2570	1651	1664	4472	927.1	50.8	28	1 7/8	420
	900	RF/RJ-102	1181	925	3540	---	---	---	1035.0	79.4	20	3	545
32 (800mm)	150	RF	941	910	1990	---	---	---	900.1	22.2	48	3/4	175
	300	RF	1054	910	2200	---	---	---	977.9	41.3	32	1 1/2	330
	600	RF/RJ-96	1086	990	3200	---	---	---	984.2	54.0	28	2	440
	900	RF/RJ-103	1238	925	4900	---	---	---	1092.2	79.4	20	3	555
36 (900mm)	150	RF	1057	1030	2300	1956	---	3062	1009.6	25.4	44	7/8	195
	300	RF	1172	1030	3100	2083	---	5285	1089.0	44.5	32	1 5/8	340
	600	RF/RJ-98	1213	1120	4100	2083	---	6832	1104.9	60.3	28	2 1/4	480
	900	RF/RJ-105	1346	1050	5900	---	---	---	1200.2	79.4	24	3	585
40 (1000mm)	150	RF	1175	1135	3400	---	---	---	1120.8	28.6	44	1	210
	300	RF	1273	1135	3900	---	---	---	1190.6	44.5	40	1 5/8	365
42 (1050mm)	150	RF	1226	1195	3600	---	---	---	1171.6	28.6	48	1	215
	300	RF	1334	1195	4100	---	---	---	1244.6	47.6	36	1 3/4	375
48 (1200mm)	150	RF	1392	1365	5200	---	---	---	1335.1	31.8	44	1 1/8	235
	300	RF	1511	1365	6000	---	---	---	1416.0	50.8	40	1 7/8	400

* Where Ring Joint Facing shown in End Facing, Stud lengths based on Ring Joint flange connection.

† Weights are for valve only and exclude mating flanges and bolting. Weight will vary according to corrosion allowance specification.

GOODWIN
INTERNATIONAL LTD

Ring Disc
Type NC

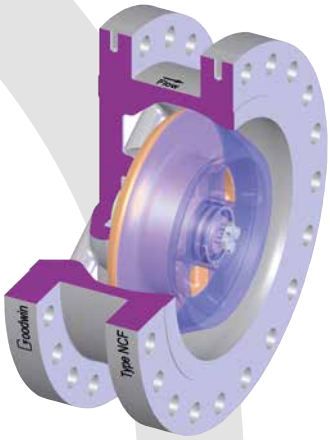

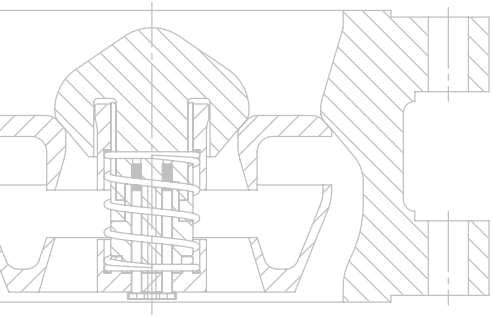

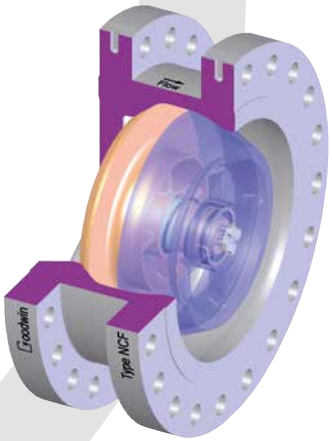

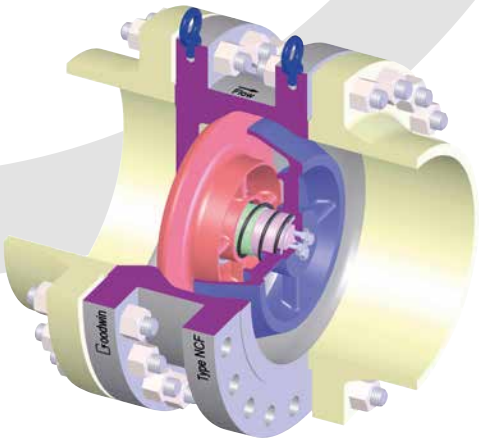

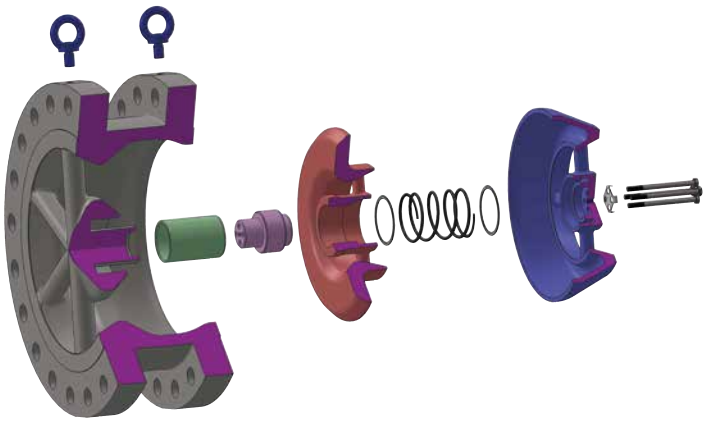

The NC is the compact model of the centrally guided ring disc design. With its short face-to-face and reduced weight, the compact NC is a lower cost solution to the NZ when marginally higher pressure drops can be accepted.

Features
- Suitable for all gaseous fluids
- Non-slam closure
- Low pressure loss
- Metal sealing
- Short face-to-face length
- Maintenance free
- Valve design to ASME B16.34

End Connections Available
- Flanged
- Hub End
- Solid Lug
- Buttweld
- Wafer
- Compact Flange

TYPE NK
Goodwin Standard Compact Face-to-Face Dimensions (standard valves for 12" and above)

Type NCF

Installation Dimensions

Flanges according to ASME B16.5 / ASME B16.47 SERIES A

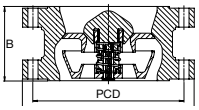

Size inches	Pressure Rating ASME	End Facing	A mm	B mm	Valve Weight kg	FLANGE DETAIL HOLE P.C.D. No.	HOLE DIA. mm	STUD SELECTION No.	DIA. Inches	*Length mm
12 (300mm)	150	RF	483	181	105	431.8	25.4	12	7/8	150
	300	RF	521	181	155	450.8	31.8	16	1 1/8	205
	600	RF/RJ-57	559	229	240	489.0	34.9	20	1 1/4	255
	900	RF/RJ-57	610	310	380	533.4	38.1	20	1 3/8	285
14 (350mm)	150	RF	533	222	160	476.3	28.6	12	1	165
	300	RF	584	222	230	514.4	31.8	20	1 1/8	210
	600	RF/RJ-61	603	273	320	527.0	38.1	20	1 3/8	265
	900	RF/RJ-62	641	356	440	558.8	41.3	20	1 1/2	310
16 (400mm)	150	RF	597	245	230	539.8	28.6	16	1	170
	300	RF	648	245	340	571.5	34.9	20	1 1/4	220
	600	RF/RJ-65	686	305	440	603.2	41.3	20	1 1/2	285
	900	RF/RJ-66	705	384	580	616.0	44.5	20	1 5/8	325
18 (450mm)	150	RF	635	264	260	577.9	31.8	16	1 1/8	180
	300	RF	711	264	350	628.6	34.9	24	1 1/4	230
	600	RF/RJ-69	743	362	570	654.0	44.5	20	1 5/8	305
	900	RF/RJ-70	787	420	800	685.8	50.8	20	1 7/8	365
20 (500mm)	150	RF	699	305	350	635.0	31.8	20	1 1/8	190
	300	RF	775	305	510	685.8	34.9	24	1 1/4	240
	600	RF/RJ-73	813	368	740	723.9	44.5	24	1 5/8	325
	900	RF/RJ-74	857	430	900	749.3	54.0	20	2	385
24 (600mm)	150	RF	813	370	560	749.3	34.9	20	1 1/4	205
	300	RF	914	370	780	812.8	41.3	24	1 1/2	265
	600	RF/RJ-77	940	438	1120	838.2	50.8	24	1 7/8	365
	900	RF/RJ-78	1041	495	1650	901.7	66.7	20	2 1/2	485
28 (700mm)	150	RF	927	430	820	863.6	34.9	28	1 1/4	255
	300	RF	1035	430	1250	939.8	44.5	28	1 5/8	305
	600	RF/RJ-93	1073	480	1600	965.2	54.0	28	2	405
	900	RF/RJ-100	1168	540	2250	1022.4	79.4	20	3	525
30 (750mm)	150	RF	984	460	950	914.4	34.9	28	1 1/4	260
	300	RF	1092	460	1330	997.0	47.6	28	1 3/4	325
	600	RF/RJ-95	1130	505	1760	1022.4	54.0	28	2	410
	900	RF/RJ-102	1232	560	2600	1085.8	79.4	20	3	540
32 (800mm)	150	RF	1060	500	1090	977.9	41.3	28	1 1/2	290
	300	RF	1149	500	1500	1054.1	50.8	28	1 7/8	345
	600	RF/RJ-96	1194	584	2100	1079.5	60.3	28	2 1/4	430
	900	RF/RJ-103	1314	OA	OA	1155.7	85.7	20	3 1/4	570

* Where Ring Joint Facing shown in End Facing, Stud lengths based on Ring Joint flange connection.

Type NCF

Installation Dimensions

Flanges according to ASME B16.5 / ASME B16.47 SERIES A

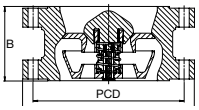

Size inches	Pressure Rating ASME	End Facing	A mm	B mm	Valve Weight kg	FLANGE DETAIL HOLE P.C.D. No.	HOLE DIA. mm	STUD SELECTION No.	DIA. Inches	*Length mm
36 (900mm)	150	RF	1168	560	1600	1085.8	41.3	32	1 1/2	305
	300	RF	1270	560	2100	1168.4	54.0	32	2	360
	600	RF/RJ-98	1314	635	2800	1193.8	66.7	28	2 1/2	455
	900	RF/RJ-105	1461	690	4700	1289.0	92.1	20	3 1/2	615
40 (1000mm)	150	RF	1289	650	2100	1200.2	41.3	36	1 1/2	320
	300	RF	1238	650	2120	1155.7	44.5	32	1 5/8	370
	600	RF	1321	820	3200	1212.9	60.3	32	2 1/4	520
	900	RF	1511	970	6400	1339.8	92.1	24	3 1/2	650
42 (1050mm)	150	RF	1346	670	2500	1257.3	41.3	36	1 1/2	320
	300	RF	1289	720	2600	1206.5	44.5	32	1 5/8	370
	600	RF	1403	870	4100	1282.7	66.7	28	2 1/2	520
	900	RF	1562	1100	6700	1390.6	92.1	24	3 1/2	650
48 (1200mm)	150	RF	1511	740	3300	1422.4	41.3	44	1 1/2	340
	300	RF	1467	840	3600	1371.6	50.8	32	1 7/8	410
	600	RF	1594	970	5850	1460.5	73.0	32	2 3/4	575
	900	RF	1785	1200	8300	1587.5	104.8	24	4	670

* Where Ring Joint Facing shown in End Facing, Stud lengths based on Ring Joint flange connection.

Flanges according to ASME B16.47 SERIES B

Size inches	Pressure Rating ASME	End Facing	A mm	B mm	Valve Weight kg	FLANGE DETAIL HOLE P.C.D. No.	HOLE DIA. mm	STUD SELECTION No.	DIA. Inches	*Length mm
28 (700mm)	150	RF	837	430	820	795.3	22.2	40	3/4	175
	300	RF	921	430	960	857.2	34.9	36	1 1/4	290
	600	RF/RJ-94	953	480	1600	863.6	47.6	28	1 3/4	395
	900	RF/RJ-101	1105	540	2250	971.6	73.0	20	2 3/4	515
30 (750mm)	150	RF	887	460	950	846.1	22.2	44	3/4	175
	300	RF	991	460	1330	920.8	38.1	36	1 3/8	305
	600	RF/RJ-95	1022	505	1760	927.1	50.8	28	1 7/8	420
	900	RF/RJ-102	1181	560	2600	1035.0	79.4	20	3	545
32 (800mm)	150	RF	941	500	1090	900.1	22.2	48	3/4	175
	300	RF	1054	500	1500	977.9	41.3	32	1 1/2	330
	600	RF/RJ-96	1086	584	2100	984.2	54.0	28	2	440
	900	RF/RJ-103	1238	OA	OA	1092.2	79.4	20	3	555
36 (900mm)	150	RF	1057	560	1600	1009.6	25.4	44	7/8	195
	300	RF	1172	560	2100	1089.0	44.5	32	1 5/8	340
	600	RF/RJ-98	1213	635	2800	1104.9	60.3	28	2 1/4	480
	900	RF/RJ-105	1346	690	4700	1200.2	79.4	24	3	585
40 (1000mm)	150	RF	1175	650	2100	1120.8	28.6	44	1	210
	300	RF	1273	650	2120	1190.6	44.5	40	1 5/8	365
42 (1050mm)	150	RF	1226	670	2500	1171.6	28.6	48	1	215
	300	RF	1334	720	2600	1244.6	47.6	36	1 3/4	375
48 (1200mm)	150	RF	1392	740	3300	1335.1	31.8	44	1 1/8	235
	300	RF	1511	840	3600	1416.0	50.8	40	1 7/8	400

* Where Ring Joint Facing shown in End Facing, Stud lengths based on Ring Joint flange connection.

Axial Check Valves

Pressure Loss / Flow Coefficient (C_V)

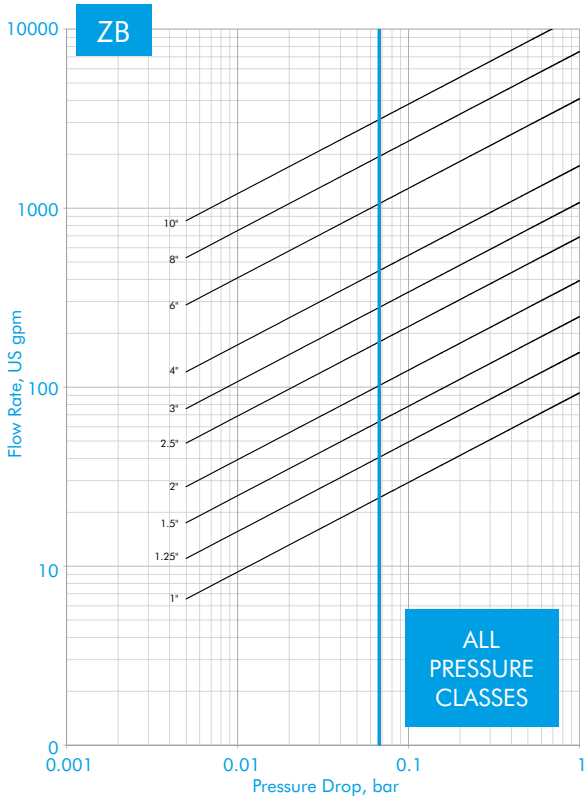

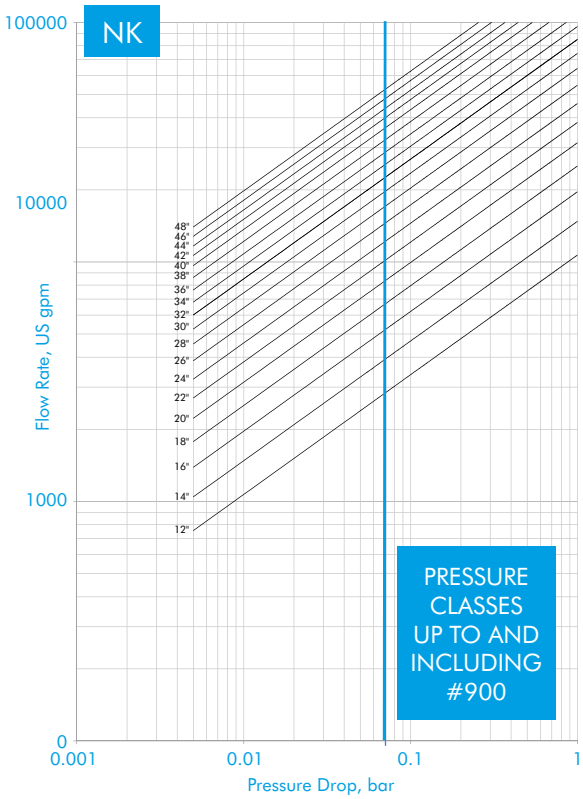

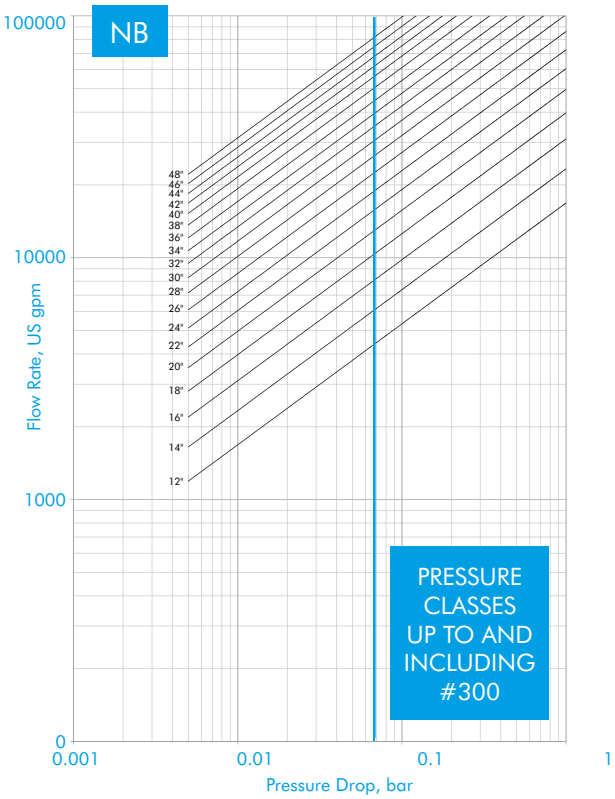

Pressure drop versus flow, as depicted in the above graphs, have been established following tests carried out at Delft Hydraulics Laboratories.

The flow curves do not show the full Goodwin range. Upon request Goodwin can manufacture valves in sizes up to 88" diameter and in pressure classes up to API 20000.

Critical Velocity

All check valves should be used in the fully open position. This means that the force provided by the flowing fluid must be greater than the force from the spring(s). This velocity is known as the "Critical Velocity", i.e. that fluid velocity required to keep the plates or disc of a valve fully open.

If the fully open position is not reached any pressure drop calculations would be invalid as the C_V of a valve is determined on the basis of the valve being fully open. With the valve plates or disc only partially open, i.e. the flow velocity being less than the critical velocity of the valve, then a higher pressure drop will exist than would otherwise be calculated.

Goodwin offers a range of spring options requiring different critical velocities to ensure a fully open valve can be selected to suit customer flow data that will be both chatter-free and provide excellent dynamics. All Critical Velocities in the tables are for water. When the fluid is gaseous an energy balance can be applied to convert the media velocity to a water equivalent velocity.

For valves that are installed in a vertical flow up or inclined up position, it must be borne in mind that the fluid velocity must be sufficient to overcome the weight vector of the plates/disc in addition to the Critical Velocity of the spring.

For flow velocities different to those on the right, please consult Goodwin. Other spring strengths are available.

Dual Plate Check Valve Springs

Spring	Critical Velocity
Mini-Torque	1.5 m/s
Low Torque	2.0 m/s
High Torque (Standard)	3.0 m/s
Super Torque	4.4 m/s

Axial Check Valve Springs

Spring	Critical Velocity
#1	1.5 m/s
#2	2.0 m/s
#3	2.5 m/s
#4	3.0 m/s

$$v_{Water,equivalent} = v_{Medium}\sqrt{\frac{\rho_{Medium}}{\rho_{Water}}}$$

Chatter / Flutter

Chatter or flutter will occur when the forward flow is insufficient to fully open the valve plates/disc, i.e. flow through the valve is less than the critical velocity of the valve. Chatter/Flutter will ultimately lead to premature failure of a valve's internal components. A correctly sized check valve should be fully open when operating in forward flow.

To ensure a valve is fully open, the flow through the valve must exceed the 'critical velocity'. The spring must be chosen such that it is weaker than the flow through the valve, otherwise the valve will be only partially open.

Pressure Surge

A check valve closing against a rapidly moving reverse-flowing liquid induces a pressure rise in the downstream region of the line at the moment of closure.

This pressure rise can become large and result in a surge of high pressure moving back down the line as a shock wave.

The magnitude of this pressure was characterised by Joukowsky as:

$$\Delta P_{SURGE} = \frac{\rho \cdot c \cdot v_r}{1 \times 10^5}$$

Where ΔP is the maximum surge pressure (bar), r is the media density (kg/m³), c is the celerity (velocity of sound in the line, m/s), v_r is the maximum reverse velocity of the fluid (m/s).

The Phenomenon of Surge

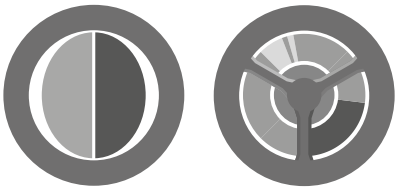

Closing a valve against a moving body of fluid results in pressure pulses. These pulses become stronger as the magnitude of the velocity change increases. A common example of this is when a check valve closes following a pump trip. The pressure pulse can be high and is known as surge or water-hammer.

Whereas surge is the phenomenon of the advancing pressure wave, the term 'slam' relates more specifically to the valve itself, which can be the root cause of the surge. Valve slam occurs after a pump stops when the forward flow decelerates, reverses and accelerates back towards the pump. The check valve must close quickly before the reverse velocity is too high, in order to minimise the surge pressure and protect the line.

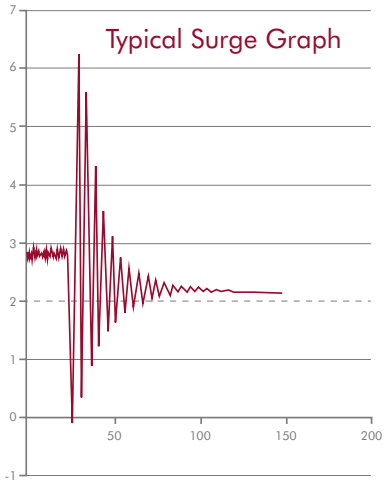

Surge Mitigation

Extensive research has been conducted (Prof. A.R.D. Thorley) into the dynamic response of all types of check valves. It has been found that slam can be reduced by improving the dynamic response of the valve. This is achieved by ensuring that:

- The disc has low inertia and friction
- The travel of the disc is short
- The closure of the disc is assisted with springs

By meeting these requirements, Goodwin provide a range of non-slam check valves to suit up to the most severe of customer requirements.

Swing Check

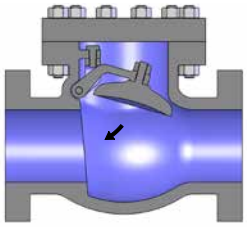

Low Inertia	No
Minimal Travel	No
Mechanical Assistance	No

Dual Plate Check

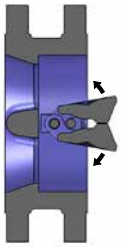

Low Inertia	Yes
Minimal Travel	No
Mechanical Assistance	Yes

Axial Check

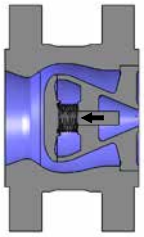

Low Inertia	Yes
Minimal Travel	Yes
Mechanical Assistance	Yes

Valve Selection

The magnitude of the surge pressure can be approximated using the Joukowsky equation (See 'Pressure Surge'). A valve can then be selected based upon the severity of the system into which it is installed (how high the system deceleration).

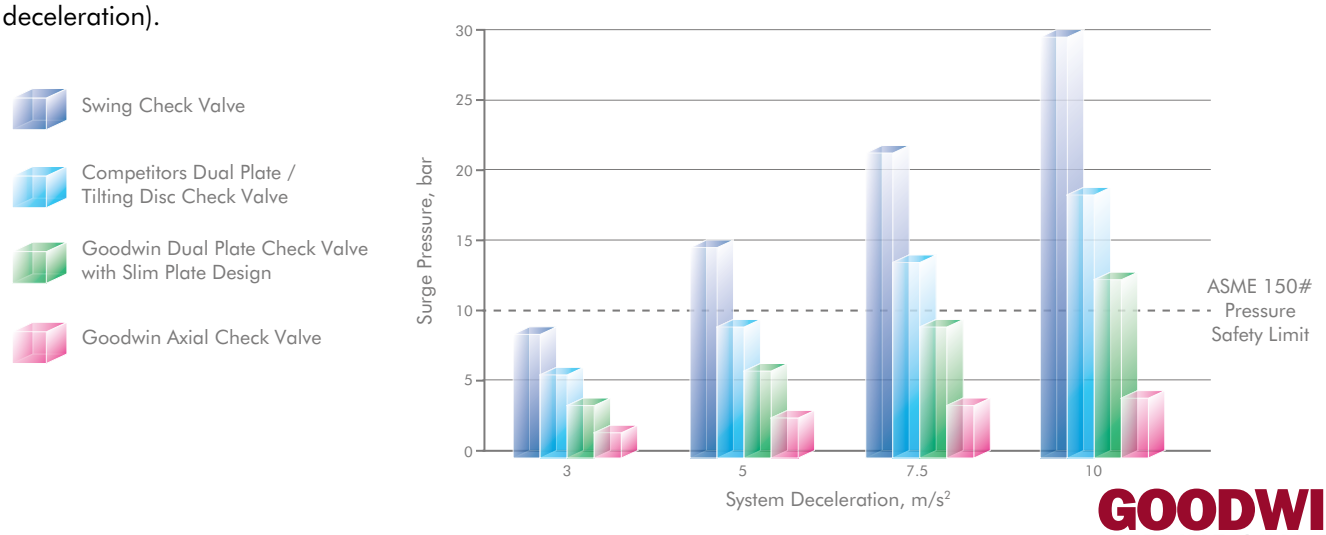

GOODWIN INTERNATIONAL LTD

Check Valve Selection based upon System Deceleration Characteristic

Check Valve Types

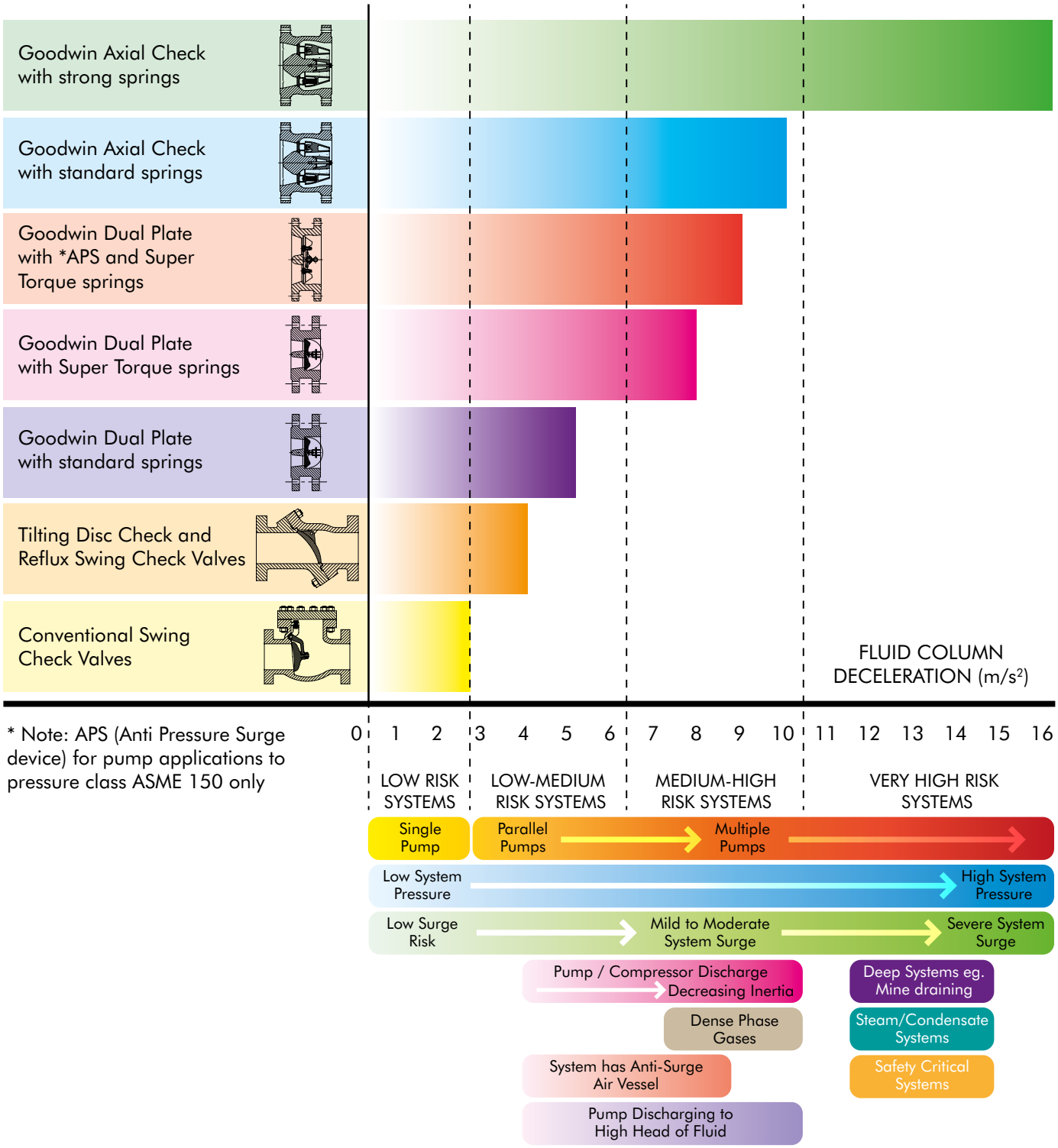

* Note: APS (Anti Pressure Surge device) for pump applications to pressure class ASME 150 only

The above check valve selections and information are for guidance only. Please consult Goodwin for Check Valve applications.

Total Life Cycle Costs

As fluid passes through a check valve there will be a drop in pressure. To maintain the flow-rate, the pump will need to compensate for this pressure loss by working harder.

Today, energy cost is a prime concern for all plant manufacturers – the below analysis shows why a low pressure drop check valve should be considered for long-term economic benefit.

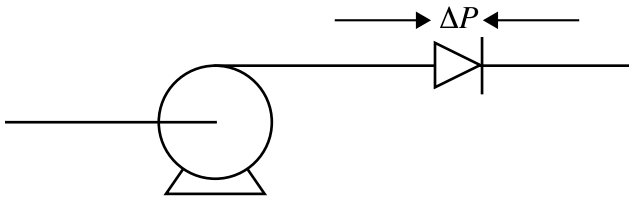

		SWING CHECK	COMPETITOR DUAL PLATE	GOODWIN DUAL PLATE	GOODWIN AXIAL
Check Valve Size	mm	DN400	DN400	DN400	DN400
ΔP Coefficient	ξ	1.21	1.05	0.81	0.83
Pipe Velocity, v	m/s	3.00	3.00	3.00	3.00
Flow Rate, Q	m^3/s	0.342	0.342	0.342	0.342
Pressure Loss, ΔP	Pa	5551	4817	3716	3807
Pump Power, P	kW	2.5313	2.1966	1.6945	1.7360
Energy Cost /Year	$	2,430	2,109	1,627	1,667
Life Cycle Cost	$	48,600	42,180	32,540	33,340

Area of Sch. 40 DN400 Pipe $=0.1140m^2$

Pipe velocity = Critical velocity (3.0m/s)

$Q = Av = 0.1140 \times 3.0 = 0.342m^3/s$

$$\Delta P = {10000\xi v^2}/{2g}$$

$$P = {Q}/{1000} \cdot {\Delta P}/{\eta} \quad (\eta = \text{efficiency} = 0.75)$$

Cost = P x Cost/yr x hrs/yr*
= Annual Cost x 20 years

Energy Cost = 0.12 $/kWh
8000 hrs/year

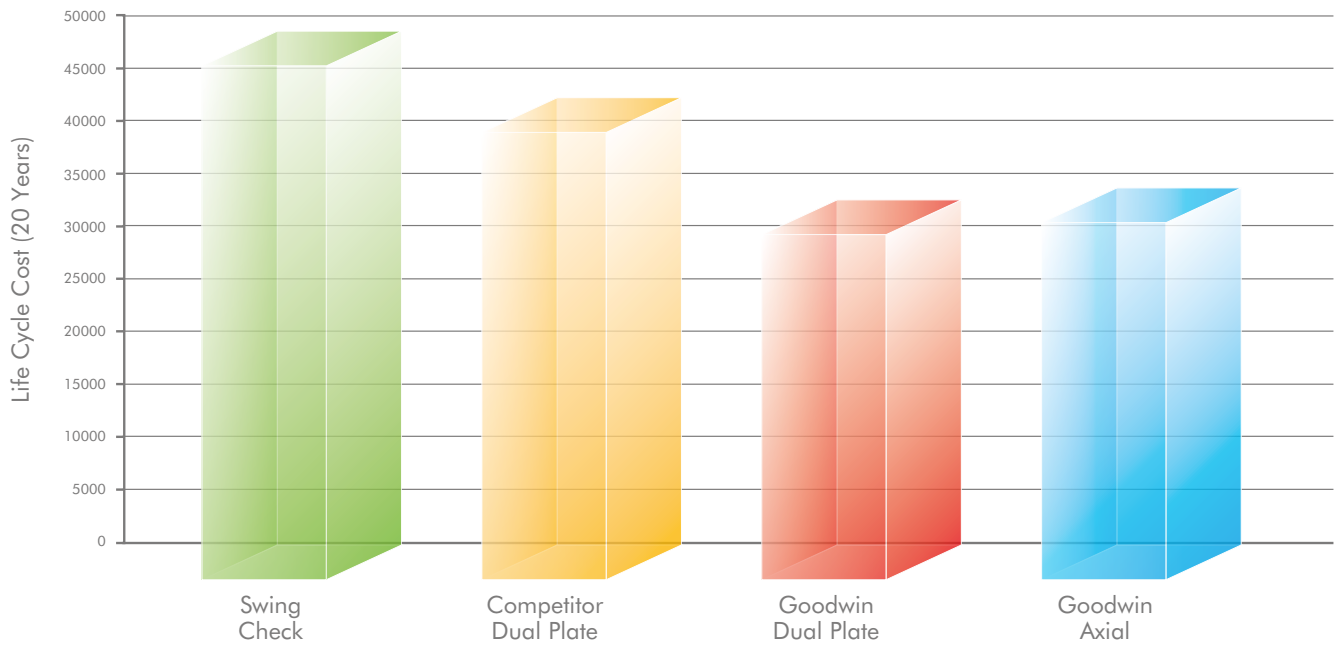

Some swing check valves appear to offer higher Cv values and, therefore, lower pressure losses. However, such pressure losses are only achieved when the valve is 100% open which invariably requires a high fluid velocity – a consequence of which is high system pressure loss. Reducing the flowrate to address this problem causes the valve to partially close resulting in severe valve pressure drop, whereas the Goodwin Dual Plate and Axial Check Valves would still be 100% open and performing well.

With swing check valves other issues arise in high velocity systems - such as slam and water hammer.

Axial Check Valves
Best Practice Valve Installation

Piping components such as pumps, compressors, valves, reducers, bends, elbows create turbulence in a flow stream. To maximise the life of a Axial Check Valve, it should be installed in accordance with industrial best practice i.e. a sufficient distance from turbulence sources to ensure the valve is in fully developed flow. Examples of recommended best practice installation for Axial Check Valves are:

Horizontal Flow

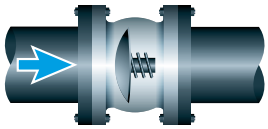

Type Z solid disc shown.
Also applicable to the N type Ring Disc.

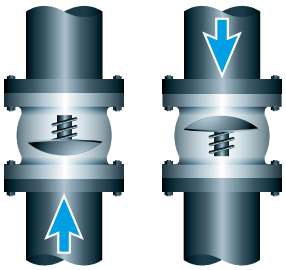

Vertical Flow

Valves suitable for vertical flow up and down.

For vertical flow please contact Goodwin International with process conditions.

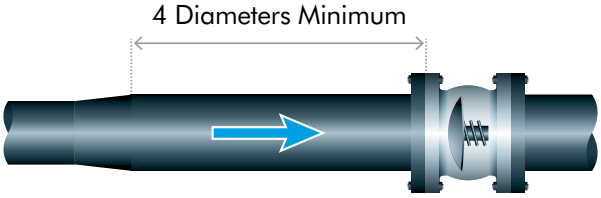

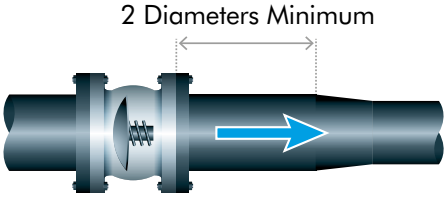

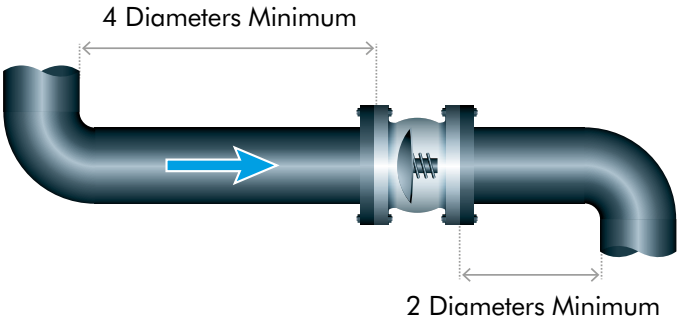

Check Valve should be installed a minimum of 4 diameters downstream of a reducer/ expander or bend to ensure flow at valve is fully developed and turbulence is minimised.

Check Valve should be installed a minimum of 2 diameters upstream of a reducer or bend to avoid choked flow, which would cause the valve to only partially open.

When installed near a throttling valve, the check valve should be installed a minimum of 3 diameters downstream, or 2 diameters upstream, of the throttling valve.

Check Valves can be close coupled upstream or downstream of non-throttling isolation valve (e.g. Full Port Ball Valves).

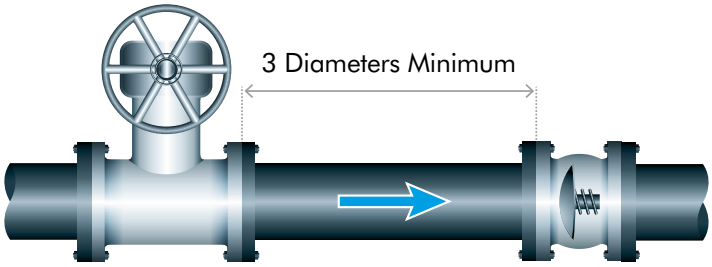

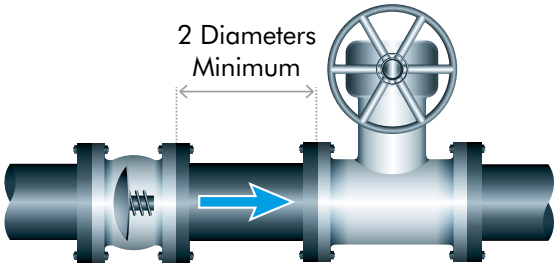

Note: Goodwin Check Valves are not piggable

Indicates direction of flow

Material Specifications

	ASTM GRADE	MATERIAL DESCRIPTION	MIN UTS (Nmm²)	MIN UTS (ksi)	MIN YIELD (Nmm²)	MIN YIELD (ksi)	MINIMAL IMPACT (J)	PREn Δ	NOMINAL COMPOSITION C	Cr	Ni	Mo	Cu	N	v	W	Nb
GENERAL PURPOSE	A216 WCB	Carbon Steel	485	70	250	36	-	-	0.23	-	-	-	-	-	-	-	-
	A105	Forged Carbon Steel	485	70	250	36	-	-	0.23	-	-	-	-	-	-	-	-
	B148 C95800	Aluminium Bronze	600	87	250	36	-	-	-	-	4.5	-	79min	-	-	-	-
	A487 4C	Low Alloy Steel	620	90	415	60	-	-	0.20	0.5	0.5	0.25	-	-	-	-	-
LOW TEMP	A352 LCB	Low Temp Carbon Steel	450	65	240	35	27@ -46°C (-50°F)	-	0.23	-	-	-	-	-	-	-	-
	A352 LCC	Low Temp Carbon Steel	485	70	275	40	27@ -46°C (-50°F)	-	0.23	-	-	-	-	-	-	-	-
	A350 LF2	Low Temp Carbon Steel	485	70	250	36	27@ -46°C (-50°F)	-	0.23	-	-	-	-	-	-	-	-
	A352 LC3	Low Temp Alloy Steel	485	70	275	40	27@ -101°C (-150°F)	-	0.10	-	3.5	-	-	-	-	-	-
	A351 CF8M	Cryogenic Stainless Steel	485	70	205	30	80@ -196°C (-320°F)	27	0.08*	19	10	2.50	-	-	-	-	-
	A351 CF3M	Cryogenic Stainless Steel	485	70	205	30	80@ -196°C (-320°F)	27	0.03*	19	10	2.50	-	-	-	-	-
HIGH TEMP	A217 WC6	Chrome Molybdenum Steel	485	70	275	40	-	-	0.10	1.25	-	0.50	-	-	-	-	-
	A217 C5	Chrome Molybdenum Steel	620	90	415	60	-	-	0.10	5.0	-	0.50	-	-	-	-	-
	A217 C12	Chrome Molybdenum Steel	620	90	415	60	-	-	0.10	9.0	-	1.00	-	-	-	-	-
	A217 C12A	Chrome Molybdenum Steel	585	85	415	60		-	0.10	9.0	-	1.0	-	0.05	0.20	-	0.8
	A351 CF8M	Stainless Steel	485	70	205	30	-	27	0.08*	19	10	2.50	-	-	-	-	-
	A351 CF8C	Stainless Steel	485	70	205	30	-	20	0.08*	19	10	0.5*	-	-	-	-	8 x C
HARD WEARING	A217 CA15	Chrome Stainless Steel	620	90	450	65	-	-	0.10	13	-	-	-	-	-	-	-
	A487 CA6NM	Low Temp Chrome Stainless Steel	760	110	515	80	-	-	0.03	13	4.5	0.75	-	-	-	-	-
CORROSION RESISTANT MATERIAL	A351 CF8M	Stainless Steel	495	70	205	30	-	27	0.08*	19	10	2.5	-	-	-	-	-
	A890 4A & A995 4A	Duplex 22% Cr	620	90	415	60	45 @ -40°C (-40°F)	34	0.03*	22	5.5	3	-	0.15	-	-	-
	A890 5A & A995 5A	Super Duplex 25% Cr	690	100	515	75	45 @ -50°C (-58°F)	-	0.03*	25	7.5	4.5	-	0.25	-	-	-
	A890 6A & A995 6A	Super Duplex 25% Cr	690	100	450	65	-	41	0.03*	25	7.5	3.5	0.75	0.25	-	0.75	-
	A351 CK3MCuN	Super Austenitic	550	80	260	38	-	44	0.025*	20	18	6.5	0.75	0.2	-	-	-
	A494-M35-2	Monel	450	65	205	30	-	-	0.35*	-	BAL	-	30	-	-	-	0.5*
	A494 CU5MCuN	High Nickel 825	520	75	240	35	-	-	0.03	21	41	3	2	-	-	-	0.9
	A494 CW-6MC	High Nickel 625	485	70	275	40	-	-	0.03	21	62	9	-	-	-	-	3.5
	A494 CW-12MW	Hastelloy® C276	495	72	275	40	-	-	0.03	16	57	17	-	-	0.35	4	-
	A494 N-7M	Hastelloy® B2	525	76	275	40	-	-	0.03	1*	67	32	-	-	-	-	-
	A494 CX2MW	Hastelloy® C22	550	80	280	45	-	-	0.02*	22	56	13	-	-	0.3	3	-
	B367C2/B348Gr.2	Titanium	345	50	275	40	-	-	0.10*	-	-	-	-	-	-	-	-

* Max

Δ PREn = Pitting Resistance Equivalent number

ASME B16.34 Pressure/Temperature Ratings

Maximum Non-Shock Working Pressure (Standard Class) Bar

Temperature °C	150				300				600			
	A216 WCB / A105	A352 LCC	A350 LF2	A217 WC6	A216 WCB / A105	A352 LCC	A350 LF2	A217 WC6	A216 WCB / A105	A352 LCC	A350 LF2	A217 WC6
-29 to 38	19.6	19.8	19.6	19.8	51.1	51.7	51.1	51.7	102.1	103.4	102.1	103.4
50	19.2	19.5	19.2	19.5	50.1	51.7	50.1	51.7	100.2	103.4	100.2	103.4
100	17.7	17.7	17.7	17.7	46.6	51.5	46.6	51.5	93.2	103.0	93.2	103.0
150	15.8	15.8	15.8	15.8	45.1	50.2	45.1	49.7	90.2	100.3	90.2	99.5
200	13.8	13.8	13.8	13.8	43.8	48.6	43.8	48.0	87.6	97.2	87.6	95.9
250	12.1	12.1	12.1	12.1	41.9	46.3	41.9	46.3	83.9	92.7	83.9	92.7
300	10.2	10.2	10.2	10.2	39.8	42.9	39.8	42.9	79.6	85.7	79.6	85.7
350	8.4	8.4	8.4	8.4	37.6	40.0	37.6	40.3	75.1	80.0	75.1	80.4
400	6.5	6.5	6.5	6.5	34.7	34.7	34.7	36.5	69.4	69.4	69.4	73.3
450	4.6	4.6	4.6	4.6	23.0	23.0	23.0	33.7	46.0	46.0	46.0	67.7
500	2.8	2.8	2.8	2.8	11.8	11.6	11.8	25.7	23.5	23.2	23.5	51.5
538	1.4	1.4	1.4	1.4	5.9	5.9	5.9	14.9	11.8	11.8	11.8	29.8

Temperature °C	900				1500				2500			
	A216 WCB / A105	A352 LCC	A350 LF2	A217 WC6	A216 WCB / A105	A352 LCC	A350 LF2	A217 WC6	A216 WCB / A105	A352 LCC	A350 LF2	A217 WC6
-29 to 38	153.2	155.1	153.2	155.1	255.3	258.6	255.3	258.6	425.5	430.9	425.5	430.9
50	150.4	155.1	150.4	155.1	250.6	258.6	250.6	258.6	417.7	430.9	417.7	430.9
100	139.8	154.6	139.8	154.4	233.0	257.6	233.0	257.4	388.3	429.4	388.3	429.0
150	135.2	150.5	135.2	149.2	225.4	250.8	225.4	248.7	320.8	418.1	375.6	414.5
200	131.4	145.8	131.4	143.9	219.0	243.2	219.0	239.8	365.0	405.4	365.0	399.6
250	125.8	139.0	125.8	139.0	209.7	231.8	209.7	231.8	349.5	386.2	349.5	386.2
300	119.5	128.6	119.5	128.6	199.1	214.4	199.1	214.4	331.8	357.1	331.8	357.1
350	112.7	120.1	112.7	120.7	187.8	200.1	187.8	201.1	313.0	333.5	313.0	335.3
400	104.2	104.2	104.2	109.8	173.6	173.6	173.6	183.1	289.3	289.3	289.3	304.9
450	69.0	69.0	69.0	101.4	115.0	115.0	115.0	169.0	191.7	191.7	191.7	281.8
500	35.3	35.3	35.3	77.2	58.0	57.9	58.8	128.6	97.9	96.5	97.9	214.4
538	17.7	17.7	17.7	44.7	29.5	29.5	29.5	74.5	49.2	49.2	49.2	124.1

Temperature °C	150				300				600			
	A351 CF8M / CF3M	A351 CF8C	A995 4A A995 6A	A494 CW6MC 625 ALLOY*	A351 CF8M / CF3M CF3M	A351 CF8C	A995 4A A995 6A	A494 CW6MC 625 ALLOY*	A351 CF8M / CF3M A351	A351 CF8C	A995 4A A995 6A	A494 CW6MC 625 ALLOY*
-29 to 38	19.0	19.0	20.0	20.0	49.6	49.6	51.7	51.7	99.3	99.3	103.4	103.4
50	18.4	18.7	19.5	19.5	48.1	48.8	51.7	51.7	96.2	97.5	103.4	103.4
100	16.2	17.4	17.7	17.7	42.2	45.3	50.7	51.5	84.4	90.6	101.3	103.0
150	14.8	15.8	15.8	15.8	38.5	42.5	45.9	50.3	77.0	84.9	91.9	100.3
200	13.7	13.8	13.8	13.8	35.7	39.9	42.7	48.3	71.3	79.9	85.3	96.7
250	12.1	12.1	12.1	12.1	33.4	37.8	40.5	46.3	66.8	75.6	80.9	92.7
300	10.2	10.2	10.2	10.2	31.6	36.1	38.9	42.9	63.2	72.2	77.7	85.7
350	8.4	8.4	-	8.4	30.3	34.8	-	40.3	60.7	69.5	-	80.4
400	6.5	6.5	-	6.5	29.4	33.9	-	36.5	58.9	67.8	-	73.3
450	4.6	4.6	-	4.6	28.8	33.5	-	33.7	57.7	66.9	-	67.7
500	2.8	2.8	-	2.8	28.2	28.2	-	28.2	56.5	56.5	-	56.5
538	1.4	1.4	-	1.4	25.2	25.2	-	25.2	50.0	50.0	-	50.0

Temperature °C	900				1500				2500			
	A351 CF8M / CF3M	A351 CF8C	A995 4A A995 6A	A494 CW6MC 625 ALLOY*	A351 CF8M / CF3M	A351 CF8C	A995 4A A995 6A	A494 CW6MC 625 ALLOY*	A351 CF8M / CF3M	A351 CF8C	A995 4A A995 6A	A494 CW6MC 625 ALLOY*
-29 to 38	148.9	148.9	155.1	155.1	248.2	248.2	258.6	258.6	413.7	413.7	430.9	430.9
50	144.3	146.3	155.1	155.1	240.6	243.8	258.6	258.6	400.9	406.4	430.9	430.9
100	126.6	135.9	152.0	154.6	211.0	226.5	253.3	257.6	351.6	377.4	422.2	429.4
150	115.5	127.4	137.8	150.6	192.5	212.4	229.6	250.8	320.8	353.9	382.7	418.2
200	107.0	119.8	128.0	145.0	178.3	199.7	213.3	241.7	297.2	332.8	355.4	402.8
250	100.1	113.4	121.4	139.0	166.9	189.1	202.3	231.8	278.1	315.1	337.2	386.2
300	94.9	108.3	116.6	128.6	158.1	180.4	194.3	214.4	263.5	300.7	323.8	357.1
350	91.0	104.3	-	120.7	151.6	173.8	-	201.1	252.7	289.6	-	335.3
400	88.3	101.7	-	109.8	147.2	169.5	-	183.1	245.3	282.6	-	304.9
450	86.5	100.4	-	101.4	144.2	167.3	-	169.0	240.4	278.8	-	281.8
500	84.7	84.7	-	84.7	140.9	140.9	-	140.9	235.0	235.0	-	235.0
538	75.2	75.2	-	75.2	125.5	125.5	-	125.5	208.9	208.9	-	208.9

* Extrapolations from materials with similar CR/NI/MO content

Large Diameter Check Valves

Goodwin specialises in the manufacture of large diameter valves being capable of manufacturing both its Dual Plate Check Valve and the Axial Check Valve in sizes to 144" and 88" respectively in all materials and in all relevant pressure classes.

Applicable Flange Standards

26" - 60": ASME B16.47 Series A
ASME B16.47 Series B

66" - 144": AWWA C207 Class B, D, E & F
(Flat Face flanges)
Taylor Forge (Raised Face flanges)
or
Customer agreed flange design

52" 300# Axial Check Valve Type NKF

Large diameter check valves are utilised throughout the hydrocarbon, energy and process industries in a wide variety of applications. Goodwin Check Valves are in service in applications ranging from potable water and seawater to hydrocarbon gas and LNG in materials such as Carbon Steel, Aluminium Bronze, Duplex Stainless Steel and CF8M Stainless Steel.

Typical Goodwin Large Diameter Check Valve Applications

- Pipelines: Extensive use in the compressor stations and pumping stations of many of the world's cross-country and country-to-country pipelines. Many for the transportation of energy and traversing 1000s of kilometres, by their nature these pipelines are critical - Goodwin Check Valves are selected for their reliability and high performance.
- Ethylene Centrifugal Compressor Trains: Employed on the discharge of each compressor stage, Goodwin Check Valves prevent any potential for backflow to protect compressors against reverse rotation and over pressurisation and the consequent mechanical damage.
- LNG: Especially used within the liquefaction plants, large diameter Goodwin Check Valves are in service at -161°C

84" 150# Dual Plate Check Valve

- Seawater intake line and seawater discharge pumps: Used on the discharge of the pumps, Goodwin Check Valves protect the pumps against reverse rotation and the consequential mechanical damage.

Cryogenic Valves

Goodwin International has its own in-house cryogenic test facility where it is capable of pressure testing at temperatures from ambient temperature down to -196°C.

Cryogenic testing is conducted by immersing the valve in Liquid Nitrogen to cool to the desired temperature which is monitored and recorded at a number of locations on the valve, both internally and externally. Once temperature has stabilised, the pressure test commences using pure Helium (for low temperature testing: Nitrogen or 99% Nitrogen / 1% Helium) as the test medium. Pressure can be increased in increments and seat leakage measured at each increment. Test pressure depends on the rating of the valve and the maximum is limited by the working pressure as designated by ASME B16.34.

Seat leakage is measured with calibrated flow meters. Valve Inspection and Test Standard API 598 defines the maximum permissible leakrate with air or inert gas at ambient temperature conditions as 700cc/minute/inch bore diameter. However, for cryogenic service Goodwin manufactures, as standard, both its valves* with a maximum leakrate of 450cc/minute/NPS (ISO5208 Rate E) with Helium at -196° C. Goodwin has selected this maximum leakrate in response to the requirements of today's LNG plant designers.

Following the seat leak test, valve body integrity is tested whereby the entire body cavity is pressurised and a shell leak detection test carried out using a Mass Spectrometer.

Goodwin has supplied to the majority of the world's most prestigious LNG (Liquefied Natural Gas) projects, particulary to the export liquefaction plants but also to the LNG tanker carriers and the reception/regasification terminals. The vast majority of valves are of 316 Stainless Steel construction for use in Liquefied Natural Gas service at a temperature of -161°C. Additionally, a large number of valves are of LTCS body construction for low temperature service applications.

*On a number of LNG projects, in response to customers' design requirements, Goodwin has supplied its valves to far lower permissible leakrates than the 450 cc/minute/NPS. With the Goodwin Dual Plate Check Valve, Goodwin's ability to meet these more stringent customer shut-off requirements is achievable due to its unique and patented pressure sensitive plate design.

Cryogenic & High Pressure Gas Testing Facility

Goodwin has over 25 years of in-house cryogenic testing experience. Having its own cryogenic and high pressure gas test facility enables Goodwin to test valves in-house as large as 72" at temperatures down to -196°C and pressures to 15000psig/1035barg.

Typical Test Procedures

BS 6364
Shell SPE 77/200

Acceptance Standards

Seat Leakage: ISO 5208 Rate E - 450 cc/min/NPS
[Note: API598 - 700 cc/min/NPS]

Outside Leakage (body): Zero

18" 300# Axial Check Valve Type NKF on Cryogenic Test

70" 150# Dual Plate Check Valve on Cryogenic Test

Certification & Approvals


bsi.

Certificate of Registration

QUALITY MANAGEMENT SYSTEM - ISO 9001:2008

This is to certify that: Goodwin International Limited, Newstead Industrial Trading Estate, Trentham, Stoke-on-Trent, ST4 8HU, United Kingdom

Holds Certificate Number: FM 00343

and operates a Quality Management System which complies with the requirements of ISO 9001:2008 for the following scope:

Project and sub tier management including design, purchasing, manufacture (machining, fabricating, welding, finishing, painting, measurement), assembly and testing of precision engineered components and electromechanical systems for critical applications. Industries supplied include Civil / Military, Oil, Gas, Petrochemical, Nuclear, Aerospace and other allied industries. Design and manufacture of valves and submersible slurry pumps to the petrochemical and mining industries.

For and on behalf of BSI: Frank Lee, EMEA Compliance & Risk Director

Original Registration Date: 17/08/1994 — Effective Date: 27/05/2015
Latest Revision Date: 31/03/2016 — Expiry Date: 26/05/2018

Page: 1 of 1

...making excellence a habit.™


bsi.

Certificate of Registration

OCCUPATIONAL HEALTH & SAFETY MANAGEMENT SYSTEM

This is to certify that: Goodwin International Limited, Newstead Industrial Trading Estate, Trentham, Stoke-on-Trent, ST4 8HU, United Kingdom

Holds Certificate Number: OHS 600980

and operates an Occupational Health and Safety Management System which complies with the requirements of BS OHSAS 18001:2007 for the following scope:

Please see scope page.

For and on behalf of BSI: Frank Lee, EMEA Compliance & Risk Director

Original Registration Date: 17/06/2014 — Effective Date: 17/06/2014
Latest Revision Date: 29/04/2016 — Expiry Date: 16/06/2017

Page: 1 of 2

...making excellence a habit.™


bsi.

Certificate of Registration

ENVIRONMENTAL MANAGEMENT SYSTEM - ISO 14001:2004

This is to certify that: Goodwin International Limited, Newstead Industrial Trading Estate, Trentham, Stoke-on-Trent, ST4 8HU, United Kingdom

Holds Certificate Number: EMS 600979

and operates an Environmental Management System which complies with the requirements of ISO 14001:2004 for the following scope:

Project and sub tier management including design, purchasing, manufacture (machining, fabricating, welding, finishing, painting, measurement), assembly and testing of precision engineered components and electromechanical systems for critical applications. Industries supplied include; Civil / Military, Oil, Gas, Petrochemical, Nuclear, Aerospace and other allied industries. Design and manufacture of valves and submersible slurry pumps to the petrochemical and mining industries.

For and on behalf of BSI: Frank Lee, EMEA Compliance & Risk Director

Original Registration Date: 18/06/2014 — Effective Date: 18/06/2014
Latest Revision Date: 29/04/2016 — Expiry Date: 16/06/2017

Page: 1 of 1

...making excellence a habit.™


bsi.

Certificate of Registration

INTEGRATED MANAGEMENT REGISTRATION - PAS 99:2012

This is to certify that: Goodwin International Limited, Newstead Industrial Trading Estate, Trentham, Stoke-on-Trent, ST4 8HU, United Kingdom

Holds Certificate Number: IMR 613512

and operates an Integrated Management System which complies with the requirements of PAS 99:2012 for the following scope:

Project and sub tier management including design, purchasing, manufacture (machining, fabricating, welding, finishing, painting, measurement), assembly and testing of precision engineered components and electromechanical systems for critical applications. Industries supplied include Civil/Military, Oil, Gas, Petrochemical, Nuclear, Aerospace and other allied industries. Design and manufacture of valves and submersible slurry pumps to the petrochemical and mining industries.

This client is compliant with ISO 14001:2004 and BS OHSAS 18001:2007.

For and on behalf of BSI: Frank Lee, EMEA Compliance & Risk Director

Original Registration Date: 19/09/2014 — Effective Date: 19/09/2014
Latest Revision Date: 03/05/2016 — Expiry Date: 16/06/2017

Page: 1 of 1

...making excellence a habit.™


bsi.

Conformity based on Full Quality Assurance

This is to certify that: Goodwin International Ltd, Newstead Industrial Trading Estate, Trentham, Stoke-on-Trent, ST4 8HU, United Kingdom

Holds Certificate Number: CE 55079

In respect of:

Pressure Accessories

On the basis of our examination under the requirements of Council Directive 2014/68/EU Module H of the Pressure Equipment Directive.

For and on behalf of BSI, a Notified Body for the above Directive (Notified Body Number 0086): Gary Fenton, Global Product Certification Director

First Issued: 01/03/2002 — Latest Issue: 20/02/2017

Page: 1 of 2

...making excellence a habit.™


JQS

Joint Qualification System for suppliers to the Oil Industry in Norway and Denmark

Certificate of Qualification

Awarded to

GOODWIN INTERNATIONAL LIMITED

Company Registration number: 468115
Achilles Id: 12283

Achilles Information Centre hereby confirms that GOODWIN INTERNATIONAL LIMITED is Qualified in the Achilles Joint Qualification System for suppliers to the Oil Industry in Norway and Denmark. The Qualification concerns the product and service codes listed in the appendix.

Alle Gjerkes, Achilles Information Centre, Senior Manager, Oil & Gas

Anja Thorsdalen, Achilles Information Centre, Operations Manager

The participating Oil Companies and Main Contractors may use Achilles JQS as the basis for preparation of tender lists directly or together with additional qualification requirements of individual Company. Other qualification stages may be added by the individual Company. More information is available from the company responsible of Achilles Jas.

16.12.2016 — Issued date
01.01.2018 — Expiry date

Supplier No. 42851

Supplier No. 206106


Achilles

UVDB

Certificate of Registration

This is to certify that

GOODWIN INTERNATIONAL LIMITED

Supplier Number: 206106

are now fully registered as a supplier on UVDB for the following products/services

3.16.4 Non-Return/Reflux/Check Valves — 3.16.20 Control Valves
3.16.12 Pressure Control Valves

Melanie Cox, Procurement Manager, Bournemouth Water

Registration Expiry Date: 23 May 2017

This is not a legal document and cannot be used as such

Achilles Information Limited, Building 1000, Lakeside Park, Abingdon, OX14 4SH, United Kingdom
T: +44 (0)1235 697110 E: UVDB@achilles.com www.achilles.com

1

Version no. 002-090312


ТАМОЖЕННЫЙ СОЮЗ

ЕАС

СЕРТИФИКАТ СООТВЕТСТВИЯ


ЕАС

ТАМОЖЕННЫЙ СОЮЗ
ДЕКЛАРАЦИЯ О СООТВЕТСТВИИ

INNOVATION

INDUS
SERV

GOO
INTERNAT

Goodwin International Limited
design and production of chec
applications across a wid

A globally recognised and highly ap
national end-user companies and
specified and used in Upstrean
new build hydro

Goodwin valves are also exte
other energy related a

www.checkv

IN THE PIPELINE

STRIES
VED

DWIN
IONAL LTD

has been at the forefront of the
k valves for over 35 years with
de spectrum of industries.

proved brand with international and
EPCs, Goodwin Check Valves are
n, Midstream and Downstream
carbons projects.

ensively used in a diversity of
and process industries.

valves.co.uk

Goodwin International
Global Offices & Agents

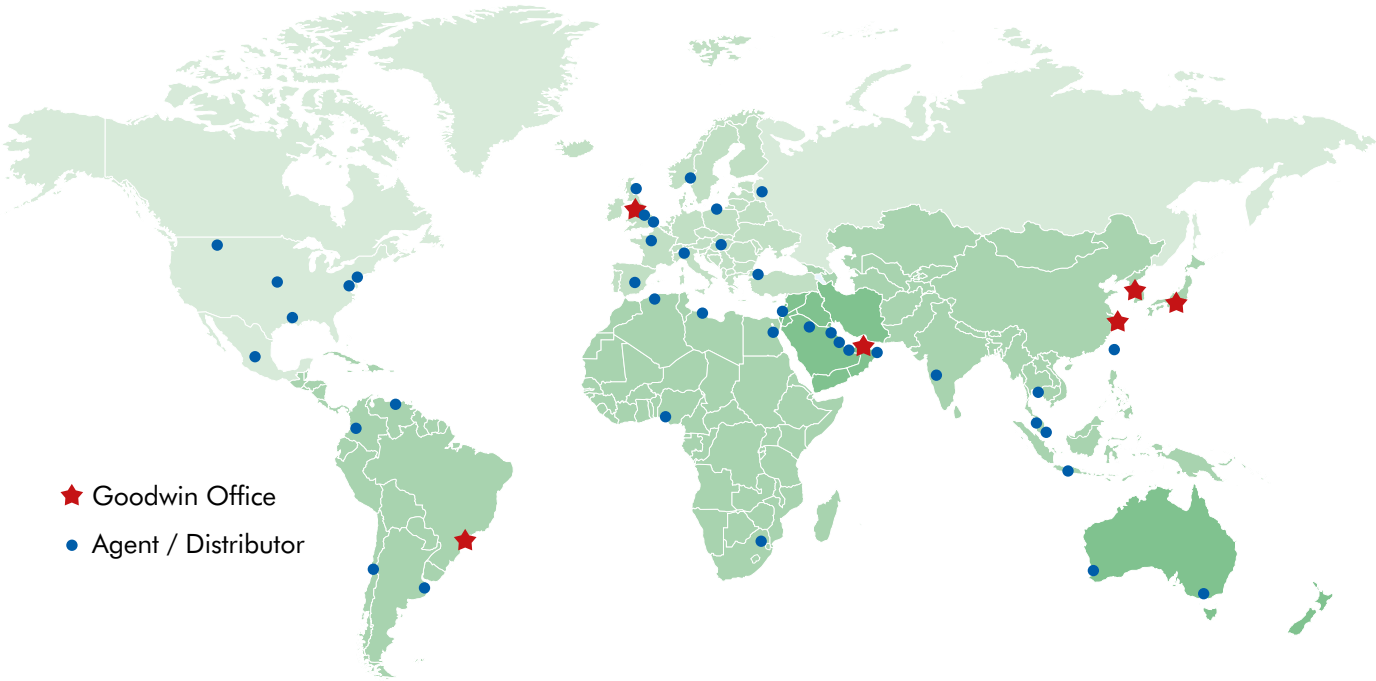

Goodwin International Ltd - UK Office & Manufacturing Facility

Plantation Road
Trentham, Stoke-on-Trent
ST4 8HU England
www.checkvalves.co.uk

Tel +44 (0)1782 220000
Fax +44 (0)1782 208060
Email checkvalves@goodwingroup.com

Goodwin Korea Co., Ltd

382-45 Wonchang-Dong
Sue-Gu
Incheon 404-210
Korea
www.goodwin.co.kr

Tel +82 32 579 6313
Fax +82 32 579 6314
Email goodwinkorea@goodwin.co.kr

Goodwin (Shanghai) Valve Company Ltd

1/F suite C, No.14 Building, Xi Ya Road 11#,
Waigaoqiao Free Trade Zone, Shanghai,
China, 200131
www.checkvalve.com.cn

Tel +86 21 50460658
Fax +86 21 50460355
Email lliu@checkvalve.com.cn

Goodwin Latina

Rua das Margaridas, 70
Terra Preta - Mairiporã - SP
CEP 07600-000
Brazil
www.goodwinlatina.com

Tel +55 11 4486 1429
Fax +55 11 4486 3427
Email rarmengou@goodwinlatina.com

Goodwin International Ltd Japan Liaison Office

Tel +81 904177391
Email kfuruzono@goodwingroup.com

Goodwin International Ltd Middle East Liaison Office

Tel +971 552559724
Email akamesh@goodwingroup.com

GOODWIN
INTERNATIONAL LTD

GOODWIN
INTERNATIONAL LTD

Plantation Road, Trentham, Stoke-on-Trent, ST4 8HU, England
Tel +44 (0)1782 654000 Fax +44 (0)1782 208060 Email checkvalves@goodwingroup.com

www.checkvalves.co.uk

GIV-003 - 1000 1v7