Double-eccentric kinematics, and all stainless steel bodies and trims guarantee high performance corrosion resistant service for application of KITZ Type UB butterfly valves to chemical industries.

Specification

Maximum service pressure			
10UB 16UB (size 1½" to 12")	1.4 MPa 2.0 MPa	16UB (size 14" to 24") 150UB	1.4 MPa 1.9 MPa
Service temperature range			
PTFE seat Carbon filled PTFE seat	−29℃ to +160℃ −29℃ to +200℃		
Wall thickness			
	ASME B 16.34 Class 150		
Face to face dimensions			
6" and smaller 8" and larger	ISO 5752 Short ISO 5752 Medium		
Coupling flanges			
10UB 16UB 150UB	JIS 10K JIS 16K ASME Class 150		

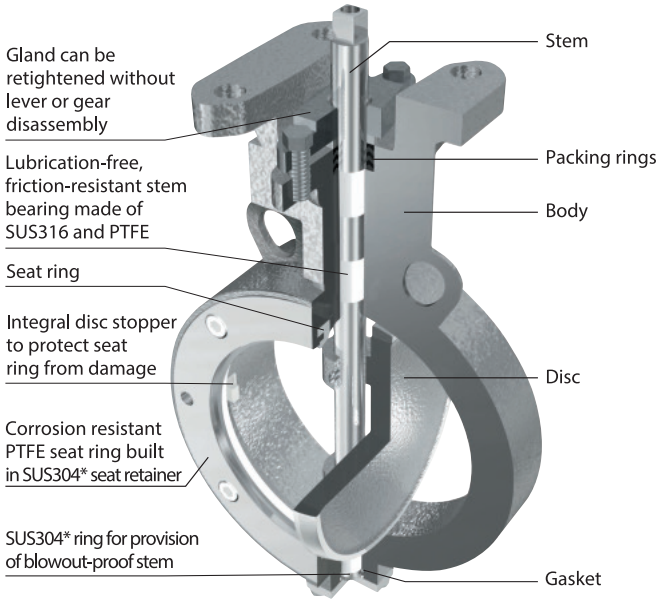

*SCS14A or SUS316 is available as an option

Standard Materials

Parts	ASTM Materials	JIS Materials
Body	A351 Gr.CF8*1	SCS13A*1
Stem	304SS	
Disc	A351 Gr.CF8*1	SCS13A*1
Gland	A351 Gr.CF8*1	SCS13A*1
Seat ring	PTFE*2	
Seat retainer	304SS	
Gland packing	PTFE	
Gasket	PTFE	

Parts	ASTM Materials	JIS Materials
Set bolt	Stainless Steel	
Taper pin	316SS	
Stem bearing	METAL BACKED PTFE	
Gland bolts	Stainless Steel	
Thrust washer	PTFE	
End plate	A351Gr.CF8	SCS13A
End plate bolts	304SS	

*1. CF8M(316)/SCS14A(SUS316) is available as an option.
*2. Carbon filled PTFE seat rings are optionally available.

Feature

Double-eccentric Kinematics

The valve's stem is designed eccentric to both the center of the seat ring (by X) and the center of the valve body (by Y), which makes the clearance C between the seat ring and the disc seat surface on its fully open position (Fig. 1). Disc seating surface is spherically machined and contacts PTFE seat tightly thorough 360℃ for leak-free service. All these help minimize frictional wear of seat rings and reduce the valve operating torque considerably.

Fig. 1

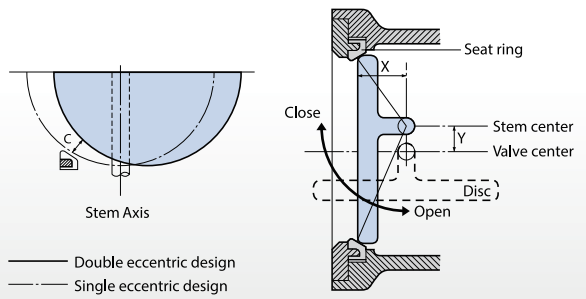

Durable Seat Rings

Seat rings are made of PTFE with stainless steel supporter. Furthermore, double-eccentric kinematics relieve seat ring from damage or wear which is a rather usual problem of conventional butterfly valves. This makes the service life twice as long as rubber seated butterfly valves.

Retightening of Gland Packing

There is a room between the gland and the lever or gear to allow retightening of gland boltings without trouble of disassembly of the lever or gear during plant operation (Fig. 2).

Fig. 2

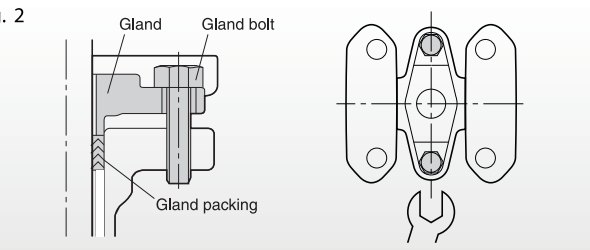

Stainless Steel Butterfly Valves

Flow Coefficient (Cv)

Size DN	Size NPS	Cv value	Size DN	Size NPS	Cv value
40	1 1/2	30	250	10	3660
50	2	83	300	12	5640
65	2 1/2	175	350	14	7060
80	3	255	400	16	9390
100	4	460	450	18	12300
125	5	722	500	20	15300
150	6	1180	600	24	22900
200	8	2240			—

P-T Rating

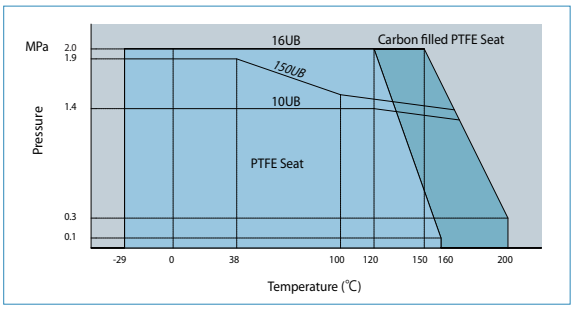

Contact KITZ for technical advice when service conditions may exceed the P-T rating range limited here.

Pressure Loss (for handling static clean water)

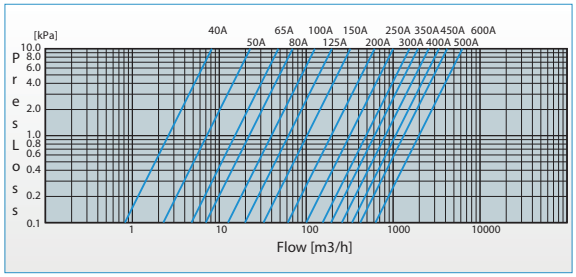

Flow Characteristics

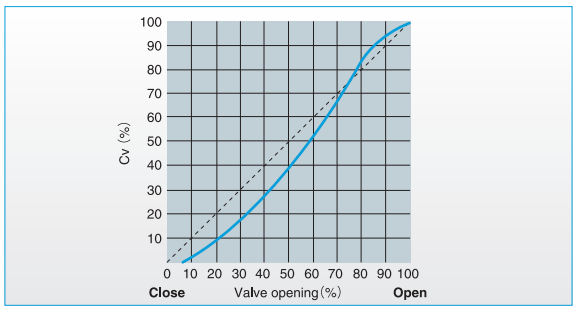

⚠ CAUTION

For mounting valves onto pipes, be sure to use gaskets* specified below:

*Non-asbestos joint sheet or PTFE sheet

unit: mm

Size DN	Size NPS	I/D Min.	I/D Max.	O/D Min.	Thickness Min.
40	1 1/2	48	57	73	3
50	2	60	61	90	3
65	2 1/2	73	77	115	3
80	3	88	90	126	3
100	4	108	116	146	3
125	5	136	143	181	3
150	6	162	170	211	3
200	8	213	220	257	3
250	10	266	275	322	3
300	12	312	326	367	3
350	14	342	359	410	3
400	16	389	410	470	3
450	18	444	460	530	3
500	20	493	513	580	3
600	24	594	615	688	3

⚠ CAUTION

- The following gaskets should be used for installation of the UB series butterfly valves to pipelines.
  [Type of Gasket]
  · Non-asbestos joint sheet gasket
  · Reinforced PTFE gasket (Jacketed gasket, Spiral Wound gasket, or Metal gasket cannot be installed.)
  [Shape of Gasket]
  · Full-face gasket
  · Ring gasket (for full-face flanges and flat-face flanges)
  [Dimension of Gasket]
  The dimension of the gasket should comply with JIS B 2404 and ASME B 16.21 (minimum gasket thickness is 3 mm).
- UB series butterfly valves cannot be used with lapped loose flanges (lap joints + stub ends, stainless steel pipe joints with flanged pipe end).
- UB series butterfly valves may not be used with some large flat face flanges.
  JIS 5K RF Flange: Not applicable
  JIS 10K RF Flange: Applicable, but be sure to align the centers of the flange and the valve.
  JIS 16K RF Flange: Applicable
  Class 150 RF Flange: Applicable, but be sure to align the centers of the flange and the valve.
- UB series butterfly valves cannot be used with rubber lining pipes
- UB is a unidirectional valve. The valve must be installed according to an arrow, provided on the side of the operator mounting flange. The arrow must point from the higher pressure side to the lower pressure side in the valve closed position.
- To retighten the packing, do not cover the gland with insulation material.
- Retighten the gland bolts before operation of the valve. Check a handle torque while retightening the bolts so that the operation won't became too difficult due to over-tightening. The gland bolts should be alternately tightened with an even force. Even if leakage is observed from the gland section due to stress relaxation, make sure to retighten the gland bolts.

Lever Operated

10UB
150UB

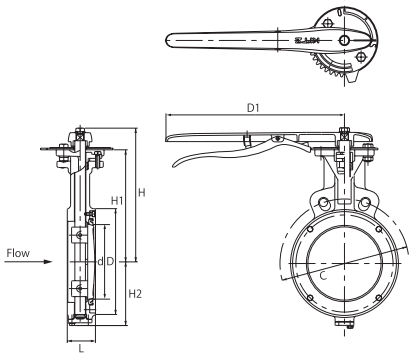

■Dimensions unit：mm

Size A	Size B	d	H	H1	H2	L	D	C 10UB	C 150UB	D1
40*	**1½***	**36**	**183**	**149**	**58**	**33**	**81**	**105**	**—**	**230**
50	2	50	176	138	64	43	92	120	120.5	230
65	2½	65	186	148	74	46	117	140	139.5	230
80	3	78	207	167	82	46	128	150	152.5	280
100	4	98	221	181	92	52	148	175	190.5	280
125	5	123	241	202	115	56	183	210	216	350
150	6	148	263	225	126	56	213	240	241.5	350

＊10UB only.

Gear Operated

GL-10UB
GL-16UB
GL-150UB

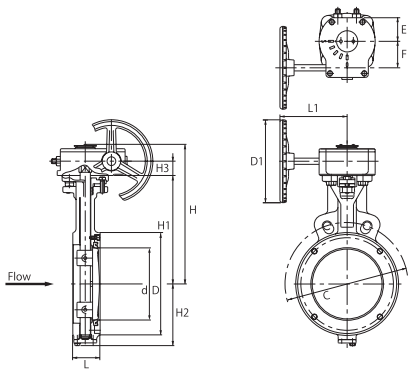

■Dimensions unit：mm

Size A	Size B	d	H	H1	H2	H3	L	D	C 10UB	C 16UB	C 150UB	D1	L1	E	F	Gear type
40*1	**1½*1**	**36**	**202**	**149**	**58**	**25**	**33**	**81**	**105**	**—**	**—**	**110**	**150**	**35**	**42**	No. FC-1
50	2	50	192	138	64	25	43	92	120	120	120.5	140	150	35	42	
65	2½	65	202	148*2	74	25	46	117	140	140	139.5	140	150	35	42	
80	3	78	226	167	82	28	46	128	150	160	152.5	170	195	42	60	No. FC-2
100	4	98	240	181	92	28	52	148	175	185	190.5	170	195	42	60	
125	5	123	261	202	115	28	56	183	210	225	216	200	204	42	60	
150	6	148	283	225	126	28	56	213	240	260	241.5	200	204	42	60	
200	8	197	348	263	163	47	71	259	290	305	298.5	310	280	54	66	No. FC-3
250	10	243	416	315	234	60	76	322	355	380	**362**	360	310	68	89	No. FC-4
300	12	295	443	342	257	60	83	367	400	430	**432**	360	310	68	89	
350	14	325	**475**	375	293	57	92	410	445	480	—	500	358	70	94	No. FC-5
400	16	371	572	409	314	94	102	470	510	540	—	500	360	90	134	No. FC-6
450	18	421	607	443	369	94	114	530	565	605	—	500	360	90	134	
500	20	470	623	459	394	94	127	580	620	660	—	500	360	90	134	
600	24	569	757	558	475	117	154	688	730	770	—	500	371	105	213	No. FC-7

＊1 GL-10UB only.
＊2 GL-10UB：149