Catalog No. BE302-04

NDV BALL VALVES

NIPPON DAIYA VALVE Co., Ltd.

1. 2-Way Ball Valve

Fire Safe Type Ball Valve: F100NB
High Pressure / Large Bore Ball Valve: E(K)100S
Jacketed Ball Valve: E100JNC
Extension Stem Ball Valve: FEX100NB

2-Way Ball Valve

2. 3-Way Ball Valve

2 Seats 3-Way Ball Valve: E300NB-L2
4 Seats 3-Way Ball Valve: E300NB-T4/L4
3 Seats 3-Way Ball Valve: E300N-T3/L3

3-Way Ball Valve

3. V-Port Valve

V100ND(NC)

V-Port Valve

4. Pneumatically Operated Valve

Pneumatically Operated 2-Way Ball Valve
Pneumatically Operated 3-Way Ball Valve
Pneumatically Operated V-Port Valve

Pneumatically Operated Valve

5. Electrically Operated Valve

Electrically Operated 2-Way Ball Valve
Electrically Operated 3-Way Ball Valve
Electrically Operated V-Port Valve

Electrically Operated Valve

6. Special Purpose Ball Valve

High Temperature Ball Valve
Y-Shaped 3-Way Ball Valve
Ball Valve for Shield Tunneling Method
Top Entry Ball Valve

Special Purpose Ball Valve

7. Safety Instructions

Safety Instructions

Introduction

2-Way Ball Valve

Fire Safe Ball Valve

Lever Operated
Ball Valve
F100NB

Gear Operated
Ball Valve
FG100NB

Pneumatically Operated
ON-OFF Ball Valve
FPN1100NB

Electrically Operated
Ball Valve
FMS4100NB

High Pressure / Large Bore Valve

Gear Operated Ball Valve
EKG100S

Jacketed Ball Valve

Lever Operated Ball Valve
E100JNC

Extended Gland Ball Valve

Lever Operated Ball Valve
FEX100NB

3-Way Ball Valve

Lever Operated
Ball Valve
E300NB-L2

Pneumatically Operated
ON-OFF Ball Valve
EPN1300NB-L2

Pneumatically Operated
ON-OFF Ball Valve
EPN1300N-T3

Electrically Operated
Ball Valve
EMS4300NB-T4

For further technical details and specifications, Please contact NDV or local representative.

V-Port Valve

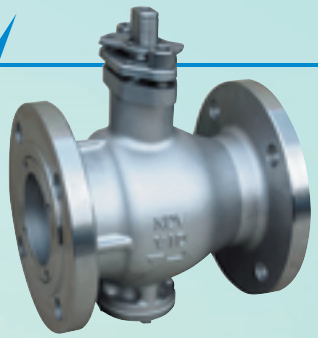

Lever Operated Valve
V100ND (NC)

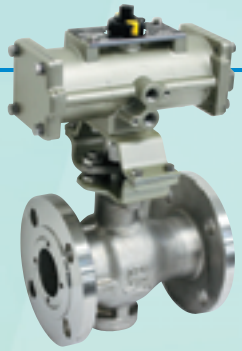

Pneumatically Operated ON-OFF Valve
VPN1100ND (NC)

Pneumatically Operated ON-OFF Valve
VPN3100ND (NC)

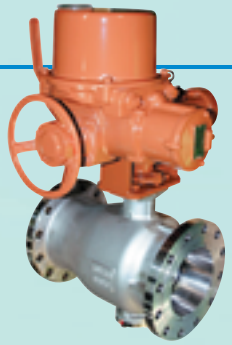

Electrically Operated Valve
VMS4100ND (NC)

Special Purpose Ball Valve

High Temperature Ball Valve

Metal Seat Ball Valve
F(H)100NB-ST

Y-Shaped 3 Way Ball Valve

Pneumatically Operated ON-OFF Ball Valve
YWN1300

Ball Valve for Shield Tunneling Method

Hydraulically Operated Ball Valve
EKTON1100N

Top Entry Ball Valve

Lever Operated Ball Valve
T100S

Contents

7 1. 2-Way Ball Valve

8 2-Way Ball Valve Structure and Features
9 Sealing Mechanism
10 Reference for Seat Selection
12 1-1. Fire Safe Ball Valve: F100NB
15 1-2. High Pressure / Large Bore Ball Valve: E(K)100S
16 1-3. Jacketed Ball Valve: E100JNC
18 1-4. Extended Gland Ball Valve: FEX100NB

21 2. 3-Way Ball Valve

22 Flow Pattern and Seats number
23 Changeover Form
23 Valve Code
24 2-1. 2 seats 3-Way Ball Valve: E300NB-L2
25 2-2. 4 seats 3-Way Ball Valve: E300NB-T4/L4
26 2-3. 3 seats 3-Way Ball Valve: E300N-T3/L3

27 3. V-Port Valve

28 Structure and Features
29 Reference for Seat Selection
31 3. V-Port Valve: V100ND(NC)

33 4. Pneumatically Operated Valve

34 Torque Actuator: 04DN to 12DN
36 Torque Actuator for Large Bore: 13D to 25D
37 Selection for Actuator
38 4-1. Pneumatically Operated 2 Way Ball Valve
39 Fire Safe Ball Valve:
FPN(PO,PC)1100NB
41 Jacketed Ball Valve:
EPN(PO,PC)1100JNC
42 Extended Gland Ball Valve:
FEXPN(PO,PC)1100NB
43 4-2. Pnuematically Operated 3-Way Ball Valve
44 2 seats 3-Way Ball Valve:
EPN(PO,PC)1300NB-L2
46 4 seats 3-Way Ball Valve:
EPN(PO,PC)1300NB-T4/L4
3 seats 3-Way Ball Valve:
EPN(PO,PC)1300N-T3/L3
48 4-3. Pneumatically Operated V Port Valve:
VPN(PO,PC)1100ND(NC)
51 4-4. Data for Pneumatically Operated Valve

55 5. Electrically Operated Valve

56 Models and Features
56 SRH Type
57 SRJ Type
58 SHA Type, SD# Type
59 PMK Type
60 5-1. Electrically Operated 2-Way Ball Valve
Fire Safe Type:
F□4100NB
65 5-2. Electrically Operated 3-Way Ball Valve
2 Seats 3-Way Ball Valve:
E□4300NBL2
4 Seats 3-Way Ball Valve:
E□4300NB-T4/L4
3 Seats 3-Way Ball Valve:
E□4300N-T3/L3
70 5-3. Electrically Operated V-Port Valve
V□4100ND(NC)

73 6. Special Purpose Ball Valve

74 6-1. High Temperature Valve
Metal Seat Ball Valve
76 6-2. Y-Shaped 3-Way Ball Valve
81 6-3. Ball Valve for Shield Tunneling Method
82 6-4. Top Entry Ball Valve

83 7. Safety Instructions

1

2-Way Ball Valve

2-Way Ball Valve Structure and Features

Sealing Mechanism

Reference for Seat Selection

1-1. Fire Safe Ball Valve: F100NB

1-2. High Pressure / Large Bore Ball Valve: E(K)100S

1-3. Jacketed Ball Valve: E100JNC

1-4. Extended Gland Ball Valve: FEX100NB

2-Way Ball Valve Structure and Features

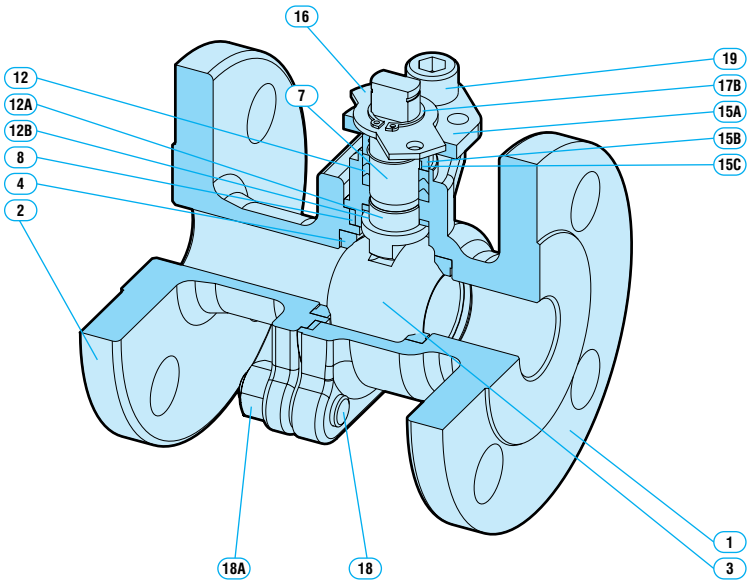

1	Body
2	Cap
3	Ball
4	Seat
7	Stem
8	Gasket
12	Packing
12A	Bearing
12B	Thrust Washer
15A	Gland Flange
15B	Gland
15C	Bearing
16	Travel Stop
17B	Retaining Ring
18	Stud Bolt
18A	Nut
19	Cap Screw

❶ Flow with Minimum Pressure Loss

Pressure loss at full open is very small because flow path of valve is the same as piping and accordingly the flow resistance is very low.

❷ Easy Operation

Quarter turn from full open/close to full close/open can be easily done. Lever position indicates open or close position clearly.

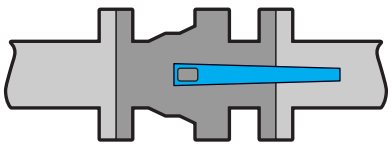

Full Open

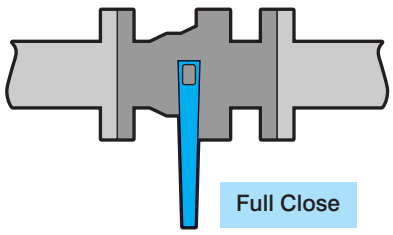

Full Close

❸ High Sealing Efficiency

Since resins such as PTFE are used for valve seat, sealing is superior and fluid can be stopped easily.

❹ Easy Attachment of Actuator

Various types of actuator can be mounted by Yoke and coupling.

Pneumatically Operated Valve

Electrically Operated Valve

Sealing Mechanism

Floating Ball Type

Stem is only linked with ball at trench shaped slot at top of the ball. In this mechanism, self-sealing is secured by pushing ball against the outlet side seat by fluid pressure.
Floating Ball types are applicable for low pressure use (up to JIS 20K, CL300) and Smaller boar valves (up to DN200).

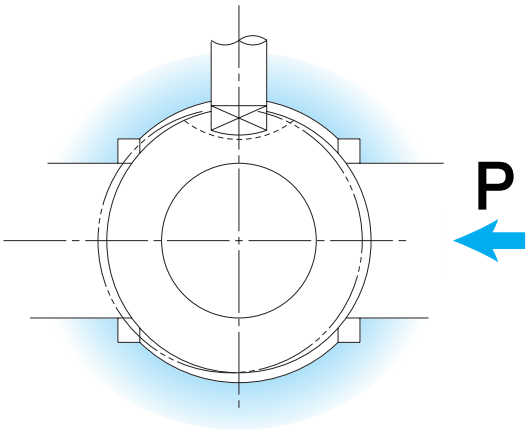

Trunnion Ball Type

Both top and bottom of ball are supported by stem with trunnion. In this mechanism, sealing is secured by seat spring pressure and fluid pressure to rear side of inlet side seat. Since sealing is secured at inlet side only, the change of operation torque is smaller even if the change of fluid pressure is large.
Trunnion types are applicable for high pressure use (JIS 30K, CL600 or more) or large bore valves (DN250 or more).

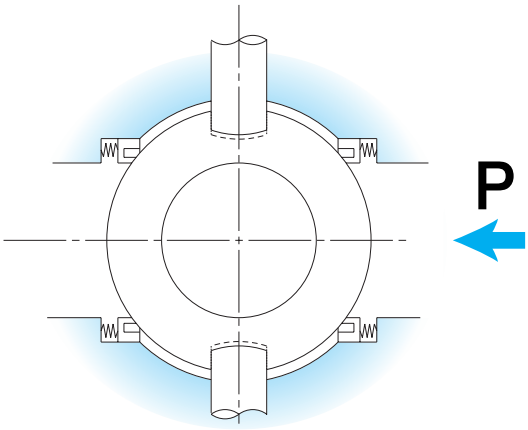

Reference for Seat Selection

Seat Specifications and Features

Main Products;

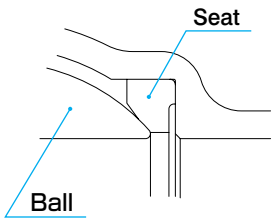

NTF

Material: New-PTFE (NDV Standard) **Features:** Heat resistance, Chemical resistance, Anti-viscosity, Less abrasion, High temperature creep resistance.
•Color: White •Max. Working Temperature: 240°C (may change by working condition) •Applications: Cleaning solutions, Solvent, Viscous fluid

NCF

Material: Reinforced PTFE with Carbon Fiber **Features:** Superior in Less abrasion to PTFE
•Color: Black •Max. Working Temperature: 240°C (may change by working condition) •Applications: Sludge, Slurry, Powders

NGR

Material: Reinforced PTFE with Glass Fiber **Features:** Similar abrasion resistance as NCF.
•Color: White •Max. Working Temperature: 240°C (may change by working condition) •Applications: Food processing with fibers, where black color should be avoided.

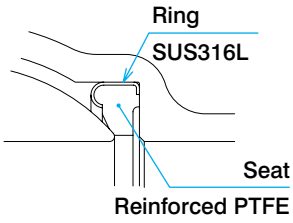

CFM (GRM)

Material: NCF (NGR) reinforced by outside metal ring (SUS316L Press molding)
Features:
Less seat damages at intermediate open position,
Less seat damages by jam or being pinched at high temperature,
Protection for seat damage or deformation by abnormal pressure rise
•Color: CFM Black (resin portion) / GRM White (resin portion)
•Max. Working Temperature: 240°C (may change by working condition) •Applications: Steam, Sludge, Slurry, Powders

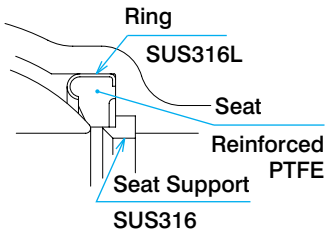

CFMR (GRMR)

Material: CFM (GRM) reinforced by inside metal ring
Features: Wider ranges of use than CFM (GRM)
Refer to page 11 for max working pressure and temperature range of use.
•Color: CFMR Black (resin portion) / GRMR White (resin portion) •Max. Working Temperature: 240°C (may change by working condition) •Applications: Steam, Sludge, Slurry, Powder

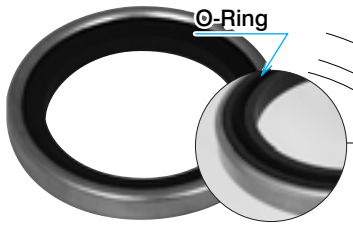

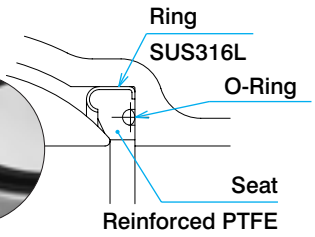

CFMO (GRMO)

Material: CFM (GRM) with O-ring in reverse.
Features: Inlet side sealing is expected for Floating Ball Valve.
•Color: CFMO Black (plastic portion) / GRMO White (plastic portion) •Size: DN40, 200 •Max. Working Temperature: 150°C (may change by working condition) •Applications: Sludge, Slurry

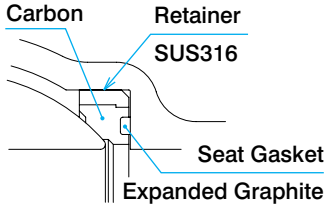

CB

Material: High temperature seat with thermal inserted Retainer (SUS316) outside impregnated Carbon graphite metal
Features: Rigidity is high and suitable for use of valve with intermediate open and flow control.
•Color: Black •Max. Working Temperature: 450°C (may change by working condition) •Applications: Steam, Heat transfer oil Tolerable seat leak volume; as per JIS B2003 rate B

Working Pressure and Temperature Range

Valve Code: F100NB, E100JNC, E300NB-L2, EK100N (Trunnion type)

No.	Code	Mechanism
①	**NTF**	Floating Ball Type
	NCF, NGR, CFM	
②	**CFMR**	
③	**CFRS** (O-Ring: NBR)	Trunnion Ball Type
④	**CFRS** (O-Ring: FKM)	

DN15 to 25

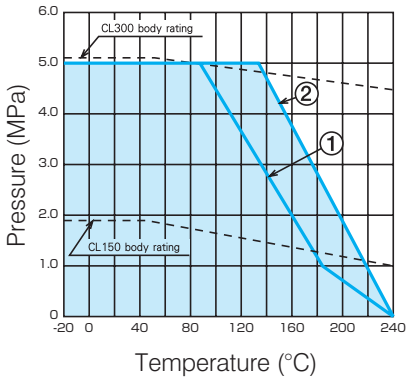

DN40 to 65

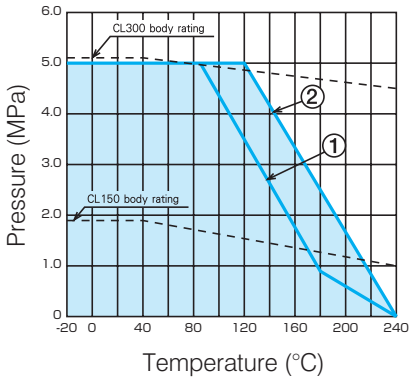

DN80 to 100

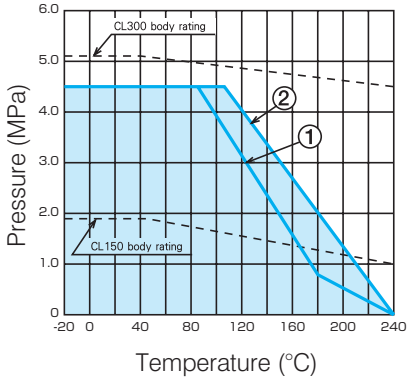

DN125 to 200

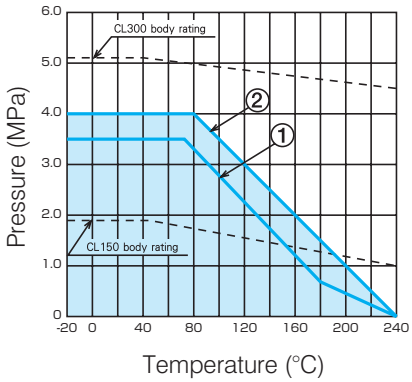

DN250 to 350 (Trunnion type)

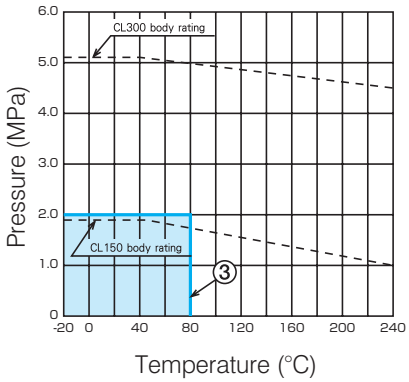

DN250 to 350 (Trunnion type)

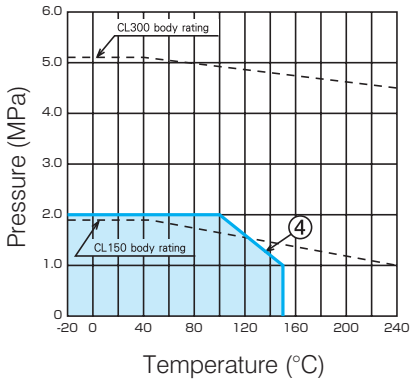

Cv Value: F100NB

Size (DN)	15	20	25	40	50	65	80	100	125	150	200
Cv	22	44	85	240	430	740	1200	2100	3400	5000	9700

1-1 Fire Safe Ball Valve: F100NB

Structure and Features

Fire Safe type mechanism is to minimize fluid leakage by producing metal shut-off when seal parts such as seats and packings are burned out by fire.

Gland Packing

A collar provided on a stem prevents the stem from popping out due to fluid pressure. Also, in the event that the gland packing is burned out by fire, the stem flange adheres outside of the valve. (Stem Guard Mechanism)

Antistatic Mechanism

An Antistatic Mechanism is provided to prevent the accumulation of static electricity (produced by friction between the ball and seat) at Ball, Seat and Stem.

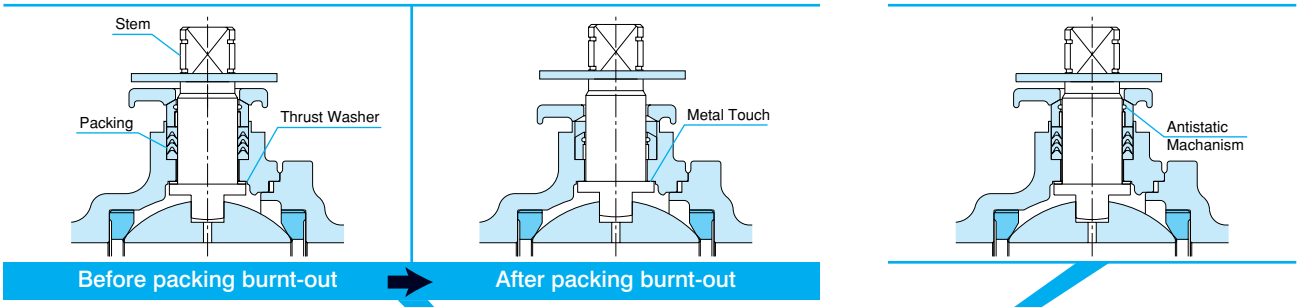

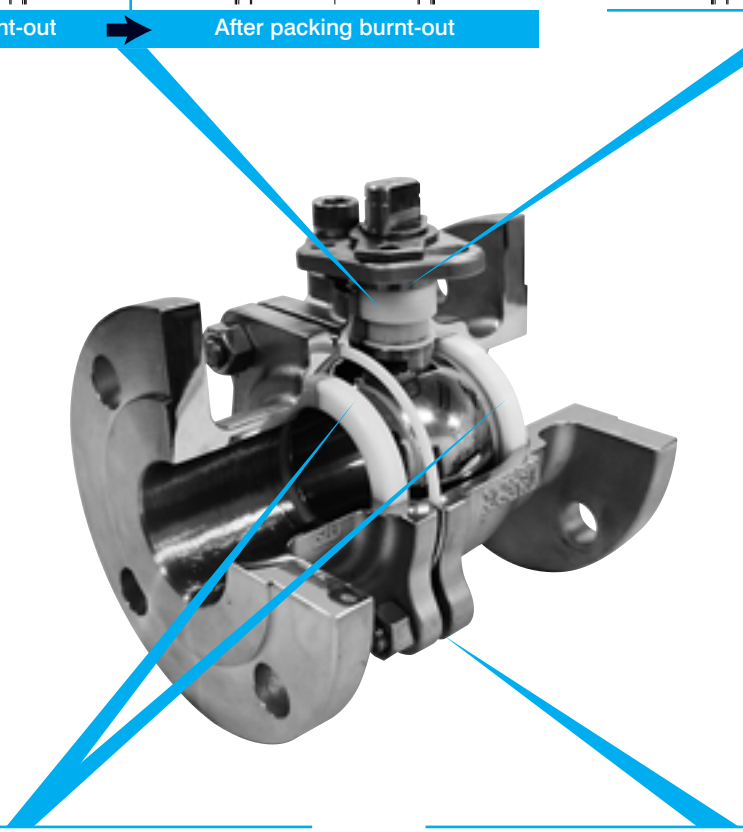

Seat

In the event that the seat is burned out by fire, the ball will come to rest firmly against metal seat, minimizing flud leakage.

Gasket

The seals for the body and flange joints have a double-layer sealing mechanism made up of gasket and a metal-to-metal contact, which prevents leakage at the body joint in the event that the gasket is burned out by fire.

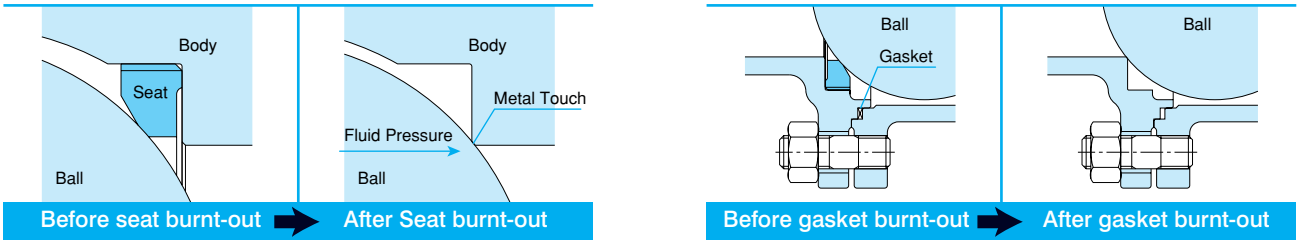

Specification

F100NB | Full Port | Floating Ball Valve

Nominal Size	DN15 to 200
Face to Face Dimension	Complied with ISO5752
Connection	Flanged type JIS10K, 20K (*1) Class (ASME, JPI) 150,300 (*2)
Body Material	FCD400, SCS13A (CF8), SCS14A (CF8M),SCS16A (CF3M)
Ball Material	SCS13A (SUS304), SCS14A (SUS316), SCS16A (SUS316L)
Seat Material	NTF, NCF, NGR, CFM, CFMR, CFMO (refer to page 10)
Operation Type	Lever, Gear, Pneumatical, Electrical
Paint (body)	Rust prevention paint (excluding stainless steel)

*1: JIS B2220 *2: ASME B16.5

Parts and Materials

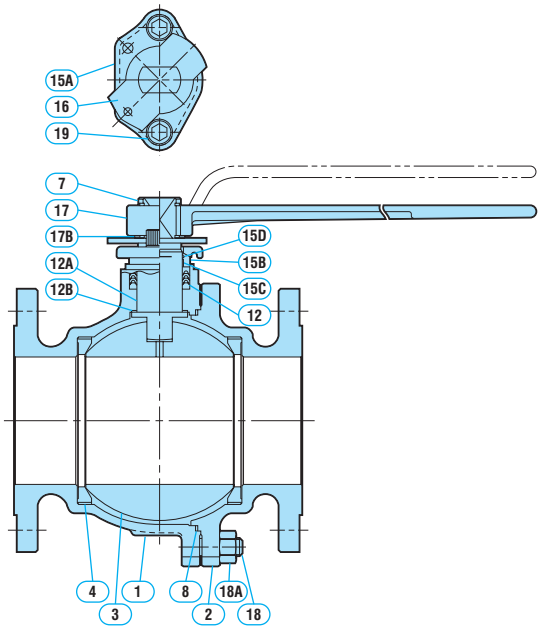

Parts		Material			
		F104NB	F107NB	F112NB	F113NB
1	Body	FCD400	SCS13A	SCS14A	SCS16A
2	Cap	FCD400	SCS13A	SCS14A	SCS16A
3	Ball	SCS13A or SUS304	SCS13A or SUS304	SCS14A or SUS316	SCS16A or SUS316L
4	Seat	NTF, NCF, etc.			
7	Stem	SUS304	SUS304	SUS316	SUS316L
8	Gasket	New-PTFE			
12	Packing	New-PTFE			
12A	Bearing	New-PTFE			
12B	Thrust Washer	New-PTFE			
15A	Gland Flange	SCS13A			
15B	Gland	SUS304			
15C	Stem Bearing	New-PTFE			
15D	Wire Spring	SUS304			
16	Travel Stop	SUS304			
17	Lever	SCPH2 (DN15/100), SCPH2 & STK490 (DN125/200)			
17B	Retaining Ring	SUS304			
18	Stud Bolt	SNB7	SUS304	SUS304	SUS304
18A	Nut	S45C	SUS303	SUS303	SUS303
19	Cap Screw	SUS304			
20	Set Screw	SUS304 (DN125 to 200 for lever)			

Applicable Class (DN15 to 200)

Body Material	Class			
	JIS10K	CL150	JIS20K	CL300
FCD400	○	○	—	—
SCS13A	○	○	○	○
SCS14A	○	—	—	—
SCS16A	○	○	○	○

Gear Operation

Gear operation types are available for DN100 or bigger one.

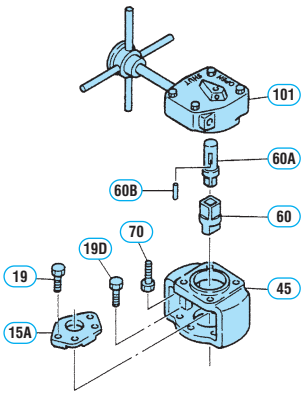

Parts for Gear

15A	Gland Flange	SCS13A
19	Cap Screw	SUS304
19D	Set Screw	SWCH
45	Yoke	FCD450
60	Joint	SCS13
60A	Joint	S25C
60B	Key	S45C
70	Cap Screw	SWCH
101	Gear Unit	—

Optional items

Lever Lock Mechanism, Square Shank, Open-Close indicator, Limit Switch, etc.

Valve Codes

Valve Code for F100NB

F 1 0 7 N B - N T F - 0 5 0 - J 1 0 K R F

❶ ✻ ❷ ❸ ❹

F100NB (Fire Safe Type Ball Valve)

❶ Body Material

04	FCD400
07	SCS13A
12	SCS14A
13	SCS16A

❷ Seat Material (Refer to Page 10)

NTF, NCF, NGR, CFM, CFMR

❸ Nominal Size (DN or A)

Conforming to ISO6708 and JIS B2001

❹ Connection

J10KRF	JIS 10KRF
J20KRF	JIS 20KRF
A150RF	ASME CL150
A300RF	ASME CL300

✻ Improvement Identification Code

None	Original Design
N	First Improvement
NB	Second Improvement
NC	Third Improvement
ND	Fourth Improvement

Dimension

F100NB (Full Port)

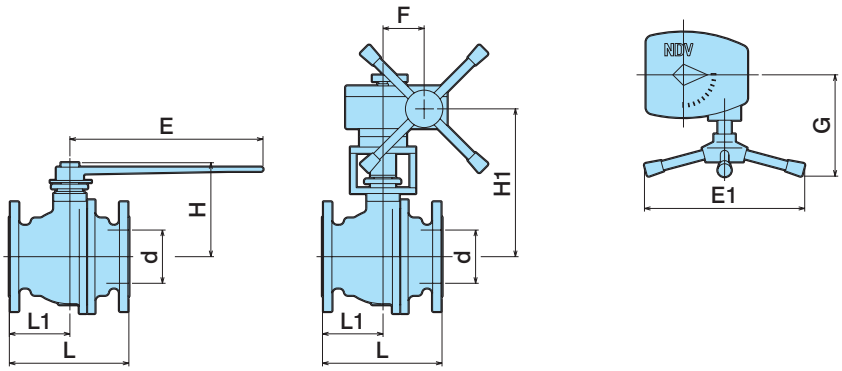

Unit: mm

Nominal size DN	d	L 10K CL150	L 20K CL300	L1 10K CL150	L1 20K CL300	H	E 10K CL150	E 20K CL300	H1 10K CL150	H1 20K CL300	G 10K CL150	G 20K CL300	F 10K CL150	F 20K CL300	E1 10K CL150	E1 20K CL300	Mass (Approx. kg) Lever Operated 10K CL150	Lever Operated 20K CL300	Gear Operated 10K CL150	Gear Operated 20K CL300
						Lever Operated Valve			Gear Operated Valve											
15	13	108	140	45	63	80	130	130	—	—	—	—	—	—	—	—	1.9	2.3	—	—
20	19	117	152	50	70	85			—	—	—	—	—	—	—	—	2.5	3.0	—	—
25	25	127	165	51	71	100	160	160	—	—	—	—	—	—	—	—	4.0	4.7	—	—
40	38	165	190	70.5	76.5	115	230	230	—	—	—	—	—	—	—	—	6.5	7.3	—	—
50	51	178	216	80.5	86	120			—	—	—	—	—	—	—	—	8.5	10.1	—	—
65	64	190	241	87	103	135	350	350	—	—	—	—	—	—	—	—	13.5	17.0	—	—
80	76	203	283	97	124	145			—	—	—	—	—	—	—	—	16.5	23.0	—	—
100	102	229	305	116	135	180	450	450	280	285	165	190	62.5	77	240	300	27.0	38.5	41.0	57.5
125	127	356	381	148	158	260	650	800	342	342	190	230	77	90.5	300	460	46.0	59.0	73.0	92.0
150	152	394	403	173	178	280			362	362							61.0	75.0	88.0	108.0
200	203	457	502	207	235	350	800	1100	425	446	230	260	90.5	121	460		98.0	123.0	135.0	174.0

1-2 High Pressure / Large Bore Valve: E(K)100S

Structure and Features

Trunnion Type Ball Valve is mainly used for high pressure fluid with sludge in addition to the other general use.
High pressure valve: JIS30K(CL600) or more.
Large Boar valve: DN250 or more.

Nominal Size	DN15 to 500, (DN15 to 50: Floating Ball Type)
Body Material	SCPH2 (WCB), SCS13A (CF8), SCS14A (CF8), SCS16A (CF3M)
Seat Material	PTFE, Reinforced PTFE
Connection	Flange JIS10K, 20K, 30K, 40K, 63K (*1) Class (ASME, JPI) 150, 300, 600, 900 (*2)
Operation Type	Gear (DN50 or more of JIS40K, CL600) Pneumatical, Electrical

*1: JIS B2220 *2: ASME B16.5

Parts and Materials (Reference)

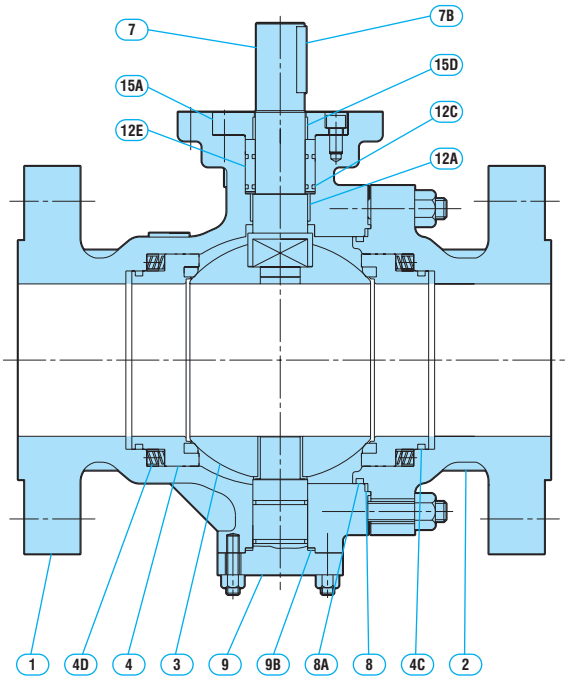

Parts		Material			
1	Body	SCPH2	SCS13A	SCS14A	SCS16A
2	Cap	SCPH2	SCS13A	SCS14A	SCS16A
3	Ball	SCS13A		SCS14A	SCS16A
4	Seat	Carbon Reinforced PTFE			
4C	O-Ring	NBR	FKM		
4D	Spring	SUS304WPB	Inconel X-750		
7	Stem	SUS304		SUS316	SUS316L
7B	Key	S45C-H			
8	Gasket	SUS304 & Expanded Graphite		SUS316 & Expanded Graphite	
8A	O-Ring	NBR	FKM		
9	Trunnion	SCS13A		SCS14A	SCS16A
9B	Gasket	SUS304 & Expanded Graphite		SUS316 & Expanded Graphite	
12A	Bearing	SPCC *	SUS316 & PTFE		
12C	O-Ring	NBR	FKM		
12E	Sleeve	SUS304		SUS316	SUS316L
15A	Gland	S20C	SUS304		
15D	Bearing	SPCC *			

* SPCC (Galvanized) & PTFE coating

For further technical details and specifications, Please contact NDV or local representative.

1-3 Jacketed Ball Valve: E100JNC

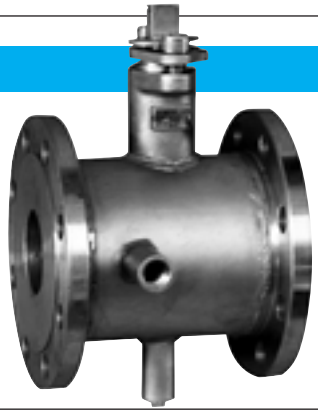

Structure and Features

Jacketed Ball Valve contains a jacket that covers the body. The valve has space for flow media such as hot water, steam or water for heating or cooling the fluid and is suitable for high viscous or easily frozen fluid.

Specification

E100JNC type | Full Port | Floating Ball Valve

Nominal Size	DN15 to 200	
Connection	Flange JIS10K, 20K (*1) Class (ASME,JPI) 150,300 (*2)	
Body Material	SCS14 (CF8M), SCS16A (CF3M) •Flange is oversized (refer to Dimension of E100JNC at page 17) •JIS20K, CL300 are available up to DN100.	
Ball Material	SCS14A (SUS316), SCS16A (SUS316L)	
Seat Material	NTF, NCF, NGR, CFM, CFMR, CFMO (refer to page 10)	
Operation Type	Lever, Gear, Pneumatical, Electrical	
Jacket	Max. Pressure	1.0MPa
	Max. Temperature	250°C
	Connection	2-Rp (Parallel pipe thread)
	Discharge (Lower Plug)	1-Rp (Parallel pipe thread)

The other special specifications are available upon request.
*1: JIS B2220 *2: ASME B16.5

Parts and Materials

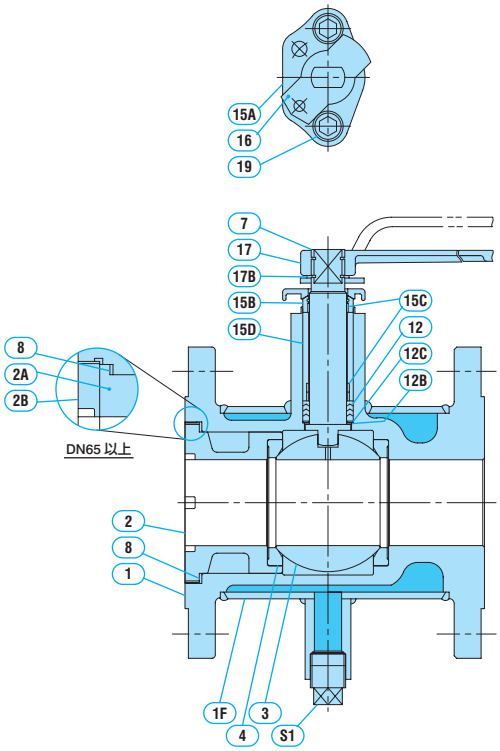

Parts		Material	
		E112JNC	E113JNC
1	Body	SCS14A	SCS16A
1F	Jacket	SUS304TP or SUS304	
2	Insert	SCS14A	SCS16A
2A	Insert	SCS14A	SCS16A
2B	Insert Ring (DN65–200)	SCS14A	SCS16A
3	Ball	SCS14A or SUS316	SCS16A or SUS316L
4	Seat	NTF, NCF, CFM, etc.	
7	Stem	SUS316	SUS316L
8	Gasket	PTFE	
12	Packing	Reinforced PTFE	
12B	Thrust Washer	New-PTFE	
12C	Washer	SUS316	SUS316L
15A	Gland Flange	SCS13A	
15B	Gland	SUS304	
15C	Bearing	New-PTFE	
15D	Spacer	SUS304	
16	Travel Stop	SUS304	
17	Lever	SCPH2 (DN15 to 100)	
		SCPH2 & STK490 (DN125 to 200)	
17B	Retaining Ring	SUS304	
19	Cap Screw	SUS304	
S1	Plug	SUS304	

Valve Codes

Valve Code for E100JNC

E 1 1 2 J N C - N T F - 0 5 0 - J 1 0 K R F

❶ ✻ ❷ ❸ ❹

E100JNC (Jacketed Ball Valve)

❶ Body Material

12	SCS14A
13	SCS16A

❷ Seat Material (Refer to Page 10)

NTF, NCF, NGR, CFM, CFMR

❸ Nominal Size (DN or A)

Conforming to ISO6708 and JIS B2001

❹ Connection

J10KRF	JIS 10KRF
J20KRF	JIS 20KRF
A150RF	ASME CL150
A300RF	ASME CL300

✻ Improvement Identification Code

None	Original Design
N	First Improvement
NB	Second Improvement
NC	Third Improvement
ND	Fourth Improvement

Dimension

E100JNC

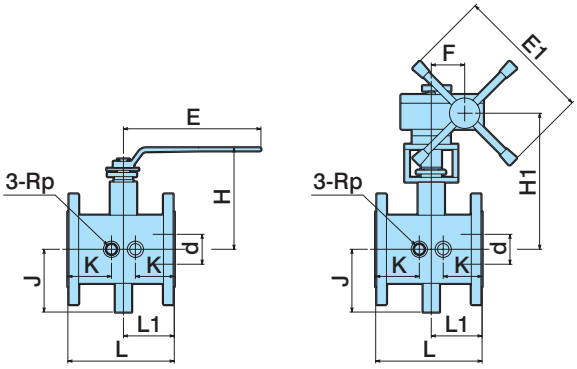

Unit: mm

Nominal size DN	d	L	L1	K	J	Rp	H	E	H1	E1	F	Connection Flange size DN	Mass (Approx. kg) Lever 10K CL150	Mass (Approx. kg) Gear 10K CL150
							Lever Operated Valve		Gear Operated Valve					
15	13	108	54	54	78	1/2	130	130	—	—	—	40	5.2	—
20	19	117	58.5	58.5			134		—	—	—		5.5	—
25	25	127	63.5	63.5	86		142	160	—	—	—	50	6.8	—
40	38	165	82.5	60	99		160	230	—	—	—	65	11.2	—
50	51	178	93	65	105		169		—	—	—	80	13.3	—
65	64	190	100		118		188	350	—	—	—	100	20.0	—
80	76	203	108	70	131		199		—	—	—	125	27.0	—
100	102	229	119	75	148		210	450	314	240	62.5	150	43.0	57.0
125	127	267	152	80	176	3/4	302	650	387	300	77	200	67.0	94.0
150	152	292		85	202		322		407			250	98.0	125.0
200	203	330	165	90	243		390	800	471	460	90.5	350	162.0	199.0

1-4 Extended Gland Ball Valve

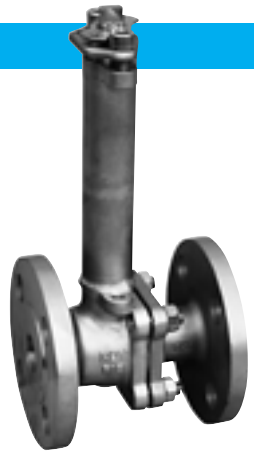

Structure and Features

Extended Gland is designed for valve with insulation material or valve used for high or low temperature fluid which causes valve deterioration.
Since the stem is extended, operation (open/close), as well as additional screw tightening for gland packing, is easy.

Specification

FEX100NB | Full Port | Floating Ball

Nominal Size	DN15 to 150
Face to Face dimension	Conforming to ISO 5752
Connection	Flange JIS10K, 20K (*1), Class (ASME,JPI) 150,300 (*2)
Body Material	SCS13A (CF8), SCS14A (CF8M), SCS16A (CF3M)
Ball Material	SCS13A (SUS304), SCS14 (SUS316), SCS16A (SUS316L)
Seat Material	NTF, NCF, CFM, CFMR, CFMO (refer to page 10)
Operation Type	Lever, Gear, Pneumatical, Electrical

Note: Above specification is for fire safe type ball valve F100NB
Extended Gland for other types are available upon request.
*1: JIS B2220 *2: ASME B16.5

Parts and Materials

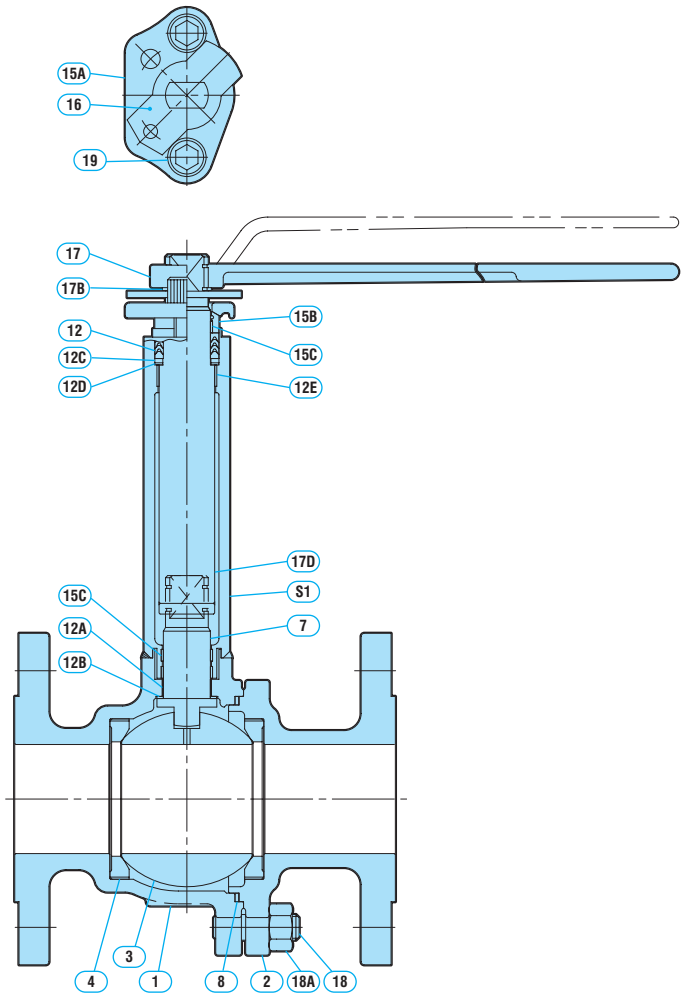

Parts		Material		
		FEX107NB	FEX112NB	FEX113NB
1	Body	SCS13A	SCS14A	SCS16A
2	Cap	SCS13A	SCS14A	SCS16A
3	Ball	SCS13A or SUS304	SCS14A or SUS316	SCS16A or SUS316L
4	Seat	NTF, NCF, etc.		
7	Stem	SUS304	SUS316	SUS316L
8	Gasket	New-PTFE		
12	Packing	New-PTFE		
12A	Bearing	New-PTFE		
12B	Thrust Washer	New-PTFE		
12C	Washer	SUS316		SUS316L
12D	Thrust Washer	New-PTFE		
12E	Bearing	New-PTFE		
15A	Gland Flange	SCS13A		
15B	Gland	SUS304		
16	Travel Stop	SUS304		
17	Lever	SCPH2		
17B	Retaining Ring	SUS304		
17D	Extended Rod	SUS304	SUS316	SUS316L
18	Stud Bolt	SUS304		
18A	Nut	SUS304		
19	Cap Screw	SUS304		
S1	Extended Gland	SCS13A or SUS304	SCS14A or SUS316	SCS16A or SUS316L

Valve Codes

Valve Code for FEX100NB

F E X 1 0 7 N B - N T F - 0 5 0 - J 1 0 K R F

❶ ✻ ❷ ❸ ❹

FEX100NB (Extended Gland Ball Valve)

❶ Body Material

07	SCS13A
12	SCS14A
13	SCS16A

❷ Seat Material (Refer to Page 10)

NTF, NCF, NGR, CFM, CFMR

❸ Nominal Size (DN or A)

Conforming to ISO6708 and JIS B2001

❹ Connection

J10KRF	JIS 10KRF
J20KRF	JIS 20KRF
A150RF	ASME CL150
A300RF	ASME CL300

✻ Improvement Identification Code

None	Original Design
N	First Improvement
NB	Second Improvement
NC	Third Improvement
ND	Fourth Improvement

Dimension

FEX100NB

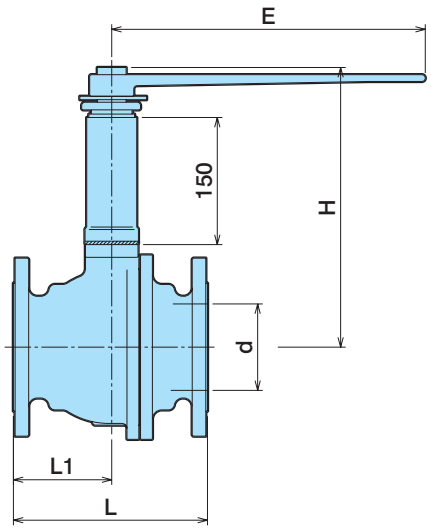

Unit: mm

Nominal size DN	d	L		L1		H	E		Mass (Approx. kg)	
		10K CL150	20K CL300	10K CL150	20K CL300		10K CL150	20K CL300	10K CL150	20K CL300
15	13	108	140	45	63	230	130	130	2.6	3.1
20	19	117	152	50	70	235			3.1	3.7
25	25	127	165	51	71	250	160	160	5.0	5.8
40	38	165	190	70.5	76.5	265	230	230	8.2	9.3
50	51	178	216	80.5	86	270			10.0	11.9
65	64	190	241	87	103	285	350	350	16.0	20.0
80	76	203	283	97	124	295			19.0	26.0
100	102	229	305	116	135	330	450	450	30.0	42.0
125	127	356	381	148	158	410	650	800	53.0	66.8
150	152	394	403	173	178	430			67.0	81.8

Memo

2

3-Way Ball Valve

Seat Mechanism (Port Shape and Seat Number)

Changeover Form

Valve Code for E300NB(N)

2-1. 2 seats 3-Way Ball Valve: E300NB-L2

2-2. 4 seats 3-Way Ball Valve: E300NB-T4/L4

2-3. 3 seats 3-Way Ball Valve: E300N-T3/L3

Seat Mechanism (Port Shape and Seat Number)

E300NB(N): L-Port/T-Port

L-Port (L2, L4, L3)	T-Port (T4, T3)
For flow path switching	For fluid diverting and mixing
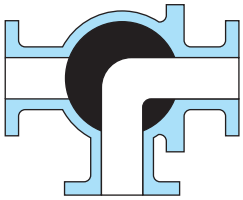	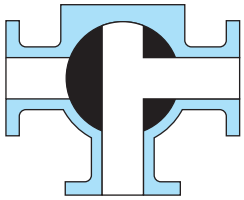

L-Port

Code	Flow Path and Seat Number	Nominal Size	Notes
L2	2 seats 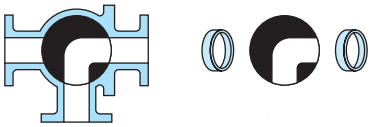	DN15 to 200	Seats are compatible with those of 2 way valve (F100NB). (*L2 type* has not a seat at the center. To prevent fluid deposit, *L4 type* will be applied.)
L4	4 seats 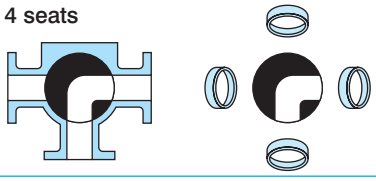	DN15 to 100	Seats are not compatible with those of 2 way valve (F100NB).
L3	3 seats 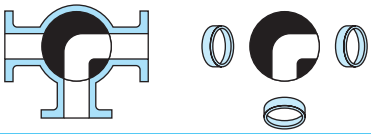	DN125 to 200	

T-Port

Code	Flow Path and Seat Number	Nominal Size	Notes
T4	4 seats 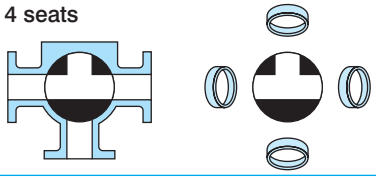	DN15 to 100	Seats are not compatible with those of 2 way valve (F100NB).
T3	3 seats 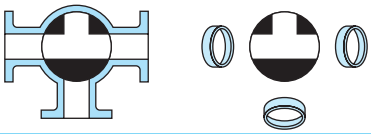	DN125 to 200	

Changeover Form

L-port

Right figure is the standard for L-Port type changeover form.
If automatic valve is applied, please specify form ① or ② as its shut-down form of the operation when the power (air or electricity) is lost.

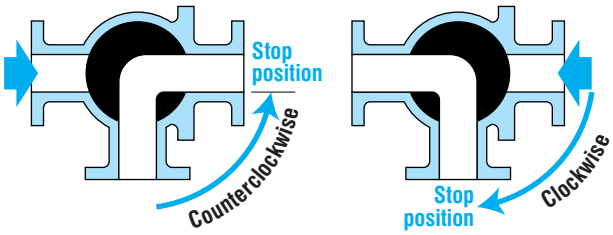

Form ① Form ②

T-Port

For T-port, such ① & ② or ① & ④ of below figure will be selected as changeover form of 90° rotation. If automatic valve is applied, select and specify either of form ①, ②, ③ or ④ as its shut-down form when the operation power (air or electricity) is lost.

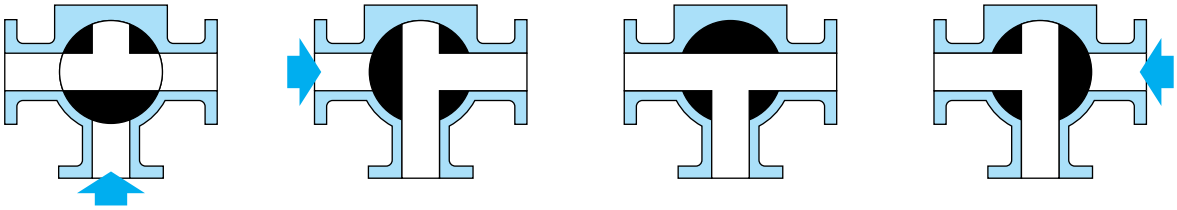

Form ① Form ② Form ③ Form ④

If a high pressure comes to a port as arrow mark in the above figure, a little leakage may occur to a low pressure side.

Valve Codes

Valve Code for E300NB(N)

E 3 0 7 N B - L 2 - N T F - 0 5 0 - J 1 0 K R F

❶ ✻ ❷ ❸ ❹ ❺

E300NB-L2/T4 (L4), E300N-T3(L3) (3-Way Ball Valve)

❶ Body Material

04	FCD400
07	SCS13A
12	SCS14A
13	SCS16A

❷ Seat Mechanism

	Port Shape	Seat Number
L2	L-Port	2
L3		3
L4		4
T3	T-Port	3
T4		4

❸ Seat Material (Refer to Page 10)

NTF, NCF, NGR, CFM, CFMR

✻ Improvement Identification Code

None	Original Design
N	First Improvement
NB	Second Improvement
NC	Third Improvement
ND	Fourth Improvement

❹ Nominal Size (DN or A)

Conforming to ISO6708 and JIS B2001

❺ Connection

J10KRF	JIS 10KRF
A150RF	ASME CL150

2-1 2 Seats 3-Way Ball Valve: E300NB-L2 Type

Structure and Features

The shape of the port is L Type. The valve is used for switching fluid.

Parts and Materials

The materials of the components are as below as far as there are no special requests.

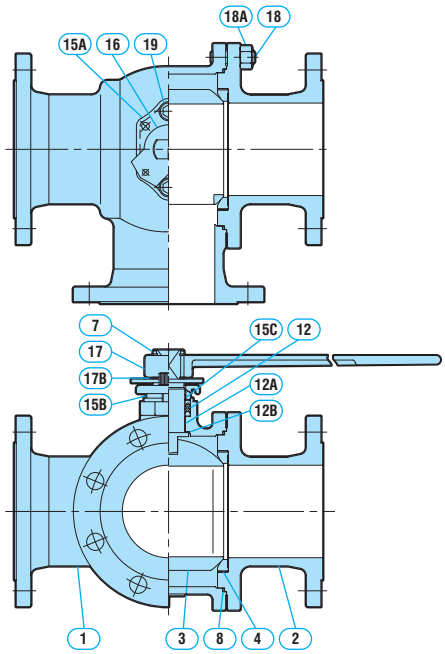

The above structure may have small differences according to the nominal size.

Parts		Material		
		E304NB-L2	E307NB-L2	E312NB-L2
1	Body	FCD400	SCS13A	SCS14A
2	Cap	FCD400	SCS13A	SCS14A
3	Ball	SCS13A or SUS304		SCS14A or SUS316
4	Seat	NTF, NCF, NGR, CFM, CFMR, CFMO		
7	Stem	SUS304		SUS316
8	Gasket	New-PTFE		
12	Packing	New-PTFE		
12A	Bearing	New-PTFE		
12B	Thrust Washer	New-PTFE		
15A	Gland Flange	SCS13A		
15B	Gland	SUS304		
15C	Bearing	New-PTFE		
16	Travel Stop	SUS304		
17	Lever	SCPH2 (DN15 to 100)		
		SCPH2 & STK490 (DN125 to 200)		
17B	Retaining Ring	SUS304		
18	Stud Bolt	SNB7	SUS304	
18A	Nut	S45C	SUS303	
19	Cap Screw	SUS304		

Applicable Class (DN15 to 200)

Body Material	Class
FCD400, SCS13A	JIS10K
SCS14A	JIS10K, CL150

Dimension

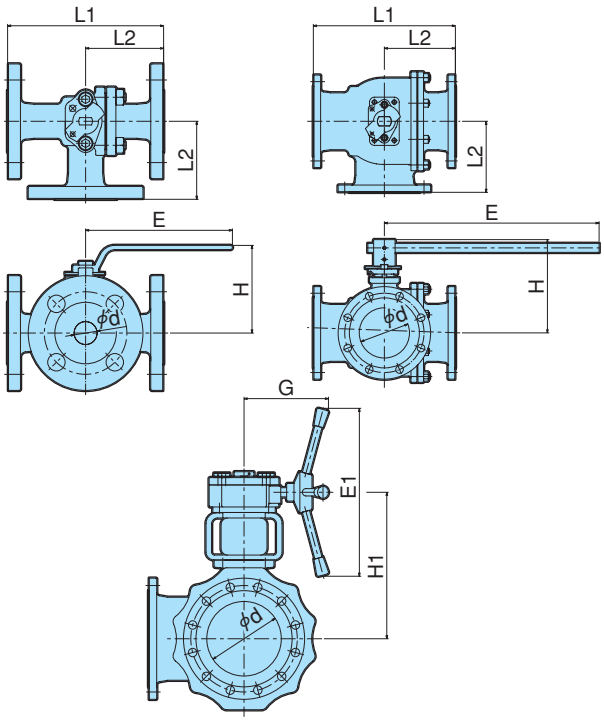

Unit: mm

Nominal size DN	d	L1	L2	H	E	H1	G	E1	Mass (Approx. kg) Stainless Cast Steel 10K Lever Operated	Mass (Approx. kg) Stainless Cast Steel 10K Gear Operated
15	13	146	73	80	130	—	—	—	2.9	—
20	19	150	75	85		—	—	—	3.6	—
25	25	170	85	100	160	—	—	—	5.6	—
40	38	200	100	115	230	—	—	—	8.8	—
50	51	230	115	120		—	—	—	11.7	—
65	64	260	130	135	350	—	—	—	19.0	—
80	76	280	140	145		—	—	—	23.0	—
100	102	340	170	180	450	280	165	240	36.0	50.0
125	127	370	185	260	650	342	190	300	60.0	87.0
150	152	430	215	280		362			79.0	106.0
200	203	520	260	350	800	425	230	460	140.0	177.0

2-2 4 Seats 3-Way Ball Valve: E300NB-T4/L4

Structure and Features

T-Port type is NDV standard but L-Port type is also available.
The valve is used for switching, separating or mixing fluid.

Parts and Materials

The materials of the components are as below as far as there are no special requests.

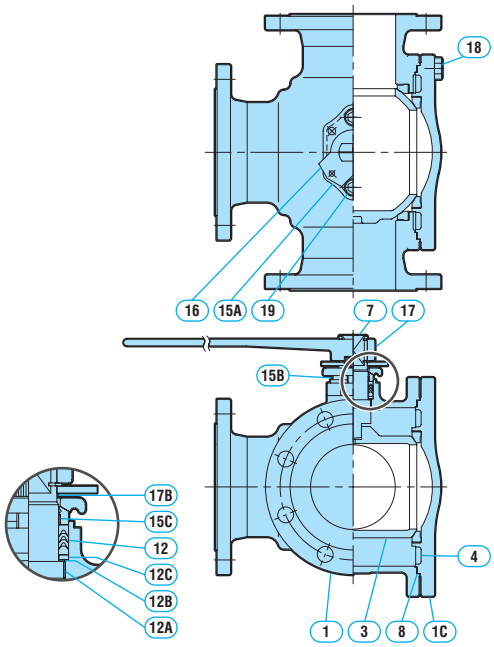

Parts		Material		
		E304NB-T4/L4	E307NB-T4/L4	E312NB-T4/L4
1	Body	FCD400	SCS13A	SCS14A
1C	Side Cover	FCD400	SCS13A	SCS14A
3	Ball	SCS13A		SCS14A
4	Seat	NTF, NCF, NGR		
7	Stem	SUS304		SUS316
8	Gasket	New-PTFE		
12	Packing	New-PTFE		
12A	Bearing	New-PTFE		
12B	Thrust Washer	New-PTFE		
12C	Washer	SUS316		
15A	Gland Flange	SCS13A		
15B	Gland	SUS304		
15C	Bearing	New-PTFE		
16	Travel Stop	SUS304		
17	Lever	SCPH2		
17B	Retaining Ring	SUS304		
18	Bolt	SUS304		
19	Cap Screw	SUS304		

Applicable Class (DN15 to 100)

Body Material	Class
FCD400, SCS13A	JIS10K
SCS14A	JIS10K, CL150

JIS20K (CL300) is also available.

Dimension

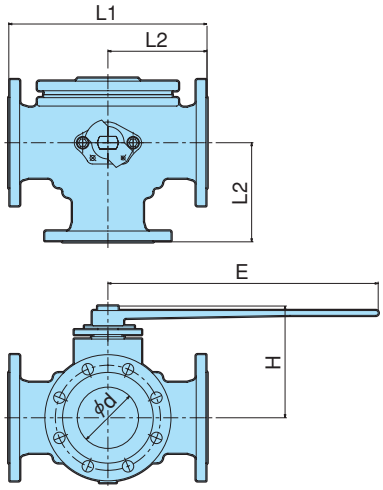

Unit: mm

Nominal size DN	d	L1	L2	H	E	Mass (Approx. kg) Stainless Cast Steel 10K
15	19	140	70	95	160	3.7
20						4.2
25	25	160	80	105	230	6.6
40	38	180	90	119		9.0
50	51	200	100	129	350	13.7
65	64	240	120	140		19.5
80	76	260	130	167	450	28.0
100	102	330	165	182		35.0

This valve is not compatible with E300NB-L2 in face to face dimension and parts.

2-3 3 Seats 3-Way Ball Valve: E300N-T3/L3

Structure and Features

T-Port type is NDV standard but L-Port type is also available.
The valve is used for switching, separating or mixing fluid.

Parts and Materials

The materials of the components are as below as far as there are no special requests.

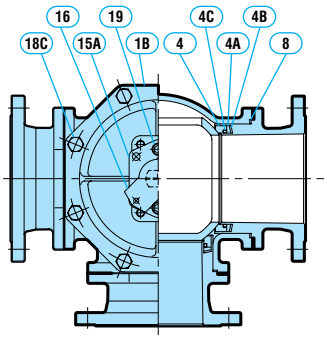

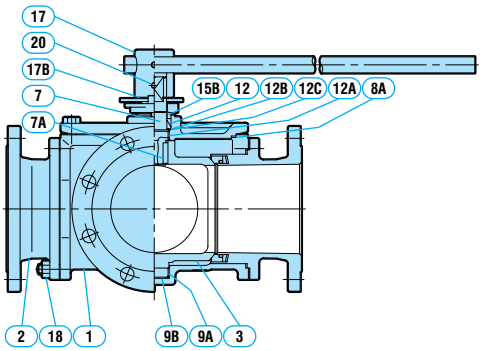

This valve is not compatible with E300NB-L2 in face to face dimension and parts.

Parts		Material			
		E304N-T3/L3	E307N-T3/L3	E312N-T3/L3	E313N-T3/L3
1	Body	FCD-S	SCS13	SCS14	SCS16
1B	Cover	FCD-S	SCS13	SCS14	SCS16
2	Body Connector	FCD-S	SCS13	SCS14	SCS16
3	Ball	SCS13		SCS14	SCS16
4	Seat	NTF, CF, GR			
4A	Spacer	SUS304		SUS316	SUS316L
4B	Spring	SUS329J3L			
4C	O-Ring	NBR (✻1)	FKM (✻2)		
7	Stem	SUS420J2	SUS304	SUS316	SUS316L
7A	Key	SUS304		SUS316	SUS316L
8	Gasket	PTFE			
8A	Gasket	PTFE			
9A	Bearing	PTFE			
9B	Thrust Washer	PTFE			
12	Packing	PTFE			
12A	Bearing	PTFE			
12B	Thrust Washer	PTFE			
12C	Washer	SUS304		SUS316	SUS316L
15A	Gland Flange	FCD400	SCS13		
15B	Gland	SUS304			
16	Travel Stop	SUS304			
17	Lever	FCD400 & STK50			
17B	Retaining Ring	SUS304			
18	Stud Bolt/Nut	SS400	SUS304		
18C	Bolt	SS400	SUS304		
19	Cap Screw	S45C	SUS304		
20	Set Screw	SUS304			

Remarks
(✻1) Fluid temperature is up to 80°C
(✻2) Fluid temperature is up to 150°C
For (✻1) and (✻2), if the fluid is solvent, the materials may not be used.

Applicable Class (DN125 to 200)

Body Material	Class
FCD-S, SCS13	JIS10K, CL150
SCS14, SCS16	JIS10K, CL150

Dimension

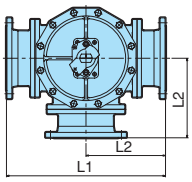

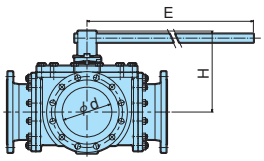

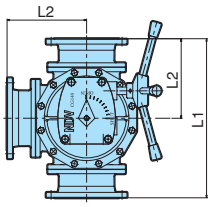

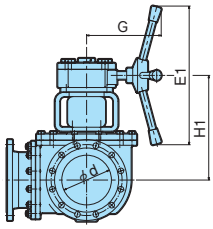

Unit: mm

Nominal size DN	d	L1	L2	H	E	H1	G	E1	Mass (Approx. kg) Stainless Cast Steel 10K Lever Operated	Mass (Approx. kg) Stainless Cast Steel 10K Gear Operated
125	127	430	215	260	800	340	230	460	82.5	110.0
150	152	500	250	275		352			104.0	132.0
200	203	650	325	335	1100	434	260		177.0	226.0

3

V-Port Valve

Structure and Feature of V-Port Valve

Reference for Seat Selection

3. V-Port Valve: V100ND(NC)

Structure and Feature of V-Port Valve

Structure and Features

V-Port Valve is the most suitable for resin pellet (nylon etc.), powder (fly ash etc.), paper mill (pulp fluid), slurry (steel mill, muddy water, lime milk etc.) and any other high viscous fluid.
The valve has high performance for heat resistance, abrasion resistance and flow control.

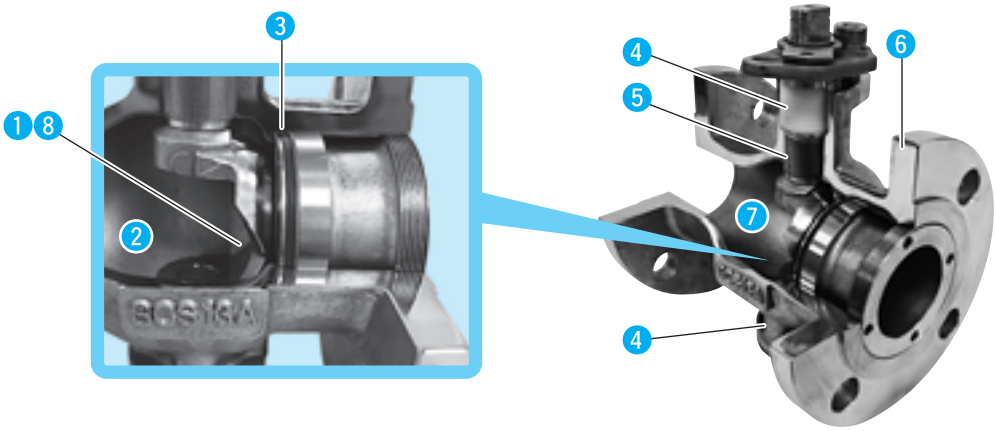

Ball

❶ V-Cut Ball

The valve is effective to cut cellulose or solid matter by V shaped opening of the half-sphere ball.
The valve is superior for abrasion resistance by stelite applied to seat side and lapping applied surface of ball. (note; For soft seta , hard chrome plated.)

❷ Pocketless Structure

Since seat is located at inlet side only, congestion of fluid or clogging between ball and body will not occur. By this seal configuration, abnormal pressure rise will not occur too.

❸ Seat with Heat Resistance and Abrasion Resistance

The seat has both rigidity and flexibility, therefore, it can seal from vacuum to high pressure without an influence by temperature and/or pressure difference. The valve is usable in high temperature if metal seat is applied. The seat has high abrasion resistance against abrasive fluid such as slurry and powder. (The details about the seat are described in the next page.)

❹ Stable Bearing Configuration

Reinforced PTFE is applied to bearings for stem and trunnion and therefore, the operation torque is low and the frequent operation is possible.

❺ Gland Packing with Superior Sealing

Perfect sealing is possible from vacuum condition to high pressure condition by applying V-Packing. (V100ND)

❻ Integrated Body

The valve body is an all integrated body. Therefore, there are no fluctuations in torque by piping stress, no deterioration of sealing or no external leakage.

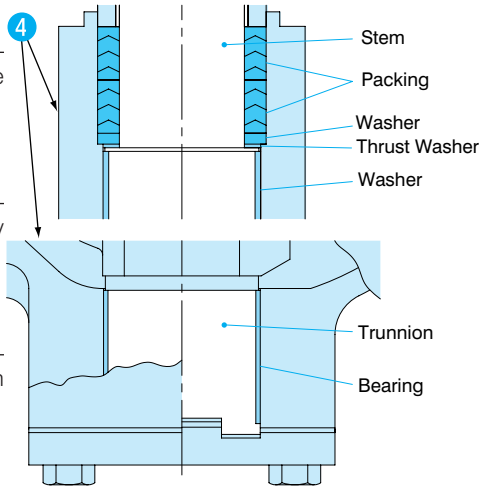

❼ Full Flow

When the valve is fully opened, the flow passage is almost straight, minimizing pressure loss and ensuring a full capacity flow. Slurry or high viscous fluids can flow the passage smoothly without congestion or cavitation.

❽ Flow Control

The V-shaped cut ball increases rangeability and enhance flow rate control ability. The flow characteristics are almost equal percentage.

Reference for Seat Selection

Seat Specification and Features (V100ND)

- **Solid (thick) Seat**, **Thin Seat** and **Soft (Reinforced PTFE) Seat** are available for wide range purposes.
- The above three kinds of seats are compatible.
- Outer diameter has a clearance C. By placing the seat on the spherical surface of the ball, seal surface of the seat becomes centripetal and equal contact can be obtained.

Solid (thick) Seat (Code: ST)

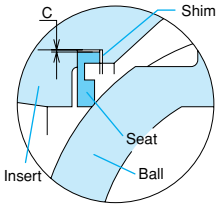

SUS316 (Stellite at seal surface). When the insert is tightened, a notch at the backside of the seat makes cantilever action and seal surface of the seat adheres to the surface of the ball.

Application: resin pellet, powder, slurry, high viscous fluid

Thin Seat (Code: M)

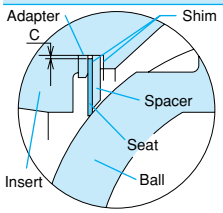

Thin spring plate of SUS316H. The principle of the seal is cantilever as same as the solid seat.
However, since the flexibility is better, the leakage tolerance and the torque of the valve can be minimized than the solid seat.

Application: cellulose fluid, viscous fluid, sludge

Soft Seat (Code: CF)

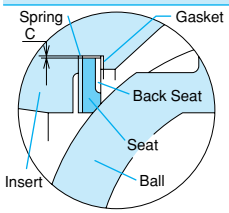

Carbonfiber reinforced PTFE. Since the seat spring acts as cantilever, more stable sealing than thin seat can be obtainable.

Application: water, oil, air, for on-off control of clean fluid

Allowable Seat Leakage

Kind of Seat	Allowable Leakage	Applicable Code
Solid Seat (ST)	0.5% of rated Cv	ANSI B16.104 Class II and IEC534-4 Class II
Thin Seat (M)	0.0005% of rated Cv	ANSI B16.104 Class IV 1/20 and IEC534-4 Class IV-S1
Soft Seat (CF)	Zero leakage	—

Remark: Solid seat with allowable leakage of 0.002% is also available.

Working Pressure and Temperature Range

CF: ①
M : ②
ST: ③

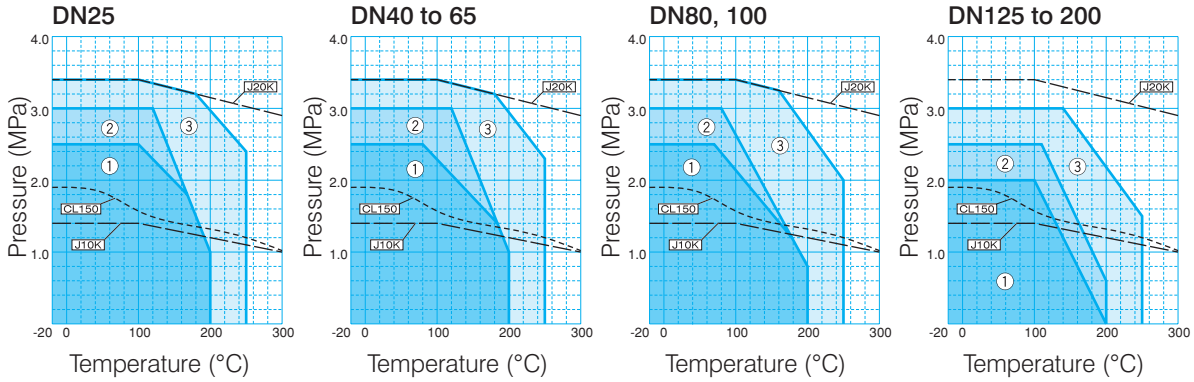

✻ DN125 to 200 is V100NC.

Flow Characteristics

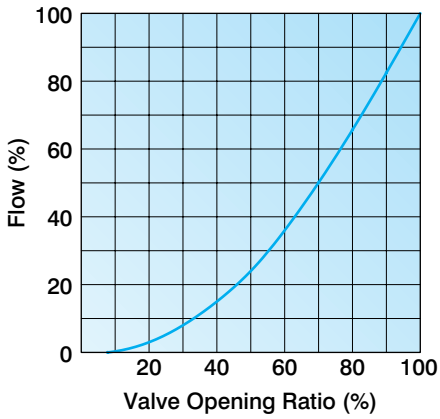

Flow Coefficient Cv Value (Adjusted Cv value considering rated Cv and effects by reducer)

DN	Rated Cv	D×DN	Adjusted Cv	D×DN	Adjusted Cv	D×DN	Adjusted Cv
25	28	40×25	23	50×25	21	65×25	20
40	75	50×40	68	65×40	60	80×40	55
50	153	65×50	127	80×50	110	100×50	95
65	250	80×65	218	100×65	185	125×65	165
80	350	100×80	312	125×80	270	150×80	245
100	540	125×100	480	150×100	430	200×100	360
125	930	150×125	835	200×125	675	250×125	575
150	1320	200×150	1110	250×150	950	300×150	830
200	2000	250×200	1800	300×200	1620	350×200	1500

Adjusted Cv based on the reducer type

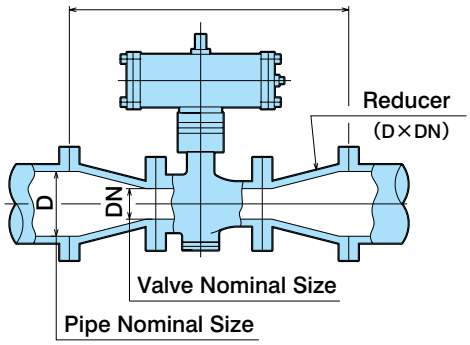

Cv value Calculation

Fluid		Formula
Liquid	General	$C_V=11.56V\sqrt{\dfrac{G}{(P_1\text{-}P_2)}}$
	Viscous Fluid	$C_V=11.56V\cdot R\cdot\sqrt{\dfrac{G}{(P_1\text{-}P_2)}}$
Gas	$\Delta P<\dfrac{P_1}{2}$	$C_V=\dfrac{Q}{2.93}\sqrt{\dfrac{G(273+t)}{\Delta P(P_1+P_2)}}$
	$\Delta P\geq\dfrac{P_1}{2}$	$C_V=\dfrac{Q\sqrt{G(273+t)}}{2.538P_1}$
Steam	$\Delta P<\dfrac{P_1}{2}$	$C_V=\dfrac{WK}{0.1391\sqrt{\Delta P(P_1+P_2)}}$
	$\Delta P\geq\dfrac{P_1}{2}$	$C_V=\dfrac{WK}{0.1205P_1}$

V: Maximum Flow (m^3/hr)
G: Gravity (water: 1, air: 1)
P1: Valve inlet pressure (kPa·A)
P2: Valve outlet pressure (kPa·A)
ΔP: P1-P2 (kPa)
R: Viscosity correction factor
t: Temperature(°C)
Q: Maximum Flow (15.6°C, 101.3 kPa)
W: Maximum Flow (kg/hr)
K: 1+(0.0013 x Superheated value°C)

Superheated value:
Temperature difference (t-t1) between saturate temperature (t) in absolute pressure at valve inlet and temperature at valve inlet (t1).
For saturated steam, superheated value is assumed to be zero.

Pulp Density Correction Value

Density (%)	Correction Factor (K1)
1	1
2	1.1
3	1.2
4	1.4
5	1.9

Remarks:
1. Viscosity correction factor R will be applied when the fluid is more than 20cSt.
2. Pulp density correction will be calculated by multiplying Cv value with K1 (Viscous fluid formula to be used.)

3 V-Port Valve: V100ND

Specification

Type	V100ND	V100NC
Nominal Size (*1)	DN25 to 100	DN125 to 200
Face to Face Dimension	According to ISO5752	
Connection type	Flange type: JIS10K, 20K • Class (ASME, JPI) 150, 300	
Body Material (*2)	SCS13A (CF8) SCS14A (CF8M)	SCS13 SCS14
Ball Material / Seat Material	According to the combination of Ball and Seat	
Operation type	Lever, Gear, Pneumatical, Electrical	

*1: DN20 and over 250 are also available.
*2: FCD is also available.

Parts and Materials

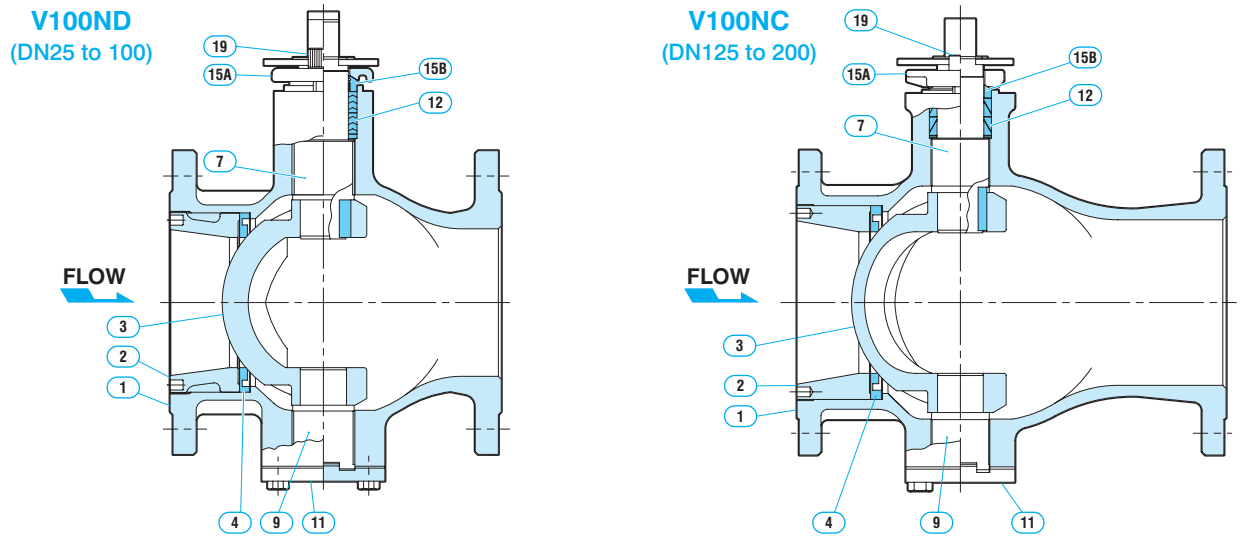

Parts		Material			
		V107ND	V107NC	V112ND	V112NC
1	Body	SCS13A	SCS13	SCS14A	SCS14
2	Insert	SCS13A	SUS304	SCS14A	SUS316
3	Ball	SCS11 (ST) SCS11 (Hcr.P)		SCS11 (ST) SCS11 (Hcr.P)	
4	Seat	SUS316 (ST) SUS316H (M) Reinforced PTFE (CF)		SUS316 (ST) SUS316H (M) Reinforced PTFE (CF)	
7	Stem	SUS316		SUS316	
9	Trunnion	SUS316		SUS316	
11	Trunnion Cover	SUS316		SUS316	
12	Packing	New-PTFE	PTFE	New-PTFE	PTFE
15A	Gland Flange	SCS13A	SCS13	SCS13A	SCS13
15B	Gland	SUS304		SUS304	
19	Cap Screw	SUS304		SUS304	

Combination of Ball and Seat

Type	V100ND, V100NC	
	Ball	Seat
Solid Seat (thick)	SCS11+ST	SUS316 + ST
Thin Seat	SCS11+Hcr.P	SUS316H
Soft Seat (Reinforced PTFE)		Reinforced PTFE(CF)

•ST: Stellite •Hcr.P: Hard chrome plating

Valve Codes

Valve Code for V100ND

V 1 0 7 N D - C F - 0 5 0 - J 1 0 K R F

❶ ✻ ❷ ❸ ❹

V100ND (NC) (V-Port Valve)

❶ Body Material

07	SCS13A
12	SCS14A

❷ Seat Material (Refer to P 29)

ST	Solid Seat
M	Thin Seat
CF	Soft Seat

❸ Nominal Size (DN or A)

Conforming to ISO6708 and JIS B2001

❹ Connection

J10KRF	JIS 10KRF
J20KRF	JIS 20KRF
A150RF	ASME CL150

✻ Improvement Identification Code

None	Original Design
N	First Improvement
NB	Second Improvement
NC	Third Improvement
ND	Fourth Improvement

Dimension

V100ND (NC) · VG100ND (NC)

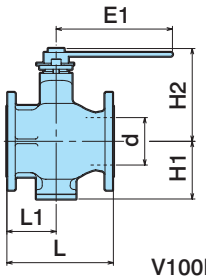

V100ND

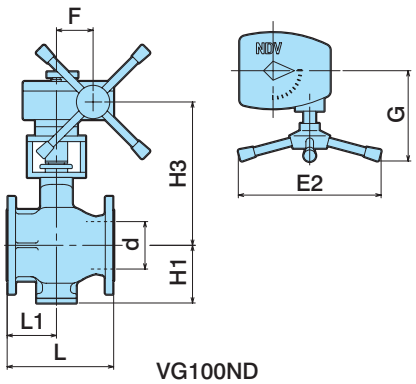

VG100ND

Unit: mm

Nominal size DN	d	L 10K CL150	L 20K	L1	H1	H2	E1 10K CL150	E1 20K	H3 10K CL150	H3 20K	G 10K CL150	G 20K	F 10K CL150	F 20K	E2 10K CL150	E2 20K	Mass (Approx. kg) Lever Operated 10K CL150	Lever Operated 20K	Gear Operated 10K CL150	Gear Operated 20K
	Lever Operated Valve								Gear Operated Valve											
25	25	127	165	55	48	108	160	160	—	—	—	—	—	—	—	—	3.8	5.0	—	—
40	38	165	190	70	71	135	230	230	—	—	—	—	—	—	—	—	6.8	8.5	—	—
50	51	178	216	75	77	140			—	—	—	—	—	—	—	—	8.1	10.5	—	—
65	64	190	241	80	96	163	350	350	—	—	—	—	—	—	—	—	13.0	15.5	—	—
80	76	203	283	90	101	168			—	—	—	—	—	—	—	—	14.0	17.0	—	—
100	102	229	305	106	131	209	450	450	311	316	165	190	62.5	77	240	300	21.0	26.5	38.0	49.0
125	127	356	381	145	163	295	650	800	378	378	190	230	77.0	90.5	300	460	44.0	50.0	77.0	81.0
150	152	394	403	150	173	307			388	388							55.0	64.0	90.0	95.0
200	203	457	502	200	211	368	800	1000	446	464	230	260	90.5	121	460		86.0	98.0	135.0	150.0

4

Pneumatically Operated Valve

Torque Actuator: 04DN to 12DN

Torque Actuator for Large Bore: 13D to 25D

Selection for Actuator

4-1. Pneumatically Operated 2-Way Ball Valve

- Fire Safe Type Ball Valve: FPN(PO,PC)1100NB
- Jacketed Ball Valve: EPN(PO,PC)1100JNC
- Extended Gland Type Ball Valve: FEXPN(PO,PC)1100NB

4-2. Pneumatically Operated 3-Way Ball Valve

- 2 Seats 3-Way Ball Valve: EPN(PO,PC)1300NB-L2
- 4 Seats 3-Way Ball Valve: EPN(PO,PC)1300NB-T4/L4
- 3 Seats 3-Way Ball Valve: EPN(PO,PC)1300N-T3/L3

4-3. Pneumatically Operated V-Port Valve: VPN(PO,PC)1100ND(NC)

4-4. References for Pneumatically Operated Valve

Torque Actuator: 04DN to 12DN

Structure and Features

1. Compact and light weight with double pistons type.
2. Environment-concious type paint is used.
3. Sealing capability has improved by increasing the number of O-Ring at upper and lower position of drive shaft from 1 to 2 each.
4. Air inlet connection conforms to NAMUR standard(*).

*: The code VDI/VDE3845-2010 for the size of the attachments of actuators

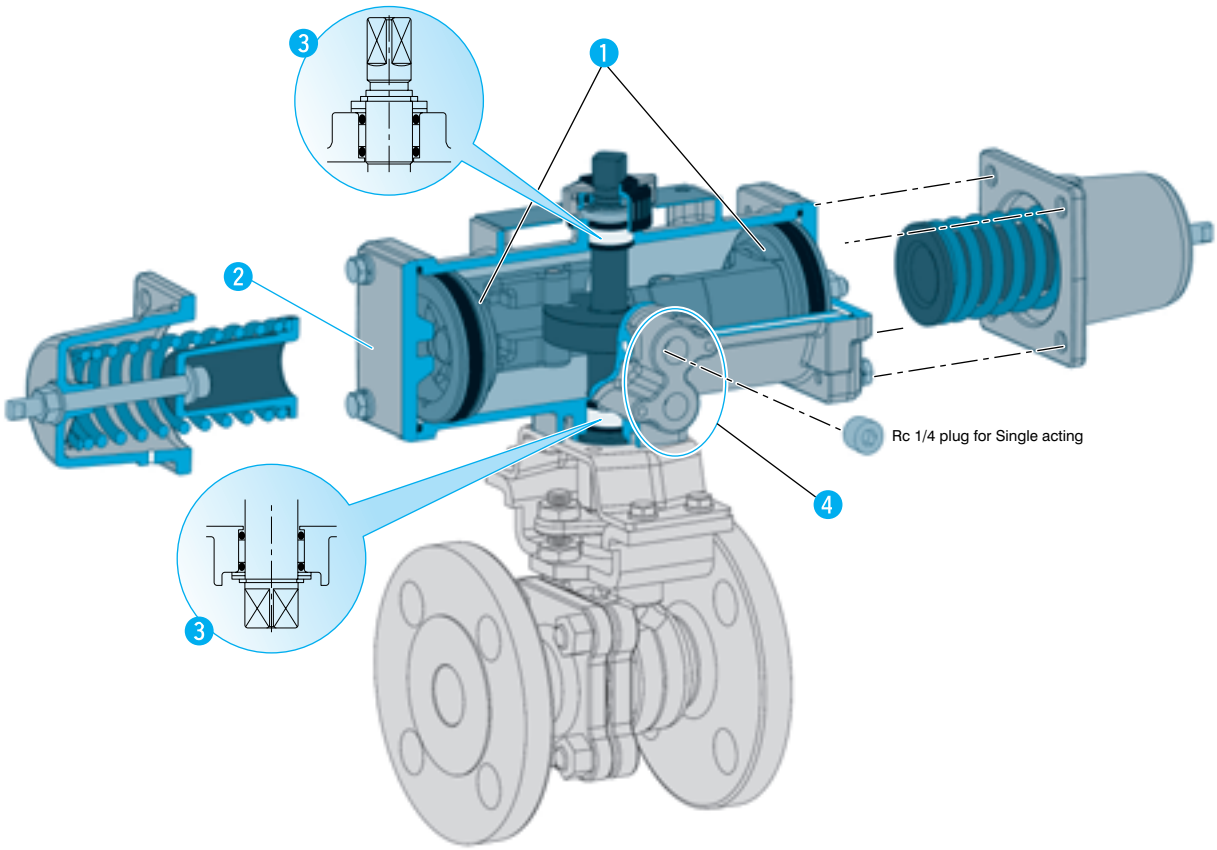

Specification

Operation Type	Double Acting: PN (Air to Open / Air to Close) Single Acting: Reverse Acting PO (Air to Open / Spring to Close) Direct Acting PC (Air to Close / Spring to Open)
Operating Pressure	0.4 to 0.7MPa (Option: 0.3MPa)
Materials	Cylinder: ADC12 (Aluminum Die-cast) Spring Cover: ADC12 Drive Shaft: SCM435
Ambient Temperature	-10 to 50°C *except frozen condition (Please consult with NDV if the ambient temperature is more than 50°C)
Rotation Angle	Partial turn 0 to 90°
Manual Operation	Manual operating device is installable. *In case of double acting, lever operation is possible by installing by-pass at air chambers or by atmospheric discharge.
Air Inlet Connection	Rc1/4 (Solenoid valve connection: NAMUR Standard)
Painting for Actuator	Platinum Silver (conforming to RoHS)
Lubricant Oil	Shell Arbania EP2 grease (conforming to RoHS)
Durability	More than 100,000 times (with load) *not guaranteed value

Parts and Materials

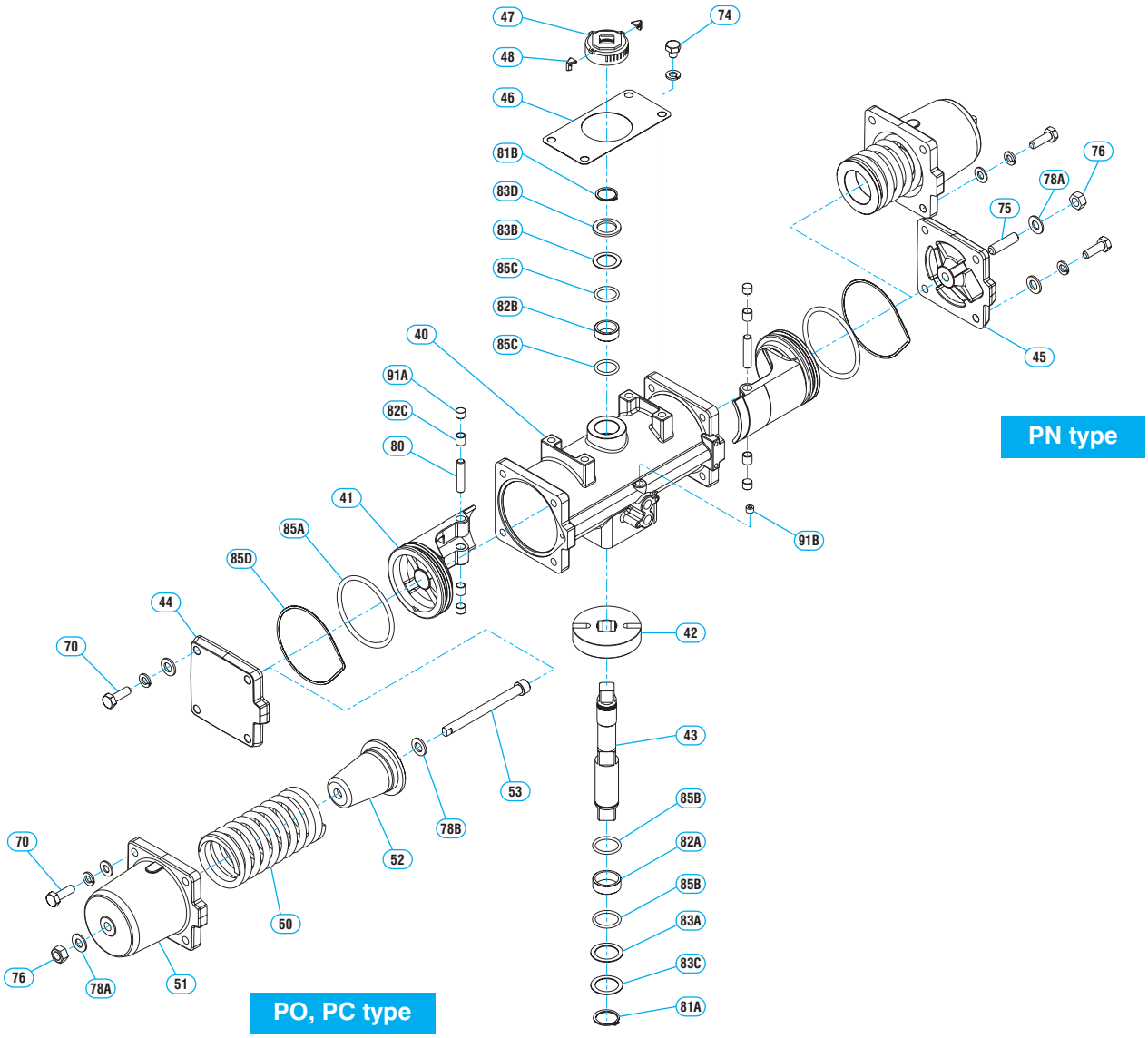

No.	Parts	Materials
40	Cylinder	ADC12
41	Piston	FCD400
42	Scotch York	SMF5030, S45C (✻)
43	Drive Shaft	SCM435
44	Cover A	ADC12
45	Cover B	ADC12
46	Nameplate	A1100P
47	Cap	ABS
48	Indicator	Polypropylene
50	Coil Spring	Spring Steel
51	Spring Cover	ADC12
52	Spring Bearing	S20C, FCD400
53	Cap Screw	SUS304

✻: 10DN, 12DN

No.	Parts	Materials
70	Bolt	SUS304
74	Pan Head Screw (dia.40, 50, 63, 80)	SUS304
	Bolt (dia.100, 125)	SUS304
75	Socket Screw	SUS304
76	Nut	SUS304
78A	Seal Washer	SS & NBR
78B	Washer	SPCC
80	Straight Pin	SUS630
81A	Snap Ring	SUS304
81B	Snap Ring	SUS304
82A	Bearing	Polyacetal

No.	Parts	Materials
82B	Bearing	Polyacetal
82C	Bearing	SS & fluorocarbon
83A	Thrust Bearing	Polyacetal
83B	Thrust Bearing	Polyacetal
83C	Thrust Bearing	SUS304
83D	Thrust Bearing	SUS304
85A	O-Ring	NBR
85B	O-Ring	NBR
85C	O-Ring	NBR
85D	O-Ring	NBR
91A	Plug	C3602
91B	Plug (dia.40,100,125)	SUS304

Torque Actuator for Large Bore: 13D to 25D

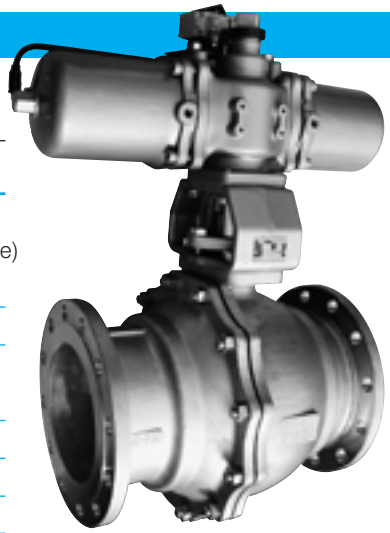

Structure and Features

Double Cylinder 90° Rotation Piston type Actuator with Scotch York.

Operation Type	Double Acting: PN (Air to Open / Air to Close) Single Acting: Reverse Acting PO (Air to Open / Spring to Close) Direct Acting PC (Air to Close / Spring to Open)
Operating Pressure	0.4 to 0.7MPa (Option: 0.3MPa)
Ambient Temperature	-10 to 50°C ✻except frozen condition (Please consult with NDV if the ambient temperature is more than 50°C)
Rotation Angle	Part turn 0 to 90°
Manual Operation	Manual operating device is installable.
Painting for Actuator	Silver (conforming to RoHS)

Parts and Materials

Double Acting

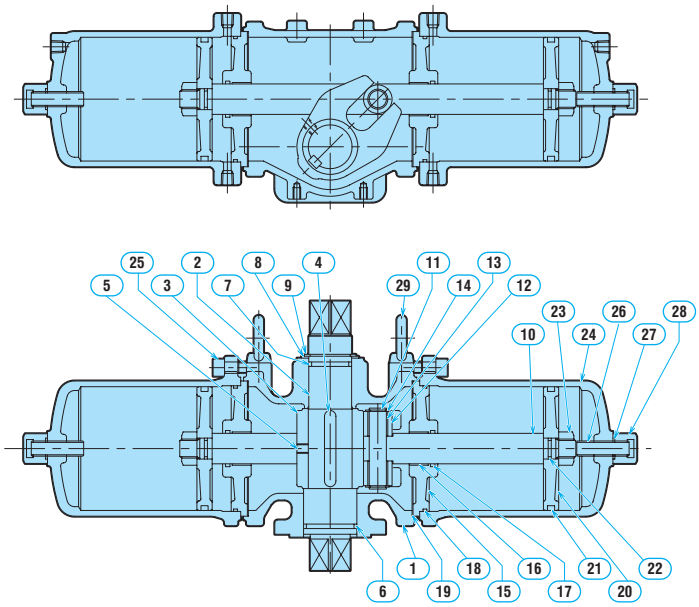

Single Acting

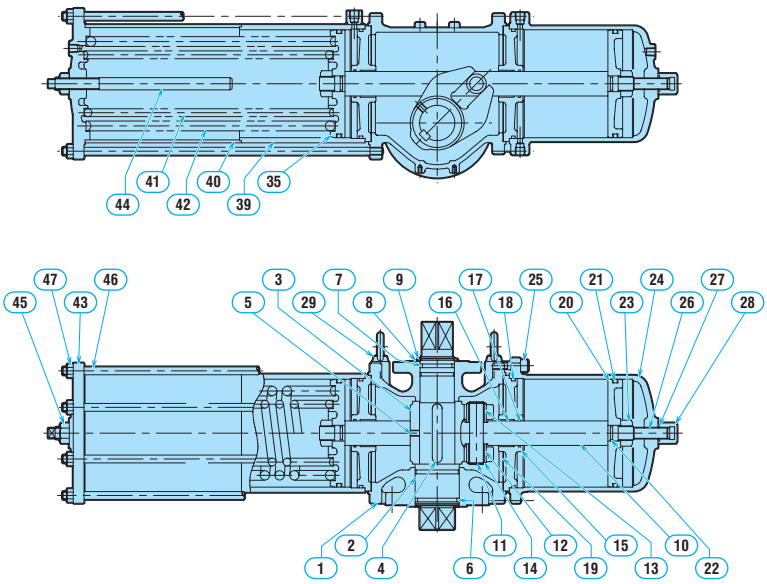

No.	Parts	Materials
1	Bracket	FC200
2	Shaft	S45C
3	Parallel Arm	FCD450
4	Key	S45C
5	Nut	SCM435
6	O-Ring	NBR
7	O-Ring	NBR
8	Thrust Bearing	NYLON
9	Stop Ring	SK5
10	Piston Rod	S45C
11	Pin	S45C
12	Roller	S45C
13	Bearing	SS & POM
14	Stop Ring	SK5
15	Distance	FC200
16	Bearing	SS & POM
17	O-Ring	NBR
18	O-Ring	NBR
19	Gasket	T#1995
20	Piston	FC200
21	O-Ring	NBR
22	O-Ring	NBR
23	Nut	SS400
24	Cylinder	FCD450
25	Cap Screw	SCM435
26	Stopper Bolt	SCM435
27	O-Ring	NBR
28	Cap Nut	SS400
29	Eye Bolt	SS400
35	Piston	FCD450
39	Cylinder	STKM
40	Spring Case	SGP
41	Spring (inside)	SUP9
42	Spring (outside)	SUP9
43	Cover	FCD450
44	Stopper Bolt	SS400
45	Nut	SS400
46	Long Bolt	S45C
47	Nut	SS400

Selection of Actuator

Selection by Operating Condition

A required torque to operate a valve is different by the fluid condition, the fluid temperature, the seat material or the shutoff differential pressure even if the valve diameter is the same. Therefore, an appropriate actuator must be selected considering conditions to affect the valve torque.

Valve Type: F100NB, E100JNC, E300NB, E300N

Condition		Factor
Seat Material	NTF	a
	NCF	b
	NGR	c
Fluid State	Clean (less than 100cP)	a
	Solvent, Viscous (100 to 500cP)	b
	Sludge, Contamination (Slurry, Iron Powder), Powder, High Viscous Fluid	c
Fluid Temp.	-20 to 150°C	a
	-100 to -21°C, 151 to 200°C	b

Combination of Factor	Rank
3a	A
2a+b, a+2b	B
2a+c, 2b+c, a+b+c, 3b, 2c+a, 2c+b	C

Valve Type: V100ND (NC)

Category	Used Condition (Note 1)	Selection (Note 2)			
		Seat	Operation		Rank
			ON-OFF	Control	
1	Clean Fluid	CF	◎	△	A
		M	○	◎	B
2	Sludge, Viscous Fluid (less than 500CP), Fluid with Fiber, Powder (Soft not including solid matter)	CF	□	△	B
		M	◎	◎	B
		ST	○	○	B
3	Powder (Soft including solid matter)	M	◎	□	B
		ST	○	◎	B
4	High Viscous Fluid (Gum)	M	□	□	C
		ST	◎	◎	C
5	Slurry, Powder (Hard)	ST	◎	◎	C

Note 1: Examples of fluid

Category 1:
Water, Gas, Solvent

Category 2:
Sludge (not including solid matter), Sugar solution, Pulp liquor, Food powder

Category 3:
Food powder, Resin powder (not abrasive)

Category 4:
Latex, Viscose

Category 5:
Coal ash, Coke powder, Resin powder

Note 2

◎: Recommendable to use
○: Possible to use
□: Not recommendable to use
△: Not suitable to use

4-1 Pneumatically Operated 2-Way Ball Valve

Valve Codes

Valve Code for FPN(PO,PC)1100NB, EPN(PC,PO)1100NB

FPN1107NB-NTF-050-06DN-J10KRF

❶ ❷ ❸ ✻ ❹ ❺ ❻ ❼

F100NB (Fire Safe Type Ball Valve)

EPN1112JNC-NTF-050-06DN-J10KRF

❶ ❷ ❸ ✻ ❹ ❺ ❻ ❼

E100JNC (Jacketed Type)

FEXPN1107NB-NTF-050-06DN-J10KRF

❶ ❷ ❸ ✻ ❹ ❺ ❻ ❼

FEX100NB (Extended Gland Type)

❶ Operation Type

PN	Double Acting Type
PO	Reverse Acting Type (Air to Open)
PC	Direct Acting Type (Air to Close)

❷ 1

Pneumatically Operated Type On-Off Valve

❸ Body Material

04	FCD400
07	SCS13A
12	SCS14A
13	SCS16A

❹ Seat Material (refer to P10)

NTF, NCF, NGR, CFM, CFMR

❺ Nominal Size (DN or A)

Conforming to ISO 6708 and JIS B 2001

❻ Actuator Type (04DN to 12DN, 13D to 25D)

❼ Connection

J10KRF	JIS 10KRF
J20KRF	JIS 20KRF
A150RF	ASME CL150
A300RF	ASME CL300

✻ Improvement Identification Code

None	Original Design
N	First Improvement
NB	Second Improvement
NC	Third Improvement
ND	Fourth Improvement

4-1 Pneumatically Operated 2-Way Ball Valve Fire Safe Type: FPN(PO, PC)1100NB

Actuator Selection Table

Valve Type: FPN1100NB-15/200, EPN1100JNC-15/200, FEXPN1100NB-15/150 (Double Acting Type)

Operating Pressure: 0.4MPa

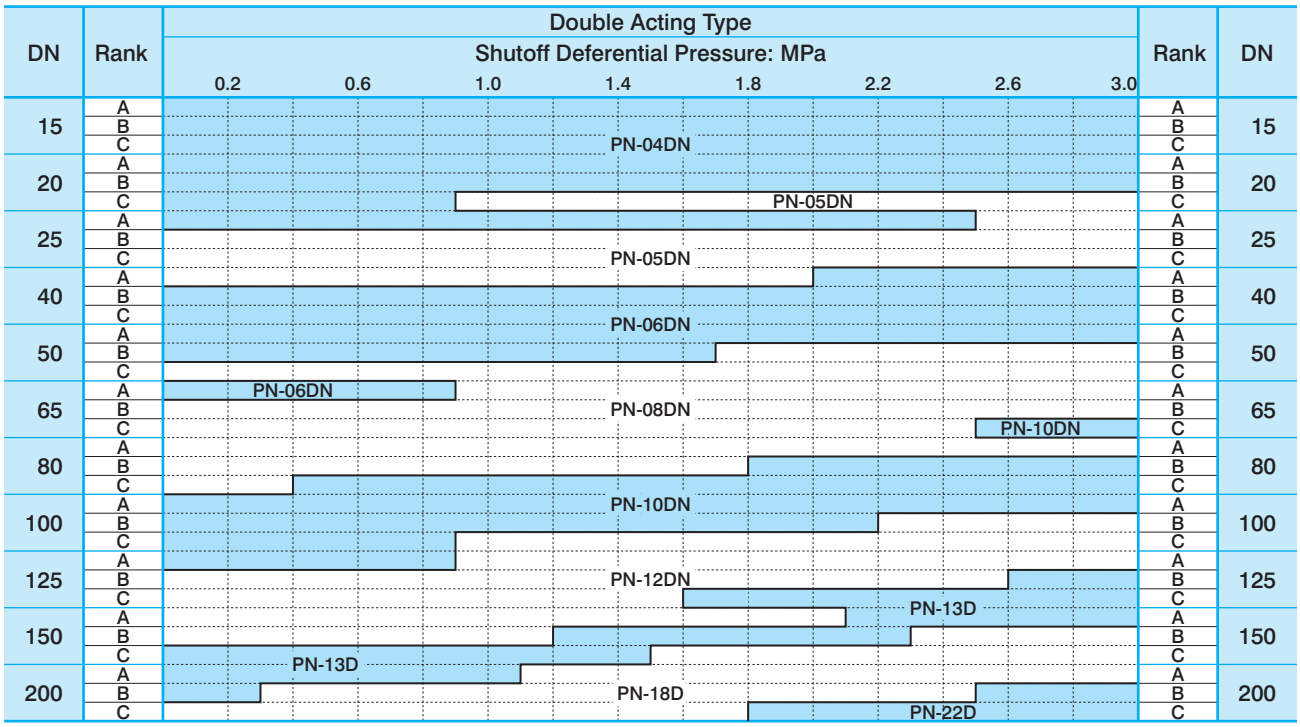

Valve Type: FPO1100NB-15/200, EPO1100JNC-15/200, FEXPO1100NB-15/150 (Single Acting Type)

Operating Pressure: 0.4MPa

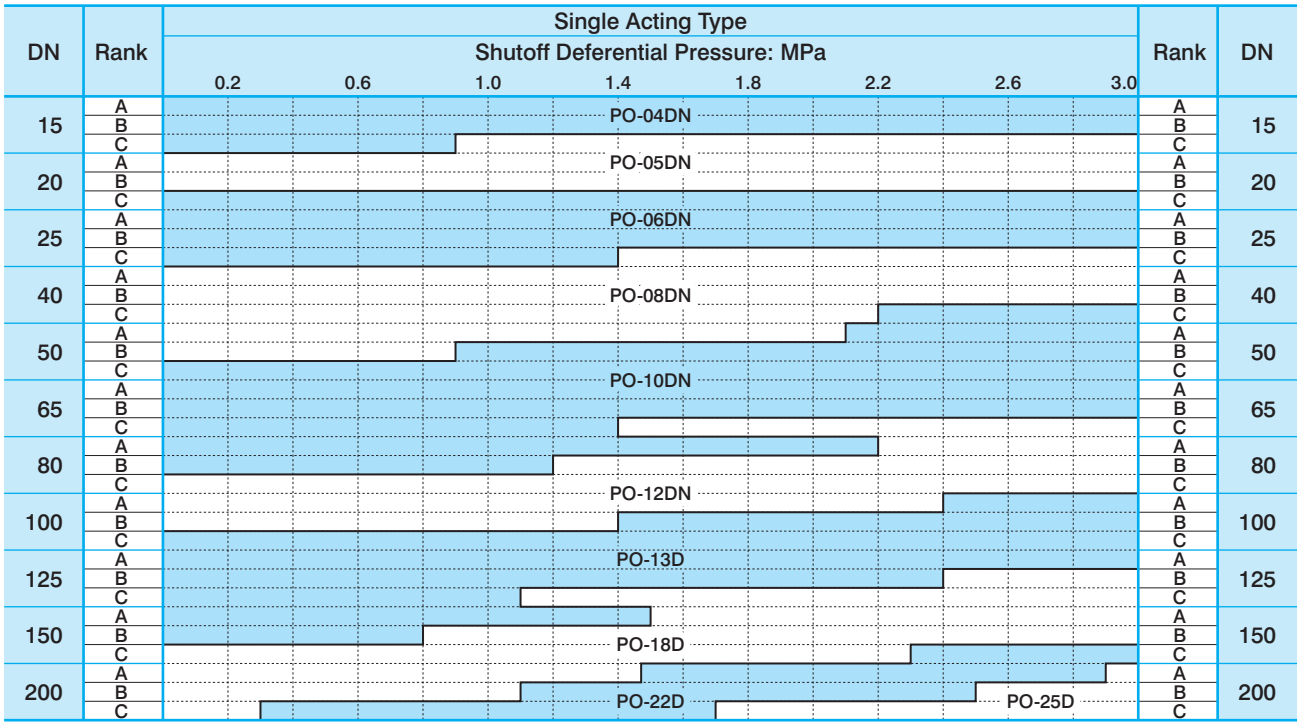

Dimension

Valve Type: FPN1100NB (Double Acting Type, Full-Port)

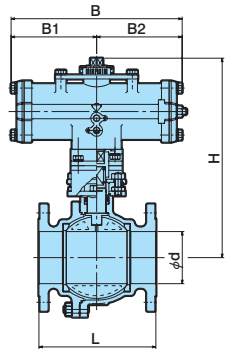

FPN1100NB (04DN to 12DN)

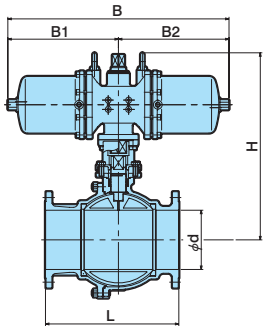

FPN1100NB (13D to 22D)

Unit: mm

Nominal size DN	d	L 10K CL150	L 20K CL300	Actuator Code	B	B1	B2	H	Mass (Approx. kg) Stainless Cast Steel 10K CL150	Mass (Approx. kg) Stainless Cast Steel 20K CL300
15	13	108	140	PN-04DN	144	B/2	B/2	175	3.0	3.4
20	19	117	152					179	3.6	4.1
				PN-05DN	172			192	4.0	4.5
25	25	127	165	PN-04DN	144			193	5.0	5.7
				PN-05DN	172			206	5.5	6.2
40	38	165	190					224	8.9	9.7
				PN-06DN	214			240	9.9	10.7
50	51	178	216					248	11.8	13.4
				PN-08DN	266			269	15.8	17.4
65	64	190	241	PN-06DN	214			276	17.3	20.8
				PN-08DN	266			297	19.8	23.3
				PN-10DN	336			345	28.0	31.5
80	76	203	283	PN-08DN	266			307	22.9	29.4
				PN-10DN	336			355	28.6	35.1
100	102	229	305					390	39.0	50.5
				PN-12DN	420			420	49.0	60.5
125	127	356	381	PN-10DN	336			426	52.5	65.5
				PN-12DN	420			459	69.5	82.5
				PN-13D	644			505	86.0	99.0
150	152	394	403	PN-12DN	420			479	84.5	98.5
				PN-13D	644			525	101.0	115.0
				PN-18D	758			596	138.0	152.0
200	203	457	502	PN-13D	644			579	143.0	168.0
				PN-18D	758			641	180.0	205.0
				PN-22D	988			752	260.0	285.0

Valve Type: FPO1100NB (Single Acting Type, Full-Port)

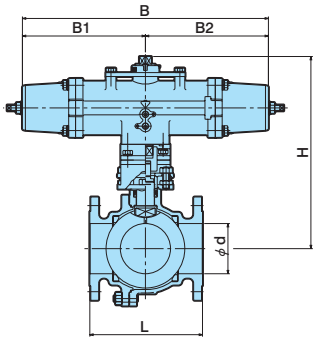

FPO1100NB (04DN to 12DN)

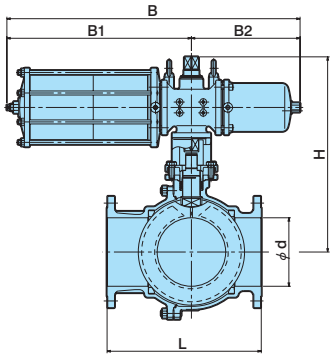

FPO1100NB (13D to 25D)

Unit: mm

Nominal size DN	d	L 10K CL150	L 20K CL300	Actuator Code	B	B1	B2	H	Mass (Approx. kg) Stainless Cast Steel 10K CL150	Mass (Approx. kg) Stainless Cast Steel 20K CL300
15	13	108	140	PO-04DN	212	B/2	B/2	175	3.5	3.9
				PO-05DN	268			188	4.4	4.8
20	19	117	152					192	5.2	5.7
				PO-06DN	314			208	6.7	7.2
25	25	127	165					222	8.3	9.0
				PO-08DN	392			261	15.4	15.8
40	38	165	190							16.2
				PO-10DN	214			309	24.0	24.8
50	51	178	216	PO-08DN	392			269	17.3	18.9
				PO-10DN	500			317	26.0	27.6
65	64	190	241					345	33.0	36.5
				PO-12DN	634			376	45.0	48.5
80	76	203	283	PO-10DN	500			355	36.1	42.6
				PO-12DN	634			386	48.1	54.6
100	102	229	305					420	59.5	71.0
				PO-13D	869	547	322	466	97.0	109.0
125	127	356	381					505	118.0	131.0
				PO-18D	1013	634	379	576	178.0	191.0
150	152	394	403	PO-13D	869	547	322	525	133.0	147.0
				PO-18D	1013	634	379	596	193.0	207.0
				PO-22D	1272	778	494	673	253.0	267.0
200	203	457	502	PO-18D	1013	634	379	641	235.0	260.0
				PO-22D	1272	778	494	752	333.0	358.0
				PO-25D	1671	1036	635	789	467.0	492.0

4-1 Pneumatically Operated 2-Way Ball Valve Jacketed Type: EPN(PO, PC)1100JNC

Dimension

Valve Type: EPN1100JNC (Double Acting Jacketed Type)

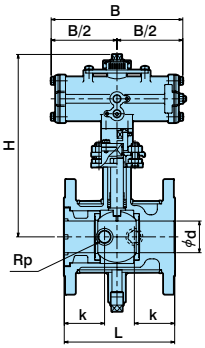

EPN1100JNC (04DN to 12DN)

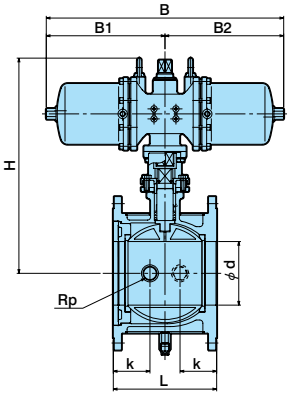

EPN1100JNC (13D to 18D)

Unit: mm

Nominal size DN	d	L	k	Rp	Flange Nominal Size DN	Actuator Code	B	B1	B2	H	Mass (Approx. kg) Stainless Cast Steel 10K CL150
15	13	108	54	1/2	40	PN-04DN	144	B/2	B/2	223	6.4
20	19	117	58.5							227	6.6
						PN-05DN	172			240	7.0
25	25	127	63.5		50	PN-04DN	144			238	7.8
						PN-05DN	172			251	8.3
40	38	165	60		65					270	13.6
						PN-06DN	214			286	14.6
50	51	178	65		80					295	16.5
						PN-08DN	266			316	20.5
65	64	190			100	PN-06DN	214			331	23.8
						PN-08DN	266			352	26.3
80	76	203	70		125					362	33.4
						PN-10DN	336			408	39.1
100	102	229	75		150					421	55.0
						PN-12DN	420			454	65.0
125	127	267	80	3/4	200	PN-10DN	336			471	73.5
						PN-12DN	420			504	90.5
						PN-13D	644			550	107.0
150	152	292	85		250	PN-12DN	420			524	121.5
						PN-13D	644			570	138.0
						PN-18D	758			641	175.0
200	203	330	90		350	PN-13D	644			625	207.0
						PN-18D	758			687	244.0

Valve Type: EPO1100JNC (Single Acting Jacketed Type)

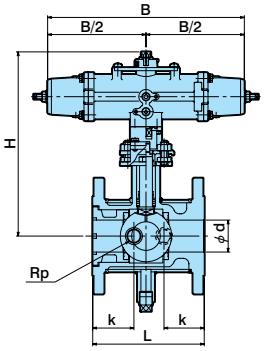

EPO1100JNC (04DN to 12DN)

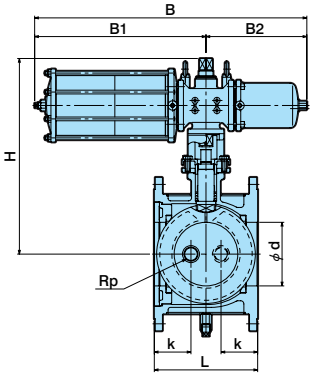

EPO1100JNC (13D to 22D)

Unit: mm

Nominal size DN	d	L	k	Rp	Flange Nominal Size DN	Actuator Code	B	B1	B2	H	Mass (Approx. kg) Stainless Cast Steel 10K CL150
15	13	108	54	1/2	40	PO-04DN	212	B/2	B/2	223	6.9
						PO-05DN	268			236	7.8
20	19	117	58.5							240	8.2
						PO-06DN	314			256	9.7
25	25	127	63.5		50					267	11.1
						PO-08DN	392			306	18.2
40	38	165	60		65					308	20.1
50	51	178	65		80					316	22.0
						PO-10DN	500			364	30.7
65	64	190			100					400	39.5
						PO-12DN	634			431	51.5
80	76	203	70		125	PO-10DN	500			410	46.6
						PO-12DN	634			441	58.6
100	102	229	75		150					454	75.5
						PO-13D	869	547	322	500	113.0
125	127	267	80	3/4	200					550	139.0
						PO-18D	1013	634	379	621	199.0
150	152	292	85		250	PO-13D	869	547	322	570	170.0
						PO-18D	1013	634	379	641	230.0
200	203	330	90		350					687	299.0
						PO-22D	1272	778	494	798	397.0

4-1 Pneumatically Operated 2-Way Ball Valve Extended Gland Type: FEXPN(PO, PC)1100NB

Dimension

Valve Type: FEXPN1100NB (Double Acting Extended Gland Type)

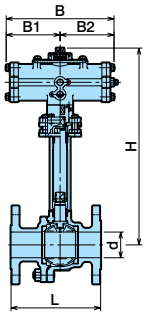

FEXPN1100NB (04DN to 12DN)

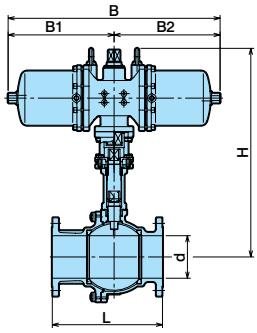

FEXPN1100NB (13D to 18D)

Unit: mm

Nominal size DN	d	L 10K CL150	L 20K CL300	Actuator Code	B	B1	B2	H	Mass (Approx. kg) Stainless Cast Steel 10K CL150	Mass (Approx. kg) Stainless Cast Steel 20K CL300
15	13	108	140	PN-04DN	144	B/2	B/2	325	3.7	4.2
20	19	117	152					329	4.3	4.9
				PN-05DN	172			342	4.7	5.3
25	25	127	165	PN-04DN	144			343	6.0	6.8
				PN-05DN	172			356	6.5	7.3
40	38	165	190					374	10.6	11.7
				PN-06DN	214			390	11.6	12.7
50	51	178	216					398	13.3	15.2
				PN-08DN	266			419	17.3	19.2
65	64	190	241	PN-06DN	214			426	19.8	23.8
				PN-08DN	266			447	22.3	26.3
				PN-10DN	336			495	30.5	34.0
80	76	203	283	PN-08DN	266			457	25.4	32.4
				PN-10DN	336			505	31.1	38.1
100	102	229	305					540	42.0	54.0
				PN-12DN	420			570	52.0	64.0
125	127	356	381	PN-10DN	336			576	59.5	73.3
				PN-12DN	420			609	76.5	90.3
				PN-13D	644			655	95.0	108.8
150	152	394	403	PN-12DN	420			629	91.5	106.3
				PN-13D	644			675	109.0	123.8
				PN-18D	758			746	145.0	159.8

Valve Type: FEXPO1100NB (Single Acting Extended Gland Type)

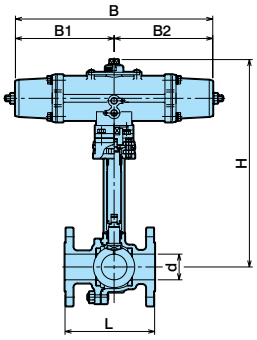

FEXPO1100NB (04DN to 12DN)

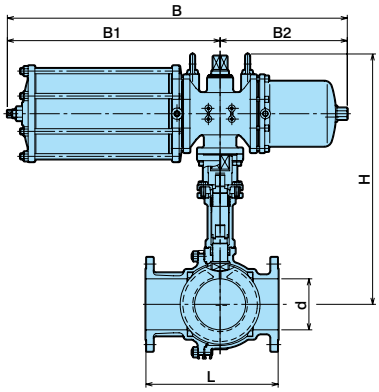

FEXPO1100NB (13D to 18D)

Unit: mm

Nominal size DN	d	L 10K CL150	L 20K CL300	Actuator Code	B	B1	B2	H	Mass (Approx. kg) Stainless Cast Steel 10K CL150	Mass (Approx. kg) Stainless Cast Steel 20K CL300
15	13	108	140	PO-04DN	212	B/2	B/2	325	4.2	4.7
				PO-05DN	268			338	5.1	5.6
20	19	117	152					342	5.9	6.5
				PO-06DN	314			358	7.4	8.0
25	25	127	165					372	9.3	10.1
				PO-08DN	392			411	16.4	17.1
40	38	165	190						17.1	18.2
				PO-10DN	214			459	24.0	25.7
50	51	178	216	PO-08DN	392			419	18.8	20.7
				PO-10DN	500			467	27.8	29.7
65	64	190	241					495	35.5	39.5
				PO-12DN	634			526	47.5	51.5
80	76	203	283	PO-10DN	500			505	38.6	45.6
				PO-12DN	634			536	50.6	57.6
100	102	229	305					570	63.0	74.5
				PO-13D	869	547	322	616	100.0	112.0
125	127	356	381					655	130.0	143.8
				PO-18D	1013	634	379	726	190.0	203.8
150	152	394	403	PO-13D	869	547	322	675	149.0	163.8
				PO-18D	1013	634	379	746	209.0	223.8
				PO-22D	1272	778	494	823	259.0	273.8

4-2 Pneumatically Operated 3-Way Ball Valve

Valve Codes

Valve Code for EPN(PO, PC)1300NB(N)

EPN1307NB-L2-NTF-050-06DN-J10KRF

❶ ❷ ❸ ✻ ❹ ❺ ❻ ❼ ❽

E300NB-L2/T4(L4), E300N-T3(L3) (3-Way Ball Valve)

❶ Operation Type

PN	Double Acting Type
PO	Reverse Acting Type (CCW Action)
PC	Direct Acting Type (CW Action)

❷ 1

Pneumatically Operated Type On-Off Valve

❸ Body Material

04	FCD400	**12**	SCS14A
07	SCS13A	**13**	SCS16A

❹ Seat Mechanism

Code	Port Shape	Seat Number
L2	L-Port	2
L3		3
L4		4
T3	T-Port	3
T4		4

❺ Seat Material (refer to P10)

NTF, NCF, NGR, CFM, CFMR

❻ Nominal Size (DN or A)

Conforming to ISO 6708 and JIS B 2001

❼ Actuator Code (04DN to 12DN, 13D to 25D)

❽ Connection

J10KRF	JIS 10KRF
J20KRF	JIS 20KRF
A150RF	ASME CL150
A300RF	ASME CL300

✻ Improvement Identification Code

None	Original Design
N	First Improvement
NB	Second Improvement
NC	Third Improvement
ND	Fourth Improvement

4-2 Pneumatically Operated 3-Way Ball Valve 2 Seats 3-Way Type: EPN(PO,PC)1300NB-L2

Actuator Selection Table

Valve Type: EPN1300NB-L2-15/200 (Double Acting Type)

Operating Pressure: 0.4MPa

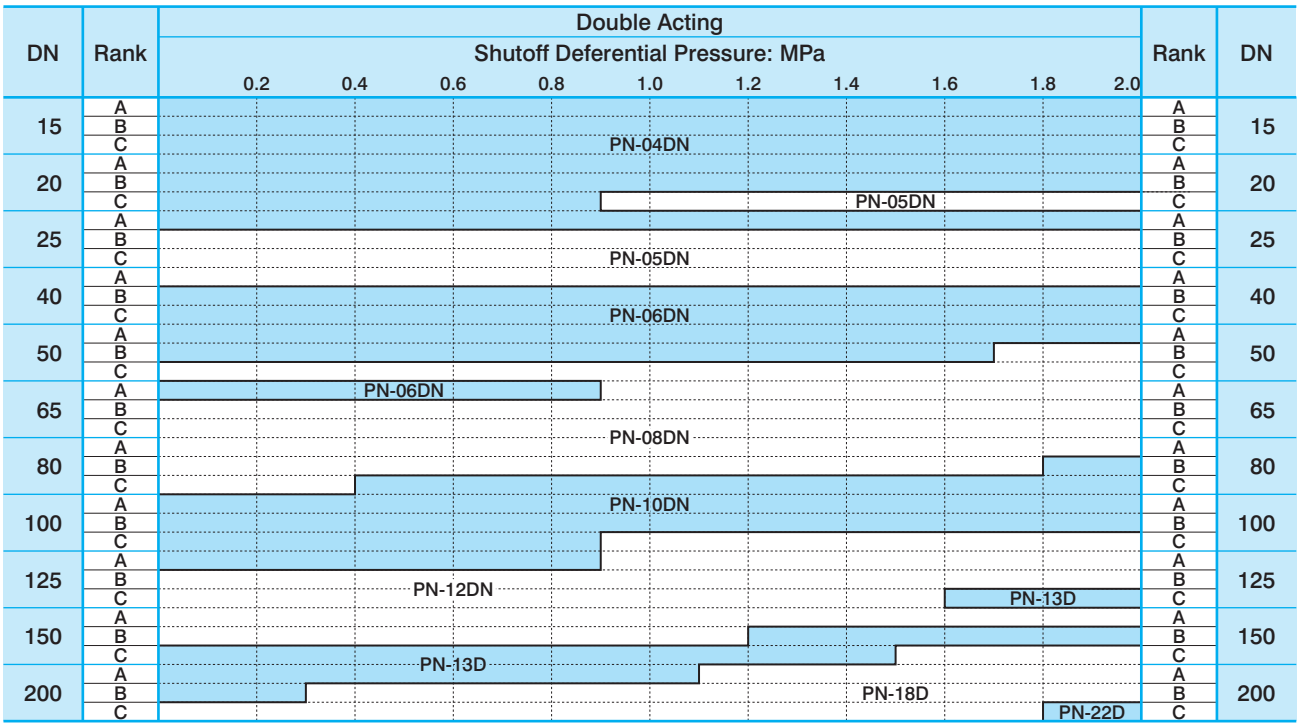

Valve Type: EPO1300NB-L2-15/200 (Single Acting Type)

Operating Pressure: 0.4MPa

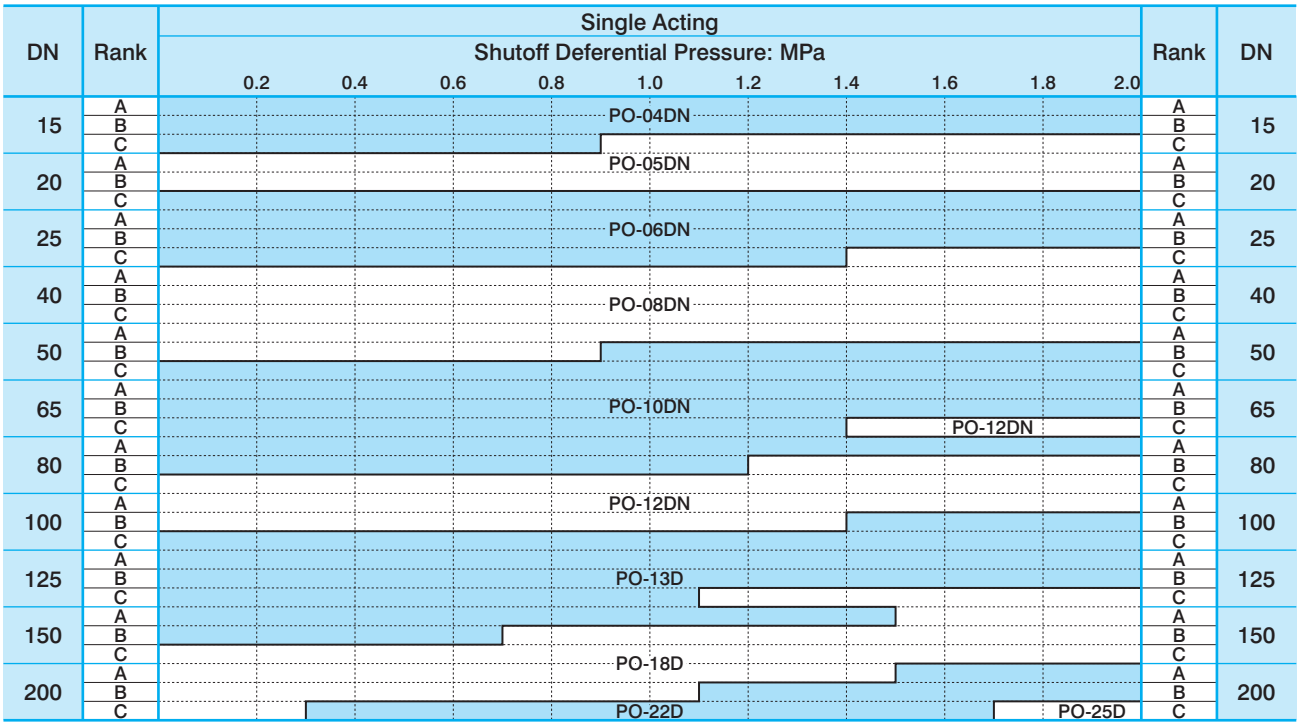

Dimension

Valve Type: EPN1300NB-L2 (Double Acting Type)

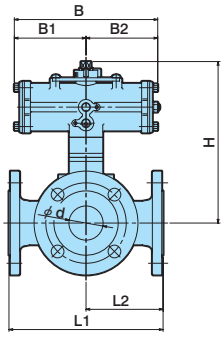

EPN1300NB-L2 (04DN to 12DN)

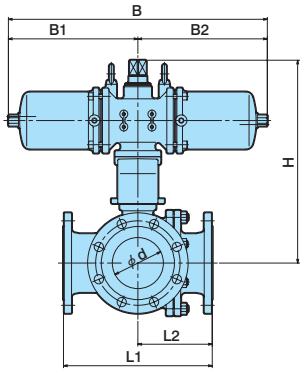

EPN1300NB-L2 (13D to 22D)

Unit: mm

Nominal size DN	d	L1	L2	Actuator Code	B	B1	B2	H	Mass (Approx. kg) Stainless Cast Steel 10K, CL150
15	13	146	73	PN-04DN	144	B/2	B/2	175	4.0
20	19	150	75					179	4.7
				PN-05DN	172			192	5.1
25	25	170	85	PN-04DN	144			193	6.6
				PN-05DN	172			206	7.1
40	38	200	100					224	11.2
				PN-06DN	214			240	12.2
50	51	230	115					248	15.0
				PN-08DN	266			269	19.0
65	64	260	130	PN-06DN	214			276	22.8
				PN-08DN	266			297	25.3
80	76	280	140					307	29.4
				PN-10DN	336			355	35.1
100	102	340	170					390	48.0
				PN-12DN	420			420	58.0
125	127	370	185	PN-10DN	336			426	66.5
				PN-12DN	420			459	83.5
				PN-13D	644			505	100.0
150	152	430	215	PN-12DN	420			479	102.5
				PN-13D	644			525	119.0
				PN-18D	758			596	156.0
200	203	520	260	PN-13D	644			579	185.0
				PN-18D	758			641	222.0
				PN-22D	988			752	302.0

Valve Type: EPO1300NB-L2 (Single Acting Type)

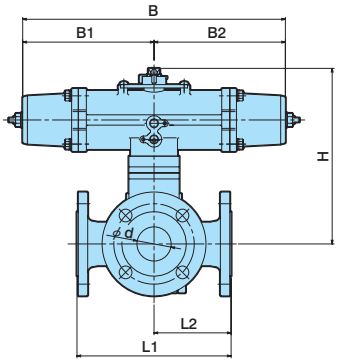

EPO1300NB-L2 (04DN to 12DN)

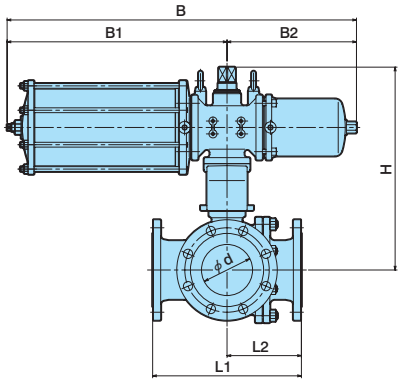

EPO1300NB-L2 (13D to 25D)

Unit: mm

Nominal size DN	d	L1	L2	Actuator Code	B	B1	B2	H	Mass (Approx. kg) Stainless Cast Steel 10K, CL150
15	13	146	73	PO-04DN	212	B/2	B/2	175	4.5
				PO-05DN	268			188	5.4
20	19	150	75					192	6.3
				PO-06DN	314			208	7.8
25	25	170	85					222	9.9
				PO-08DN	392			261	17.0
40	38	200	100						17.7
50	51	230	115					269	20.5
				PO-10DN	500			317	29.2
65	64	260	130					345	38.5
				PO-12DN	634			376	50.5
80	76	280	140	PO-10DN	500			355	42.6
				PO-12DN	634			386	54.6
100	102	340	170					420	68.5
				PO-13D	869	547	322	500	106.0
125	127	370	185					550	132.0
				PO-18D	1013	634	379	621	192.0
150	152	430	215	PO-13D	869	547	322	570	151.0
				PO-18D	1013	634	379	641	211.0
								687	277.0
200	203	520	260	PO-22D	1272	778	494	752	352.0
				PO-25D	1671	1036	635	789	509.0

4-2 Pneumatically Operated 3-Way Ball Valve 4 Seats 3-Way Type: EPN(PO,PC)1300NB-T4/L4 3 Seats 3-Way Type: EPN(PO,PC)1300NB-T3/L3

Actuator Selection Table

Valve Type: EPN1300NB-T4(L4)-15/100, EPN1300N-T3(L3)-125/200 (Double Acting Type)

Operating Pressure: 0.4MPa

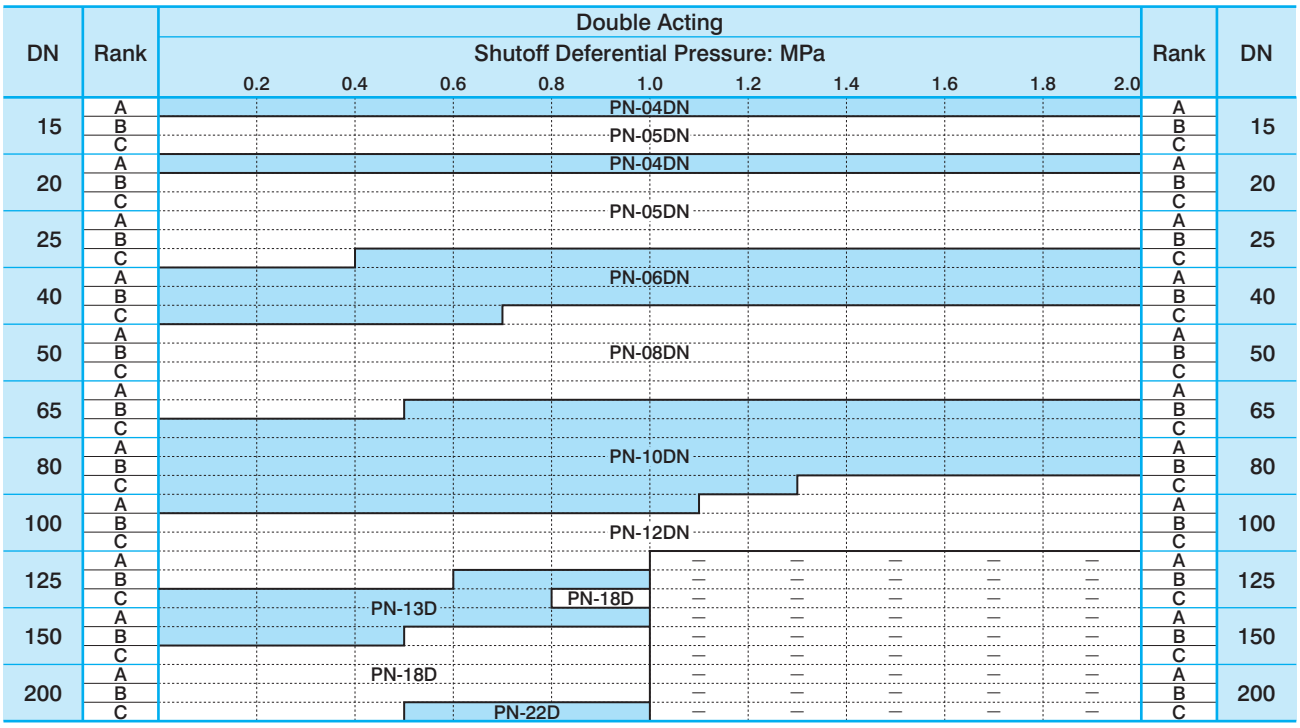

Valve Type: EPO1300NB-T4(L4)-15/100, EPO1300N-T3(L3)-125/200 (Single Acting Type)

Operating Pressure: 0.4MPa

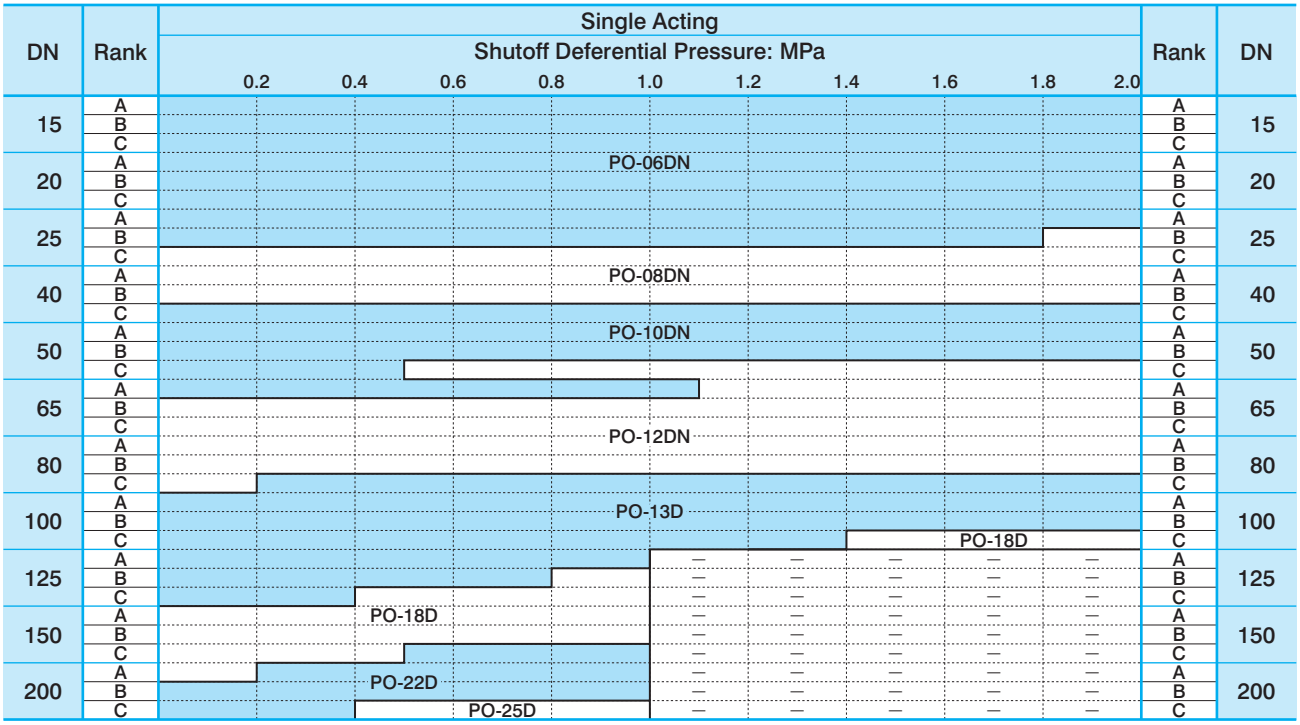

Dimension

Valve Type: EPN1300NB-T4(L4)-15/100, EPN1300N-T3(L3)-125/200 (Double Acting Type)

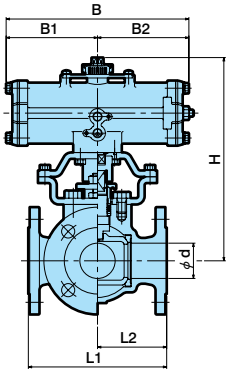

EPN1300NB-T4 (04DN to 12DN)

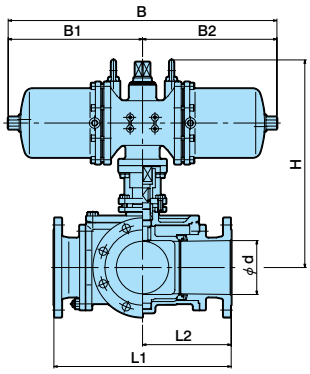

EPN1300N-T3 (13D to 22D)

Unit: mm

Nominal size DN	d	L1 10K CL150	L1 20K	L2 10K CL150	L2 20K	Actuator Code	B	B1	B2	H	Mass (Approx. kg) Stainless Cast Steel 10K CL150	Mass (Approx. kg) Stainless Cast Steel 20K
15	19	140	146	70	73	PN-04DN	144	B/2	B/2	192	4.8	5.4
						PN-05DN	172			205	5.2	5.8
20						PN-04DN	144			192	5.3	
						PN-05DN	172			205	5.7	6.2
25	25	160	166	80	83					217	9.0	9.8
						PN-06DN	214			232	10.0	10.8
40	38	180	186	90	93					246	12.4	14.6
						PN-08DN	266			267	16.4	18.5
50	51	200	230	100	115					292	20.1	21.4
65	64	240	260	120	130					303	26.0	29.5
						PN-10DN	336			352	32.0	35.5
80	76	260	280	130	140					379	40.0	45.0
						PN-12DN	420			412	—	55.0
100	102	330	350	165	175	PN-10DN	336			394	47.0	61.0
						PN-12DN	420			427	57.0	71.0
125	127	430	—	215	—					457	114.0	—
						PN-13D	644			502	119.0	—
						PN-18D	758			574	156.0	—
150	152	500	—	250	—	PN-13D	644			514	146.0	—
						PN-18D	758			586	183.0	—
200	203	650	—	325	—					626	258.0	—
						PN-22D	988			759	325.0	—

Valve Type: EPO1300NB-T4(L4)-15/100, EPO1300N-T3(L3)-125/200 (Single Acting Type)

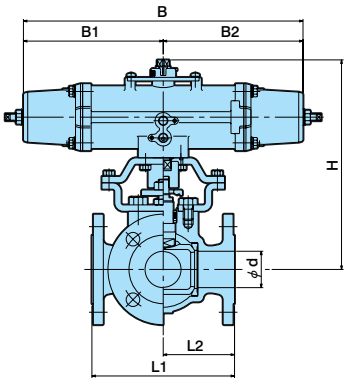

EPO1300NB-T4 (04DN to 12DN)

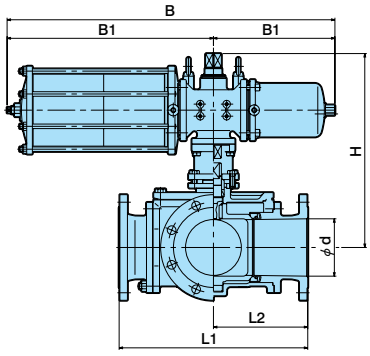

EPO1300N-T3 (13D to 25D)

Unit: mm

Nominal size DN	d	L1 10K CL150	L1 20K	L2 10K CL150	L2 20K	Actuator Code	B	B1	B2	H	Mass (Approx. kg) Stainless Cast Steel 10K CL150	Mass (Approx. kg) Stainless Cast Steel 20K
15	19	140	146	70	73	PO-06DN	314	B/2	B/2	221	8.0	8.6
20											8.5	9.0
25	25	160	166	80	83					232	11.2	12.0
						PO-08DN	392			253	15.5	16.3
40	38	180	186	90	93					267	17.9	20.1
						PO-10DN	500			316	26.5	28.7
50	51	200	230	100	115					341	33.3	34.6
						PO-12DN	634			372	45.3	46.6
65	64	240	260	120	130	PO-10DN	500			352	37.0	—
						PO-12DN	634			383	51.5	55.0
80	76	260	280	130	140					412	60.5	65.5
						PO-13D	869	547	322	455	98.0	103.0
100	102	330	350	165	175					470	105.0	119.0
						PO-18D	1013	634	379	525	—	182.0
125	127	430	—	215	—	PO-13D	869	547	322	502	151.0	—
						PO-18D	1013	634	379	574	211.0	—
150	152	500	—	250	—					586	238.0	—
						PO-22D	1272	778	494	717	298.0	—
200	203	650	—	325	—	PO-18D	1013	634	379	626	313.0	—
						PO-22D	1272	778	494	759	375.0	—
						PO-25D	1671	1036	635	820	400.0	—

4-3 Pneumatically Operated V-Port Valve: VPN(PO,PC)1100ND

Valve Codes

Valve Code for VPN(PO,PC)1100ND

VPN1107ND-CF-050-06DN-J10KRF

❶ ❷ ❸ ✻ ❹ ❺ ❻ ❼

V100ND(NC) (V-Port Valve)

❶ Operation Type

PN	Double Acting Type
PO	Reverse Acting Type (Air to Open)
PC	Direct Acting Type (Air to Close)

❷ 1

Pneumatically Operated Type On-Off Valve

❸ Body Material

07	SCS13A
12	SCS14A

❹ Seat Material

ST	Solid Seat
M	Thin Seat
CF	Soft Seat

❺ Nominal Size (DN or A)

Conforming to ISO 6708 and JIS B 2001

❻ Actuator Type (04DN to 12DN, 13D to 25D)

❼ Connection

J10KRF	JIS 10KRF
J20KRF	JIS 20KRF
A150RF	ASME CL150

✻ Improvement Identification Code

None	Original Design
N	First Improvement
NB	Second Improvement
NC	Third Improvement
ND	Fourth Improvement

Actuator Selection Table

Valve Type: VPN1100ND-25/100, VPN1100NC-125/200 (Double Acting Type)

Operating Pressure: 0.4MPa

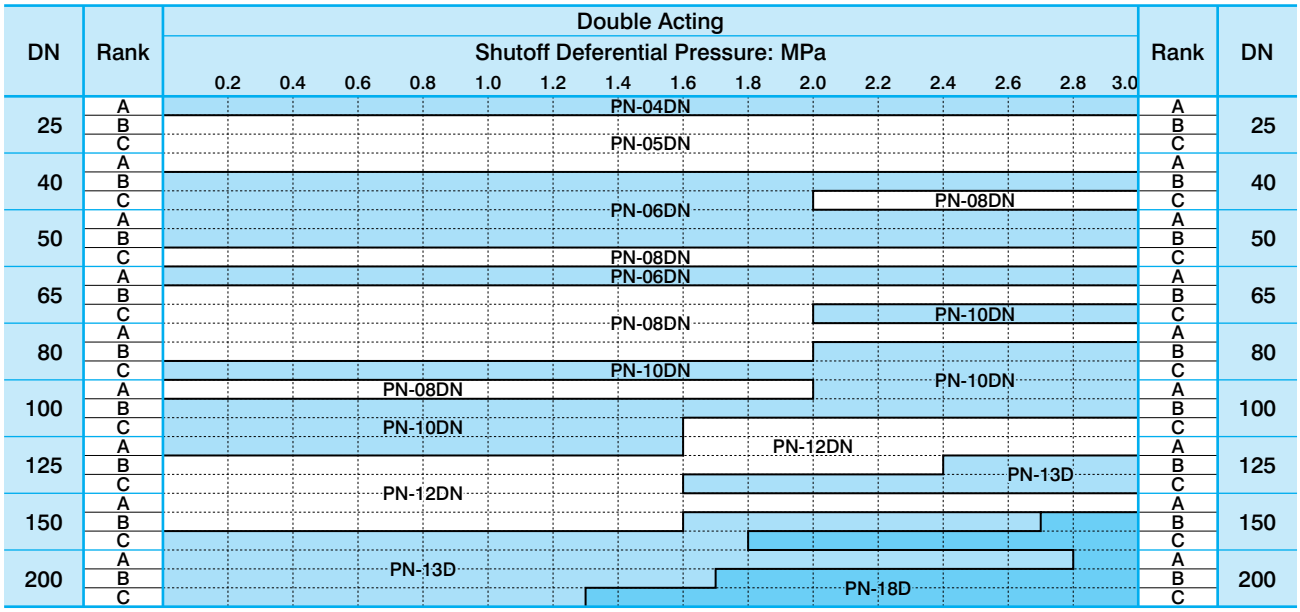

Valve Type: VPO1100ND-25/100, VPO1100NC-125/200 (Single Acting Type)

Operating Pressure: 0.4MPa

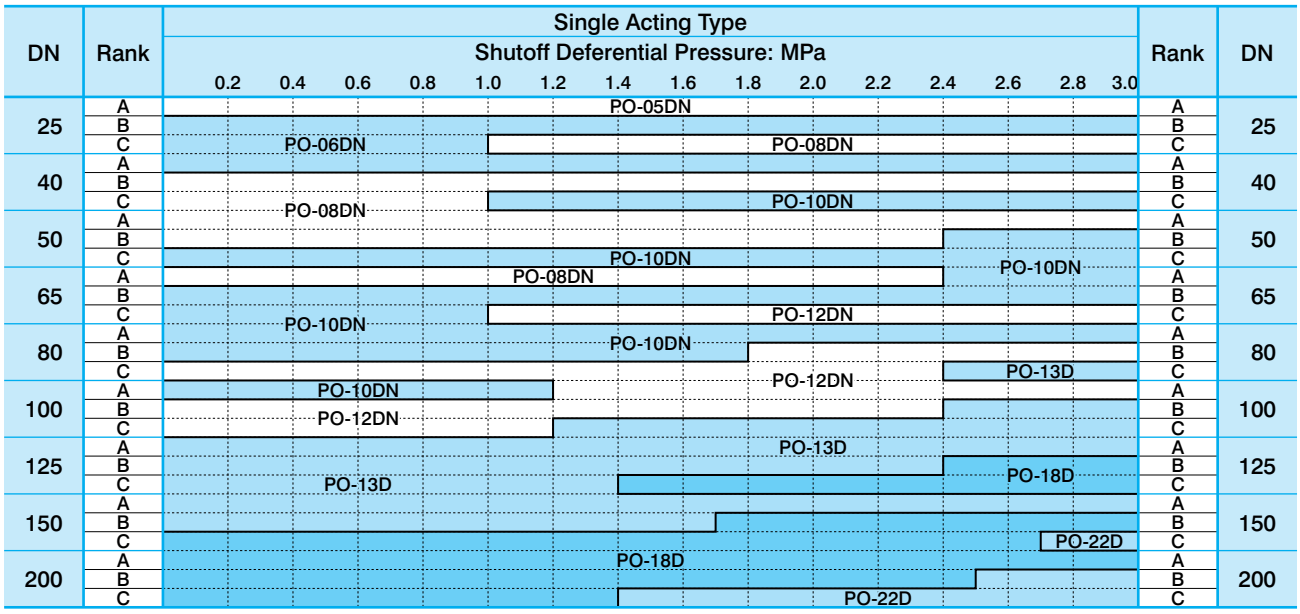

Dimension

Valve Type: VPN1100ND (Double Acting)

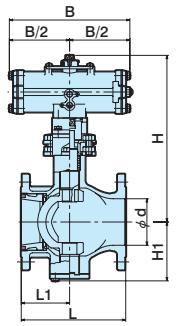

VPN1100ND (NC)
(04DN to 12DN)

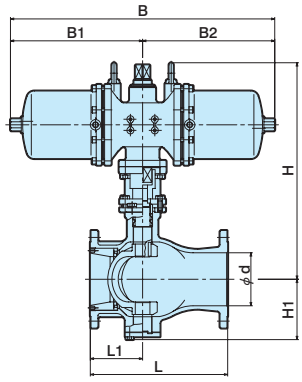

VPN1100NC (13D to 18D)

Unit: mm

Nominal size DN	d	L 10K CL150	L 20K	L1 10K CL150	L1 20K	H1	Actuator Code	B	B1	B2	H	Mass (Approx. kg) Stainless Cast Steel 10K CL150	Mass (Approx. kg) Stainless Cast Steel 20K
25	25	127	165	55		48	PN-04DN	144	B/2	B/2	208	5.3	6.5
							PN-05DN	172			221	6.3	7.5
40	38	165	190	70		71					250	9.3	11.0
							PN-06DN	214			266	10.3	12.0
							PN-08DN	266			287	13.8	15.5
50	51	178	216	75		77	PN-06DN	214			271	11.6	14.0
							PN-08DN	266			292	15.1	17.5
65	64	190	241	80		96	PN-06DN	214			306	17.0	19.5
							PN-08DN	266			327	19.0	21.5
							PN-10DN	336			373	24.5	27.0
80	76	203	283	90		101	PN-08DN	266			332	20.0	23.0
							PN-10DN	336			378	25.5	28.5
100	102	229	305	106		131	PN-08DN	266			372	27.5	33.0
							PN-10DN	336			418	33.0	38.5
							PN-12DN	420			451	41.0	46.5
125	127	356	381	145		163	PN-10DN	336			462	50.5	56.5
							PN-12DN	420			495	67.5	73.5
							PN-13D	644			541	—	90.0
150	152	394	403	150		173	PN-12DN	420			505	78.5	87.5
							PN-13D	644			551	95.0	104.0
							PN-18D	758			622	—	141.0
200	203	457	502	200		211	PN-13D	644			600	128.0	140.0
							PN-18D	758			662	165.0	177.0

Valve Type: VPO1100ND (Single Acting)

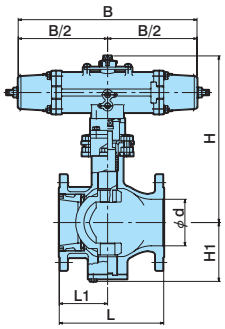

VPO1100ND (NC)
(04DN to 12DN)

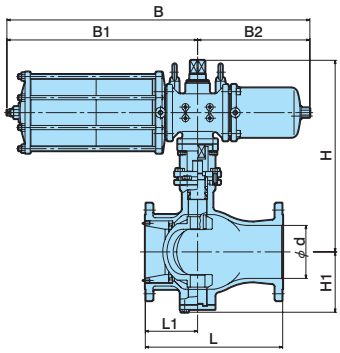

VPO1100NC (13D to 18D)

Unit: mm

Nominal size DN	d	L 10K CL150	L 20K	L1 10K CL150	L1 20K	H1	Actuator Code	B	B1	B2	H	Mass (Approx. kg) Stainless Cast Steel 10K CL150	Mass (Approx. kg) Stainless Cast Steel 20K
25	25	127	165	55		48	PO-05DN	268	B/2	B/2	221	7.3	8.5
							PO-06DN	314			237	8.8	10.0
							PO-08DN	392			258	11.8	13.0
40	38	165	190	70		71	PO-06DN	314			266	12.3	14.0
							PO-08DN	392			287	15.8	17.5
							PO-10DN	500			333	23.8	25.5
50	51	178	216	75		77	PO-08DN	392			292	17.1	19.5
							PO-10DN	500			338	25.1	27.5
65	64	190	241	80		96	PO-08DN	392			327	21.5	24.0
							PO-10DN	500			373	29.5	32.0
							PO-12DN	634			406	42.5	45.0
80	76	203	283	90		101	PO-10DN	500			378	31.0	34.0
							PO-12DN	634			411	44.0	47.0
100	102	229	305	106		131	PO-10DN	500			418	40.0	45.5
							PO-12DN	634			451	53.0	58.5
							PO-13DN	869	547	322	491	91.0	97.0
125	127	356	381	145		163	PO-13D	869			541	116.0	122.0
							PO-18D	1013	634	379	612	—	182.0
150	152	394	403	150		173	PO-13D	869	547	322	551	127.0	136.0
							PO-18D	1013	634	379	622	187.0	196.0
200	203	457	502	200		211						220.0	232.0
							PO-22D	1272	778	494	773	280.0	292.0

4-4 Data for Pneumatically Operated Valve

Air Consumption

Cumulative air volume necessary to operate actuator (1 time = 1 back and forth) can be calculated by the following.

Calculation for Air Consumption

Q = Air Consumption (Nl), **P** = Operating Pressure (MPa)
A, B, C = Air Chamber Volume (l), **N** = Operation Number (1 time=1 back and forth)

Actuator Code 04D to 12D	Actuator Code 13D to 25D
Double Acting Type $Q=\{(10P+1)\times(A+B)\}\times N$ **Single Acting Type** $Q=(10P+1)B\times N$	**Double Acting Type** $Q=[(10P+1)\times\{(A+B)\times 2\}]\times N$ **Single Acting Type** $Q=\{(10P+1)\times(A+C)\}\times N$

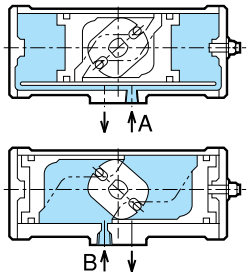

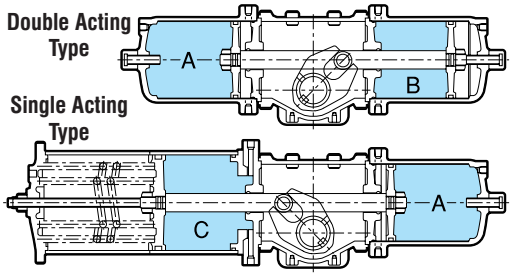

Air Chamber Volume (l)

Actuator Code	A	B	C
04DN	0.08	0.1	—
05DN	0.15	0.2	—
06DN	0.3	0.4	—
08DN	0.6	0.8	—
10DN	1.1	1.5	—
12DN	2.2	3.0	—
13D	1.83	1.56	3.13
18D	3.86	3.39	5.67
22D	7.88	6.88	6.88
25D	14.0	11.6	11.6

Output Torque

Output Torque Value (Operating Pressure 0.4 MPa)

Unit: N·m

Actuator Code	PN- (Double Acting) 0° or 90°
04DN	17.7
05DN	35.3
06DN	70.6
08DN	142
10DN	284
12DN	569
13D	785
18D	1670
22D	3480
25D	5990

Unit: N·m

Actuator Code	PO-(C) (Single Acting)			
	Output by Air		Output by Spring	
	0°	90°	0°	90°
04DN	11.8	5.8	5.9	11.8
05DN	23.5	11.8	11.8	23.5
06DN	47.1	23.5	23.5	47.1
08DN	94.1	49	48.1	93.2
10DN	186	96.1	98.1	186
12DN	376	191	191	378
13D	716	425	410	701
18D	1370	809	785	1340
22D	2200	1260	1290	2230
25D	3740	2150	2250	3840

Output Characteristic Curve (Operating Pressure 0.4 MPa)

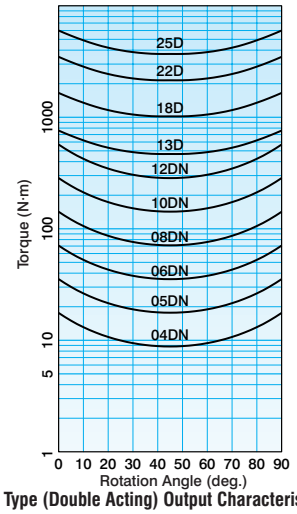

PN Type (Double Acting) Output Characteristic Curve

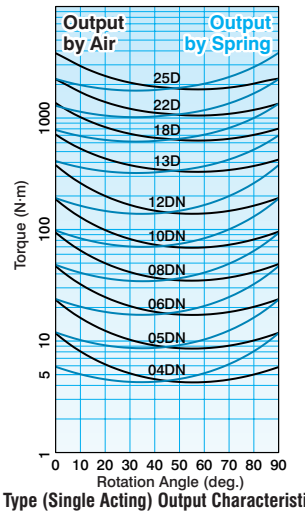

PO Type (Single Acting) Output Characteristic Curve

Ancillary Equipment

Installation of Ancillaries

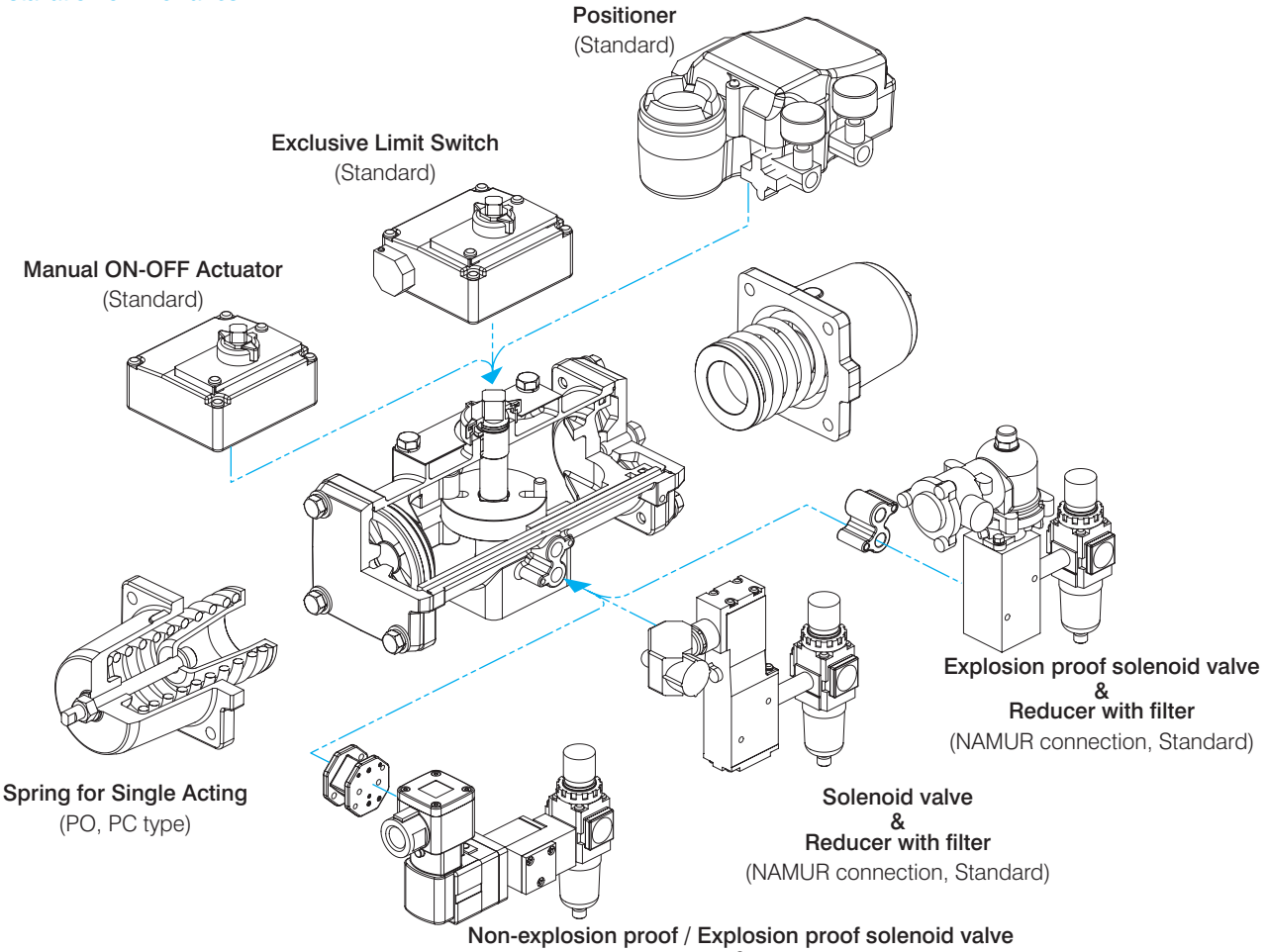

Example of solenoid valve installation

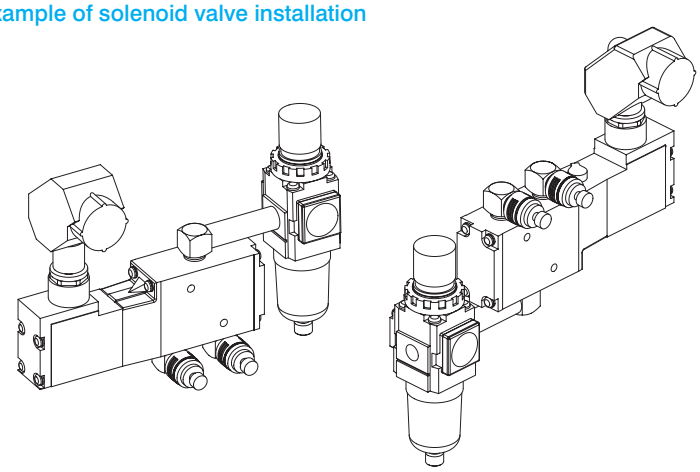

Rotate 90° solenoid valve and install reducer by corner elbow and nipple.
Speed controller is installed at air outlet of solenoid valve by corner elbow.

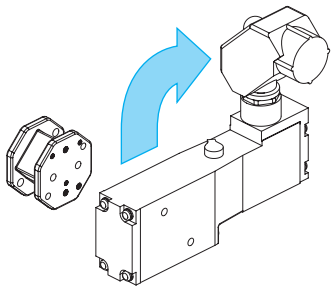

Possible to install exclusive spacer first and connect rotating solenoid valve by 90°.
In this case, corner elbow is screwed at upper or lower side of solenoid valve and reducer is installed by nipple directly.

Installation of NAMUR standard connection

Solenoid Valve

By application of NAMUR Standard, any NAMUR standard solenoid valves are connectable without special bracket.

Reducer with filter

- To install upright position by NAMUR solenoid valve: Directly install to the solenoid valve by nipple.
- To install in 90° rotation by NAMUR solenoid valve: Screw a corner elbow to upper or lower side of the solenoid valve and directly install by nipple.
- Other cases: Install by bracket. (Connect to solenoid valve by copper pipe.)

Ancillary Equipment (continues form the previous page)

Solenoid Valve

Protection Type	Drip-proof	Explosion Proof	Drip-proof	Rainproof	Explosion proof
Actuator Code	04DN to 12DN		13D, 18D, 22D, 25D		
Code	EV20	EV30	4F310-08, 10	4F310-08, 10-B	4F310E-08, 10
Manufacturer	SMC		CKD		
Rated Voltage	AC100/110V · 50/60Hz, 200/220V · 50/60Hz				
Bore Size	Rc1/4		13D: Rc1/4 · 18D to 25D: Rc3/8		
Effective Sectional Area	—		13D: 13.5mm² · 18D to 25D: 32mm²		

Reducer with filter

Actuator Code	04DN to 12DN, 13D		18D, 22D, 25D	
Manufacturer Code	AW20-02EH-CR-X2127	AW20-02EH-2R-X2126	AW30-03EH-R-X2159	AW30-03EH-2R-X2160
Bore Size	Rc1/4		Rc3/8	
Pressure Range	0.05 to 0.85MPa			
Filtration Accuracy	5μm			
Filter Case Material	PC with guard	Aluminum (ADC12)	PC with guard	Aluminum (ADC12)
Manufacturer	SMC			
Note	When positioner is used, reducer of XR108-S/M0R1 (for NE22) or XR108-S/M0J3 (for NPN22) manufactured by SSS is applicable.			

Limit Switch

Protection Type		Rainproof (built-in BOX)			Explosion Proof	Rainproof	Explosion Proof
Actuator Code		04DN · 05DN	06DN · 08DN	10DN · 12DN	04DN to 12DN	13D, 18D, 22D, 25D	
NDV Code		LS1A	LS1B	LS20	—	—	—
Manufacturer Code		V-5114E			1LX7001-J	1LS19-J	1LX7001-J
Electrical Rating	AC	16A-125, 250V			5A-250V	10A-125, 250, 480V	5A-250V
	DC	0.6A-115V 0.3A-230V			0.8A-125V 0.4A-250V	0.4A-125V 0.2A-250V	0.8A-125V 0.4A-250V
Manufacturer		Azbil					

Positioner

Input–Output	Pneumatical–Pneumatical	Electrical–Pneumatical (Explosion proof)
NDV Code	NPN22	NE22
Bore Size	Rc1/4	
Supply Pressure	0.4 to 0.7MPa	
Signal	20 to 100kPa	4 to 20mA DC
Linearity	Within ± 1.5%F.S	
Hysteresis	Within1%F.S	
Air Consumption	15Nl/min Supply pessure 0.4MPa	13Nl/min Supply pessure 0.4MPa
Note	Standard for actuator code 04DN, 05DN, 06DN is with speed controller.	

Manual ON-OFF Actuator

NDV Code	MT1	MT2
Actuator Code	04DN to 08DN	10DN to 12DN
Handwheel Rotation	Approx. 43	Approx. 45

Speed Controller

Actuator Code	04DN to 12DN	04DN to 12DN, 13D		18D, 22D, 25D
Manufacturer Code	ASN2-01	AS2200-02	AS2000-02	AS4000-03
Working Pressure Range	0 to 0.99MPa	0.1 to 0.7MPa	0.05 to 0.99MPa	0.05 to 0.99MPa
Bore Size	Rc1/4			Rc3/8
Manufacturer	SMC			
Note	Install directly to solenoid valve (EV20 to EV30). Exhausts throttle type.	Applicable to solenoid valve of non direct installation type and with positioner type. Exhausts throttle type. Install directly to actuator.	Applicable to solenoid valve other than mentioned in the left column or for the case inlet throttle is required.	—

Please contact NDV if you have any questions.

Memo

5

Electrically Operated Valve

Models and Features of Electrically Operated Valve

- SRH Type
- SRJ Type
- SHA Type, SD# Type
- PMK Type

5-1. Electrically Operated 2-Way Ball Valve

- Fire Safe Ball Valve: F□4100NB

5-2. Electrically Operated 3-Way Ball Valve

- 2 Seats 3-Way Ball Valve: E□4300NB-L2
- 4 Seats 3-Way Ball Valve: E□4300NB-T4/L4
- 3 Seats 3-Way Ball Valve: E□4300N-T3/L3

5-3. Electrically Operated V-Port Valve: V□4100ND(NC)

Models and Features of Electrically Operated Valve

Applicable Models

Manufacturer	Type	Nominal Size			
		F100NB	E300NB-L2/T4/L4	E300N-T3/L3	V100ND (NC)
Seibu Electric & Machinery	SRH	DN 15 to 150	DN 15 to 150	DN125 to 150	DN 25 to 200
	SRJ	DN 15 to 200	DN 15 to 200	DN125 to 150	DN 25 to 200
	SHA, SD#	DN125 to 200	DN125 to 200	DN125 to 200	—
Kawaden	PMK	DN 15 to 200	DN 15 to 200	DN125 to 200	DN 25 to 200

The products other than above are also available upon request.

SRH Type (Seibu Electric and Machinery made)

Features

- Compact and lightweight actuator using aluminum alloy and engineering plastic.
- Applicable to single-phase AC power.
- No built-in torque switch.
- Motor is protected by built-in thermal protector.
- Manual operation can be done by a spanner.(Interlock switch is not built in.)
- Usable as regulating valve if a seitroller (electrical positioner) is installed.

Installed Image

Specification

SRH Torque Actuator

Type		SRH-007	SRH-020	SRH-060
Maximum Output Torque *N · m*		70	200	600
Open/Close Time (50/60Hz) *sec./90°*		12/10	12/10	18/15
Power Supply (50/60Hz) *V*		Single-phase 100/110, 200/220		
Motor	Output *W*	10	40	100
	Thermal Class	Class E		
	Thermal Protector	Incorporated		
Torque Limit Switch		Not incorporated		
Space Heater *W*		5		
Microswitch Contact Capacity		AC250V-5A, DC125V-0.4A (Inductive load)		
Lead Inlet		2-G1/2		
Ambient Temperature		-10°C to 50°C		
Protection Structure		IP55/JPW55 (Outdoor waterproof)		
Terminal		Screw size M3.5 × 12P		
Manual Operation		Manually operable using spanner		

Option: Potentiometer, Seimitter, Seitroller

Connecting Diagram

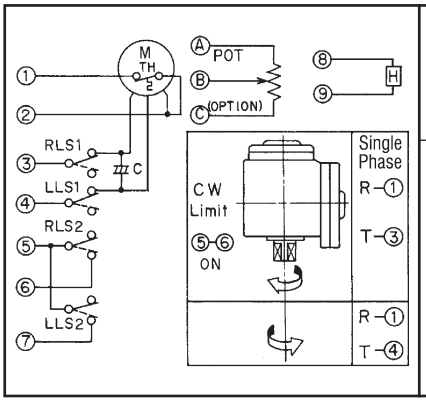

Rotating Direction

① and ③ Clockwise rotation
① and ④ Counterclockwise rotation
Rotating direction is to see valve from the actuator.

Abbreviation

RLS1: Clockwise rotation limit switch (Close)
RLS2: Clockwise rotation limit switch (Close)
LLS1: Counterclockwise rotation limit switch (Open)
LLS2: Counterclockwise rotation limit switch (Open)
M: Motor **TH:** Thermal protector
H: Space heater **C:** Capacitor
POT: Potentiometer (Option)

SRJ Type (Seibu Electric and Machinery made)

Features

- Compact and lightweight actuator using aluminum alloy. Protection structure is IP68 (Submersible).
- Accommodate either single phase or three phase AC power. (Single phase three wire is not applicable to SRJ1 and 2.)
- Motor is protected by built-in torque switch and thermal protector. Damage by excessive valve torque is also prevented by the torque switch.
- Valve can be operated manually by handwheel and be automatically recovered after power input.
- Explosion proof type (conforming to Ex d II BT4/IEC) is also available.
- Usable as regulating valve if seitroller (electrical positioner) is installed.(Seitroller includes Seimitter function.)

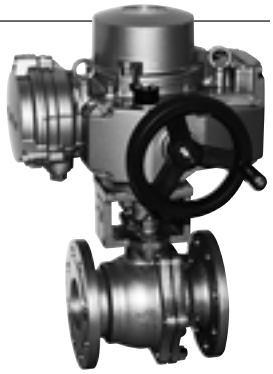

Installed Image

Specification

SRJ Torque Actuator

Type		SRJ-010-7	SRJ-010	SRJ-020	SRJ-060	SRJ-1	SRJ-2
Maximum Output Torque *N · m*		70	125	250	600	1000	2000
Open/Close Time (50/60Hz) *sec./90°*		18/15					36/30
Power Supply (50/60Hz) *V*		Single-phase 100/110, 200/220 • 3-phase 200/220, 400/440				✻	
Motor	Output *W*	40			100	200	
	Thermal Class	Class B					
	Brake	Permanent brake included					
	Thermal Protector	Incorporated					
Torque Limit Switch		Incorporated					
Space Heater *W*		5 to 8					
Microswitch Contact Capacity		AC250V-2A, DC125V-0.4A (Inductive load)					
Lead Inlet		3-G1					
Ambient Temperature		-10°C to 50°C					
Protection Structure		IP68 (Submersible)					
Terminal		Screw size M4×32P, Motor M4×3P					
Manual Operation		With handwheel Automatically recoverable					

Option: Explosion proof (Ex d II BT4), Potentiometer, Seimitter, Seitroller

✻: Inapplicable to single phase three wire

Connecting Diagram

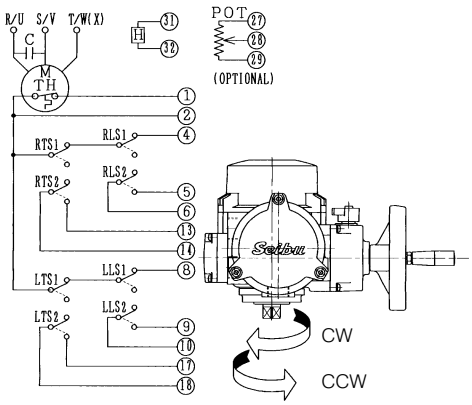

Rotating Direction

Single-phase: **R-U, T-X** | 3-phase: **R-W, S-V, T-U** Clockwise rotation
Single-phase: **R-V, T-X** | 3-phase: **R-U, S-V, T-W** Counterclockwise rotation
Rotating direction is to see valve from the actuator.

Abbreviation

RLS1, RLS2: Clockwise rotation limit switch
LLS1, LLS2: Counterclockwise rotation limit switch
RTS1, RTS2: Clockwise rotation torque switch
LTS1, LTS2: Counterclockwise rotation torque switch
M: Motor **TH:** Thermal protector
H: Space heater **C:** Capacitor
POT: Potentiometer (Option)

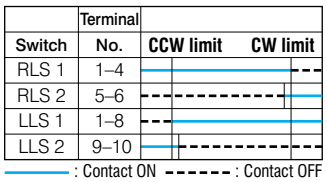

13–14: Overtorque at clockwise limit: ON
1–4: Overtorque at clockwise limit: OFF
17–18: Overtorque at counterclockwise limit: ON
1–8: Overtorque at counterclockwise limit: OFF
31–32: Heater power source terminal
27, 28, 29: Potentiometer terminal

SHA Type and SD# Type (Seibu Electric and Machinery made)

Installed Image

Features

- Robust actuator with ductile cast iron primary and secondary gear.
- Applicable to 3-phase AC power.
- Motor is protected by built-in torque switch. Damage by excessive valve torque is also prevented by the torque switch. In order to protect motor completely, use of thermal relay at panel is advisable.
- Local control priority and Central control priority are available for manual/automatic changeover.
- Interlock switch is incorporated for local control priority.
- Many other options such as single phase motor, DC motor, regulating valve specification are available.

Specification

SHA and SD# Torque Actuator

Type		SHA-01	SHA-02	SHA-04	SDB-075	SDE-15	SDG-22
Maximum Output Torque *N · m*		Settle according to the specification					
Open/Close Time (50/60Hz) *sec./90°*		35/29	35/29	35/29	35/30	35/30	35/30
Power Supply (50/60Hz) *V*		3-phase 200/220, 400/440					
Motor	Output *W*	0.1	0.2	0.4	0.75	1.5	2.2
	Thermal Class	Class B					
	Brake	Not incorporated					
Torque Limit Switch		Incorporated					
Space Heater *W*		10			30		
Microswitch Contact Capacity		AC250V-5A, DC125V-0.5A (Inductive load)					
Lead Inlet		2-G1, 1-G3/4 (for motor)					
Ambient Temperature		-25°C to 50°C					
Protection Structure		IP55/JPW55 (Outdoor waterproof)					
Terminal		Screw size M4×24P, Motor M4×3P			Screw size M4×24P		
Manual Operation		With manual/electrical changeover lever					

Option: Potentiometer, Seimitter, Motor with brake, Thermal motor

Connecting Diagram

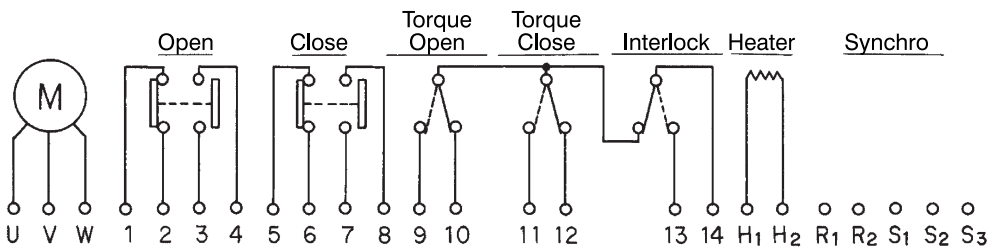

1–2: OFF at Full Open
4–3: ON at Full Open
5–6: OFF at Full Close
8–7: ON at Full Close
9–14: ON at Overtorque in Open Direction
10–14: OFF at Overtorque in Open Direction or by Manual

11–14: ON at Overtorque in Close Direction
12–14: OFF at Overtorque in Close Direction
13–14: ON by Manual
H1, H2: Heater Terminal
Power to be supplied from circuit
U, V, W: Motor Terminal

Interlock line to be assembled that the motor will not be activated manually

PMK Type (Kawaden made)

Features

- Compact and lightweight actuator using aluminum alloy.
- Applicable to single phase AC power
- Torque switch is not incorporated.
- Motor is protected by built-in thermal protector.

Installed Image

Specification

PMK Torque Actuator

Type		PMK-300YS	PMK-600YS	PMK-600YSP	PMK-010SS	PMK-030SS	PMK-060SS	PMK-080SS
Maximum Output Torque *N · m*		29.4	58.8	68.6	147.1	313.8	588.4	784.5
Open/Close Time (50/60Hz) *sec./90°*		8.5/7	8.5/7	12/10	24.5/20	38.5/31.5	57/47	71.5/58.5
Power Supply (50/60Hz) *V*		Single Phase 100/110, 200/220						
Motor	Output *W*	20W	25W				40W	
	Thermal Class	Class E	Class B	Class E	Class B			
	Brake	Not incorporated						
Torque Limit Switch		Not incorporated						
Space Heater *W*		10						
Lead Inlet		1-G1/2			2-G3/4			
Ambient Temperature		-10°C to 50°C						
Protection Structure		IP54 (rainproof)						
Terminal		Screw Size M3 × 8P						
Manual Operation		Actuator bottom axis can be manipulated						

Options: Potentiometer, Intermediate switch, Space heater, Limit switch, Torque Limiter

Connection Diagram

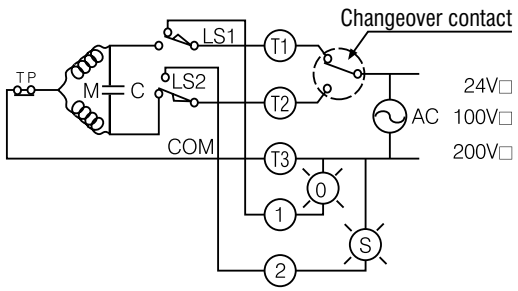

Inside Actuator | Outside Actuator

T1–T3: Rotate counterclockwise when power-in and stop at full open.
T2–T3: Rotate clockwise when power-in and stop at full close.
Open signal on at setting stop position of **LS1.**
Close signal on at setting stop position of **LS2.**
M: Motor
C: Capacitor
TP: Thermal protector

5-1 Electrically Operated 2-Way Ball Valve Fire Safe Type: F94100NB

Valve Codes

Valve Code for F□4100NB

FSR4107NB-NTF-050-( )-J10KRF

❶ ❷ ❸ ✻ ❹ ❺ ❻ ❼

F100NB (Fire Safe Ball Valve)

❶ **Actuator** (Electrically Operated Valve)

SR	SRH Type	Seibu Electric and Machinery
MSJ	SRJ Type	
SH	SHA, SD# Type	
PMK	PMK Type	Kawaden

❷ **4**

Electrically Operated Valve

❸ **Body Material**

04	FCD400
07	SCS13A
12	SCS14A
13	SCS16A

❹ **Seat Material (refer to P10)**

NTF, NCF, NGR, CFM, CFMR

❺ **Nominal Size (DN or A)**

Conforming to ISO 6708 and JIS B 2001

❻ **Actuator Code**

According to the required actuator specification, 8 numbers code will be applied.

❼ **Connection**

J10KRF	JIS 10KRF
J20KRF	JIS 20KRF
A150RF	ASME CL150
A300RF	ASME CL300

✻ **Improvement Identification Code**

None	Original Design
N	First Improvement
NB	Second Improvement
NC	Third Improvement
ND	Fourth Improvement

FSR4100NB (SRH Type Actuator)

Actuator Selection Table

Refer to P37 for selecting rank according to operating condition.

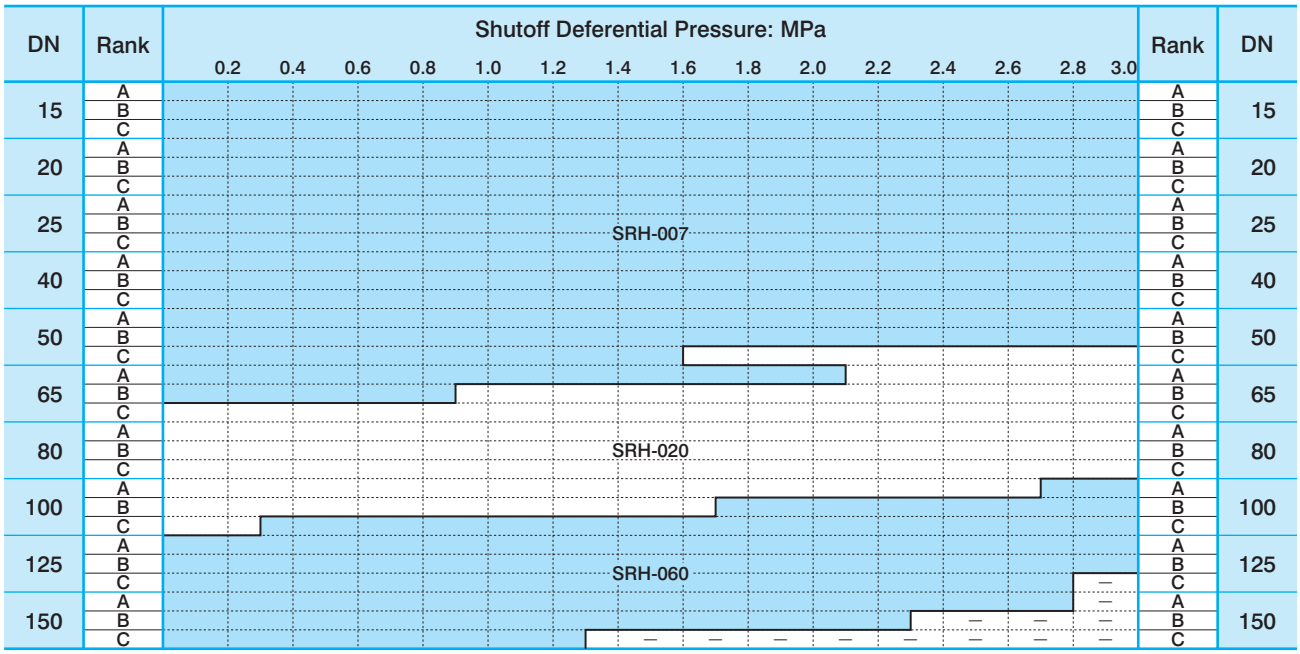

Dimension

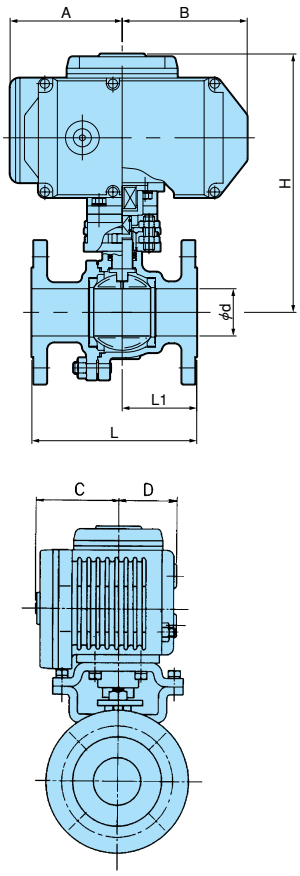

Unit: mm

Nominal size DN	Actuator Code	A	B	C	D	d	10K CL150 L	10K CL150 L1	20K CL300 L	20K CL300 L1	H	Mass (Approx. kg) Stainless Cast Steel 10K CL150	Mass (Approx. kg) Stainless Cast Steel 20K CL300
15	SRH-007	100	108	75	60	13	108	45	140	63	213	7.3	7.7
20	SRH-007	100	108	75	60	19	117	50	152	70	217	8.5	9.0
25	SRH-007	100	108	75	60	25	127	51	165	71	233	9.7	10.4
40	SRH-007	100	108	75	60	38	165	70.5	190	76.5	251	12.9	13.7
50	SRH-007	100	108	75	60	51	178	80.5	216	86	259	16.6	18.2
50	SRH-020	121	135	90	63	51	178	80.5	216	86	279	19.1	20.7
65	SRH-007	100	108	75	60	64	190	87	241	103	287	22.5	26.0
65	SRH-020	121	135	90	63	64	190	87	241	103	307	26.5	30.0
80	SRH-020	121	135	90	63	76	203	97	283	124	317	30.0	36.5
100	SRH-020	121	135	90	63	102	229	116	305	135	351	42.0	53.5
100	SRH-060	158	164	133	85	102	229	116	305	135	375	47.0	58.5
125	SRH-060	158	164	133	85	127	356	148	381	158	413	68.0	81.0
150	SRH-060	158	164	133	85	152	394	173	403	178	433	85.0	99.0

Please contact NDV or local representative if specific installing direction for actuator is required.

FMSJ4100NB (SRJ Type Actuator)

Actuator Selection Table

Refer to P37 for selecting rank according to operating condition.

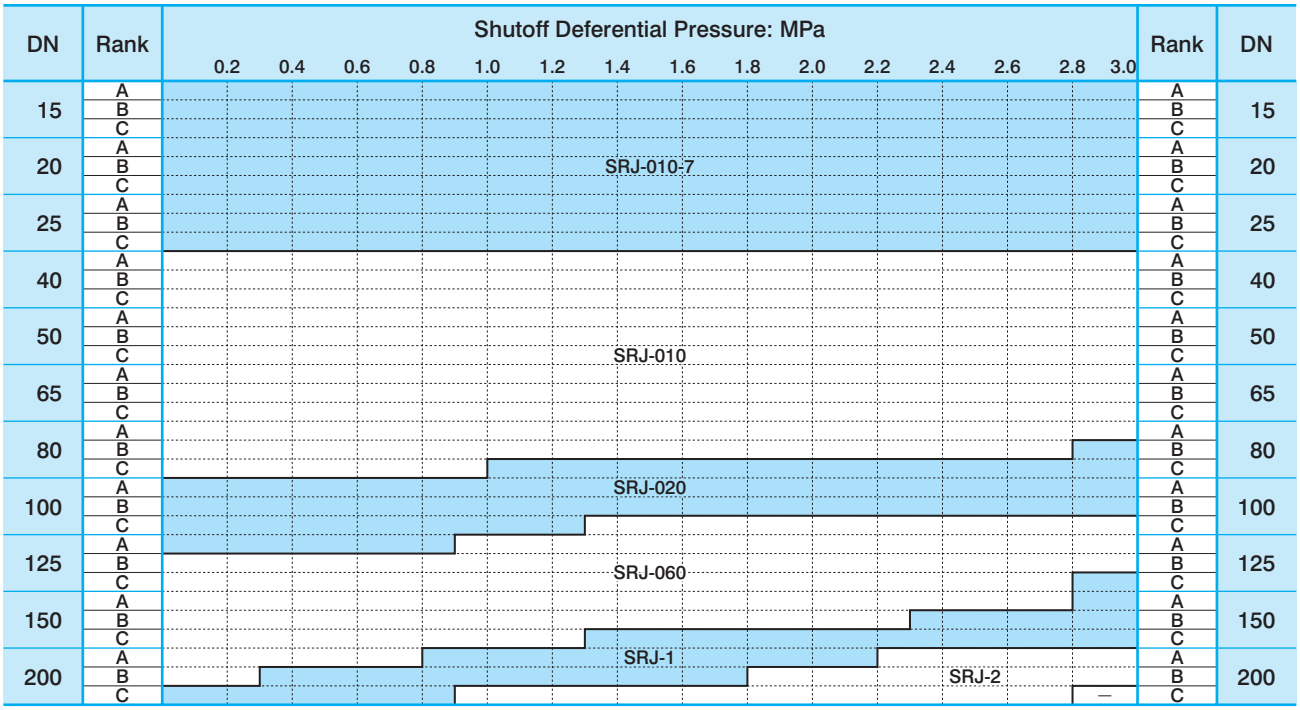

Dimension

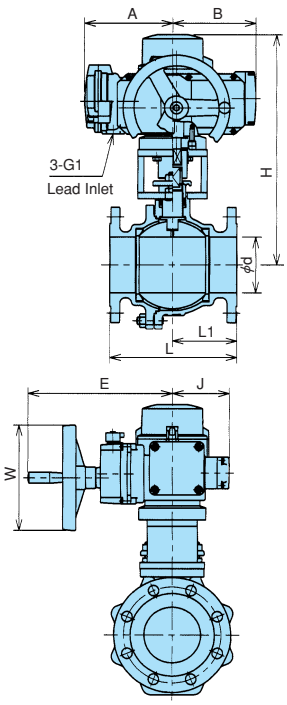

Unit: mm

Nominal size DN	Actuator Code	A	B	E	J	W	d	10K CL150 L	10K CL150 L1	20K CL300 L	20K CL300 L1	H	Mass (Approx. kg) Stainless Cast Steel 10K CL150	Mass (Approx. kg) Stainless Cast Steel 20K CL300
15	SRJ-010-7	186	167	272	104	160	13	108	45	140	63	328	18.3	18.7
20							19	117	50	152	70	332	19.0	19.5
25							25	127	51	165	71	345	20.7	21.4
40	SRJ-010						38	165	70.5	190	76.5	363	23.7	24.5
50							51	178	80.5	216	86	371	25.6	27.2
65							64	190	87	241	103	412	32.0	35.5
80							76	203	97	283	124	422	35.5	42.0
	SRJ-020												50.5	62.0
100							102	229	116	305	135			
	SRJ-060	202	191	316	130	245						453	55.5	67.0
125	SRJ-020	186	167	272	104	160	127	356	148	381	158	513	76.0	—
	SRJ-060	202	191	316	130	245						530	81.0	94.0
	SRJ-1	240	267	354	191							600	107.0	120.0
150	SRJ-060	202	191	316	130		152	394	173	403	178	550	101.0	115.0
	SRJ-1	240	267	354	191							620	126.0	140.0
200	SRJ-060	202	191	316	130		203	457	207	502	235	606	134.8	—
	SRJ-1	240	267	354	191							669	155.0	180.0
	SRJ-2													

Please contact NDV or local representative if specific installing direction for actuator is required.

FSH4100NB, FSD4100NB (SHA and SDB Type Actuator)

Actuator Selection Table

Refer to P37 for selecting rank according to operating condition.

DN	Rank	Shutoff Deferential Pressure: MPa (0.2 0.4 0.6 0.8 1.0 1.2 1.4 1.6 1.8 2.0 2.2 2.4 2.6 2.8 3.0)	Rank	DN
125	A	— —	A	125
	B		B	
	C		C	
150	A	SHA-02 — —	A	150
	B		B	
	C		C	
200	A		A	200
	B	SHA-04	B	
	C	SDB-075	C	

Dimension

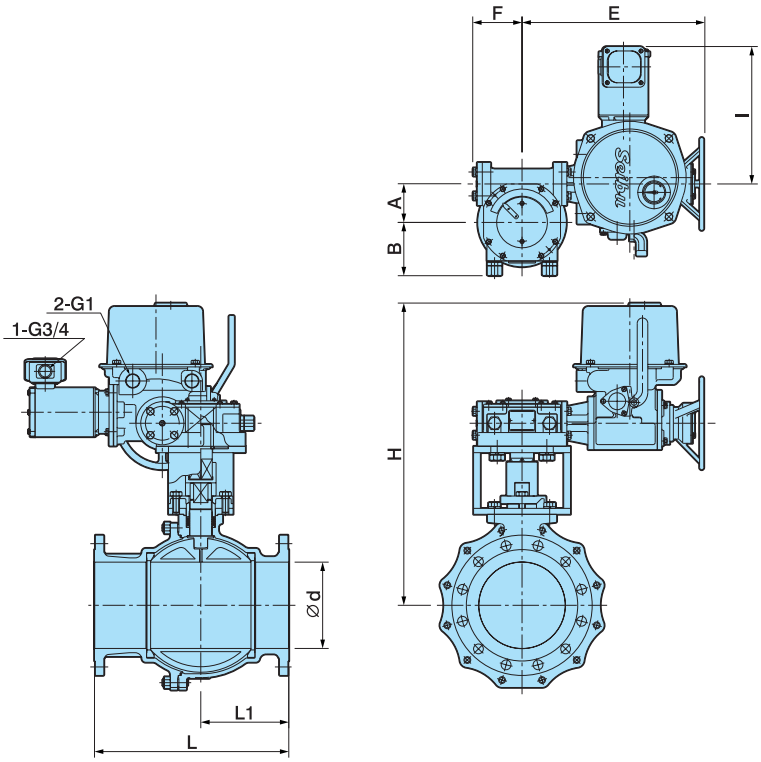

Unit: mm

Nominal size DN	Actuator Code	A	B	E	F	I	d	10K CL150 L	10K CL150 L1	20K CL300 L	20K CL300 L1	H	Mass (Approx. kg) Stainless Cast Steel 10K CL150	Mass (Approx. kg) Stainless Cast Steel 20K CL300
125	SHA-02	91	126	430	116	325	127	356	148	381	158	647	121.0	134.0
150	SHA-02						152	394	173	403	178	667	138.0	152.0
	SHA-04					318								
200	SHA-02					325	203	457	207	502	235	715	172.0	197.0
	SHA-04					318								
	SDB-075	117	152	544	144	375						734	217.0	242.0

Please contact NDV or local representative if specific installing direction for actuator is required.

FPMK4100NB (PMK Type Actuator)

Actuator Selection Table

Refer to P37 for selecting rank according to operating condition.

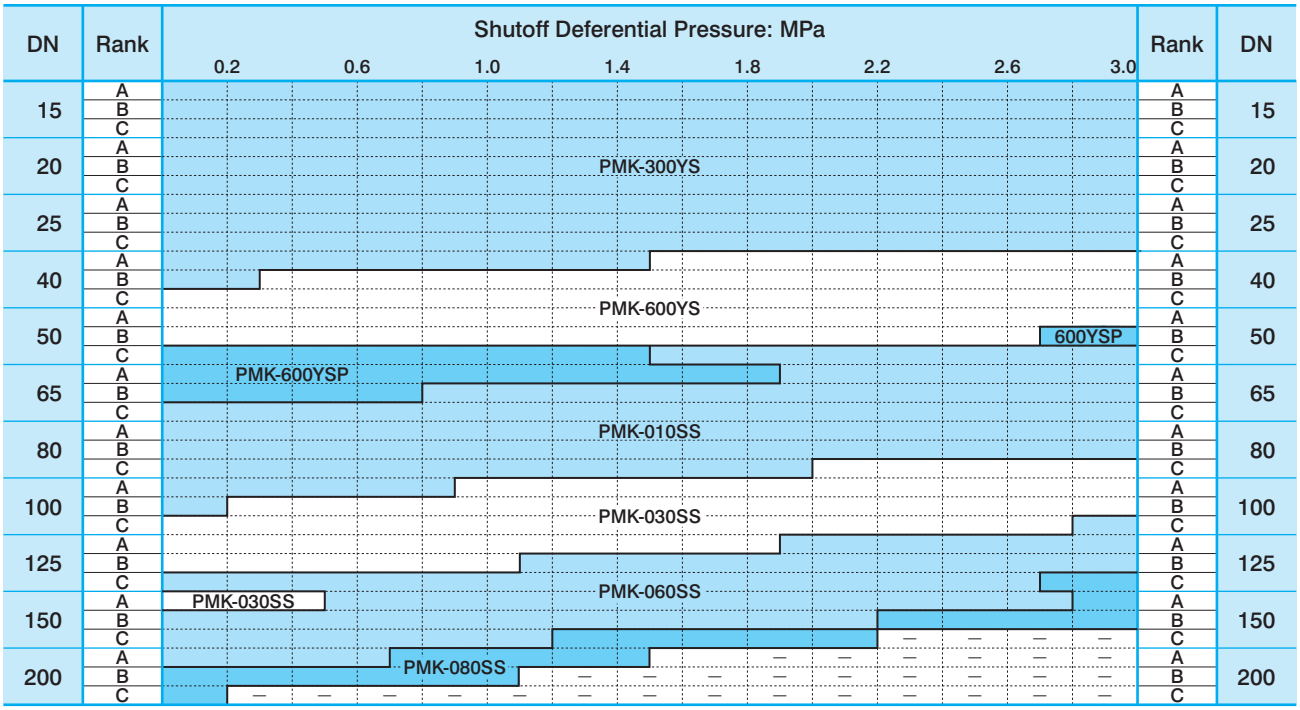

Dimension

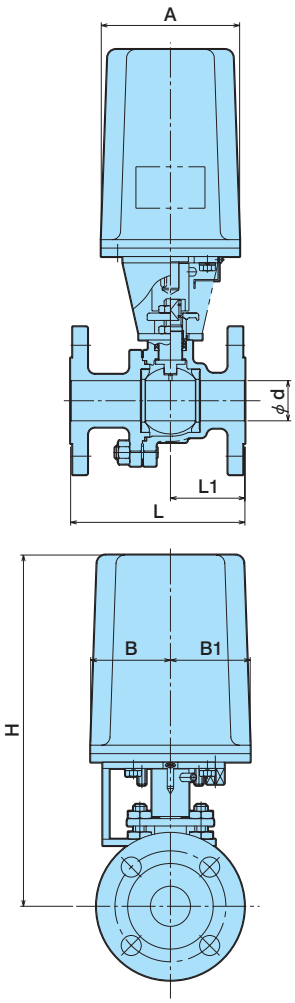

Unit: mm

Nominal size DN	Actuator Code	A	B	B1	d	10K CL150 L	10K CL150 L1	20K, CL300 L	20K, CL300 L1	H	Mass (Approx. kg) Stainless 10K CL150	Mass (Approx. kg) Cast Steel 20K CL300
15	PMK-300YS	131	75.5	75.5	13	108	45	140	63	301	7.7	8.1
20	PMK-300YS	131	75.5	75.5	19	117	50	152	70	306	8.3	8.8
25	PMK-300YS	131	75.5	75.5	25	127	51	165	71	314	9.8	10.5
40	PMK-600YS	131	75.5	75.5	38	165	70.5	190	76.5	333	12.3	—
40	PMK-600YS	131	75.5	75.5	38	165	70.5	190	76.5	333	12.5	13.3
50	PMK-600YS	131	75.5	75.5	51	178	80.5	216	86	342	14.5	16.1
50	PMK-600YSP	131	75.5	75.5	51	178	80.5	216	86	342	14.6	16.2
65	PMK-600YSP	131	75.5	75.5	64	190	87	241	103	368	19.6	23.1
65	PMK-010SS	178	70	70	64	190	87	241	103	425	22.0	25.5
80	PMK-010SS	178	70	70	76	203	97	283	124	435	25.0	31.5
80	PMK-030SS	197	76	76	76	203	97	283	124	470	—	34.0
100	PMK-010SS	178	70	70	102	229	116	305	135	467	37.0	48.5
100	PMK-030SS	197	76	76	102	229	116	305	135	502	39.5	51.0
125	PMK-030SS	197	76	76	127	356	148	381	158	537	58.5	72.0
125	PMK-060SS	272	100	100	127	356	148	381	158	659	76.0	89.0
125	PMK-080SS	272	100	100	127	356	148	381	158	659	—	89.0
150	PMK-030SS	197	76	76	152	394	173	403	178	558	73.5	—
150	PMK-060SS	272	100	100	152	394	173	403	178	680	87.0	101.0
150	PMK-080SS	272	100	100	152	394	173	403	178	680	87.0	101.0
200	PMK-060SS	272	100	100	203	457	207	502	235	740	128.0	—
200	PMK-080SS	272	100	100	203	457	207	502	235	740	128.0	—

Please contact NDV or local representative for the conbination of DN50-PMK010SS or DN80-PMK030SS

5-2 Electrically Operated 3-Way Ball Valve 2 Seats 3-Way Ball Valve: E□4300NB-L2
4 Seats 3-Way Ball Valve: E□4300NB-T4/L4
3 Seats 3-Way Ball Valve: E□4300N-T3/L3

Valve Codes

Valve Code for F□4300NB(N)

ESR4307NB-L2-NTF-050-( )-J10KRF

❶ ❷ ❸ ✻ ❹ ❺ ❻ ❼ ❽

E300NB-L2/T4(L4), E300N-T3(L3) (3-Way Ball Valve)

❶ Actuator (Electrically Operated Valve)

SR	SRH Type	Seibu Electric and Machinery
MSJ	SRJ Type	
SH	SHA, SD# Type	
PMK	PMK Type	Kawaden

❷ 4

Electrically Operated Valve

❸ Body Material

04	FCD400
07	SCS13A
12	SCS14A
13	SCS16A

❹ Seat Mechanism

	Port Shape	Seat Number
L2	L-Port	2
L3		3
L4		4
T3	T-Port	3
T4		4

❺ Seat Material (refer to P10)

NTF, NCF, NGR, CFM, CFMR

❻ Nominal Size (DN or A)

Conforming to ISO 6708 and JIS B 2001

❼ Actuator Code

According to the required actuator specification, 8 numbers code will be applied.

❽ Connection

J10KRF	JIS 10KRF
J20KRF	JIS 20KRF
A150RF	ASME CL150
A300RF	ASME CL300

✻ Improvement Identification Code

None	Original Design
N	First Improvement
NB	Second Improvement
NC	Third Improvement
ND	Fourth Improvement

ESR4300NB-L2-15/150, ESR4300NB-T4(L4)-15/100, ESR4300N-T3(L3)-125/150 (SRH Type Actuator)

Actuator Selection Table

Refer to P37 for selecting rank according to operating condition.

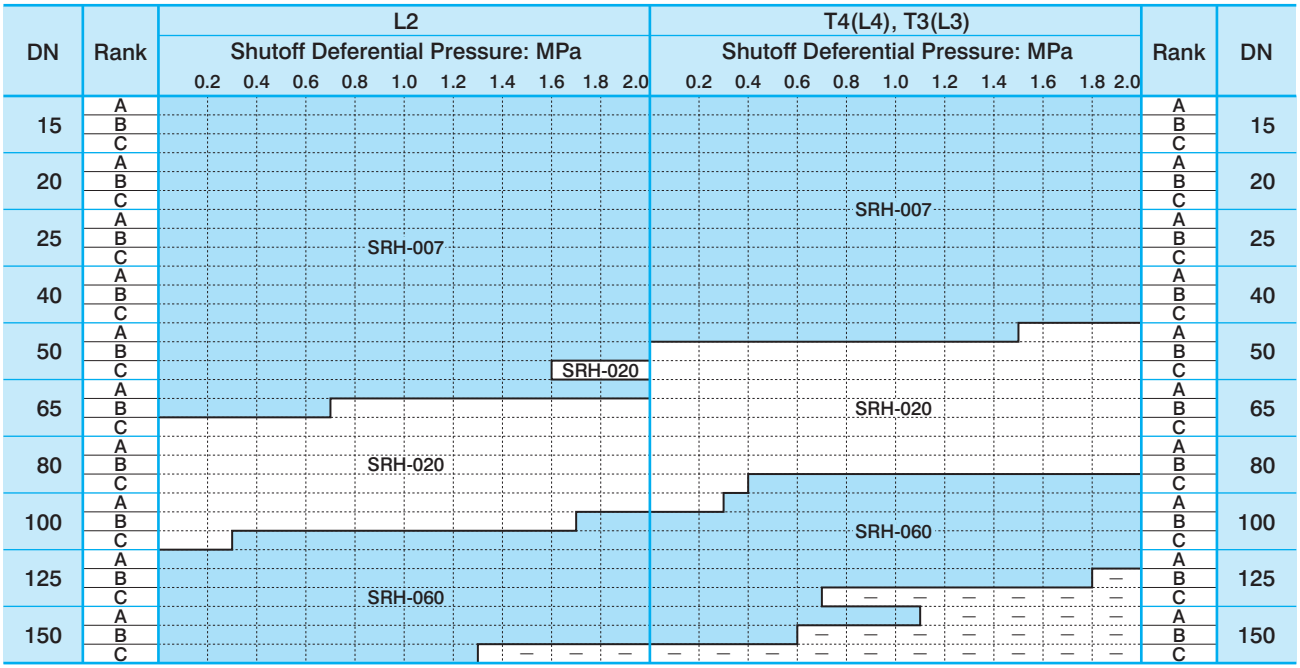

Dimension

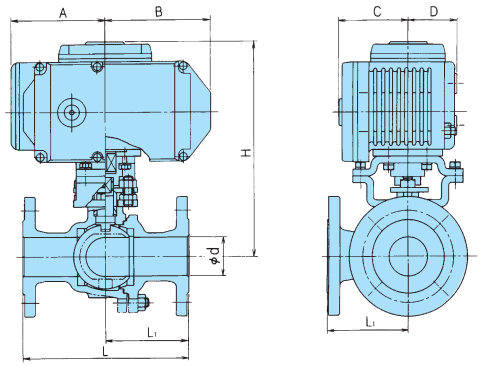

Unit: mm

Nominal size DN	Actuator Code	A	B	C	D	L2 d	L2 L	L2 L1	L2 H	L2 Mass (Approx. kg) Stainless Cast Steel 10K, CL150	T4 (L4), T3 (L3) d	T4 (L4), T3 (L3) L	T4 (L4), T3 (L3) L1	T4 (L4), T3 (L3) H	T4 (L4), T3 (L3) Mass (Approx. kg) Stainless Cast Steel 10K, CL150
15	SRH-007	100	108	75	60	13	146	73	213	8.3	19	140	70	232	10.0
20	SRH-007	100	108	75	60	19	150	75	217	9.6	19	140	70	232	10.5
25	SRH-007	100	108	75	60	25	170	85	233	11.3	25	160	80	244	13.0
40	SRH-007	100	108	75	60	38	200	100	251	15.2	38	180	90	258	15.0
50	SRH-007	100	108	75	60	51	230	115	259	19.8	51	200	100	283	20.5
50	SRH-020	121	135	90	63	51	230	115	279	22.3	51	200	100	303	26.0
65	SRH-007	100	108	75	60	64	260	130	287	28.0	—	—	—	—	—
65	SRH-020	121	135	90	63	64	260	130	307	32.0	64	240	120	337	39.0
80	SRH-020	121	135	90	63	76	280	140	317	36.5	76	260	130	340	40.0
80	SRH-060	158	164	133	85	76	280	140	—	—	76	260	130	364	47.5
100	SRH-020	121	135	90	63	102	340	170	351	51.0	102	330	165	355	47.0
100	SRH-060	158	164	133	85	102	340	170	375	56.0	102	330	165	379	54.5
125	SRH-060	158	164	133	85	127	370	185	413	82.0	127	430	215	413	103.0
150	SRH-060	158	164	133	85	152	430	215	433	103.0	152	500	250	425	126.0

Please contact NDV or local representative if specific installing direction for actuator is required.

EMSJ4300NB-L2-15/150, EMSJ4300NB-T4(L4)-15/100, EMSJ4300N-T3(L3)-125/150 (SRJ Type Actuator)

Actuator Selection Table

Refer to P37 for selecting rank according to operating condition.

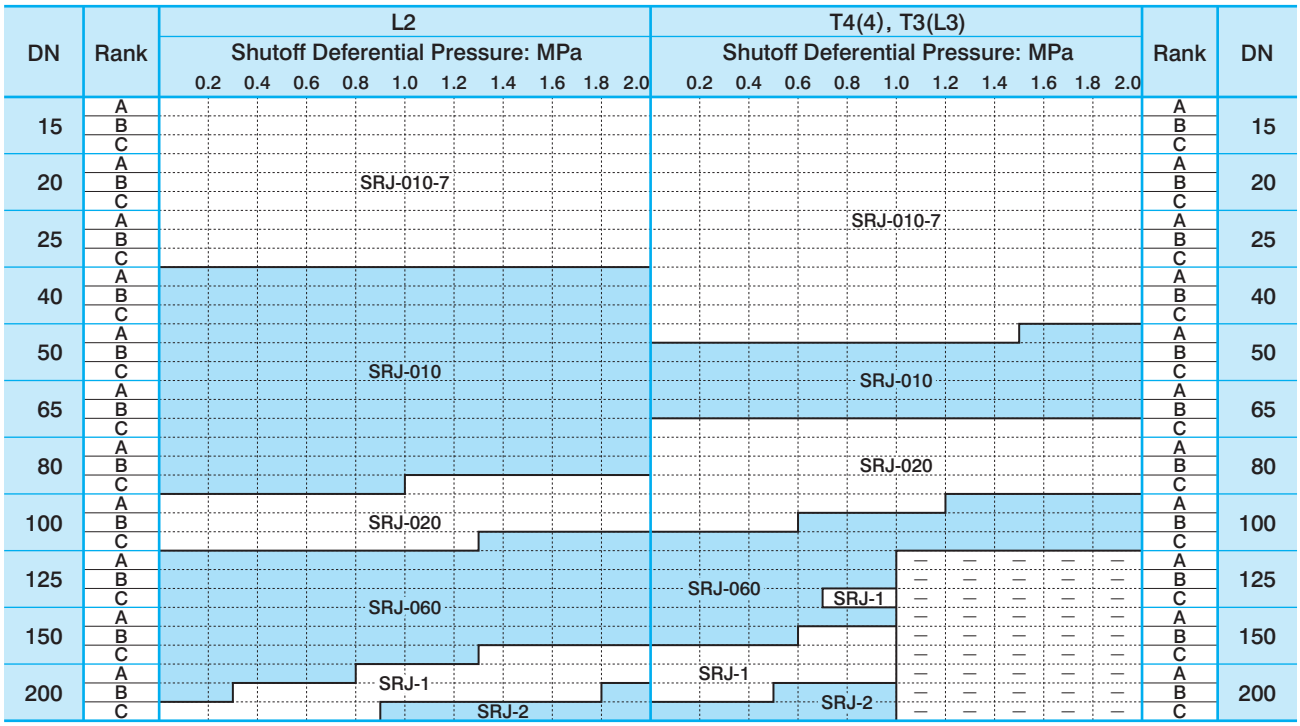

Dimension

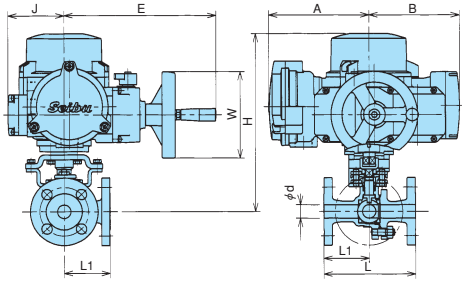

Unit: mm

Nominal size DN	Actuator Code	A	B	E	J	L2 W	L2 d	L2 L	L2 L1	L2 H	L2 Mass (Approx. kg) Stainless Cast Steel 10K, CL150	T4 (L4), T3 (L3) d	T4 (L4), T3 (L3) L	T4 (L4), T3 (L3) L1	T4 (L4), T3 (L3) H	T4 (L4), T3 (L3) Mass (Approx. kg) Stainless Cast Steel 10K, CL150
15	SRJ-010-7	186	167	272	104	160	13	146	73	328	19.3	19	140	70	344	22.5
20	SRJ-010-7	186	167	272	104	160	19	150	75	332	20.1	19	140	70	344	23.0
25	SRJ-010-7	186	167	272	104	160	25	170	85	345	22.2	25	160	80	356	24.0
40	SRJ-010-7	186	167	272	104	160	38	200	100	363	26.0	38	180	90	370	28.5
40	SRJ-010	186	167	272	104	160	38	200	100	363	26.0	38	180	90	370	28.5
50	SRJ-010-7	186	167	272	104	160	51	230	115	—	—	51	200	100	408	32.5
50	SRJ-010	186	167	272	104	160	51	230	115	371	28.8	51	200	100	408	32.5
65	SRJ-010	186	167	272	104	160	64	260	130	412	37.5	64	240	120	419	39.5
65	SRJ-020	186	167	272	104	160	—	—	—	—	—	64	240	120	419	39.5
80	SRJ-010	186	167	272	104	160	76	280	140	422	42.0	—	—	—	—	—
80	SRJ-020	186	167	272	104	160	76	280	140	422	42.0	76	260	130	442	45.5
100	SRJ-020	186	167	272	104	160	102	340	170	453	63.0	102	330	165	457	62.0
100	SRJ-060	202	191	316	130	245	102	340	170	492	64.0	102	330	165	496	71.0
125	SRJ-060	202	191	316	130	245	127	370	185	530	95.0	127	430	215	528	111.0
125	SRJ-1	240	267	354	191	245	—	—	—	—	—	127	430	215	593	138.0
150	SRJ-060	202	191	316	130	245	152	430	215	550	119.0	152	500	250	540	132.0
150	SRJ-1	240	267	354	191	245	152	430	215	620	144.0	152	500	250	605	161.0
200	SRJ-060	202	191	316	130	245	203	520	260	609	175.0	—	—	—	—	—
200	SRJ-1	240	267	354	191	245	203	520	260	669	197.0	203	650	325	649	224.0
200	SRJ-2	240	267	354	191	245	203	520	260	669	197.0	203	650	325	649	224.0

Please contact NDV or local representative if specific installing direction for actuator is required.

ESH4300NB-L2-125/200, ESH4300N-T3(L3)-125/200 (SHA Type Actuator)

Actuator Selection Table

Refer to P37 for selecting rank according to operating condition.

DN	Rank	L2 Shutoff Deferential Pressure: MPa (0 – 0.5 – 1.0)	T3(L3) Shutoff Deferential Pressure: MPa (0 – 0.5 – 1.0)	Rank	DN
125	A			A	125
	B			B	
	C			C	
150	A	SHA-02	SHA-02	A	150
	B			B	
	C			C	
200	A			A	200
	B		SHA-04	B	
	C	SHA-04		C	

Dimension

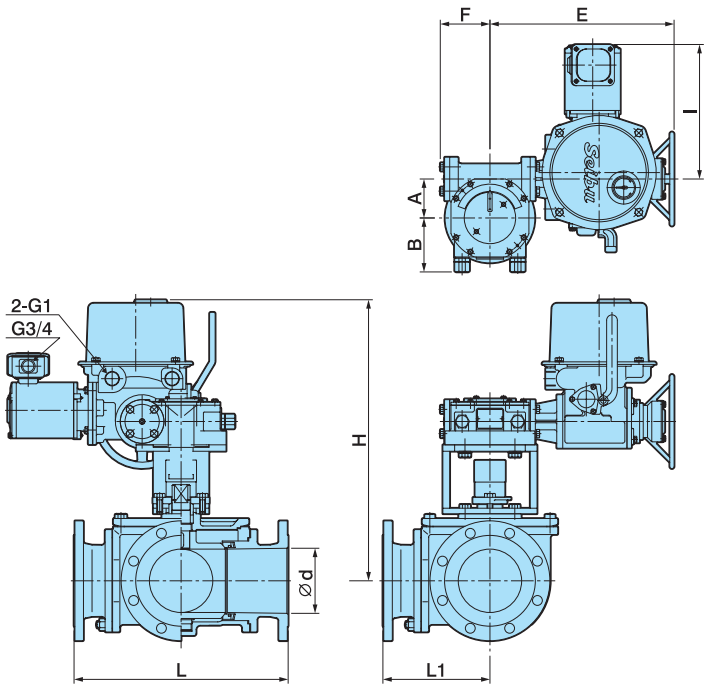

Unit: mm

Nominal size DN	Actuator Code	A	B	E	F	I	L2 d	L2 L	L2 L1	L2 H	L2 Mass (Approx. kg) Stainless Cast Steel 10K, CL150	T3 (L3) d	T3 (L3) L	T3 (L3) L1	T3 (L3) H	T3 (L3) Mass (Approx. kg) Stainless Cast Steel 10K, CL150
125	SHA-02	91	126	430	116	325	127	370	185	647	135.5	127	430	215	645	158.0
150	SHA-02					325	152	430	215	667	154.5	152	500	250	657	179.5
	SHA-04					318										
200	SHA-02					325	203	520	260	715	215.5	203	650	325	700	252.5
	SHA-04					318										

Please contact NDV or local representative if specific installing direction for actuator is required.

EPMK4300NB-L2-15/200, EPMK4300NB-T4(L4)-15/100, EPMK4300N-T3(L3)-125/200 (PMK Type Actuator)

Actuator Selection Table

Refer to P37 for selecting rank according to operating condition.

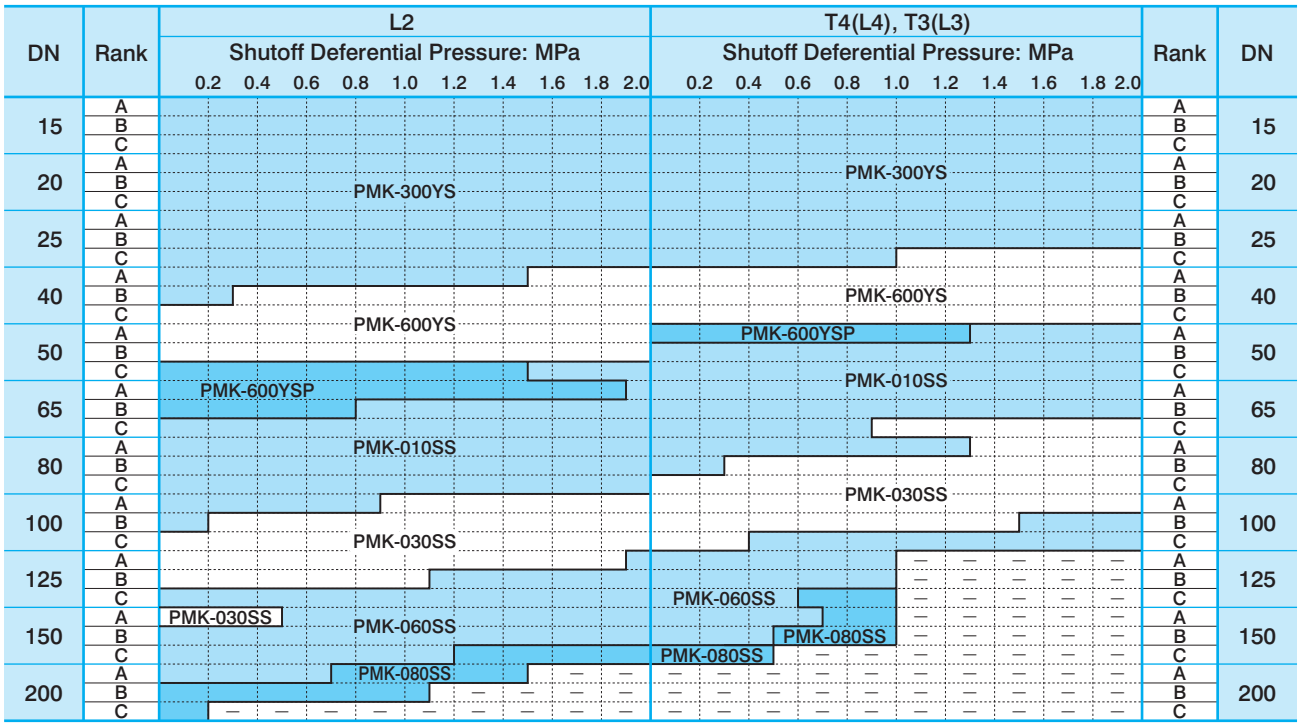

Dimension

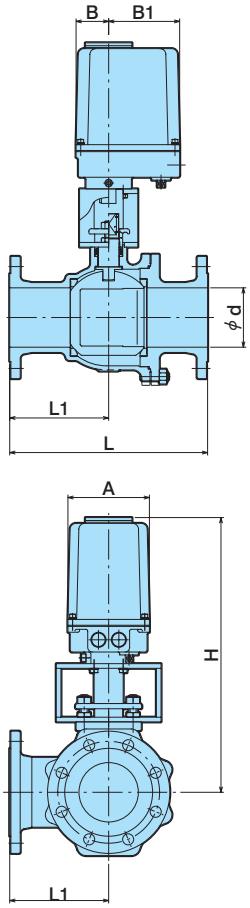

Unit: mm

Nominal size DN	Actuator Code	A	B	B1	L2 d	L2 L	L2 L1	L2 H	L2 Mass (Approx. kg) Stainless Cast Steel 10K, CL150	T4 (L4), T3 (L3) d	T4 (L4), T3 (L3) L	T4 (L4), T3 (L3) L1	T4 (L4), T3 (L3) H	T4 (L4), T3 (L3) Mass (Approx. kg) Stainless Cast Steel 10K, CL150
15	PMK-300YS	131	75.5	75.5	13	146	73	301	8.7	19	140	70	285	11.4
20	PMK-300YS				19	150	75	306	9.4				316	11.8
25	PMK-300YS				25	170	85	314	11.4	25	160	80		12.8
	PMK-600YS							—	—					13.0
40	PMK-300YS				38	200	100	333	14.6	38	180	90	—	—
	PMK-600YS								14.8				341	17.0
50	PMK-600YS				51	230	115	342	17.7	51	200	100	—	—
	PMK-600YSP								17.8				368	19.0
	PMK-010SS	140	56	122				404	20.6				422	23.0
65	PMK-600YSP	131	75.5	75.5	64	260	130	368	25.1	64	240	120	—	—
	PMK-010SS	140	56	122				425	27.5				432	29.5
	PMK-030SS	152	63	134				—	—				466	32.0
80	PMK-010SS	140	56	122	76	280	140	435	31.5	76	260	130	455	35.5
	PMK-030SS	152	63	134				—	—				485	38.0
100	PMK-010SS	140	56	122	102	340	170	467	46.0	102	330	165	—	—
	PMK-030SS	152	63	134				502	48.5				512	47.0
	PMK-060SS	200	73	199				—	—				634	65.5
125	PMK-030SS	152	63	134	127	370	185	537	72.5	127	430	215	—	—
	PMK-060SS	200	73	199				659	90.0				656	120.5
	PMK-080SS							—	—					
150	PMK-030SS	152	63	134	152	430	215	557	87.5	152	500	250	—	—
	PMK-060SS	200	73	199				680	105.0				669	142.0
	PMK-080SS													
200	PMK-060SS				203	520	260	740	170.0	—	—	—	—	—
	PMK-080SS													

Please contact NDV or local representative if specific installing direction for actuator is required.

5-3 Electrically Operated V-Port Valve: V□4100ND(NC)

Valve Codes

Valve Code for V□4100ND(NC)

VSR4107ND-CF-050-( )-J10KRF

❶ ❷ ❸ ✻ ❹ ❺ ❻ ❼

V100ND(NC) (V-Port Valve)

❶ **Actuator** (Electrically Operated Valve)

SR	SRH Type	Seibu Electric and Machinery
MSJ	SRJ Type	
PMK	PMK Type	Kawaden

❷ **4**

Electrically Operated Valve

❸ **Body Material**

07	SCS13A
12	SCS14A

❹ **Seat Material**

ST	Solid (Thick) Seat
M	Thin Seat
CF	Soft Seat

❺ **Nominal Size (DN or A)**

Conforming to ISO 6708 and JIS B 2001

❻ **Actuator Code**

According to the required actuator specification, 8 numbers code will be applied.

❼ **Connection**

J10KRF	JIS 10KRF
J20KRF	JIS 20KRF
A150RF	ASME CL150

✻ **Improvement Identification Code**

None	Original Design
N	First Improvement
NB	Second Improvement
NC	Third Improvement
ND	Fourth Improvement

VSR4100ND(NC) (SRH Type Actuator)

Actuator Selection Table

Refer to P37 for selecting rank according to operating condition.

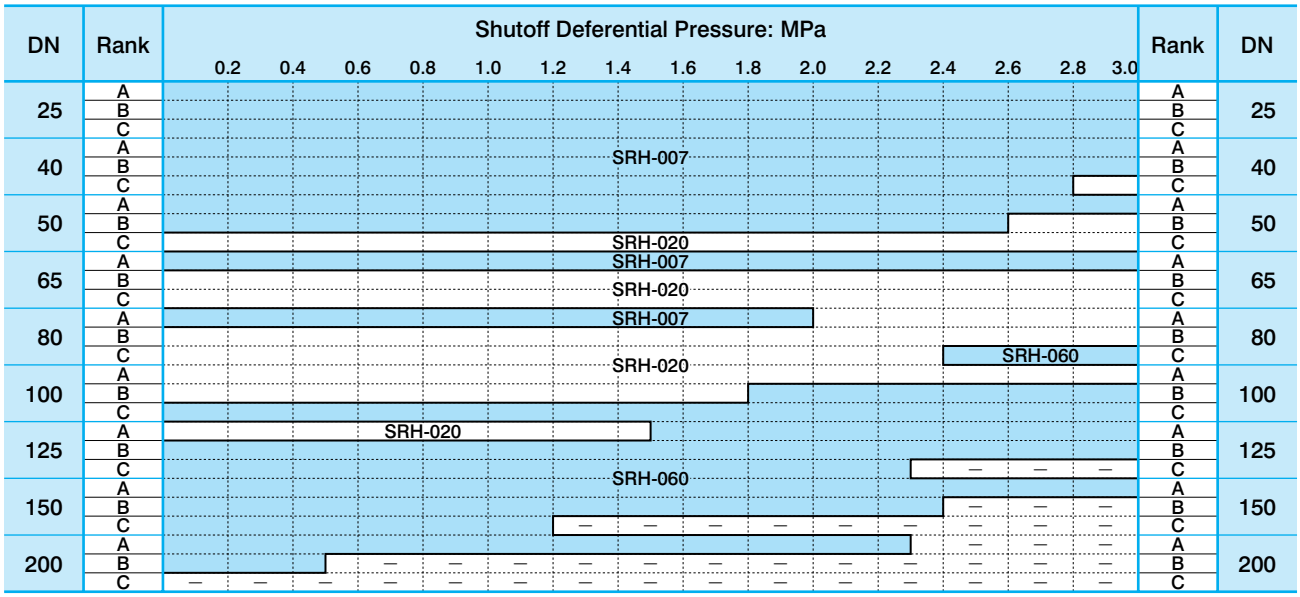

Dimension

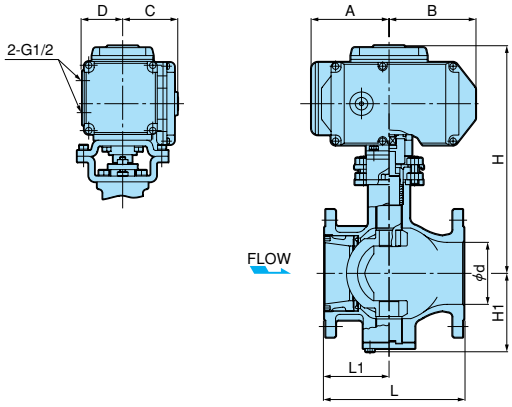

Unit: mm

Nominal size DN	Actuator Code	A	B	C	D	H1	H	d	L	L1	10K, CL150 Mass (Approx. kg) Stainless Cast Steel 10K, CL150	20K L	20K L1	20K Mass (Approx. kg) Stainless Cast Steel 20K
25	SRH-007	100	108	75	60	48	245.5	25	127	55	9.8	165	55	11.0
40	SRH-007	100	108	75	60	71	274.5	38	165	70	12.8	190	70	14.5
50	SRH-007	100	108	75	60	77	280.0	51	178	75	14.1	216	75	16.5
50	SRH-020	121	135	90	63	77	300.0	51	178	75	19.6	216	75	22.0
65	SRH-007	100	108	75	60	96	312.5	64	190	80	19.5	241	80	22.0
65	SRH-020	121	135	90	63	96	323.5	64	190	80	25.0	241	80	27.5
80	SRH-007	100	108	75	60	101	317.5	76	203	90	20.5	283	90	23.5
80	SRH-020	121	135	90	63	101	337.5	76	203	90	26.0	283	90	29.0
80	SHR-060	158	164	133	85	101	360.5	76	203	90	33.5	283	90	36.5
100	SRH-020	121	135	90	63	131	376.0	102	229	106	33.0	305	106	38.5
100	SRH-060	158	164	133	85	131	400.0	102	229	106	40.5	305	106	45.5
125	SRH-060	158	164	133	85	163	449.0	127	356	145	63.5	381	145	69.5
150	SRH-060	158	164	133	85	173	459.0	152	394	150	74.5	403	150	83.5

Please contact NDV or local representative if specific installing direction for actuator is required.

VMSJ4100ND(NC) (SRJ Type Actuator)

Actuator Selection Table

Refer to P37 for selecting rank according to operating condition.

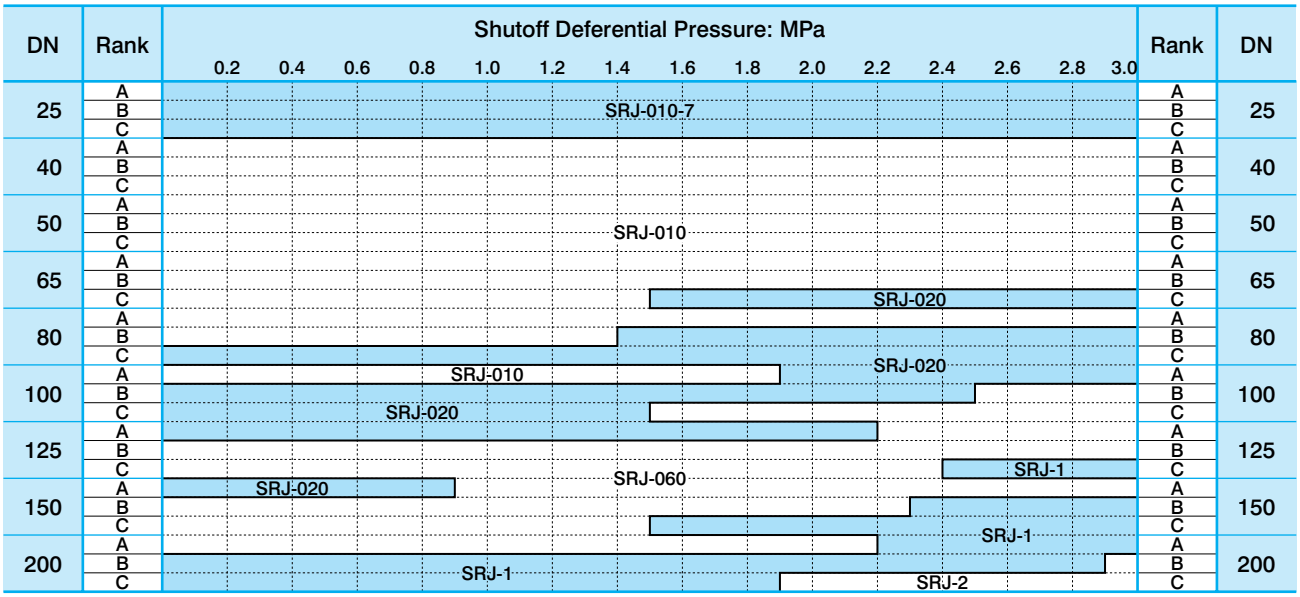

Dimension

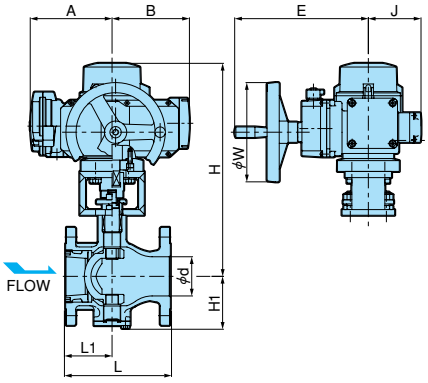

Unit: mm

Nominal size DN	Actuator Code	A	B	E	J	W	H1	H	d	10K, CL150 L	10K, CL150 L1	10K, CL150 Mass (Approx. kg) Stainless Cast Steel 10K, CL150	20K L	20K L1	20K Mass (Approx. kg) Stainless Cast Steel 20K
25	SRJ-010-7	186	167	272	104	160	48	359	25	127	55	20.6	165	55	21.8
40	SRJ-010						71	388	38	165	70	23.9	190	70	25.6
50	SRJ-010						77	394	51	178	75	25.2	216	75	27.6
65	SRJ-020						96	442	64	190	80	31.6	241	80	34.1
80	SRJ-010 SRJ-020						101	447	76	203	90	32.6	283	90	35.6
100	SRJ-010 SRJ-020						131	484	102	229	106	42.6	305	106	45.1
	SRJ-060	202	191	316	130	245		523				48.8			54.3
125	SRJ-020	186	167	272	104	160	163	544	127	356	145	66.7	381	145	72.7
	SRJ-060	202	191	316	130	245		566				78.2			84.2
	SRJ-1	240	267	354	191			636				109.6			115.6
150	SRJ-020	186	167	272	104	160	173	554	152	394	150	77.7	403	150	86.7
	SRJ-060	202	191	316	130	245		576				89.2			98.2
	SRJ-1	240	267	354	191			646				120.6			129.6
200	SRJ-060	202	191	316	130		211	627	203	457	200	122.8	502	200	134.8
	SRJ-1 SRJ-2	240	267	354	191			687				155.6			167.6

Please contact NDV or local representative if specific installing direction for actuator is required.

6

Special Purpose Ball Valve

6-1. High Temperature Ball Valve

- Metal Seat Ball Valve

6-2. Y-Shaped 3-Way Ball Valve

6-3. Ball Valve for Shield Tunneling Method

6-4. Top Entry Ball Valve

6-1 High Temperature Ball Valve

Metal Seat Ball Valve

Features of Metal Seat (Code: ST)

- Maximum Working Temperature 500°C (may have some limit according to the working condition.)
- Superior in abrasion resistance, applicable to abrasive fluids such as powder and slurry.
- Applicable to flow control at intermediate opening position.

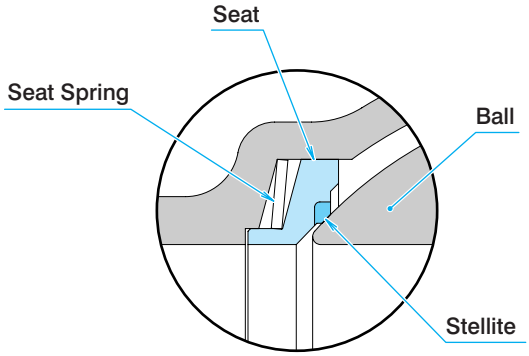

Inlet Side Seat

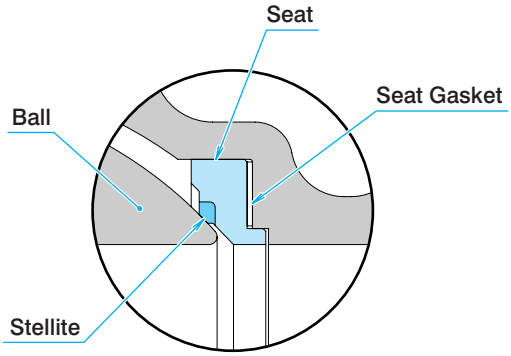

Outlet Side Seat

Specification

Applicable Type	F100NB, E100JNC
Nominal Size	DN15 to 200
Connection	Flanged type JIS10K, 20K (*1) Class (ASME, JPI) 150,300 (*2)
Body Material	FCD400, SCS13A, SCS14A
Seat Material	SUS304 & ST, SUS316 & ST
Ball Material	SUS304 & SFNi, SUS316 & SFNi (SFNi: Nickel base fusible alloy Thermal spraying deposit on Ball)

*1: JIS B2220 *2: ASME B16.5

Allowable Seat Leakage

Nominal Size (DN)		15	20	25	40	50	65	80	100	125	150	200
Allowable leakage (cc/min)	Hydraulic Pressure 0.3MPa	0.014	0.018	0.023	0.036	0.045	0.059	0.072	0.09	0.11	0.14	0.18
	Air Pressure 0.6MPa	0.8	1.1	1.4	2.2	2.7	3.5	4.3	5.4	6.8	8.1	10.8

Allowable Leakage of hydraulic pressure is according to ASME B16.104 Class V.
Allowable leakage for air pressure is calculated by those for hydraulic pressure considering water and air leakage ratio written in *JIS B2003 General rules for inspection of valves.*

Working Pressure and Temperature Range

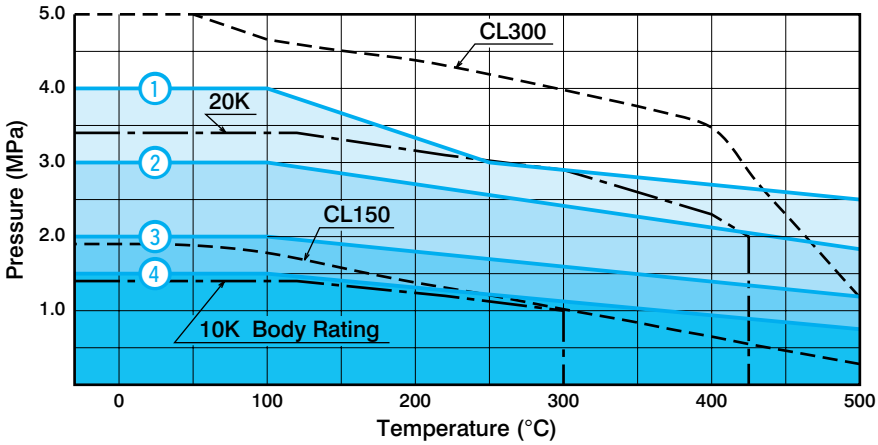

Dimension ①DN15 to 25 ②DN40 to 65 ③DN80, DN100 ④DN125 to 200

Parts and Materials

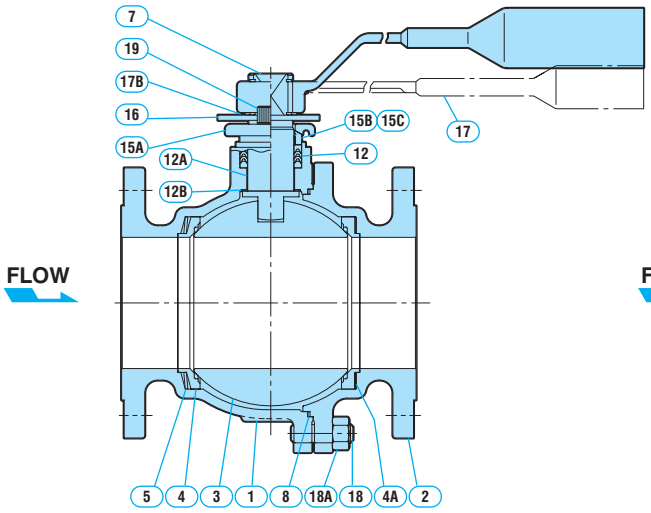

Standard Specification

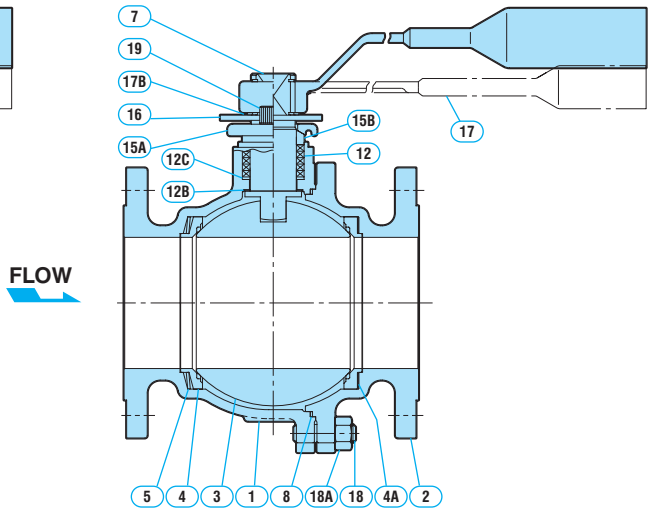

High Temperature Specification

Parts	Code / Working Temperature	Standard Specification F104NB-ST	Standard Specification F107NB-ST	Standard Specification F112NB-ST	High Temperature Specification FH107NB-ST	High Temperature Specification FH112NB-ST
		-5 to 250°C	-29 to 250°C		251 to 500°C (*2)	
1	Body	FCD400	SCS13A	SCS14A	SCS13A	SCS14A
2	Flange	FCD400	SCS13A	SCS14A	SCS13A	SCS14A
3	Ball	SUS304 & SFNi		SUS316 & SFNi	SUS304 & SFNi	SUS316 & SFNi
4	Seat	SUS304 & ST		SUS316 & ST	SUS304 & ST	SUS316 & ST
4A	Seat Gasket	High intensity fiber reinforced expanded graphite			Expanded graphite & SUS316L	
5	Seat Spring	SUS316CSP or SUS316H			SUS316CSP or SUS316H (*3)	
7	Stem	SUS304 (*1)		SUS316 (*1)	SUS630 (H900)	
8	Gasket	NTF			Expanded graphite & SUS316L	
12	Packing	NTF			Wire reinforced expanded graphite	
12A	Bearing	NTF			—	
12B	Thrust Washer	NTF			SUS304CSP	
12C	Gland Flange	—			SUS304CSP	
15A	Gland Packing	SCS13A			SCS13A	
15B	Gland Packing Ring	SUS304			SUS304	
15C	Stem Bearing	NTF			—	
16	Travel Stop	SUS304			SUS304	
17	Lever	Standard Lever & Pipe			Standard Lever & Pipe	
17B	Retaining Ring	SUS304			SUS304	
18	Stud Bolt	SNB7	SUS304		SUS304	
18A	Nut	S45C	SUS303		SUS303	
19	Cap Screw	S45C	SUS304		SUS304	

*1: DN15 and DN20 are of SUS329J1 *2: 400°C is the maximum in oxidative atmosphere. *3: Inconel X750 for over 351°C

6-2 Y-Shaped 3-Way Ball Valves

Main Applications

- High abrasive fluid such as Powder and Slurry
- Solid etc such as pellet
- Usage of pigs or spheres for cleaning piping

Features

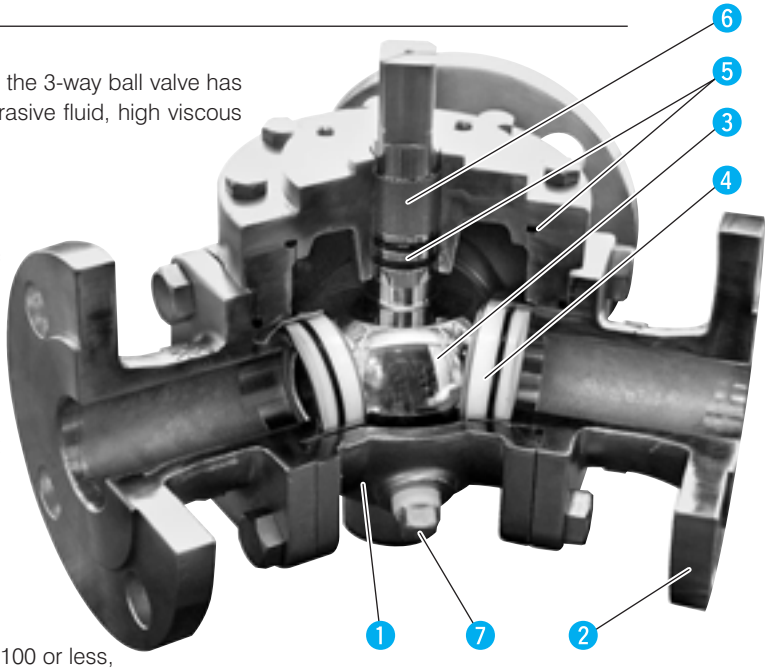

❶ Wide Angle Body Shape
While normal 3-way ball valve has a 90 degrees angle, the 3-way ball valve has a wide angle of 135 degrees. It is suitable for high abrasive fluid, high viscous fluid or usage of pigs or spheres for cleaning piping.

❷ Flexible installation position
Straight type and 22.5 degrees type flanges are available. By the combination of these two types of flange at three ports of valve, 54 piping patterns are possible. (Refer to "Flange Application Model")

❸ Ball Design
Since the ball and the stem are integrated (fixed valve), the gap of angle at the valve face and the stem will not occur. In addition since the radius curvature of the ball port is 1.5 times than that of the bore, pressure loss is small and the damage of the ball can be minimized even in high abrasion fluid flow.

❹ Inlet Side Seal Mechanism
The spring at the seat rear side (rubber cushion for DN100 or less, metal spring for DN125 or more) provides excellent sealing even in heat cycle and pressure fluctuations. Moreover, since the sealing is done at inlet side, the functional deterioration by fluid flowing into the pocket can be minimized.

❺ O-Ring Seal
O-Rings used at each seal provide stable sealing performance and eliminates the need for periodical tightening.

❻ Stable Bearing Performance
Reinforced PTFE are used for the bearings for the shafts above and below the ball. This prevents galling and enables the valve to cope with very frequent operation.

❼ Purge hole
The body has two purge holes. They can be used for the prevention of fluid congestion by air charge, the leakage check for seat abrasion, and the purge of fluid remaining at pockets.

Specification

Items		Specification
Nominal Size (DN)		25 to 300
Connection		Flange Type JIS10K (✻1), Class (ASME, JPI) 150 (✻2)
Max. Working Pressure		1.4 MPa
Max. Working Temperature		150°C
Materials	Body	Body SCS13A, FCD400 (DN65 or more), SCS14A✤, SCS16A✤
	Ball	SCS13A, SCS14A✤, SCS16A✤
	Seat	Reinforced PTFE (CF), Semi-metal Seat (SM)✤, Metal Seat (ST)✤
Operation	Manual	Lever (up to DN150), Gear (DN200 or more)
	Automatic	Pneumatical (double acting only), Electrical, Hydraulic

✤**Option:** ***1.*** Body Material: SCS14A, SCS16A
2. Hardening is treated on ball surface for semi-metal and metal seat.
✻1: JIS B2220 ✻2: ASME B16.5

Parts and Materials

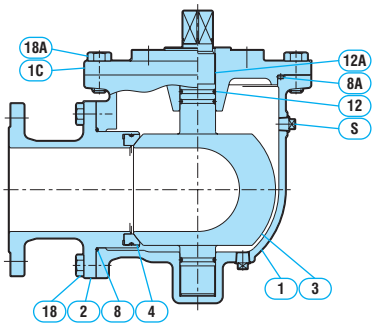

DN25~150

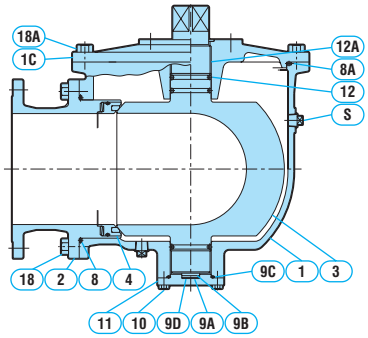

DN200~300

	Parts	Material	Remarks
1	Body	SCS13A	
1C	Body Cover	SCS13A	
2	Body Connector	SCS13A	
3	Ball	SCS13A	
		SCS13A & Surface hardening	for SM, ST Seat
4	Seat	Refer to Seat Details described below	
4A	Seat Retainer (CFRS)	Refer to Seat Details described below	
4B	O-Ring	Refer to Seat Details described below	
4C	Shim	Refer to Seat Details described below	
5	Seat Spring	Refer to Seat Details described below	
8	O-Ring	NBR (FKM) ✻	
8A	O-Ring	NBR (FKM) ✻	
9A	Pivot	SUS304	DN200 to 300
9B	Thrust Washer	Reinforced PTFE	DN200 to 300
9C	O-Ring	NBR (FKM) ✻	DN200 to 300
9D	Shim	SUS316	DN200 to 300
10	Bolt	SUS304	DN200 to 300
11	Trunnion Cover	SUS304	DN200 to 300
12	O-Ring	NBR (FKM) ✻	
12A	Bearing	SUS316 & Reinforced PTFE	
18	Bolt	SUS304	
18A	Bolt	SUS304	
S	Plug	SUS304	

Seat Details

	DN25 to 100		DN125 to 300	
	NTF, CF, GR	SM	CFRS, GRRS	SM
Sketch	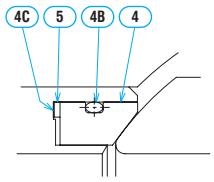	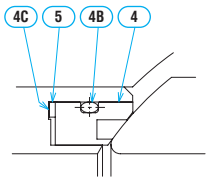	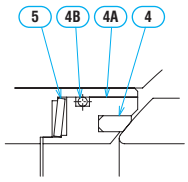	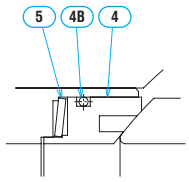
Parts	Material			
4 Seat	Reinforced PTFE	SUS & Reinforced PTFE	Reinforced PTFE	SUS & Reinforced PTFE
4A Seat Retainer	—	—	SUS304	—
4B O-Ring	NBR, FKM ✻	NBR, FKM ✻	NBR, FKM ✻	NBR, FKM ✻
4C Shim	SUS316	SUS316	—	—
5 Seat Spring	Silicone Rubber, FKM	Silicone Rubber, FKM	SUS329J4L	SUS329J4L

✻ O-Rings are of FKM (fluororubber) when fluid temperature is more than 80°C

Sealing Mechanism of SM (Semi-metal Seat)

Semi-metal seat has a structure that reinforced PTFE (CF: with carbon fiber, GR: with glass fiber) is inserted into metal retainer by hydraulic press and the gap between ball and metal retainer is designed to be minimum. (For CFRS and GRRS, reinforced PTFE is inserted by hand.) Therefore, solid matter in fluid can be blocked to enter into seal surface directly. In addition, even if a metal touch condition happens, the better sealing than normal metal touch condition can be maintained by metal-PTFE-metal triple seal.

Hard chromium plating is provided on the surface of ball considering abrasion resistance so that long lifetime can be attained without galling between ball and seat.

Records of Main Fluid: Corks powder, Resin pellet, CWM slurry

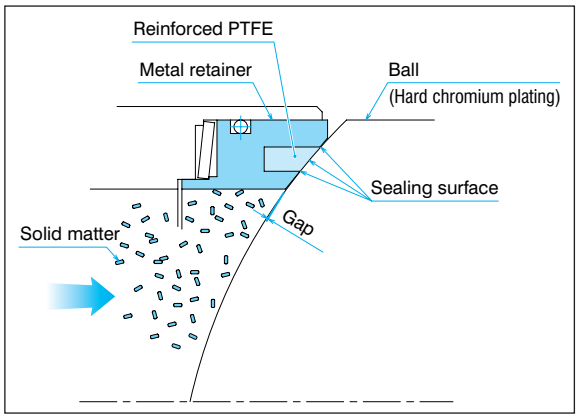

WN Type Pneumatic Actuator

Features

This actuator has been developed exclusively for 3-Way Ball Valve of which rotation angle is 135 degrees.
The actuator provides stable operation by applying simple rack and pinion design.
Maximum operating pressure is 0.7MPa.

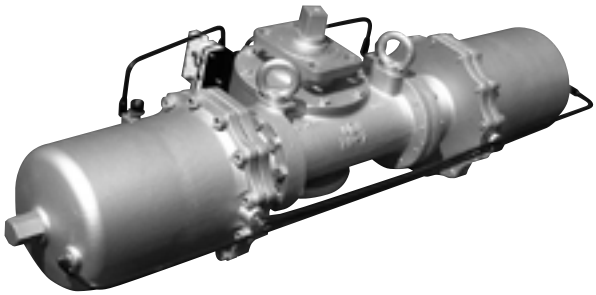

Specification

Code	Cylinder Volume (l)	Air Consumption (Nl) (Operating press 0.4MPa)	Mass (kg)	Specification
WN-1N	0.94	4.6	11	● Maximum Operating Pressure: 0.7MPa ● Ambient Temperature: -10 to 60°C ● Rotation Angle: 135° ● Bore Size:Bore Size: Rc1/4 (WN-1N to WN-4N) Rc3/8 (WN-5N to WN-7N) ● Painting: Silver (conforming to RoHS)
WN-2N	2.2	10.8	18	
WN-3N	4.4	22	28	
WN-4N	8.0	40	47	
WN-5N	17	84	86	
WN-6N	33	162	156	
WN-7N	58	282	256	

Actuator Selection Table

Unit: mm

DN	Rank	Actuator Code	
		Pneumatic	Operating
25	B	WN-1N	Lever
	C		
40	B		
	C	WN-2N	
50	B		
	C	WN-3N	
65	B	WN-2N	
	C	WN-3N	
80	B		
	C	WN-4N	
100	B		
	C	WN-5N	
125	B		
	C		Gear
150	B		Lever
	C	WN-6N	Gear
200	B		
	C	WN-7N	
250	B		
	C		
300	B		
	C	WN-7N (Operating Pressure 0.6MPa)	

Selection by Operating Condition (Rank)

Rank	Seat	Fluid (Example)
B	CF, CFRS	Oil, Sludge, Viscous Fluid (up to 500CP), Powder (Soft, not including solid matter)
C	SM	Powder (Hard/Soft, including solid matter), Slurry, High viscous fluid (Gum)

Operation Form (Example)

Arrow direction below shows the movement from the position before changeover.

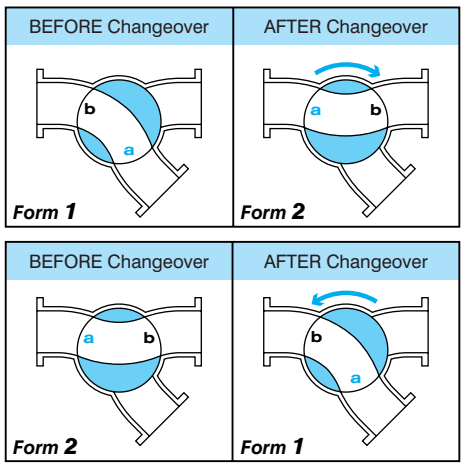

Dimension

Base Dimension

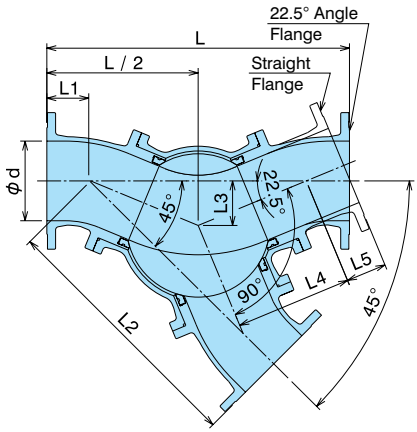

Unit: mm

DN	d	L	L1	L2	L3	L4	L5
25	25	230	50	180	27	70.4	44.6
40	38	250	51	199	31	80.1	44.9
50	51	280	56	224	35	90.9	49.1
65	64	320		264	43	112.6	47.4
80	76	360	69	291	46	120.1	59.9
100	102	460	76	384	64	166.7	63.3
125	127	530	84	446	75	195.9	44.1
150	151	580	73	507	90	234.9	30.1
200	200	760	110	650	111	292.2	47.8
250	249	800	86	714	130	339.7	60.3
300	298	1000	102	898	165	431.2	68.8

Manually Operated Valve Dimension

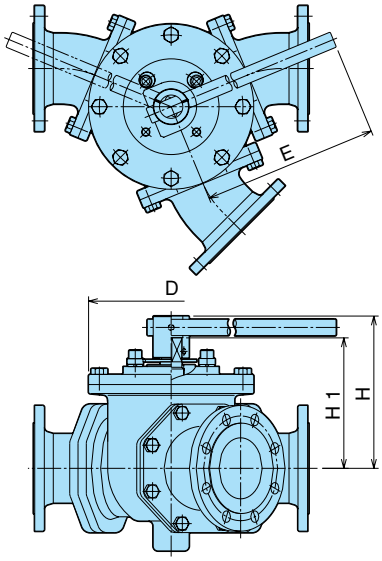

Unit: mm

DN	D	H	H1	E
25	100	122	—	250
40	130	152	—	350
50	156	163	—	350
65	190	198	—	670
80	212	212	—	670
100	276	255	—	970
125	320	271	—	1350
150	366	292	—	1350
200	476	—	328	—
250	534	—	393	—
300	634	—	422	—

Pneumatically Operated Valve Dimension

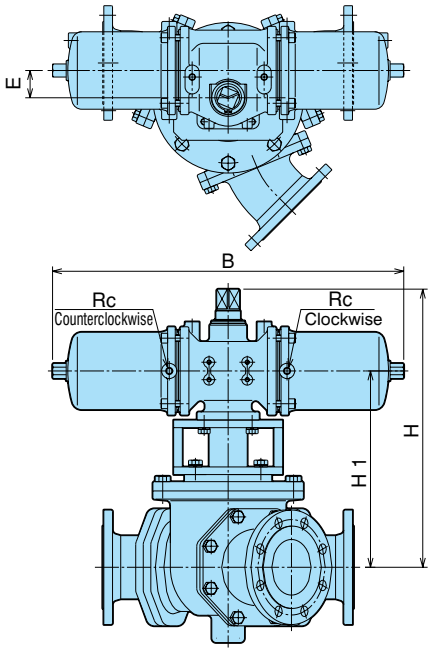

Unit: mm

DN	Actuator Code	H	H1	B	E	Rc
25	WN-1N	246	171	464	31	1/4
40	WN-1N	271	196			
	WN-2N	316	216	520	39	
50	WN-2N	327	227			
	WN-3N	346	239	624	45	
65	WN-2N	348	248	520	39	
	WN-3N	373	266	624	45	
80	WN-3N	386	279			
	WN-4N	430	300	828	65	
100	WN-4N	484	354			
	WN-5N	520	380	916	72	3/8
125	WN-5N	542	402			
150	WN-5N	563	423			
	WN-6N	674	440	1204	90	
200	WN-6N	742	508			
	WN-7N	773	530	1558	122	
250	WN-7N	844	601			
300	WN-7N	874	631			

Pattern (Flange Application Model)

No.	01	02	03	04	05	06
Combination	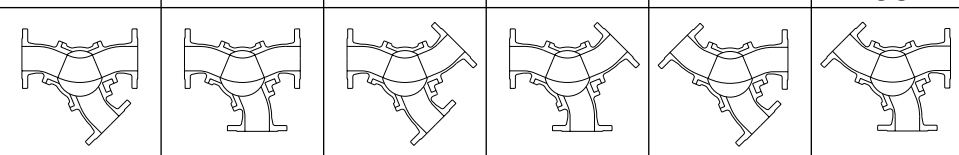					
No.	07	08	09	10	11	12
Combination	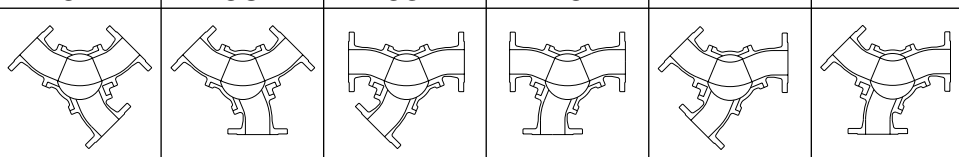					
No.	13	14	15	16	17	18
Combination	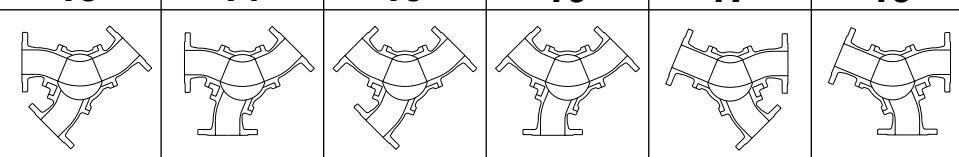					
No.	19	20	21	22	23	24
Combination	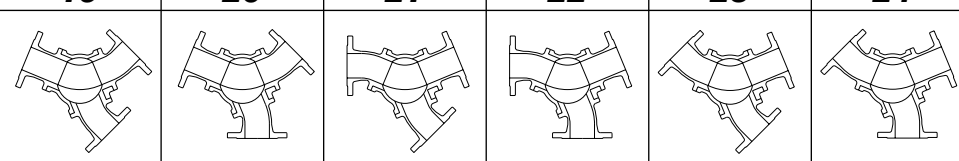					
No.	25	26	27	28	29	30
Combination	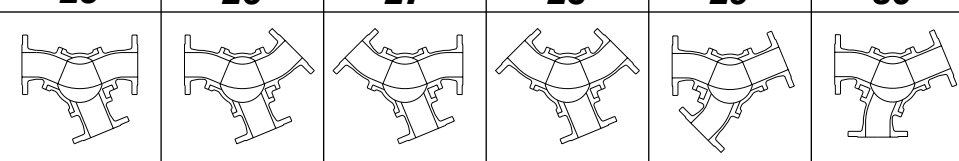					
No.	31	32	33	34	35	36
Combination	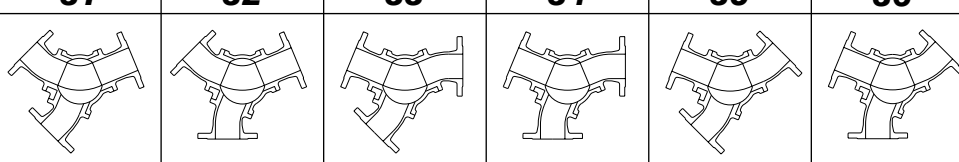					
No.	37	38	39	40	41	42
Combination	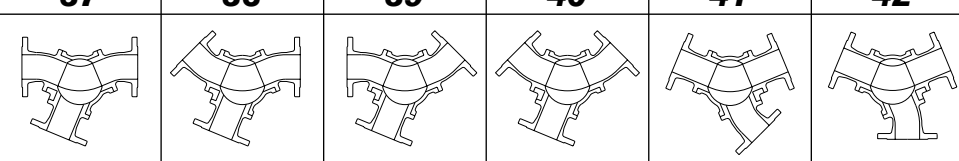					
No.	43	44	45	46	47	48
Combination	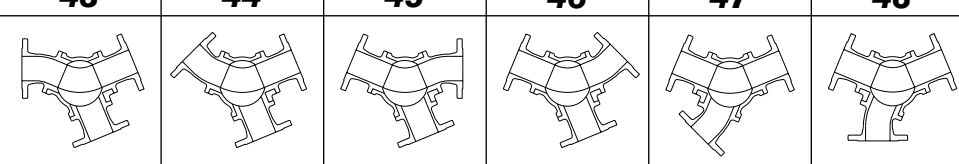					
No.	49	50	51	52	53	54
Combination	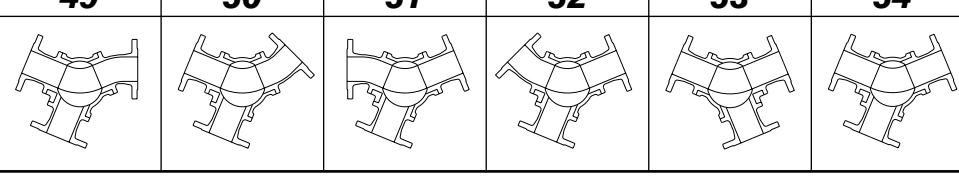					

6-3 Ball Valve for Shield Tunneling Method

Features

- Valves for Shield Tunneling Method have abundant supply records.
- Compact and robust design.
- Lever, Gear, Ratchet lever, Hydraulic and Pneumatic operation are applicable.

Specification

Manual Operation Type

Type	Lever		Gear		Ratchet Lever	
Ball	Floating		Floating	Trunnion	Floating	Trunnion
Valve Code	F104NB	ET101N	ETGH101N	EKTGJ101N	ETGRH101N	EKTGRH101N
DN	DN65 to100	DN125 to 200	DN125 to 200	DN250 to 350	DN125 to 200	DN250 to 350
Materials	Body: FC200 (FCD400 for up to DN100)					
	Ball: SCS13 (Hard chromium plating)					
	Seat: Reinforced PTFE					

Automatic Operation Type

Type	Hydraulic			Pneumatic
Ball	Floating		Trunnion	Trunnion
Valve Code	FTON1104NB	ETON1101N	EKTON1101N	EKTPN1101N
DN	DN65 to 100	DN125 to 200	DN200 to 350	DN200 to 350
Operating Pressure	21 MPa			0.4 to 0.7 MPa
Materials	Body: FC200 (FCD400 for up to DN100)			
	Ball: SCS13 (Hard chromium plating)			
	Seat: Reinforced PTFE			

Dimension

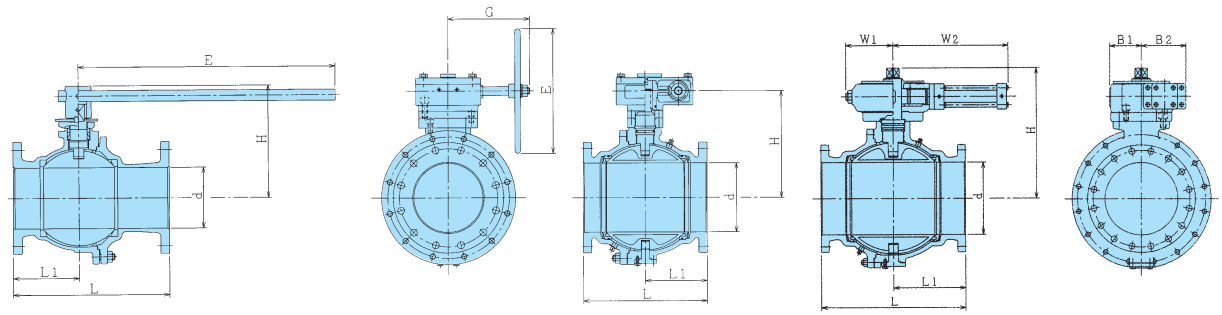

F100NB EKTGJ100N EKTON1100N

Unit: mm

Nominal size DN	d	L	L1	Lever E	Lever H	Lever Mass (kg)	Gear E	Gear G	Gear H	Gear Mass (kg)	Hydraulic W1	Hydraulic W2	Hydraulic B1	Hydraulic B2	Hydraulic H	Hydraulic Mass (kg)
65	64	190	87	350	135	13.5	—	—	—	—	108	272	74	110	211	25.0
80	76	203	97		145	16.5	—	—	—	—					221	28.0
100	102	229	115	450	180	27.0	—	—	—	—					248	38.5
125	127	290	145	650	260	57.0	280	160	250	84.0	153	379	106	148	304	80.0
150	152	330	165		280	72.0			270	98.0					324	96.0
200	203	400	200	800	350	110.0	315	200	325	147.0					377	143.0
250	250	450	225	—	—	—	450	295	385	280.0	195	458	130	184	464	260.0
300	300	600	300	—	—	—	560	375	415	430.0					541	390.0
350	335	700	350	—	—	—			440	620.0	225	528	160	202	566	640.0

6-4 Top Entry Ball Valve (T100S/H)

Features

Top entry type is that ball and seat can be taken out from the top of the valve. Welding connection is possible and the maintenance is easy. The valve is suitable for hazardous fluid or precious fluid of which leakage to the outside is not allowed.

Specification

		Valve Type	
		T100S	T100H
Nominal Size (DN)		8 to 100	
Pressure Class		CL150	CL300
Connection		SW (Socket Weld), BW (Butt Weld)	
Max. Working Pressure		1.4 MPa	2.1 MPa
Max. Working Temperature		100°C	150°C
Materials	Body	SCS13A, SCS14A, SCS16A, SCS19A	
	Ball	SUS304	
	Seat	PTFE	Reinforced PTFE
	Packing	Reinforced PTFE	
		FKM (O-Ring)	FKM or Perfluorogum (O-Ring)
	Gasket	SUS304 & Expanded graphite (Spiral wound type)	

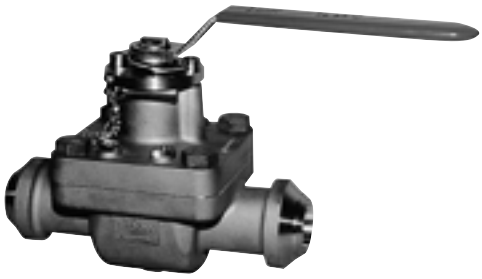

T100S Lever Operated Type

Dimension

T100S Lever Operated Type

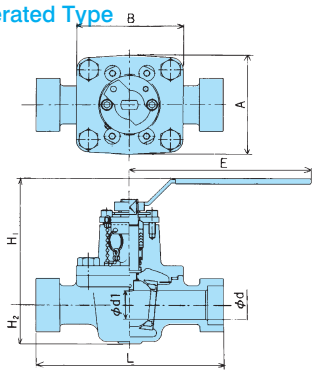

Unit: mm

DN	d	L	H1	H2	A	B	E	Mass (kg)
8	8	108	75	20	52	56	100	0.9
10	10							
15	13		95	23	65	68	130	
20	19	117	99	26	69	71		1.3
25	25	165	114	32	86	90	160	2.8
40	38		148	42	116	119	230	6.8
50	51	216	158	53	177	157		11.0
65	64	241	169	63	187	184	350	15.0
80	74	283	172	73	208	206		21.0
100	98	305	223	95	256	252	450	35.0

T100H Pneumatically Operated Type

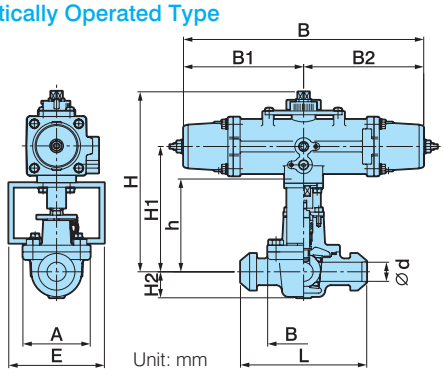

Unit: mm

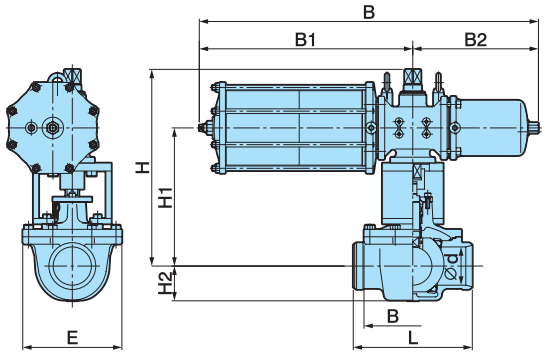

DN	d	L	H	H1	H2	A	B	E	h	Actuator					Mass (kg)
										Code	C	W	W1	W2	
8	8	108	176	122	20	52	56	70	93	PO-04D	212	—	—	—	2.5
10	10											—	—	—	
15	13		193	133	23	65	68	80	108	PO-05D	268	—	—	—	3.9
20	19	117	210	142	26	69	71		120	PO-06D	314	—	—	—	5.9
25	25	165	233	165	32	86	90	100	103			—	—	—	7.0
40	38		286	209	42	116	119	130	151	PO-08D	392	—	—	—	20.0
50	51	216	338	239	53	177	157		156	PO-10D	500	—	—	—	28.0
65	64	241	393	280	63	187	184	160	241	PO-12D	634	—	—	—	46.0
80	74	283	403	290	73	208	206		233			—	—	—	52.0
100	98	305	510	360	95	256	256	252	—	PO-13D	—	869	547	322	115.0

7

Safety Instructions

Safety Instructions

1. Selection of Valves

1. Usable ranges for products described on this brochure are limited according to the domestic/international code and standard and NDV standard. Appropriate products must be selected after confirming the usage conditions (fluid, pressure, temperature etc.).
2. Materials for the main parts of valves must be selected properly considering working conditions (fluid, temperature etc.).
3. Please specify degrease or water proof when issuing order. (Some of the products may not be applicable for degrease or water proof.)
4. Soft seat floating ball valve must be used at full open/close position. Usage at intermediate position may cause damages of the surface of ball and/or seat.
5. Because of the structure of ball valve, abnormal pressure rise at pocket (✻) occurs if the fluid is liquid and the temperature fluctuates. Ball top is provided with a hole to prevent this abnormal pressure rise. The alternative countermeasure should be taken incase the abnormal pressure rise happens by temperature rise at the pocket during valve full closing. Please consult with NDV or local representative if the case occurs.

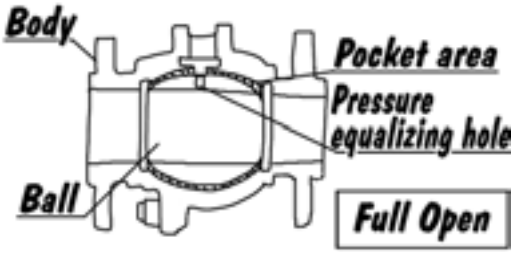

✻ During valve full OPEN: Space between ball and shell
During valve full CLOSE: Space between ball and shell, Ball bore portion

6. Floating ball valve has a mechanism to seal by pushing ball against the seat of the outlet side with fluid pressure. Please consult with NDV or local representative in case that the pressure change is large in operation condition because seat leakage may occur at low pressure operation.
7. Please consult with NDV or local representative in case that fluid includes abrasive matter because an abrasion may occur at seat, body or other parts of valve.

2. Receipt and Carriage

1. Wrapping and packing conditions, products condition and number of goods must be checked and confirmed at the time of the receipt.
2. Delivered goods may be heavy depending on the bore size. Unloading and carriage must be done using proper machines and tools according to the relevant law for safety and health. Do not go under lifted goods, do not insert hand or leg below goods and do not operate lifting machine under the lifted goods.
3. If packing is by corrugated board, the packing strength will become low when wetted. Handling must be carefully done if the corrugated board is wet.

3. Storage

1. It is recommended to store products under packing condition until installing them to piping.
2. If products are stored for some time after unpacking, dust proof seal (cap) at flange face must not be removed.
3. Products must be stored under below mentioned conditions in order to avoid rust and/or degradation of materials.
   1. To protect from rain or water
   2. Ambient temperature must be below 50°C
   (The temperature might be different by installed accessories.)
   3. To avoid high humidity and dust atmosphere

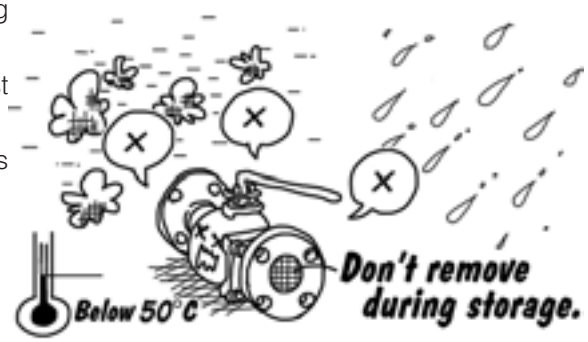

4. Installation to Piping

1. Remove dust proof seal (cap) at connection flange face and confirm that there are no dusts and/or deposits inside. Confirm also that there are no foreign materials inside of the piping after cleaning. Blow off by air or flush by fluid if necessary.
2. Ball valves have not a restriction for the flow direction. Install valves to piping considering the position of operation handle and the other necessary issues for safety operation. If flow direction is marked on the valve for some reason such as a protection of abnormal pressure rise, install as directed by the mark.
3. Keep a space for overhauling. The space needs necessary area for lifting a complete set of the valve.
4. Valves are delivered at full open position unless otherwise specified. Install valves keeping full open position.
5. Install valves avoiding strong tension, compression or bending stress to the valves.
6. When installing valves, bolts for installation must be tightened diagonally and equally. Unbalanced tightening may cause leakages from connection flanges.
7. Confirm that tightening bolts and nuts are not loosened. Retighten them if loosened.
8. After installing valves, blowing off by air or flushing by fluid at full open valve condition must be done to clean foreign materials in piping. (Do not close and open valve during blowing off or flushing.)

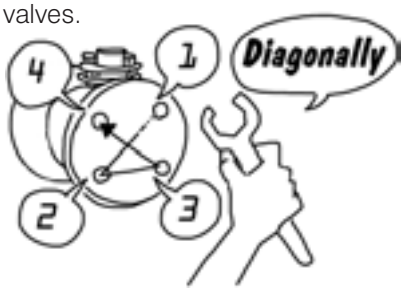

5. Operation

1. Do not operate valve with excessive torque by attaching a pipe or a wrench to the lever handle for opening or closing.
2. Never put fingers or hands into the inside of valve.
3. If there is any leakage from the gland, tighten further the gland bolt. If valve is used for fluid of large temperature change, degree of stress relief of packing is large and therefore, retightening must be done after the temperature once becomes high and falls to low.
4. Products may be damaged if remaining fluid in the valve is frozen. If there is a possibility of frozen, heat piping line or clean the inside of valves.

6. Pneumatical and Electrical Actuator

1. Air vent and electric wiring terminal are fitted with seals. Do not remove the seals until installation to the connections.
2. Actuators are delivered after adjustment. Do not disassemble or readjustment. Call NDV or local representative, if some adjustment seems necessary.
3. Use air dehumidified and cleaned by filtration.
4. Operating pressure and power source must be confirmed by the plate attached to the valve and/or the specification.
5. Take care that rain or water will not enter from air hole of the actuator.

7. Disassembling and assembling

1. Before remove a valve from piping, discharge the fluid in the piping and relieve the pressure. In this occasion, the valve must be opened and closed several times to relieve the pressure in the valve. Special attention must be given if the fluid is hazardous like poisonous or abrasive fluid.
2. Be careful not to damage the seal part of ball surface and flange face during disassembling and assembling.

Memo

● The ISO 9001 · 14001 certificate was awarded

ISO9001 99QR-167
ISO14001 08ER-701

⚠ CAUTION

Specifications and performance figures of products contained in this catalog are on the design calculations, in-house tests, actual records of product application, and the official standards and specifications. They are presented as the user guide on the use of product concerned under general service conditions. Users intending to use the product under a special condition are required to receive engineering advice from this company in advance or to make their own studies and evaluation to verify performance on their own responsibility. This company shall not be liable for any damages, material or human, that may arise without following this procedure. In as much as full care was taken in editing this catalog, users are kindly requested to make contact with this company for any questions or discrepancies found. This catalog is subject to change without notice for the purpose of correcting error, supplementing or improving insufficient content, updating the content to the improved product performance, design change, discontinuation of product and other reasons. Revised version automatically invalidates catalogs issued prior to the current version. Check the version with our Sales Dept. or local representative before you place orders.

⚠ WARNING ⚠ CAUTION

There are several points to be noticed for the use of ball valve based on the structural characteristics. When valve is delivered, a leaflet for Safety Instructions is in the package. Please read this instruction thoroughly before handling and use of products in order to use them safely and stably for a long time.

NDV NIPPON DAIYA VALVE CO., LTD.

Head Office: 1-3-22, Hiro-machi, Shinagawa-ku, Tokyo 140-0005
TOKYO Sales Department: Tel. TOKYO (03)3490-4801 Fax. TOKYO (03)3490-7950
INTERNATIONAL Sales Department: Tel. TOKYO (03)5434-5330 Fax. TOKYO (03)5434-5331

NAGOYA Branch: 3-2108, Nakajima-shincho, Nakagawa-ku, Nagoya-shi, Aichi 454-0932
Tel. AICHI (052)354-3171 Fax. AICHI (052)354-3174

OSAKA Branch: Takakura Bldg., 2-5-9, Awaji-machi, Chuo-ku, Osaka-shi, Osaka 541-0047
Tel. OSAKA (06)6203-7721 Fax. OSAKA (06)6222-5895

OKAYAMA Branch: Ima 8-chome, No.2 Bldg., 3-35, Ima 8-chome, Kita-ku, Okayama-shi, Okayama 700-0975
Tel. OKAYAMA (086)241-2669 Fax. OKAYAMA (086)244-3540

KITA-KYUSHU Branch: 2-2-4, Tate-machi, Kokurakita-ku, Kitakyushu-shi, Fukuoka 803-0818
Tel. FUKUOKA (093)571-2438 Fax. FUKUOKA (093)591-3277

http://www.ndv.co.jp

19. 03. H0.5A
15. 03.