GAUGES

KANEKO'S

DIRECT READING
LIQUID LEVEL GAUGES

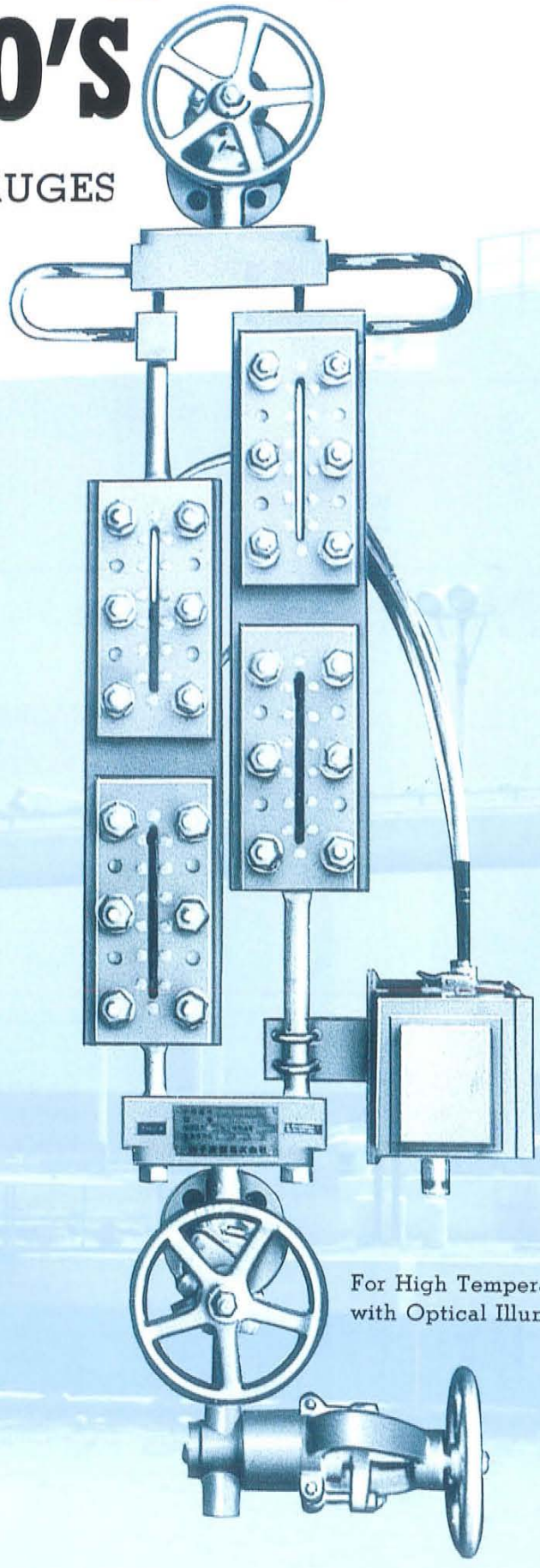

For High Temperature Liquid Level Gauge
with Optical Illuminator

General Description

ARMORED GAUGE

KANEKO

Reflex Gauge: Grauge Glasses are designed for the direct observation of Liquid Levels in tanks. The inner surface of the glass has reflecting prisms. Liquid Level shows black (Liquid's Color) empty space shows white reflect.

Transparent Gauge: See through observation of level.

Liquid Chamber: Reflex Gauge and Transparent Gauge, all flat glass gauges have a one-piece chamber machined out of steel bar. Carbon steel, stainless steels. Other special metals may be specified. carefully machined gasket seats and specially selected gasket provide positive seal between glass and chamber. Carbon steel chamber are rust-proofed.

Glass: Toughened Alumina silicate Glass ALMAX II for high temperature and high pressure or borosilicate glass highly resistant to thermal shock.

TYPE R

REFLEX GAUGE

Series R-10, R-20, R-50 and R-100

Series R-50 and R-100. Series T-50 and T-100 avoilable Zig-Zag gauge construction

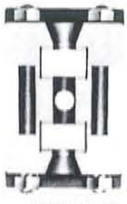

TYPE T

TRANSPARENT GAUGE

Series T-10, T-20, T-50 T-100 and T-S100 Explosion-proof (JIS-d2G4) or Optical Illuminators to use for option.

TYPE RF

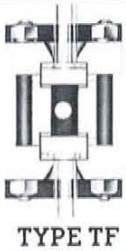

TYPE TF

NON-FROSTING of REFLEX and TRANSPARENT GAUGE

For low temperature applications, with a special frost preventing unit that projects beyond the cover bolts so that frost cannot build up across the vision slot in the cover.

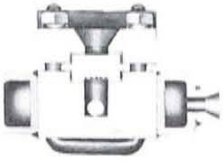

TYPE RJ

JACKETED of REFLEX and TRANSPARENT GAUGE

For use with heated gauges, have a jacket surrounding the heating medium.

TYPE TJ

TYPE RC

LARGE CHAMBER REFLEX and TRANSPARENT GAUGE

For easy level reading of boiling liquids. The gauge valves should be insulated and the gauge equipped with a non-frosting unit (Type RCF and TCF). Both the guages are 45 and 36mm diameter of inside chamber.

TYPE TC

SQUARE CHAMBER GAUGES PRESSURE-TEMPERATURE CHARTS KANEKO REFLEX and TRANSPARENT GAUGES.

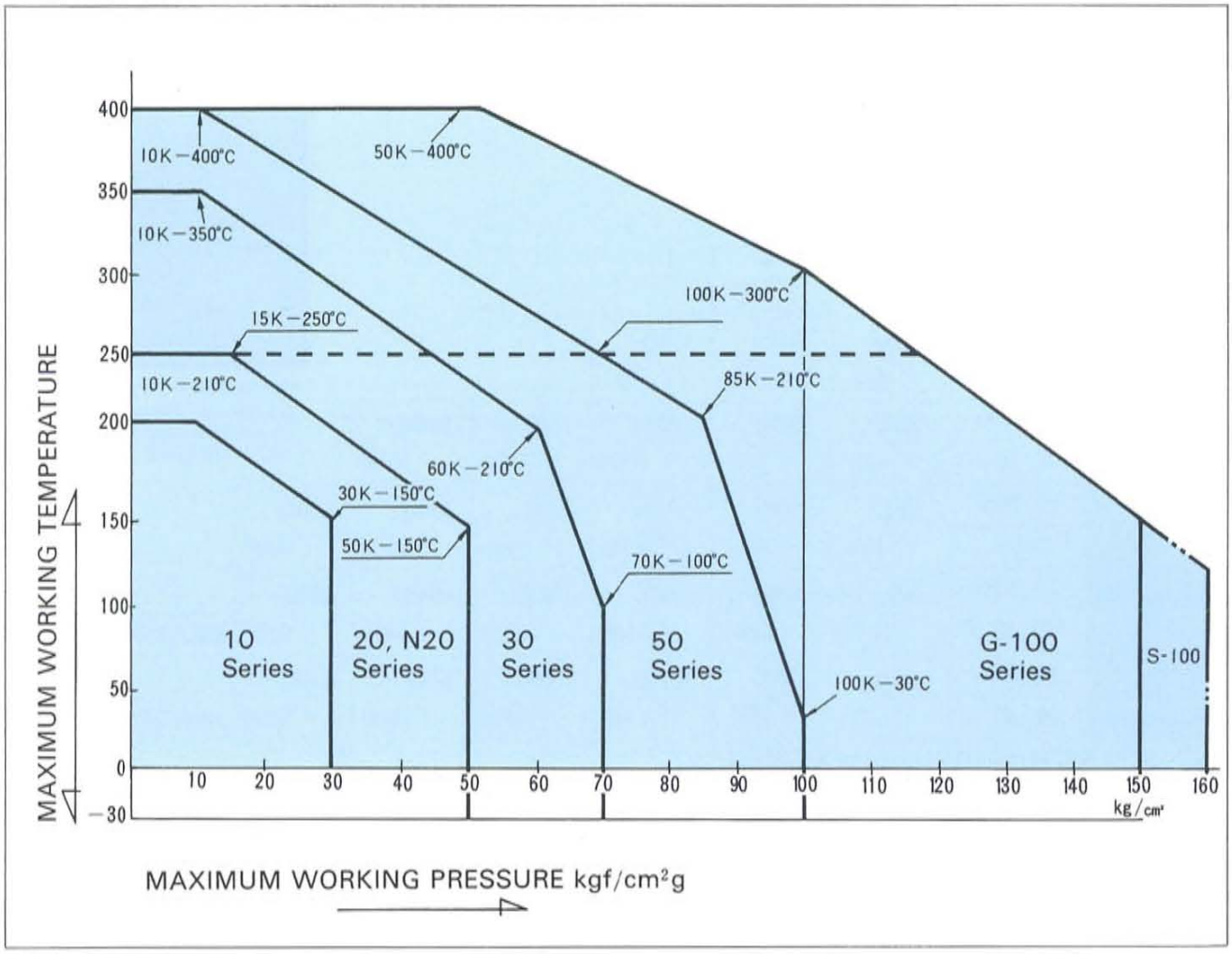

LARGE CHAMBER GAUGES

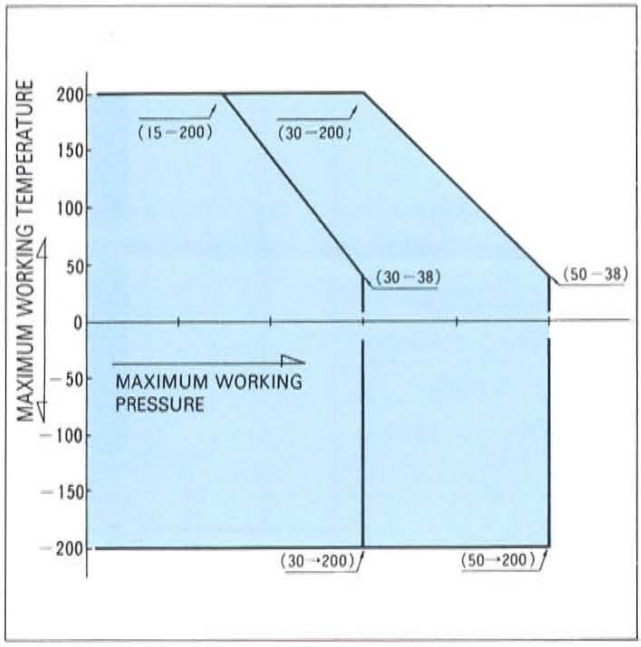

EXPLANATION FOR RANGE OF TEMPERATURE & PRESSURE.

1. Each Series, are available within the circle of thick line.
2. 100 Series have two kinds, used of Gasket, and Seal Ring.
3. From 20 Series to 100 Series, in case of over 250° C of working temperature (Upper portion from dotted line in above Figure.) for protecting heat Expantion, connect liquid chamber and upper gauge valve with U type pipe.

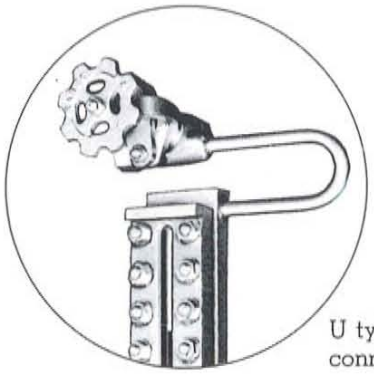

U type pipe connection

SERIES 10, N20, 20, 30 STRAIGHT LINE REFLEX TYPE/TRANSPARENT GAUGE.

GLASS No.	SERIES No.	Visible length (VL)/Center to Center (C to C)							
		1 Sect	2 Sect	3 Sect	4 Sect	5 Sect	6 Sect	7 Sect	8 Sect
1	10, N20	171/385							
	20, 30								
2	10, N20	181/395	398/610						
	20, 30								
3	10, N20	201/415	438/650						
	20, 30								
4	10, N20	231/445	498/710	765/975					
	20, 30								
5	10, N20	261/475	558/770	855/1065	1152/1365	1449/1660			
	20, 30								
6	10, N20	281/495	598/810	915/1125	1232/1445	1549/1760	1866/2080		
	20,30								
7	10, N20	301/515	638/850	975/1185	1312/1525	1649/1860	1986/2200	2323/2535	2660/2870
	20, 30								
8	10, N20	321/535	678/890	1035/1245	1392/1605	1749/1960	2106/2320	2463/2675	2820/3030
	20, 30								

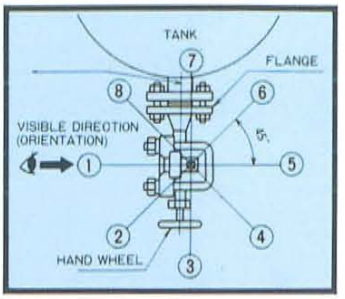

〈EXAMPLE〉
①Right side Hand Wheel
③Centered Hand Wheel
⑤Left side Hand Wheel

But, 10 Series, Manufacturing up to 4 Sections.
N20 Series, Manufacturing up to 6 Sections.

SERIES 50, 100 ONE-PIECE CHAMBER REFLEX AND TRANSPARENT GAUGE.

GLASS No.	SERIES No.	VL/C to C				
		1 Sect	2 Sect	3 Sect	4 Sect	5 Sect
1	50	170/450	397/670	624/900		
	100	170/570	410/810	650/1050	890/1290	
2	50	180/460	417/700	654/930		
3	50	200/480	457/740	714/990	971/1250	1228/1510
4	50	230/510	517/800	804/1080	1091/1370	1378/1660
5	50	260/540	577/860	894/1170	1211/1490	1528/1810

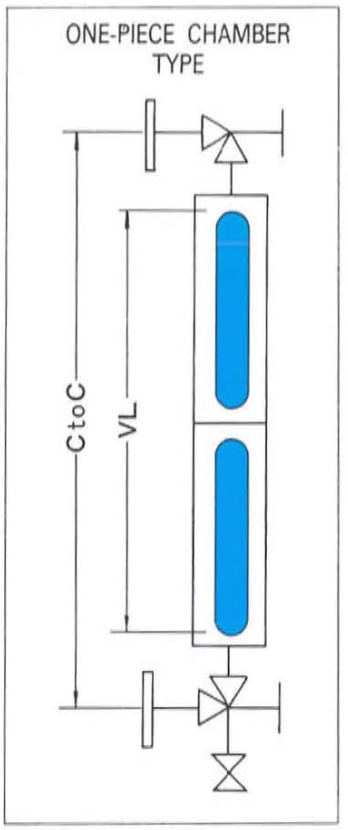

〈Size No.〉

No. of section — Reflex — Non-Frosting

3×8 RF−20

Glass No. — Series No.

(Note) R = Reflex, T = Transparent, F = Non-Frosting
J = Jacketed, C = Large Chamber

SERIES 20, 30 STRAIGHT LARGE CHAMBER. REFLEX/TRANSPARENT GAUGE.

GLASS No.	SERIES No.	VL/C to C			
		1 Sect	2 Sect	3 Sect	4 Sect
1	20, 30	171/415			
2		181/425	398/640		
3		201/445	438/680		
4		231/475	498/740	765/1010	
5		261/505	558/800	855/1100	
6		281/525	598/840	915/1160	1232/1480
7		301/545	638/880	975/1220	1312/1560
8		321/565	678/920	1035/1280	1392/1640

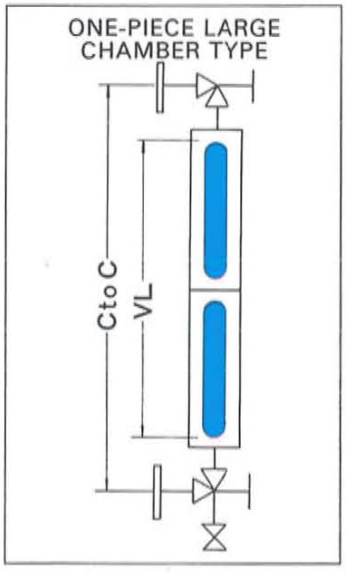

SERIES 10, 20, N20, 30, 50, 100 ISOLABLE TYPE REFLEX/TRANSPARENT GAUGE

GLASS No.	SERIES No.	VL/C to C				D
		2 Sect	3 Sect	4 Sect	5 Sect	
1	100	320/820	470/970	620/1120		170
4	50	440/940	650/1150	860/1360	1070/1570	230
7	10, 20 N20	582/1085	863/1365	1144/1645	1425/1925	301
	30	582/1085	863/1365	1144/1645	1425/1925	

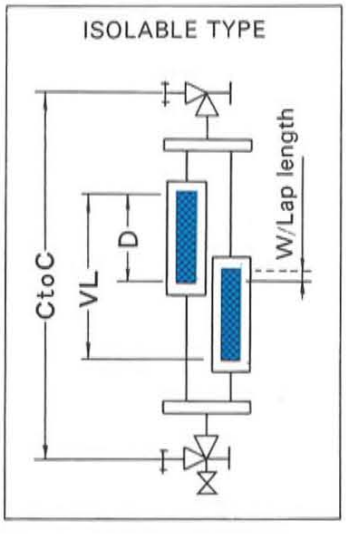

ALMAX-II FLAT GLASS FOR LIQUID LEVEL GAUGE

REFLEX & TRANSPARANT GLASSES for Seris 10, N20, 20, 30, 50, and 100

Dimension

Glass No.	Reflex	1R	2R	3R	4R	5R	6R	7R	8R
	Transparant	1T	2T	3T	4T	5T	6T	7T	8T
Length		190	200	220	250	280	300	320	340
Wide		34							
Thickness		17							

Material for all glasses to toughened Borosilicate glass and Alumax-11 glass.

ALMAX-II Transparent For High Press. & Temp.	
Glass No.	1T-100
Length	200
Wide	34
Thickness	22

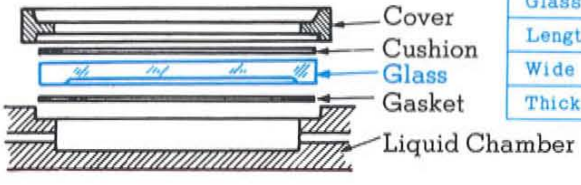

Almax-II Glass For High Pressure & High Temperature

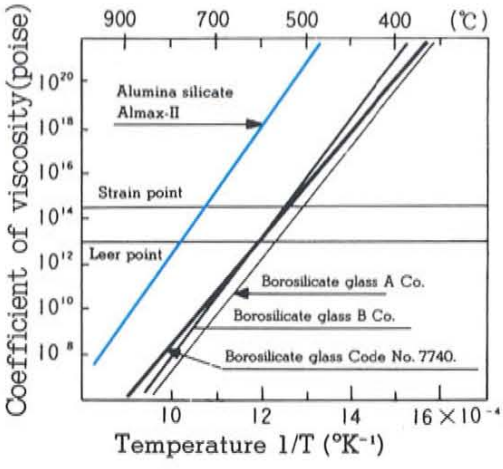

Series 10

ARMORED GAUGE

KANEKO

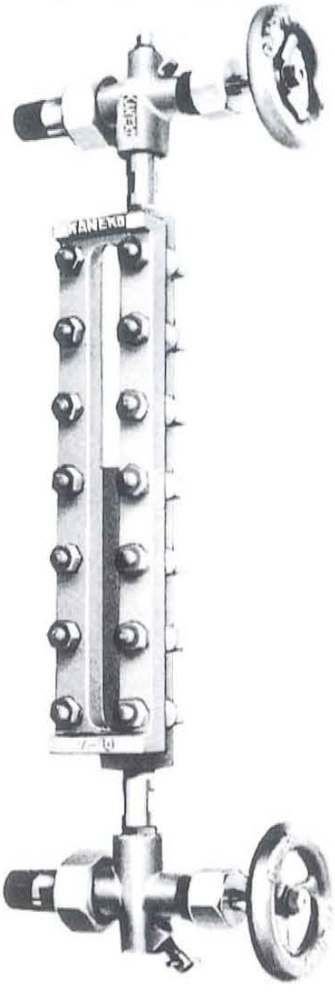

Reflex and Transparent both liquid level gauge are Called "armored gauge". These gauges are heavy-duty high pressure than more general purpose. Reflex gauge to use flat glass. The inner surface of glass has reflecting five grooves of prism. Liquid level shows black (Liquid's color) and empty space white reading. Transparent gauge to use transparency flat glass. These glass located both side of liquid chamber. See though liquid level. Mica or plastic shields are recommended for glasses when handling caustics, hydrofluoric acid, distilled water or other liquid corrosive to glass.

Series R-10

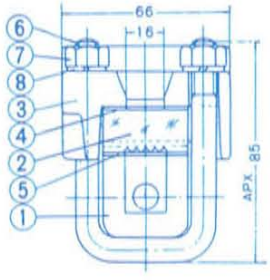

Series T-10

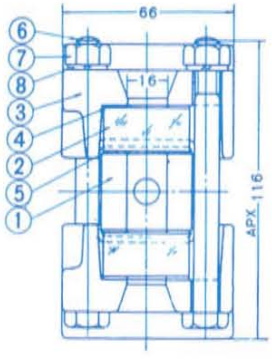

No	PARTS	STANDARD STEEL BODY	WETTED PARTS STAINLESS STEEL	
1	LIQUID CHAMBER	S25C	SUS304	SUS316
2	GLASS	Heat Resisting	Heat Resisting	Heat Resisting
3	COVER	FCD45	FCD45	FCD45
4	CUSHION	T # 1000	T # 1000	T # 1000
5	GASKET	T # 1000	V # 7010	V # 7010
6	BOLTS	SNB7	SNB7	SNB7
7	NUTS	S45C	S45C	S45C
8	SPRING WASHER	Spring steel	Spring steel	Spring steel

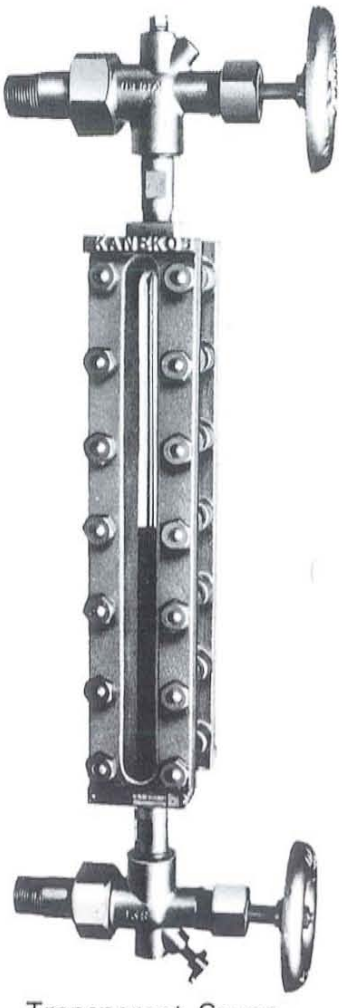

Reflex Gauge

Transparent Gauge

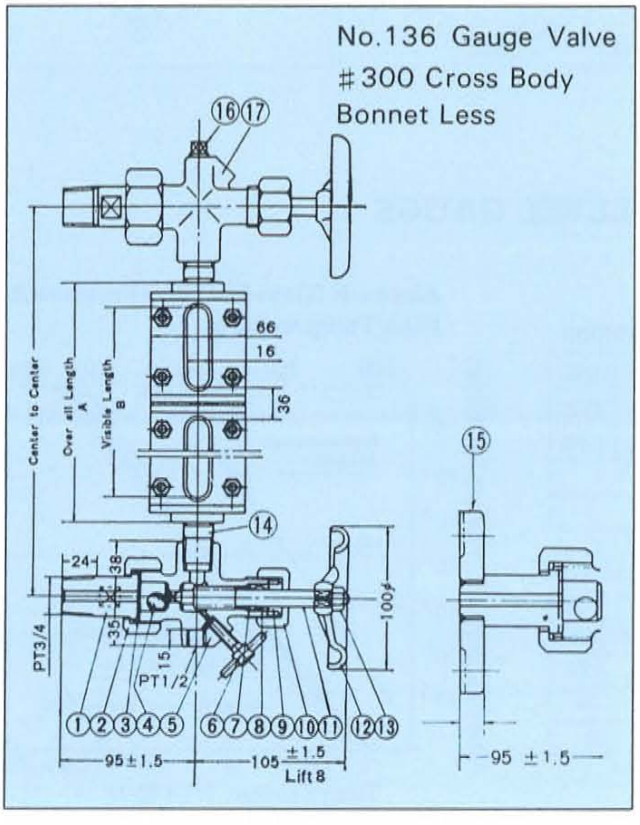

MODEL No. 136 GAUGE VALVE

No. 136 Gauge Valves are cross type body with drain valve and plug

SAFETY SHUT-OFF

Upper and under gauge valve body with stainless steel ball check for automatic shut-off in the event of rupture on the downstream side of the seat.

STANDARD CONNECTIONS

Vesel : 3/4" JIS male
Drain : 1/2" JIS female
Gauge : 1/2" JIS male

OPTIONAL CONNECTIONS

Vesel : 1/2" JIS or NPT male, 1/2" or 3/4" male for welding. Flanged to requirements.
Gauge : 1/2" female

No	#136 PARTS	Nool Unit	STANDARD STEEL Body	WETTED PARTS STAINLESS STEEL	
1	TAIL PIECE	2	S25C	SUS304	SUS316
2	TAIL PIECE NUT	2	SS41	SS41	SS41
3	GASKET	2	T # 1000	V # 7010	V # 7010
4	BALL CHECK	2	SUS304	SUS304	SUS316
5	VALVE BODY (1)	1	S25C	SUS304	SUS316
6	DRAIN VALVE	1 Set	SUS420J2	SUS304	SUS316
7	PACKING RING	2	SUS420J2	SUS304	SUS316
8	PACKING		V # 138	Valqua # 7137	VALQUA # 7137
9	PACKING GLAND	2	SS41	SUS304	SUS316
10	NUT FOR GLAND	2	SS41	SS41	SS41
11	STEM	2	SUS304	SUS304	SUS316
12	HAND WHEEL	2	FCMB	FCMB	FCMB
13	NUTS	2	SS41	SS41	SS41
14	CONNECTION	2	STPG38	SUS304	SUS304
15	FLANGE	2	S25C	SUS304	SUS316
16	PT 1/2 PLUG	1	SS41	SUS304	SUS316
17	VALVE BODY (2)	1	S25C	SUS304	SUS316

KANEKO ARMORED GAUGE

Series 20
Series N-20

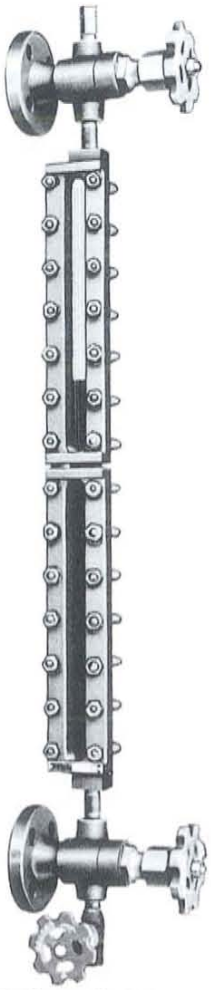

Reflex Gauge

Series 20, N20 construction and function are considerd to series 10, but durability for pressure than more heavy-duty high pressure. Standard construction includes a solid one-piece chamber machined from carbon steel with forged carbon steel covers.
Series 20, N-20 and 30 gauges are also available in a wide variety of materials to meet specific corrosive or extreme temperature conditions.

Series R-20

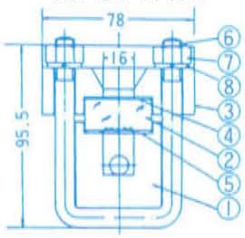

Series T-20

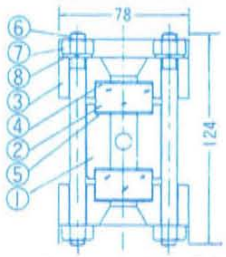

Series RN-20

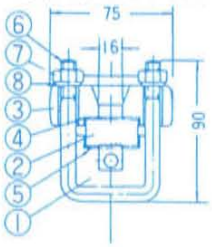

Series TN-20

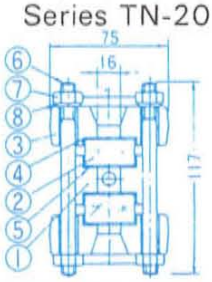

No	TYPE 20 PARTS	STANDARD STEEL BODY	WETTED PARTS STAINLESS STEEL	
1	LIQUID CHAMBER	S25C	SUS304	SUS316
2	GLASS	Alumina Silicate or Boro-silicate	Alumina Silicate or Boro-silicate	
3	Cover	S25C	S25C	S25C
4	CUSHION	T # 1000	T # 1000	T # 1000
5	GASKET	T # 1000	V # 7010	V # 7010
6	BOLTS	SNB7	SNB7	SNB7
7	NUTS	S45C	S45C	S45C
8	SPRING WASHER	SPRING STEEL	SPRING STEEL	SPRING STEEL
9	SIDE PACKING	ASBESTOS	ASBESTOS	ASBESTOS

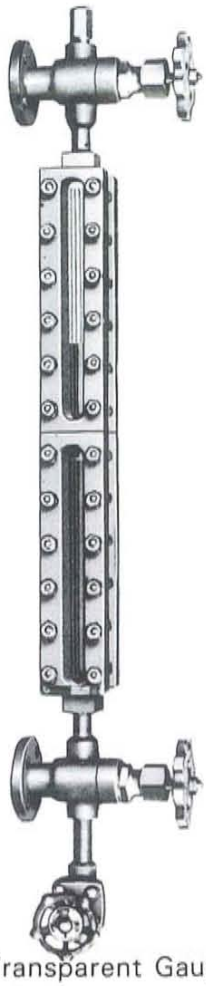

Transparent Gauge

Model No. 4 Gauge Valve

1. Valve bodys construction are off-set, distance 20 mm between valve center and Gauge center.
2. Safety shut-off with stainless steel ball check.
3. Quick closing and opening stem with Hand wheel (or lever single or double option)
4. With drain valve and plug.

PRESSURE RATINGS AT 40°C

	REFLEX, TRANSPARENT			
SeriesN20,20	50kgf/cm²	(5Mpa)	700psl
Series30	70	〃	(7Mpa)	995psl
Series50	100	〃	(10Mpa)	1422psl
Series100	150	〃	(15Mpa)	2133psl

NO.	#4 PARTS	Nool Unit	STANDARD STEEL BODY	LIQUID CONTACT STAINLESS STEEL	
1	FLANGE	2	S25C	SUS304	SUS316
2	RETEINER	2	SUS304	SUS304	SUS316
3	BALL CHECK	2	SUS 304	SUS 304	SUS316
4	SEAT	2	SUS 304	SUS304	SUS316
5	BODY	2	S25C	SUS304	SUS316
6	PLUG	1	S45C	SUS304	SUS316
7	STEM	2	SUS 304	SUS304	SUS316
8	BONNET	2	S45C	SUS304	SUS316
9	GASKET	2	SUS 304	SUS304	SUS316
10	PACKING RING	2	SUS420J2	SUS304	SUS316
11	GLAND PACKING		T#2800-600	T #9075	T #9075
12	GLAND	2	SUS 304	SUS304	SUS316
13	GLAND NUT	2	SS 41	SS41	SUS316
14	HANDLE	2	FCMB 28	FCMB 28	FCMB28
15	WASHER	2	SS 41	SS41	SS41
16	NUT	2	SUS 304	SUS304	SUS304
17	CONNECTION	2	STS38	SUS304	SUS316
18	DRAIN VALVE	1 Set	BODY S25C TRIM SUS304	SUS304	SUS316

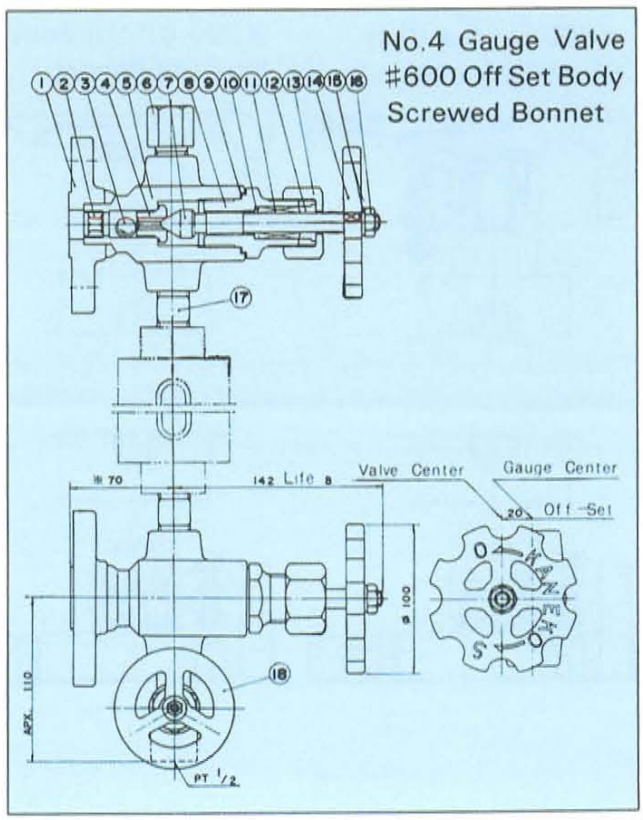

No.4A,No.4AU and No.4U

GAUGE VALVE

KANEKO

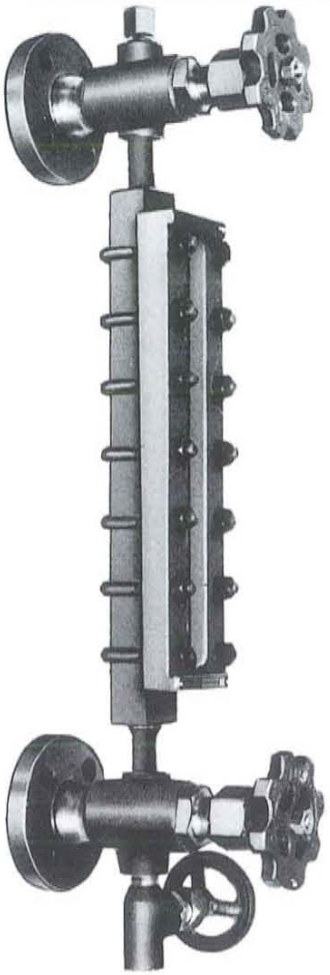

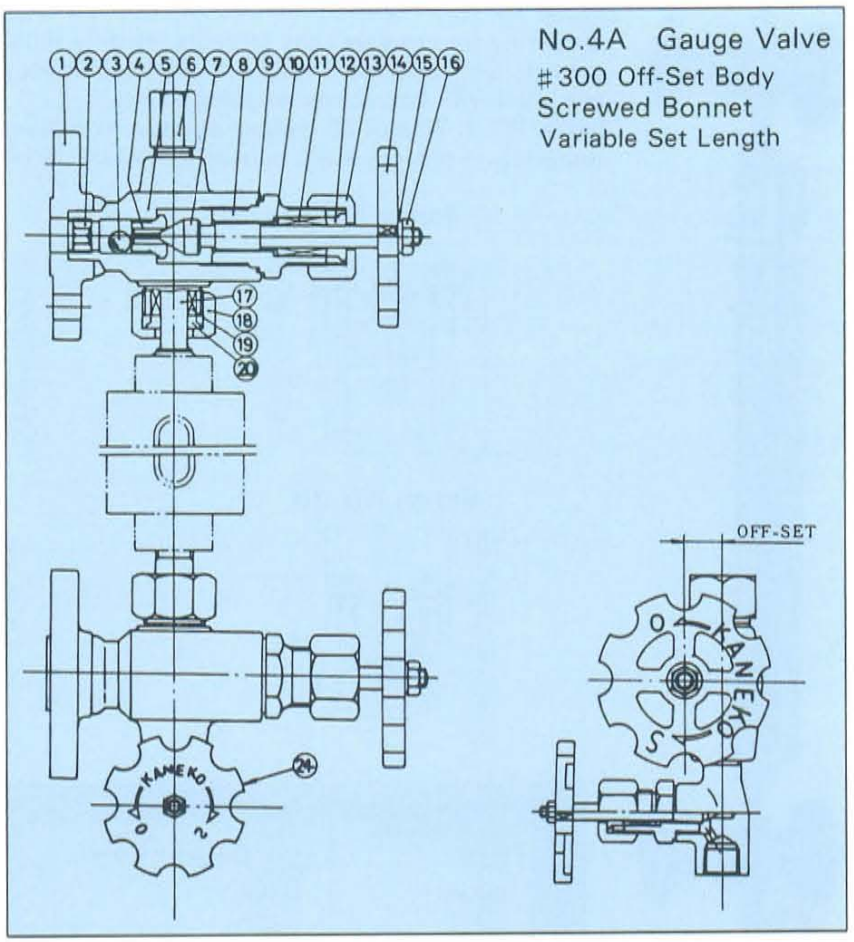

No.4A Gauge Valve
#300 Off-Set Body
Screwed Bonnet
Variable Set Length

No.4AU Gauge Valve
#300 Off-Set Body
Screwed Bonnet

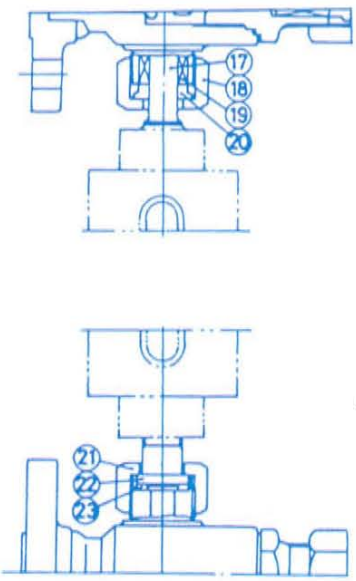

No.4U Gauge Valve
#300 Off-Set Body
Screwed Bonnet

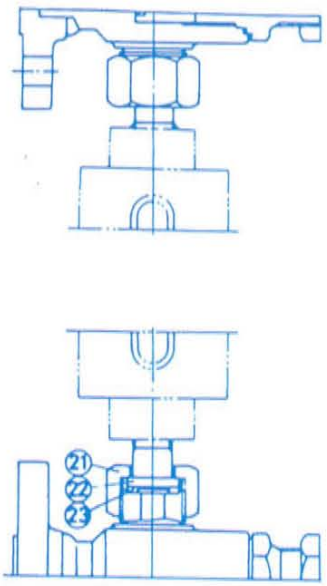

P. No.	PARTS	No. of Unit	STANDARD STEEL BODY	WETTED PARTS STAINLESS STEEL	
1	FLANGE	2	S25C	SUS304	SUS316
2	RETAINER	2	SUS304	SUS304	SUS316
3	BALL CHECK	2	SUS304	SUS304	SUS316
4	SEAT	2	SUS304	SUS304	SUS316
5	BODY	2	S25C	SUS304	SUS316
6	PLUG	1	S45C	SUS304	SUS316
7	STEM	2	SUS304	SUS304	SUS316
8	BONNET	2	S45C	SUS304	SUS316
9	GASKET	2	SUS304	SUS304	SUS316
10	PACKING RING	2	SUS420J2	SUS304	SUS316
11	GLAND PACKING		T#2800-600	T#9075	T#9075
12	GLAND	2	SUS304	SUS304	SUS316
13	GLAND NUT	2	SS41	SS41	SUS316
14	HAND WHEEL	2		FCMB28	
15	WASHER	2		SS41	
16	NUT	2	SUS304	SUS304	SUS316
17	CONNECTION PIPE	2	STS38	SUS304	SUS316
18	GLAND NUT		S45C	SS41	SS41
19	GLAND PACKING		T#2800-400	T#9075	T#9075
20	GLAND		SUS304	SUS304	SUS316
21	CONNECTION NUT	2	S45C	S45C	S45C
22	CONNECTION PIPE	2	STS38	SUS304	SUS316
23	GASKET	2	T#1804	V#7010	V#7010
24	DRAIN VALVE	1Sets	S25C	SUS304	SUS316

KANEKO GAUGE VALVE

No.4Y,No.4H

No.4Y Gauge Valve
#600 Off-Set Body
Screwed Bonnet With Yoke

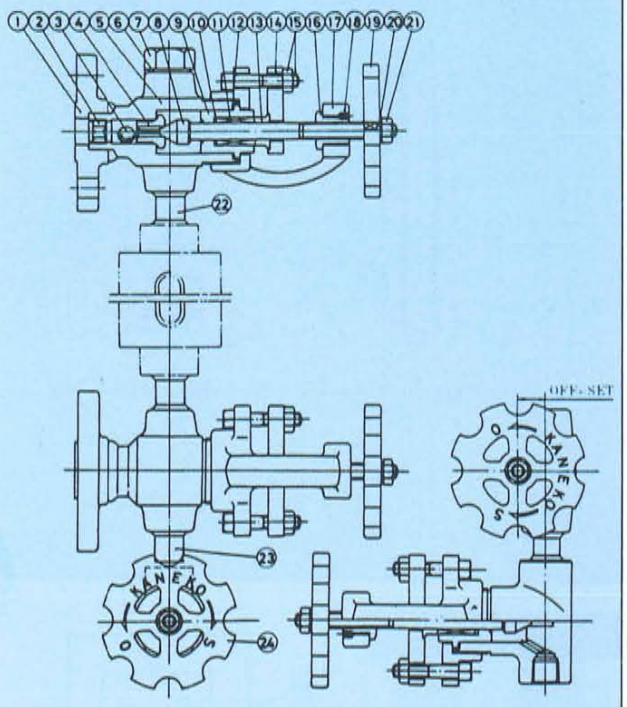

P. No.	PARTS	No. of Unit.	STANDARD STEEL BODY	WETTED PARTS STAINLESS STEEL	
1	FLANGE	2	S25C	SUS304	SUS316
2	RETAINER	2	SUS304	SUS304	SUS316
3	BALL CHECK	2	SUS304	SUS304	SUS316
4	SEAT	2	SUS304	SUS304	SUS316
5	BODY	2	S25C	SUS304	SUS316
6	GASKET	2	T#1804	SUS304	SUS316
7	PLUG	1	S45C	SUS304	SUS316
8	STEM	2	SUS304	SUS304	SUS316
9	BONNET	2	S45C	SUS304	SUS316
10	PACKING RING	2	SUS420J2	SUS304	SUS316
11	GLAND PACKING	2	T#2800-600	T#9075	T#9075
12	GASKET	2	SUS304	SUS304	SUS316
13	GLAND	2	SUS304	SUS304	SUS316
14	GLAND FLANGE	2	SS41	SS41	SS41
15	BOLT NUT	4	SS41	SS41	SS41
16	SLEEVE	2	SUS420J2	SUS420J2	SUS420J2
17	YOKE COVER	2	S25C	S25C	S25C
18	SET SCREW	2	SS41	SS41	SS41
19	HAND WHEEL	2	FCMB28	FCMB28	FCMB28
20	WASHER	2	SS41	SS41	SS41
21	NUT	2	SUS304	SUS304	SUS304
22	CONNECTION PIPE	2	STS38	SUS304	SUS304
23	CONNECTION PIPE	2	STS38	SUS304	SUS304
24	DRAIN VALVE	1Sets	Body S25C Trim SUS304	SUS304	SUS304

No.4H Gauge Valve
#600 Off-Set Body Union Bonnet

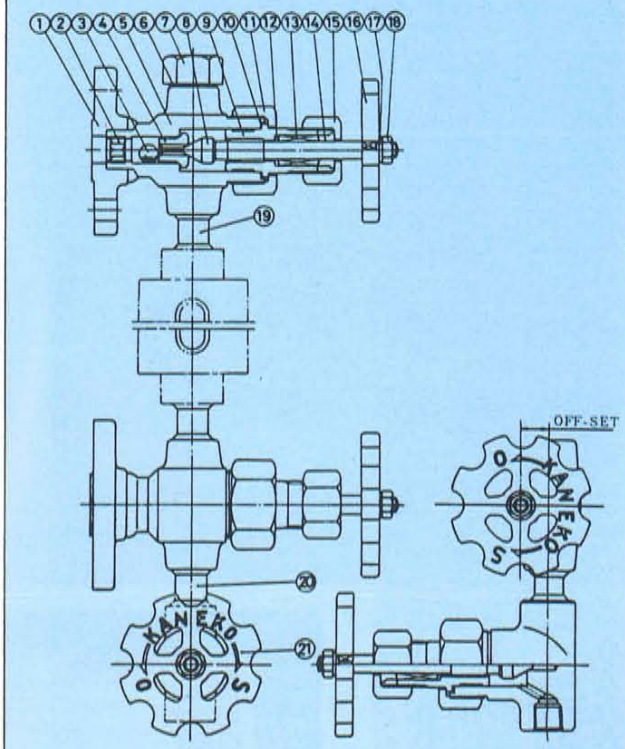

P. No.	PARTS	No. of Unit.	STANDARD STEEL BODY	WETTED PARTS STAINLESS STEEL	
1	FLANGE	2	S25C	SUS304	SUS316
2	RETAINER	2	SUS304	SUS304	SUS316
3	BALL CHECK	2	SUS304	SUS304	SUS316
4	SEAT	2	SUS304	SUS304	SUS316
5	BODY	2	S25C	SUS304	SUS316
6	GASKET	2	T#1804	SUS304	SUS316
7	PLUG	1	S45C	SUS304	SUS316
8	STEM	2	SUS304	SUS304	SUS316
9	BONNET	2	S45C	SUS304	SUS316
10	GASKET	2	SUS304	SUS304	SUS316
11	BONNET NUT	2	S45C	S45C	S45C
12	PACKING RING	2	SUS420J2	SUS304	SUS316
13	GLAND PACKING		T#2800-600	T#9075	T#9075
14	GLAND	2	SUS304	SUS304	SUS316
15	GLAND NUT	2	S45C	S45C	S45C
16	HAND WHEEL	2	FCMB28	FCMB28	FCMB28
17	WASHER	2	SS41	SS41	SS41
18	NUT	2	SUS304	SUS304	SUS304
19	CONNECTION PIPE	2	STS38	SUS304	SUS316
20	CONNECTION PIPE	2	STS38	SUS304	SUS316
21	DRAIN VALVE	1	Body S25C Trim SUS304	SUS304	SUS316

ARMORED GAUGE

KANEKO

Liquid Level Gauge
Reflex Jacketed Type N-20

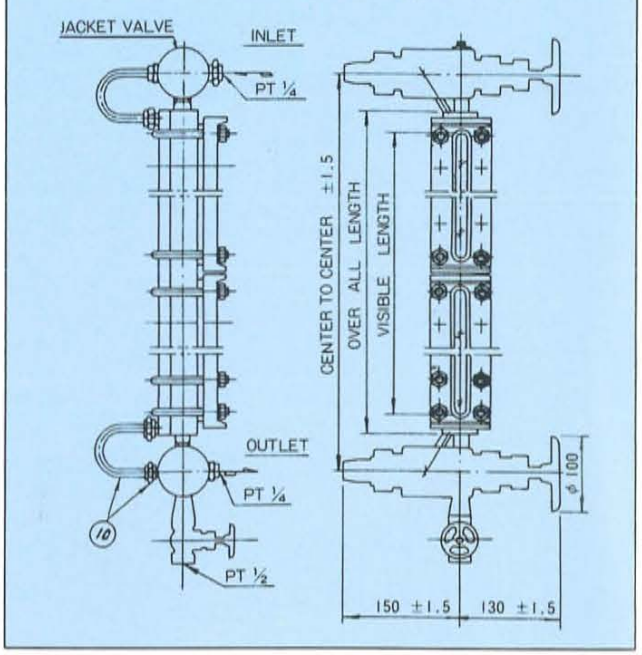

Liquid Level Gauge
Transparent Jacketed Type

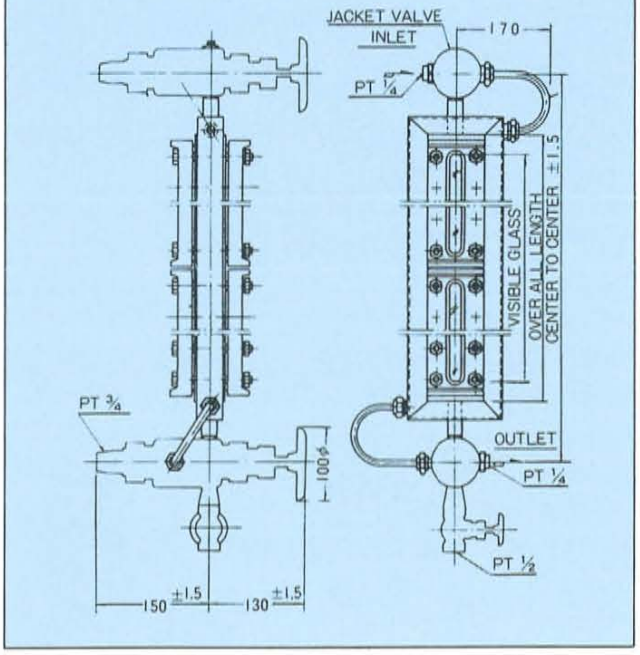

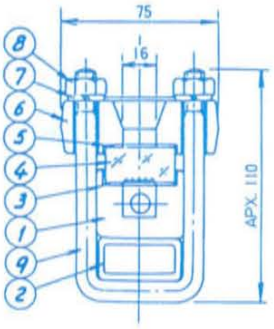

No.	PARTS	STANDARD STEEL BODY	WETTED PARTS STAINLESS STEEL	
1	LIQUID CHAMBER	S25C	SUS304	SUS304
2	JACKET	STPG38	STPG38	STPG38
3	GASKET	T # 1000	V # 7010	V # 7010
4	GLASS	HEAT RESISTING		
5	CUSHION	T # 1000		
6	COVER	S25C		
7	SPRING WASHER	SPRING STEEL		
8	NUT	S45C		
9	BOLT	SNB7		
10	PIPING	SUS + 304S35C		

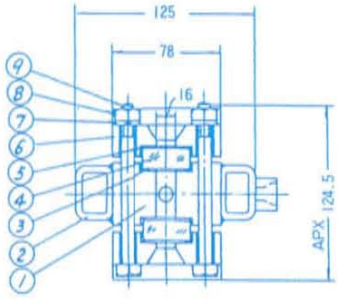

NON-FROSTING LIQUID LEVEI GAUGE.

NON-FROSTING LIQUID LEVEL GAUGE: is used for protection from the frost. Reflex type & Transparent type are provided Material, application method, gauge valve are entirely same to general use. (Page 3) Generally, for low temperature liquid to be used for refrigerator, the whole surface of liquid level body & cover are frosted, general liquid level gauge is covered with heavy frost and glass surface is entirely invisible. For the sake of this, non-frosting liquid level gauge is provided with Methacrylate transparent plate which has high level. So this crosses frosting strata or keeping cool materials, is easily visible the liquid level position clearly. H dimension of left table, please designate applicable for working temperature or thickness of keeping cool materials.

APLICATION:
Series RF-N20, TF-N20
Series RF-20, TF-20

H					
76	102	127	152	178	203

Series RCF-20, TCF-20

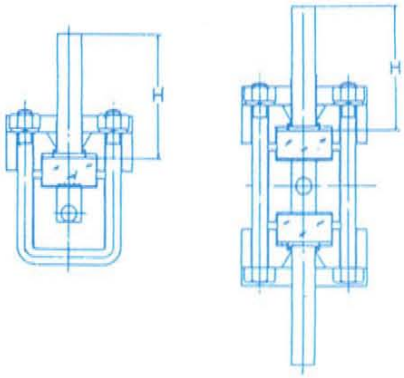

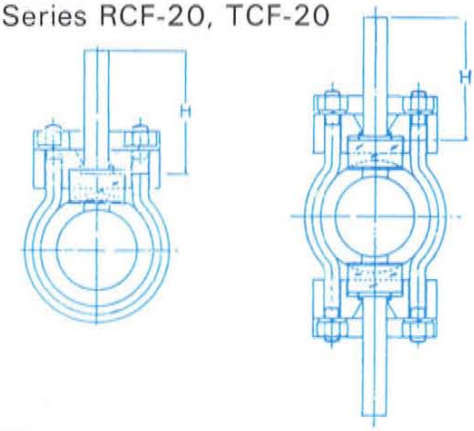

KANEKO LARGE CHAMBER GAUGE

Series RC, TC-20
Series RC, TC-30

SPECIFICATIONS

■**Chamber Inside Dia:**
ϕ45 for 20 Series
ϕ36 for 30 Series

■**Visible Length:** 171 to 1392mm(Max.)
Refer to Page4

■**Minimam Temperature** -100°C

■**Center to Center Length:**
C to C of One Section =VL +244
C to C of Two Section =VL +242
C to C of Three Section =VL +245
C to C of Four Section =VL +248

■**Recommenbeb Mebia:**
Liquid Ethylene,LPG and Low boiling or High viscosity Liquids.

OPTION

(1) Non-Flosting Plate of Methacrylate.
(2) Long Bonnet Ga ge Valve 2" Flanged Vessel connection JIS. ANSI.
(3) Emergency Sh t-off Valve.

■**Gauge Valve Model No.186CLBBY**

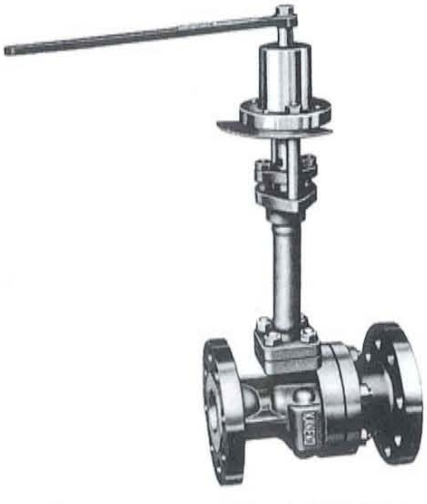

Emergency Shut-Off Valve

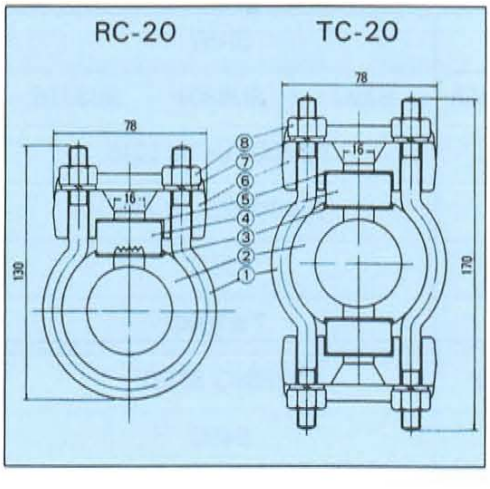

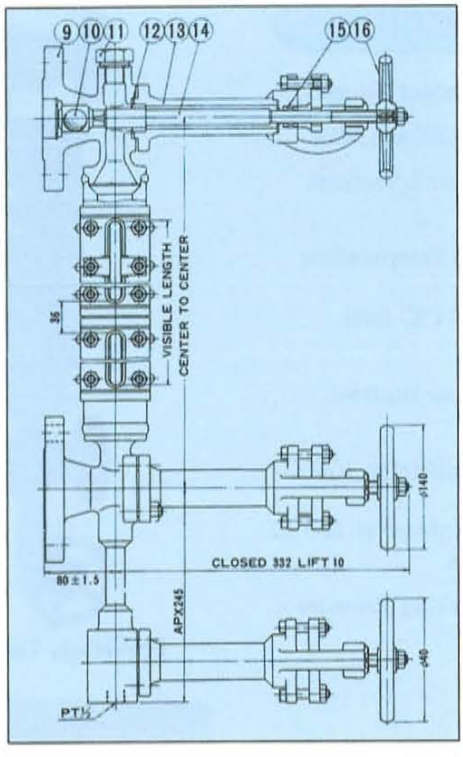

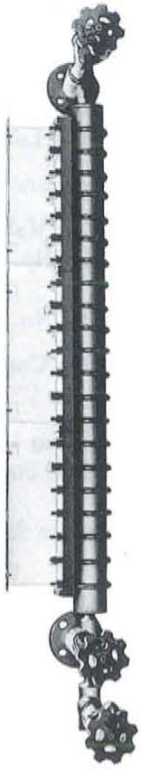

Series 20 & 30 MATERIAL

No.	PARTS	CARBON STEEL BODY	WETTED PARTS STAINLESS STEEL	
1	BOLT	SNB7	SNB7	
2	LIQUID CHAMBER	CARBON STEEL	5R10	5R60
3	GASKET	T#1000	T#1000 or TEFLON	
4	GLASS	TEMPERED GLASS		
5	CUSHION	T#1000	T#1000	
6	COVER	S25C	S25C	
7	SPRING WASHER	SPRING STEEL		
8	NUT	S45C	S45C	
9	VALVE BODY	SCPH2	SCS13	SCS14
10	BALL CHECK	SUS304	SUS304	SUS316
11	PLUG	SUS304	SUS304	SUS316
12	DISK	SUS304	SUS304	SUS316
13	LONG BONNET	SCPH2	SCS13	SCS14
14	STEM	SUS304	SUS304	SUS316
15	GLAND PACKING	T#2800-600	T#9075 or TEFLON	
16	HAND WHEEL	FCMB28		

REFLEX & TRANSPARENT GAUGE KANEKO

SPECIFICATIONS

- **Type:** Reflex and Transparent Gauge.
- **Visible Length:** 171 to 1392mm Max.
- **Maximam No. of Section:** 5 Sections.
- **Gauge Valve:**
  Model No. 4H for Normal Temperature fluid.
  Model No. 4Y for over 211°C fluid.
- **Vessle Connection:**
  3/4" or 1" Flanged by your riquired.
- **Working Pressure:**
  Corbon Steel body: 70kgf/cm² at 100°C Max.
  Stainless Steel body: 56kgf/cm² at 100°C Max.
- **Shell test Pressure:** Working Pressure × 1.5

For High Temperature

For Normal Temperature

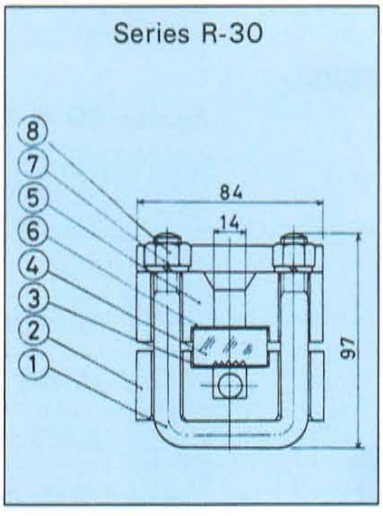

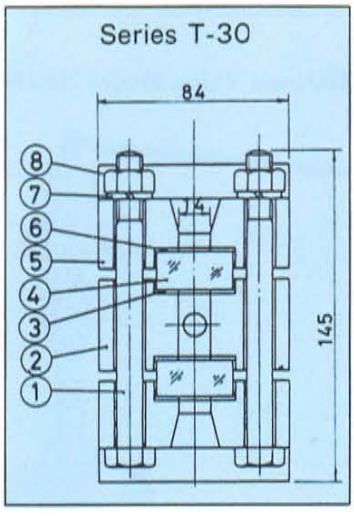

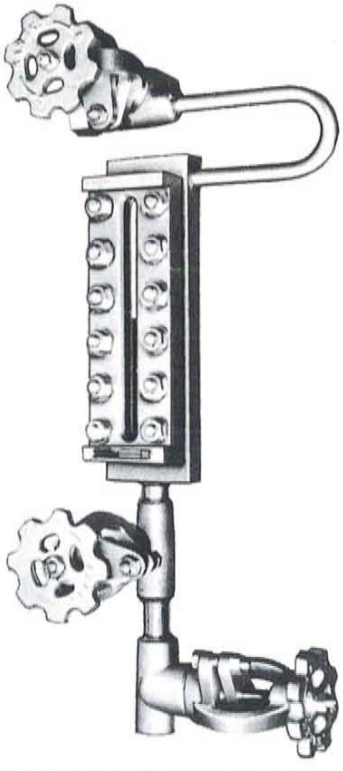

U Type pipe connection
For High Temperature

Series 30 MATERIALS

No.	PARTS	CS BODY	WETTED PARTS STAINLESS STEEL	
1	BOLTS	SNB7		
2	LIQUID CHAMBER	S25C	SUS304	SUS316
3	GASKET	T#1000 or T#1215		
4	GLASS	TEMPERED GLASS		
5	COVER	S25C		
6	CUSION	T#1000		
7	SPRING WASHER	SPRING STEEL		
8	NUT	S45C		

SPECIFICATIONS

- **Type:** Reflex and Transparent Gauge.
- **Visible Length:** 171 to 1392mm Max.
- **Maximam No. of Section:** 5 Sections.
- **Gauge Valve:**
  Model No. 4H for Normal Temperature fluid.
  Model No. 4Y for Over 211°C fluid.
- **Vessle Connection:**
  3/4" or 1" Flanged by your riquired.
- **Working Pressure:**
  Corbon Steel body: 100kgf/cm² at 40°C Max.
  Stainless Steel body: 80kgf/cm² at 100°C Max.
- **Shell test Pressure:** 200kgf/cm²

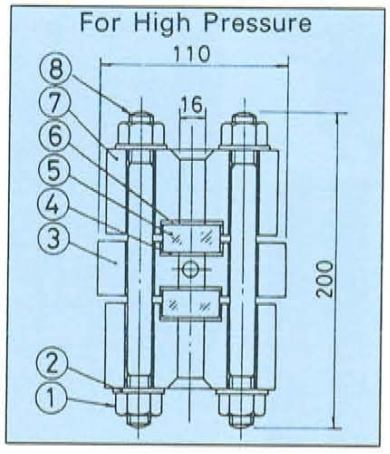

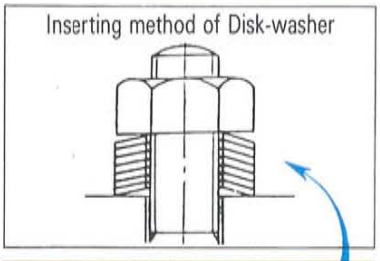

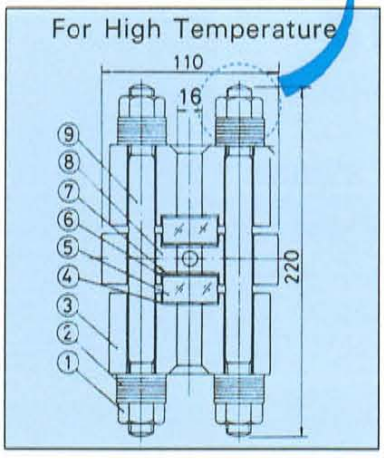

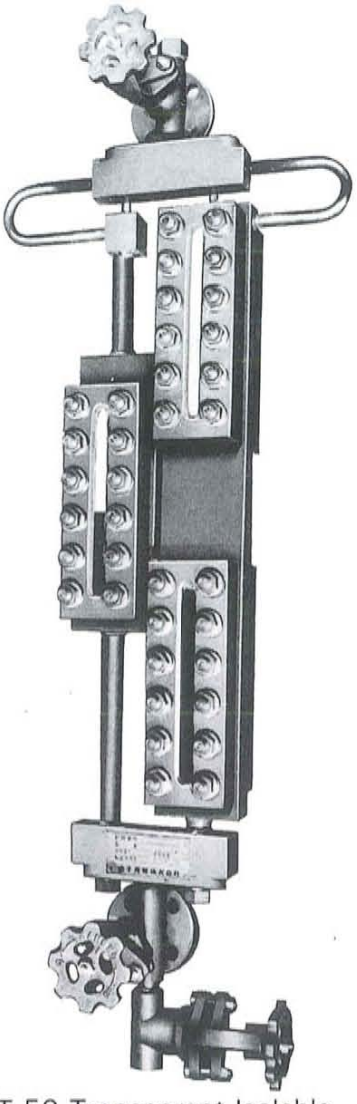

T-50 Transparent Isolable Type

FOR HIGH TEMPERATURE SERIES 50 MATERIAL LIST

No.	PARTS	CS BODY	WETTED STAINLESS STEEL	
1	NUT	S45C	S45C	
2	DISK WASHER	SUS304	SUS304	
3	COVER	S45C	S45C	
4	CUSHION GASKET	T#1000	T#1000	
5	GLASS	ALMAX II	ALMAX II	
6	MICA	MICA	MICA	
7	GASKET	T#1215	T#1215	
8	CHAMBER	S25C	SUS304	SUS316
9	BOLT	SNB7	SNB7	

FOR HIGH PRESSURE SERIES 50 MATERIAL LIST

No.	PARTS	CS BODY	WETTED STAINLESS STEEL	
1	NUT	S45C	S45C	
2	WASHER	SUS304	SUS304	
3	CHAMBER	S25C	SUS304	SUS316
4	GASKET	T#1215	T#1215	
5	GLASS	ALMAX II	ALMAX II	
6	CUSHION GASKET	T#1000	T#1000	
7	COVER	S45C	S45C	
8	BOLT	SNB7	SNB7	

(Note) Except above Material Please Consult to us

SPECIFICATIONS

- **Type:** Transparent Gauge.
- **Visible Length:** Refer to Page 4.
- **Maximam No. of Section:** Four Sections.
- **Gauge Valve:** Model No. PS4.
- **Vessle Connection:**
  3/4" or 1" Flanged ANS1 1500.
- **Working Pressure:**
  Corbon Steel body: 200kgf/cm² at 40°C
  : 150kgf/cm² at 400°C
  Shell test Pressure: 300kgf/cm²

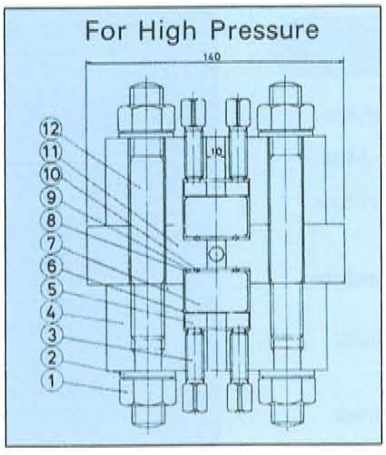

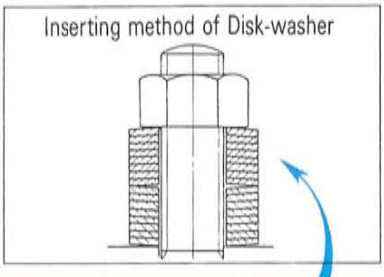

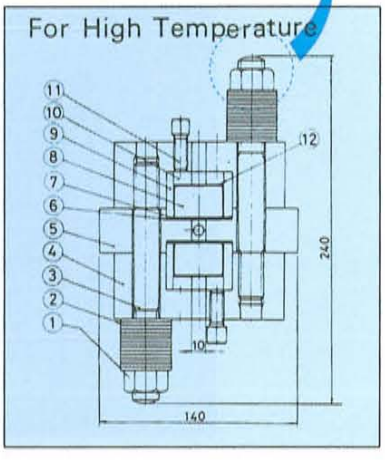

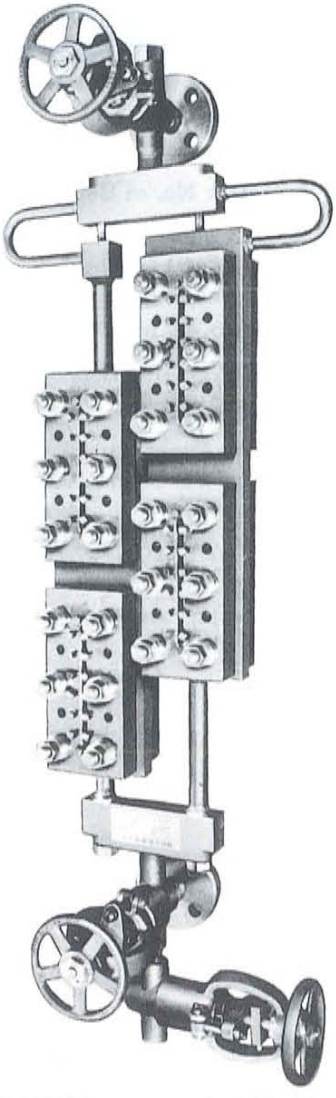

T-100 Transparent Isolable Type

FOR HIGH TEMPERATURE MATERIAL

No.	PARTS	CS BODY	WETTED PARTS STAINLESS STEEL	
1	NUT	S45C	S45C	
2	DISK WASHER	SUS304	SUS304	
3	BOLT	SNB7	SNB7	
4	COVER	S45C	S45C	
5	CHAMBER	S25C	SUS304	SUS316
6	GASKET	T#1215	T#1215	
7	MICA	MICA	MICA	
8	GLASS	ALMAX II	ALMAX II	
9	GLASS GUIDE	SS41	SS41	
10	GLASS RETAINER	S45C	S45C	
11	SQUARE SET SCREW	SNB7	SNB7	
12	CUSHION GASKET	T#1000	T#1000	

FOR HIGH PRESSURE MATERIAL

No.	PARTS	CS BODY	WETTED PARTS STAINLESS STEEL	
1	NUT	S45C	S45C	
2	WASHER	SUS304	SUS304	
3	SQUARE SET SCREW	SNB7	SNB7	
4	COVER	S45C	S45C	
5	GLASS RETAINER	S25C	SUS304	
6	CUSHION	T#1000	T#1000	
7	GLASS	ALMAX II	ALMAX II	
8	BACK UP CUSHION	TEFLON	TEFLON	
9	BACK UP	SUS304	SUS304	SUS316
10	SEAL RING	T#9200V	T#9200V	
11	CHAMBER	S25C	SUS304	SUS316
12	BOLT	SNB7	SNB7	

KANEKO HEAVY DUTY HIGH PRESSURE LIQUID LEVEL GAUGE

Series S-100

SPECIFICATIONS

■**Type:** Tramsparent Gauge TS100 Series.

■**Working Pressure:**
Carbon Steel Body: 500kgf/cm² at 40°C
320kgf/cm² at 200°C
Stainless Steel Body: 320kgf/cm² at 40°C
250kgf/cm² at 200°C

■**Shell test:**
Carbon Steel Body: 480kgf/cm²
Stainless Steel Body: 375kgf/cm²

■**Working Temperatue:** 200°C (Max.)

■**Glass:** ALMAX II

■With Companion Flanges, Bots, Nut's and Metal Packings.

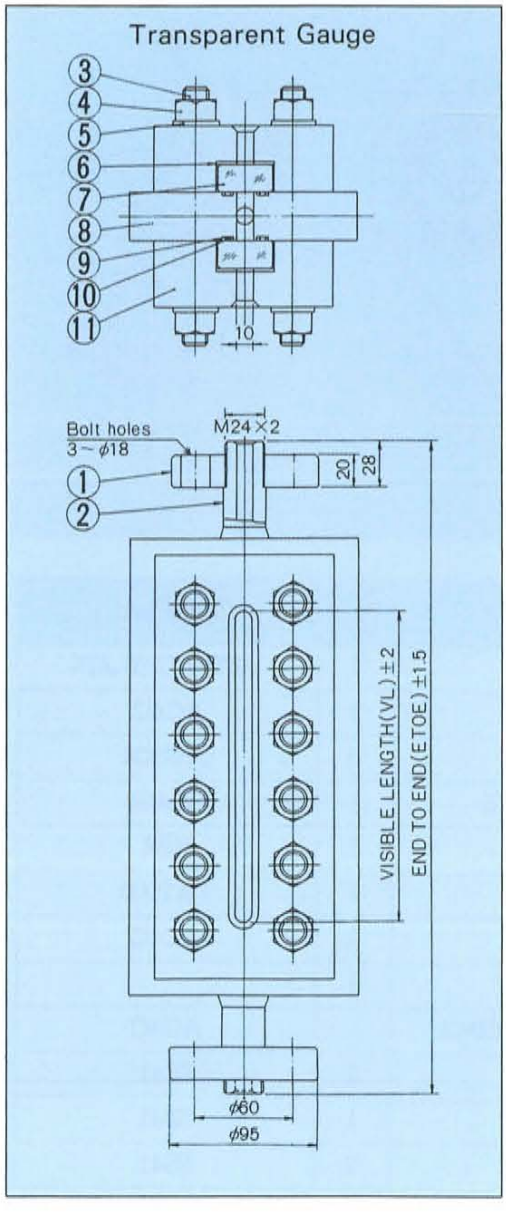

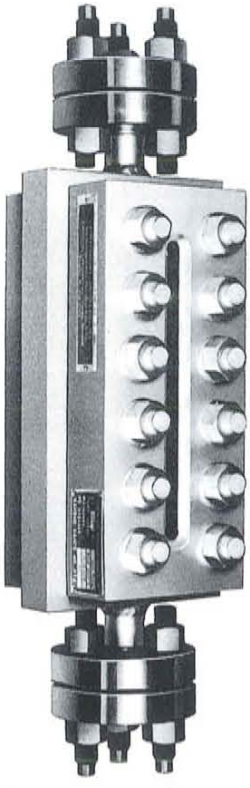

Transparent Gauge

HEAVY DUTY SERIES S-100 HIGH PRESSURE

MODEL No.	VL	E to E	WEIGHTS
1×1 T-S100	160	370	27
1×2 T-S100	170	380	29
1×3 T-S100	190	400	32
1×4 T-S100	220	430	36

No.	PARTS	CS Body	WETED PARTS	
			SUS304	SUS316
1	FLANGE	S45C		
2	CONNECTION PIPE	STS38	SUS304	SUS316
3	BOLT	SNB7		
4	NUT	S45C		
5	WASHER	SUS304		
6	CUSHION	A5052		
7	GLASS	ALMAX II		
8	LIQUID CHAMBER	S25C	SUS304	SUS316
9	BACK UP	PTFE		
10	GASKET	VITON		
11	COVER	S50C		

EXPLOSION-PROOF TYPE

ILLUMINATOR

KANEKO

Illuminator Explosion-Proof
JIS•d2G4

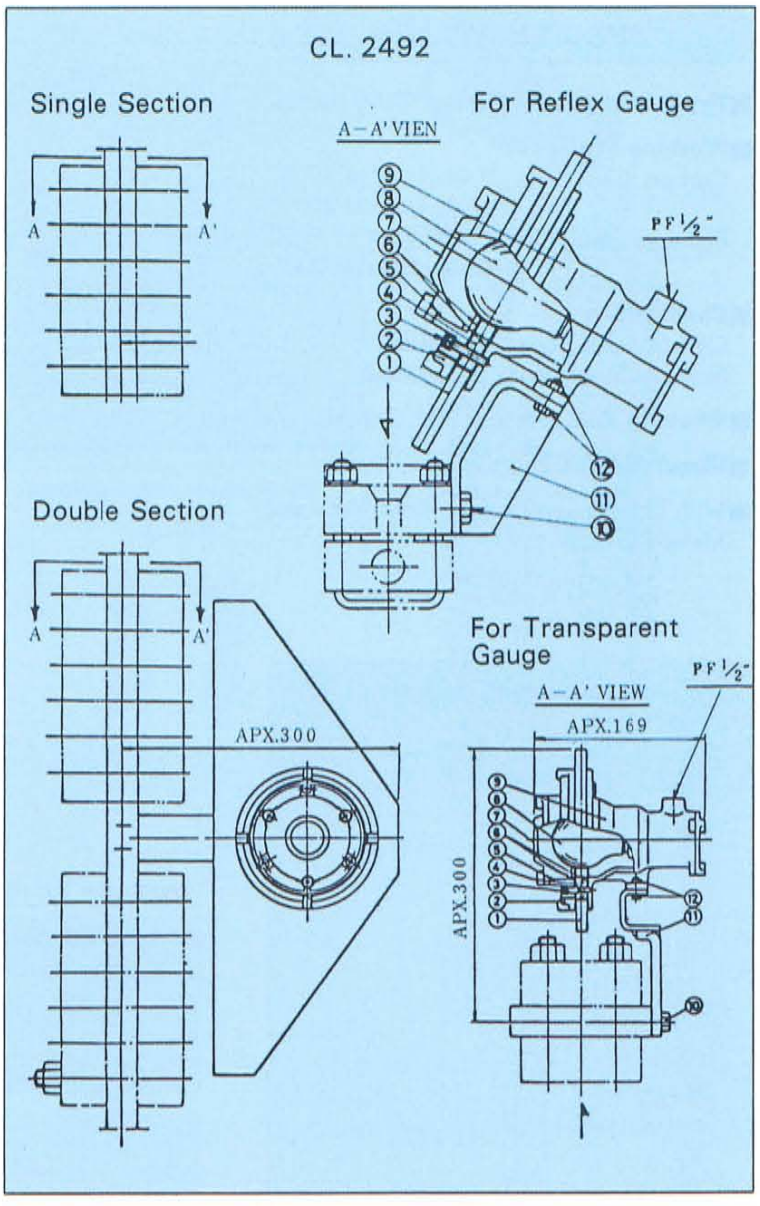

SPECIFICATIONS

ELECTRICITY

■**Voltage:** 100~240V
: 50, 60Hz

■**Bulb Light:** 20W

■**Explosion-proof:** d2G4.

■**Approved by JLM:** Roken No. 15628.

■**Aprications:**
Complete Range of Size; Single and Double Section Kaneko Explosion-proof Illuminators are made in Single and Double Section styles for Series N20, 20, 30, 50, 100 and S100 Transparent and Reflex Gauges. Double Section illuminators require only one bulb for complete illumination of two gauge sections.

No.	PARTS	No. of UNIT	MATERIAL
1	REFLECTAR	1	METHACRYLATE
2	COVER	1	AC4C
3	BOLT	3	SUS304
4	GLASS PLATE	1	GLASS
5	"O" RING	1	NBR
6	GASKET	1	T#1000
7	COVER	1	AC4C
8	BULB LIGHT	1	
9	LIGHT HOUSING		AC4C
10	BOLT	2	SS41
11	HOLDER	1	SS41
12	BOLT NUT	2	SS41

KANEKO ILLUMINATOR

OPTICAL TYPE

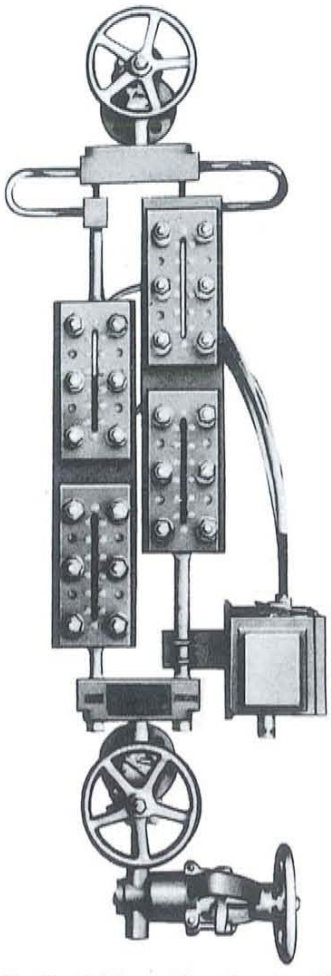

Optical Fiber Illuminator for Transparent Gauge

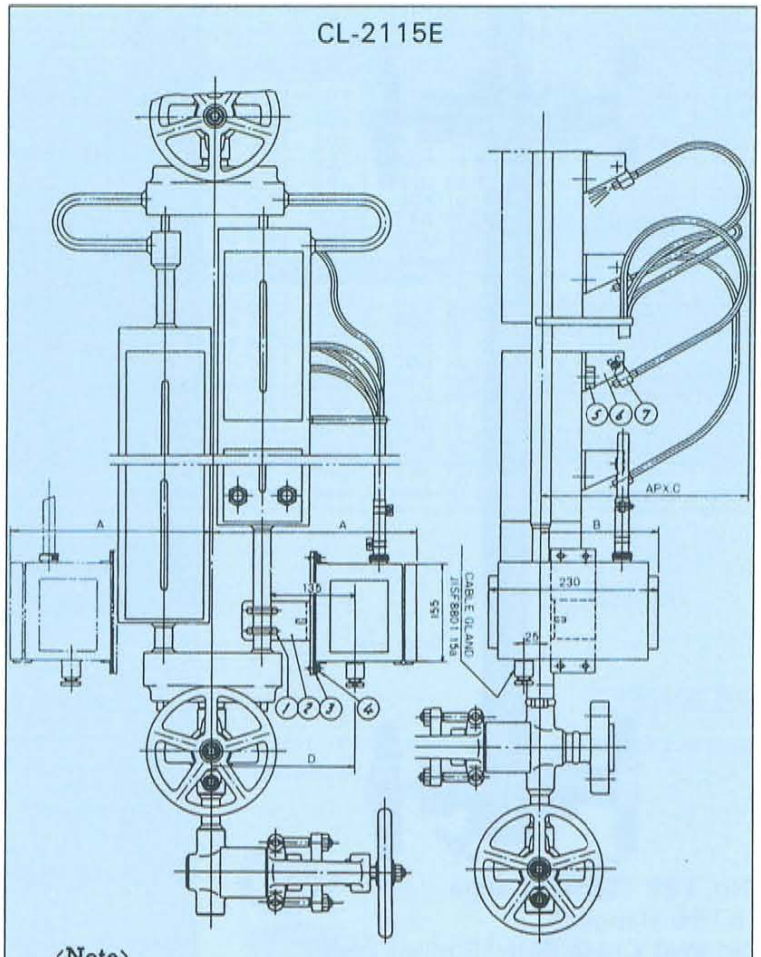

〈Note〉
This figure shows that Illuminator is mouted on a type 100 Liquid Level Gauge.

SPECIFICATIONS

ELECTRICITY

- **Model:** Optical Fiber type.
- **Voltage:** 100~220V 50/60Hz
- **Bulb Light:** 5V, 3A
- **Illminator Body:** Rain-proof type.

APPRICATION

Complete Range of Size: Single to Fourth Section, Maximum, Four Nozzle can take out from one Illuminator. Section styles for series N20, 30, 50, 100 and S100 Transparent Gauges. Four Section illuminators require only one bulb for complete illumination of Four gauge sections.

SRIES	A	B	C	D
N20	290	177	280	195
30	290	177	320	195
50	300	180	350	205
100	315	180	300	220

No.	PARTS	No. of UNIT	MATERIALS
1	U BOLT and NUT	2	SS41
2	MOUNTING PLATE	1	SS41
3	HEAT PROTECTOR	2	T # 1000
4	BOLT	4	SS41
5	BOLT		SS41
6	FITTING		SS41
7	FIBER HOLDER		C3604
8	ILLUMINATOR BODY	1 Set.	
9	FIBER PROTECTOR	1	BsT
10	FLEXIBLE TUBE	1~4	TCUW
11	NOZZLE	1~4	C3604

Series No.133

TUBELAR GAUGE KANEKO

No. 133 Tubelar Gauge
#150 Flanged,
Screwd Cross Body·Bonnet Less.

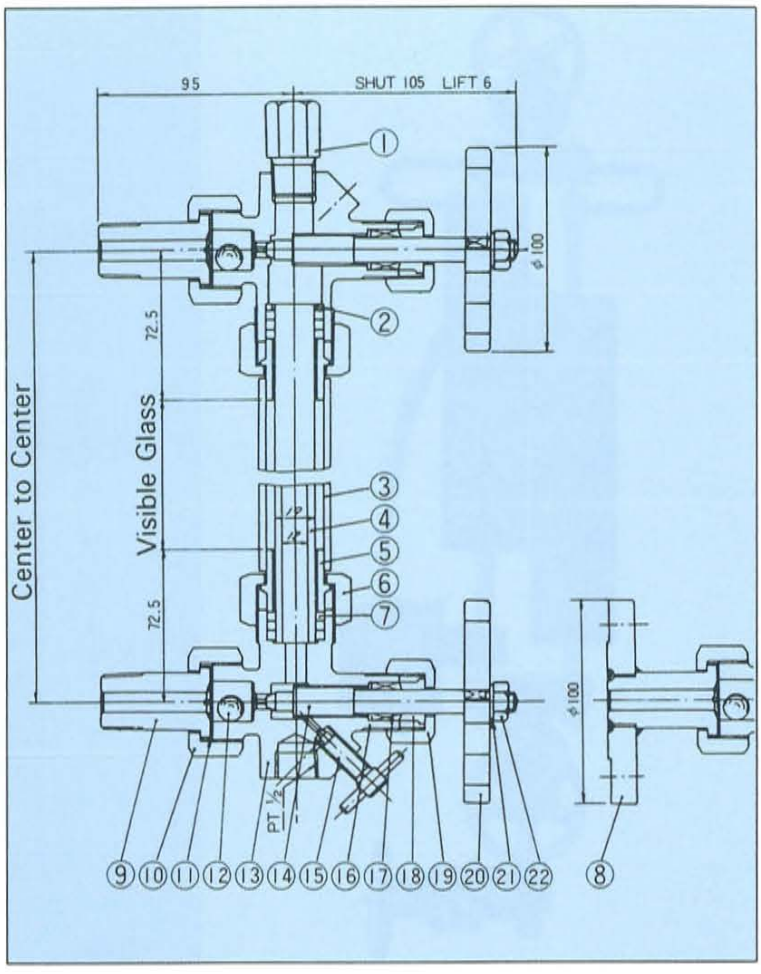

SPECIFICATIONS

SAFETY SHUT-OFF

Upper and under gauge valve body with stainless steel ball check for automatic shut-off in the event of rupturs on the downstream side of the Seat.

- Working Pressure: 10kgf/cm² (Max)
- Working Temperature: 70°C (Max)
- Shell Test Pressure: 15 kgf/cm²

STANDARD CONNECTIONS

- **Vesel:** 3/4" JIS male
- **Drain:** 1/2" JIS female

OPTIONAL CONNECTIONS

- **Vesel:** 1/2" JIS or NPT male
  : 1/2" or 3/4" male for welding.
  : Flanged to requirements.
- **Center to Center rating:** 300～1500mm
- **Visible Glass:** C to C minus 145mm
- **Glass Length:** C to C minus 55mm

No.	PARTS	CABON STEEL BODY	WETTED PARTS STAINLESS STEEL	
1	PLUG	S45C	SUS304	SUS316
2	PACKING RING	SUS304	SUS304	SUS316
3	PROTECT TUBE	CARBON STEEL		
4	GLASS TUBE	GLASS'		
5	GLAND	SS41	SUS304	SUS316
6	GLAND NUT	S25C		
7	GLAND PACKING			
8	FLANGE	S25C	SUS304	SUS316
9	TAIL PIECE	S25C	SUS'304	SUS316
10	TAIL PIECE NUT	S25C		
11	GASKET			
12	CHECK BALL	SUS304	SUS304	SUS316
13	BODY	S25C	SUS304	SUS316
14	STEM	SUS304	SUS304	SUS316
15	DRAIN VALVE	SUS304	SUS304	SUS316
16	PACKING RING	SUS304	SUS304	SUS316
17	GLAND PACKING			
18	GLAND	SUS304	SUS304	SUS316
19	GLAND NUT	S25C		
20	HANDLE	FCMB2B		
21	SPRING WASHER	SS41	SS41	SS41
22	NUT	SUS304	SUS304	SUS304

KANEKO ARMORED GAUGE

Dimension

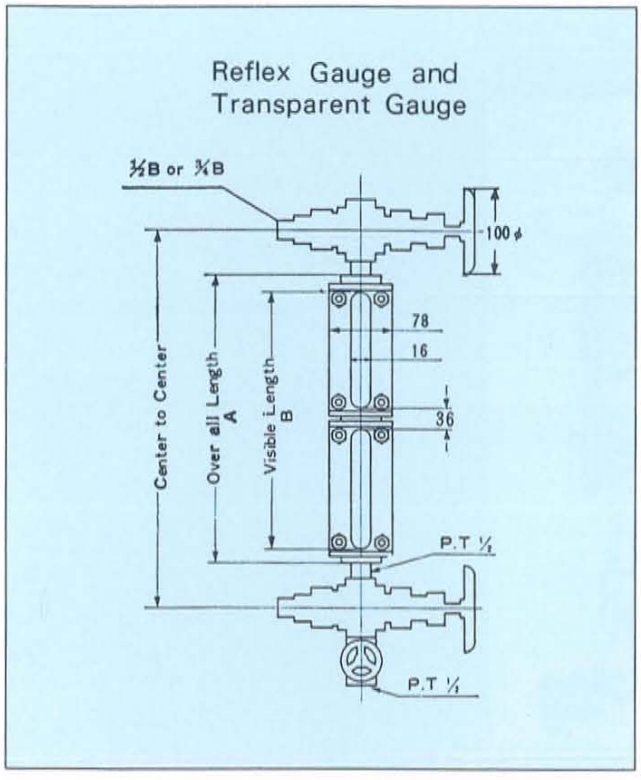

Size No. R	Size No. T	Visible Length	Boss Center
One Section			
1 x 1 R	1 x 1 T	171	385
1 x 2 R	1 x 2 T	181	395
1 x 3 R	1 x 3 T	201	415
1 x 4 R	1 x 4 T	231	445
1 x 5 R	1 x 5 T	261	475
1 x 6 R	1 x 6 T	281	495
1 x 7 R	1 x 7 T	301	515
1 x 8 R	1 x 8 T	321	535
Two Sections			
2 x 2 R	2 x 2 T	398	610
2 x 3 R	2 x 3 T	438	650
2 x 4 R	2 x 4 T	498	710
2 x 5 R	2 x 5 T	558	770
2 x 6 R	2 x 6 T	598	810
2 x 7 R	2 x 7 T	638	850
2 x 8 R	2 x 8 T	678	890
Three Sections			
3 x 4 R	3 x 4 T	765	975
3 x 5 R	3 x 5 T	855	1065
3 x 6 R	3 x 6 T	915	1125
3 x 7 R	3 x 7 T	975	1185
3 x 8 R	3 x 8 T	1035	1245
Four Sections			
4 x 6 R	4 x 6 T	1232	1445
4 x 7 R	4 x 7 T	1312	1525
4 x 8 R	4 x 8 T	1392	1605
Five Sections			
5 x 6 R	5 x 6 T	1549	1760
5 x 7 R	5 x 7 T	1649	1860
5 x 8 R	5 x 8 T	1749	1960
Six Sections			
6 x 7 R	6 x 7 T	1986	2200
6 x 8 R	6 x 8 T	2106	2320
Seven Sections			
7 x 7 R	7 x 7 T	2323	2535
7 x 8 R	7 x 8 T	2463	2675
Eight Sections			
8 x 7 R	8 x 7 T	2660	2870
8 x 8 R	8 x 8 T	2820	3030

〈Size No.〉

No. of section — Reflex — Non-Frosting

3×8 RF−20

Glass No. — Series No.

(Note) R=Reflex, T=Transparent, F=Non-Frosting
J=Jacketed, C=Large Chamber

For LNG Non-Frosting Large Chamber Reflex Gauge

Non-Frosting Large Chamber Transparent Gauge

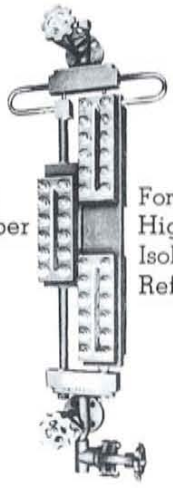

For High Pressure Isolable type Reflex Gauge

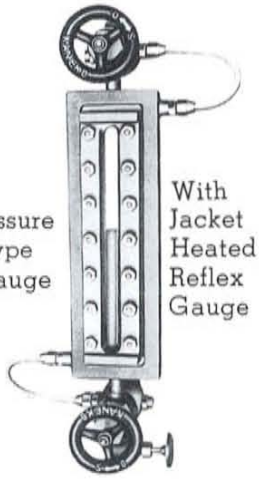

With Jacket Heated Reflex Gauge

With Illuminator Transparent Gauge

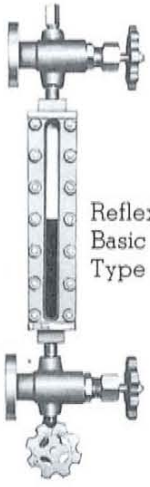

Reflex Gauge Basic Standard Type

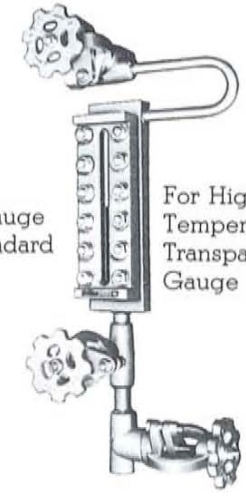

For High Temperature. Transparent Gauge

For High Pressure Isolable Type Transparent Gaupe

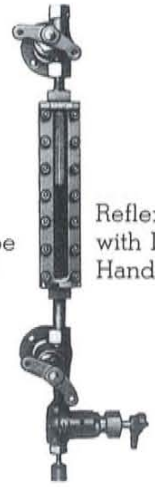

Reflex Gauge with Lever Handle

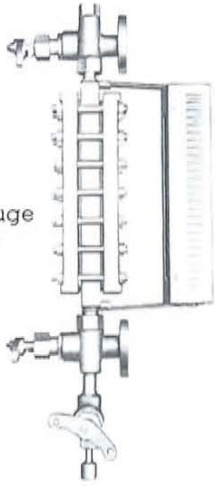

Transparent Gauge Mounted Illuminator of Fluorescent Light

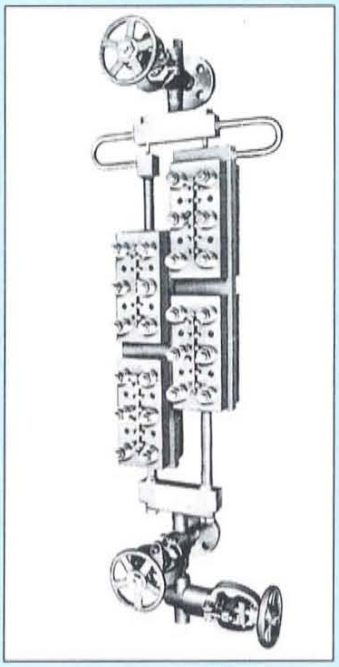

Established in 1918

KANEKO SANGYO CO.,LTD.

HEAD OFFICE: 5-10-6, Shiba, Minato-ku, Tokyo 108-0014, Japan
TEL: 03-3455-1414 FAX: 03-3456-5820

TEL: Tokyo 3455-1411 CABLE ADD: TOKYO KANEKO VALVE

Silent Technology
KANEKO

DISTRIBUTOR

printed in JAPAN. APR. 2011