neles

BALL VALVE

MBV

Series M1, M2

Installation, Maintenance and
Operating Instructions

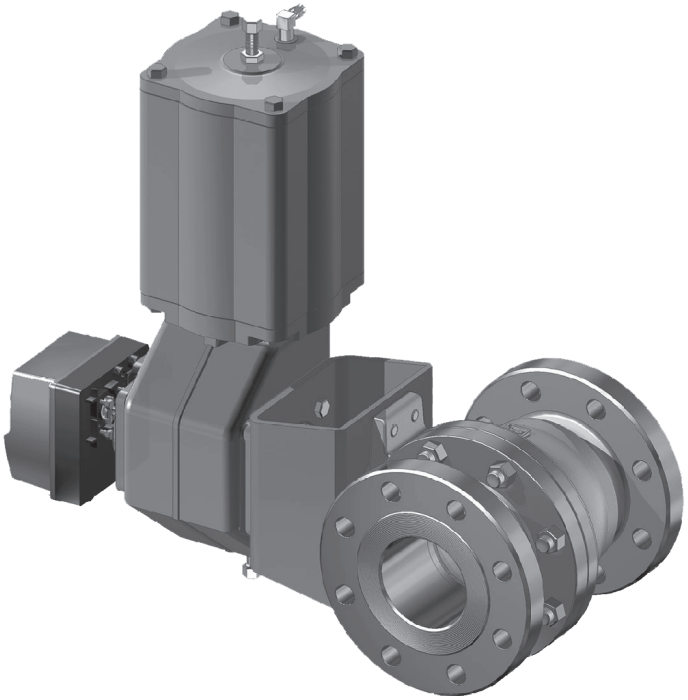

metso
Expect results

1 M 70 en • 11/2019

9 TOOLS

In addition to standard tools, the following special tools might be needed.

- For removal of the actuator:
  Extractor tools (Actuator Series B1C/B1J)

Product:	ID:
B1C/B1J 6	303821
B1C 8-11 / B1J 8-10	8546-1
B1C 12-17 / B1J 12-16	8546-2
B1C/B1J 20	8546-3
B1C/B1J 25	8546-4
B1C/B1J 32	8546-5
B1C 40 / B1J 322	8546-6
B1C 50	8546-7
B1C 502	8546-8

- For removal of the locked seats:
  Seat removal tool for P-seat.

Product size:	ID:
DN 25 (1")	270073
DN 40 (1½")	270075
DN 50 (2")	270076
DN 65 (2½")	278746
DN 80 (3")	270078
DN 100 (4")	270079
DN 125	270081
DN 150 (6")	270083
DN 200 (8")	270085
DN 250 (10")	270086
DN 300 (12")	270087
DN 350 (14")	280996
DN 400 (16")	280997

- For locking of the seats:
  Seat locking tools / Insertion tools (M series P seats & X series GA type K seats)

Product:	ID:
M1MA025P (1")	H018890
M1MA040P (1½")	H018889
M1MA050P (2")	H018886
M1MA065P (2½")	H021153
M1MA080P (3")	H018885
M1MA100P (4")	H018881
M1MA125P (5")	H027818
M1MA150P (6")	H016886
M1MA200P (8")	H018555
M1MA250P (10")	H018556
M1MA300P (12")	H018557

- For mounting the E-seat
  - mounting tool

These tools can be ordered from the manufacturer. Always give the valve type designation when ordering.

If you require additional assistance, please contact the manufacturer or manufacturer's representative.

10 ORDERING SPARE PARTS

When ordering spare parts, always include the following information:

- type code, sales order number, serial number (stamped on a valve body)
- number of the parts list, part number, name of the part and quantity required

This information can be found from the identification plate or documents

11 EXPLODED VIEWS AND PARTS LISTS

11.1 Sizes DN 25-40 / 1"-1.5", seat supported ball

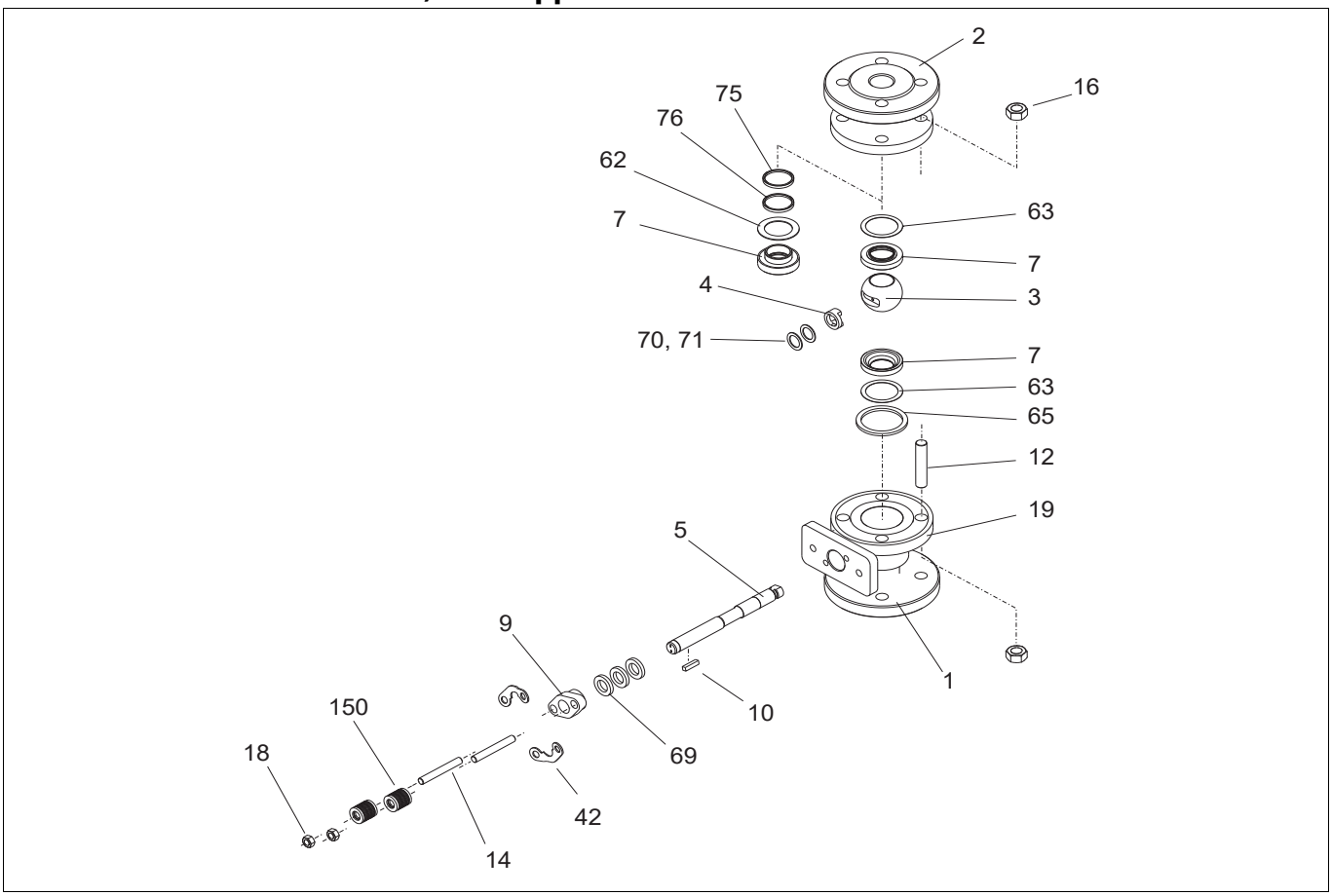

Item	Qty	Description	Spare part category
1	1	Body	
2	1	Body cap	
3	1	Ball/Q-TRIM ball	3
4	1	Spline driver (2" - 8" / DN 50 - 200)	3
		Thrust ring (1", 1 1/2" / DN 25, 40)	
5	1	Shaft	3
7	1, 2	Ball seat	2
9	1	Gland	
10	1	Key	3
12	4	Stud	
14	2	Stud	
16	8	Hexagon nut	
18	2	Hexagon nut	
19	1	ID plate	
25	1	Ball seat (H)	
42	2	Retaining plate	
50	1	Locking pin	
62	1	Seat spring	1
63	2	Back seal	1
65	1	Body gasket	1
69	1	Packing ring (set)	1
70	1	Thrust bearing	1
71	1	Thrust bearing	
75	1	Seat seal (H)	
76	1	Back-up ring	
150	2	Disc ring set	

Spare part category 1: Recommended soft parts, always needed for the repair. Delivered as a set.
Spare part category 2: Parts for replacing of the seat. Delivered as a set.
Spare part category 3: Parts for replacing of the closing element.
Spares for the full overhaul: All parts from the categories 1, 2 and 3.

11.2 Sizes DN 50-200 / 2"-8", seat supported ball

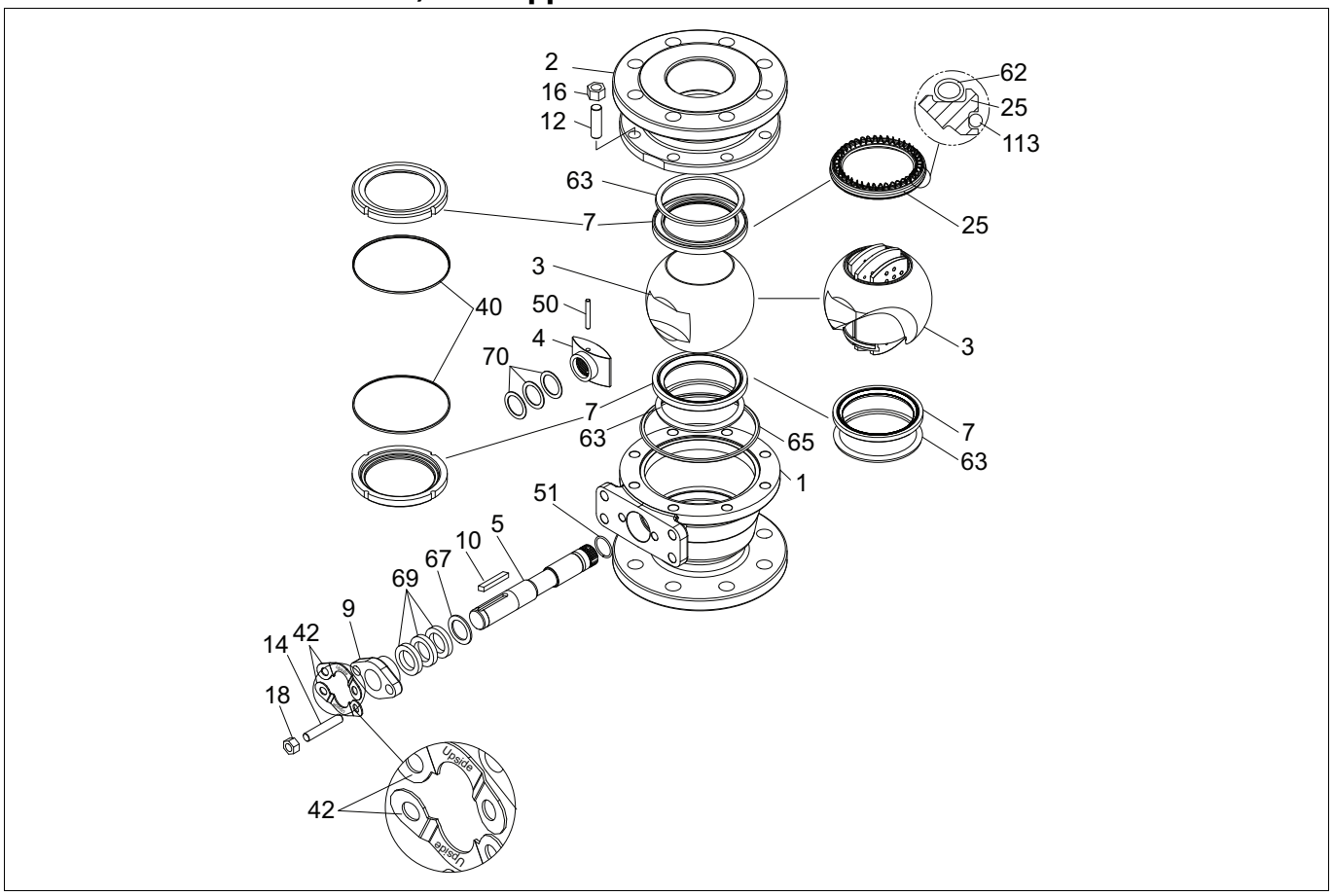

Item	Qty.	Description	Spare part category
1	1	Body	
2	1	Body cap	
3	1	Ball 1 Q-ball	3
4	1	Spline driver	3
5	1	Stem	3
7	2	Seat (P/S/K, T or M)	2
7	1	Seat (K), when E seat in the body cap	
9	1	Gland	
10	1	Key	3
12		Stud	
14	2	Stud	
16		Hexagon nut	
18	2	Hexagon nut	
25	1	Seat (E), when K seat in the body	
40	2	Lock ring (T/M)	
42	2	Retaining plate	
50	1	Cylindrical pin	
51	1	Retaining ring	
62	1	Spring (E)	1
63	2	Back seal (P/S/K)	1
	1	Back seal (S/K), when E seat in the body cap	1
65	1	Body gasket	1
67	1	Thrust ring	
69	1	Packing (set)	1
70	3	Thrust bearing	1
113	1	O-ring (E) / lip seal (E)	

Spare part category 1: Recommended soft parts, always needed for the repair. Delivered as a set.
Spare part category 2: Parts for replacing of the seat. Delivered as a set.
Spare part category 3: Parts for replacing of the closing element.
Spares for the full overhaul: All parts from the categories 1, 2 and 3.

11.3 Sizes DN 250-300 / 10"-12", seat supported ball

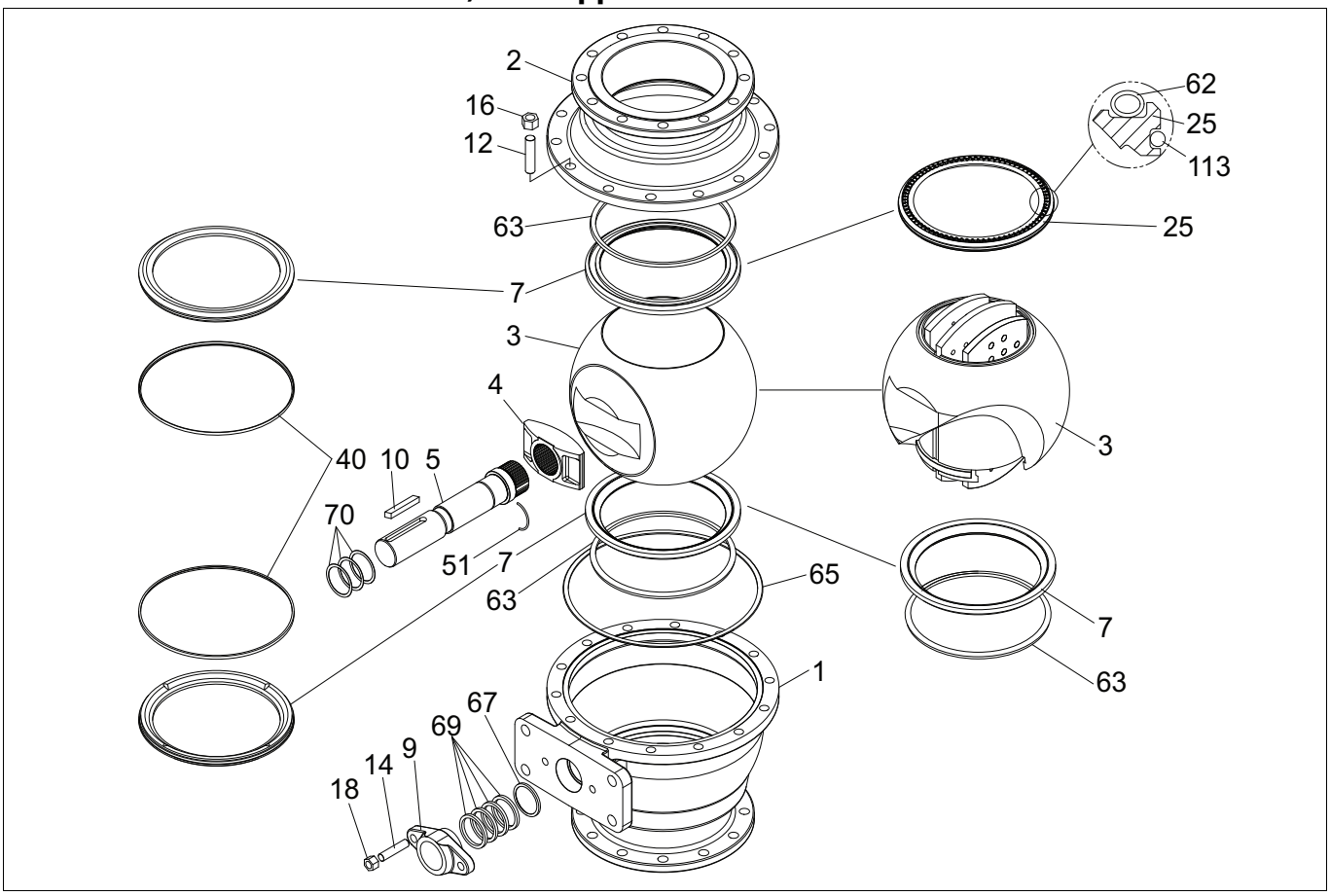

Item	Qty.	Description	Spare part category
1	1	Body	
2	1	Body cap	
3	1	Ball	3
3	1	Q-ball	3
4	1	Spline driver	3
5	1	Stem	3
7	2	Seat (P/S/K, T or M)	2
7	1	Seat (K), when E-seat in the body cap	2
9	1	Gland	
10	1	Key	3
12		Stud	
14	2	Stud	
16		Hexagon nut	
18	2	Hexagon nut	
25	1	Seat (E), when K-seat in the body	
40	2	Lock ring (T/M)	
51	1	Retaining ring	
62	1	Spring (E)	1
63	2	Back seal (P/S/K) 1 Back seal (S/K), when E-seat in the body cap	1
65	1	Body gasket	1
67	1	Thrust ring	
69	1	Packing (set)	1
70	3	Thrust bearing	1
113	1	O-ring (E) / lip seal (E)	

Spare part category 1: Recommended soft parts, always needed for the repair. Delivered as a set.
Spare part category 2: Parts for replacing of the seat. Delivered as a set.
Spare part category 3: Parts for replacing of the closing element.
Spares for the full overhaul: All parts from the categories 1, 2 and 3.

11.4 Sizes DN 250-400 / 10"-16", trunnion mounted ball

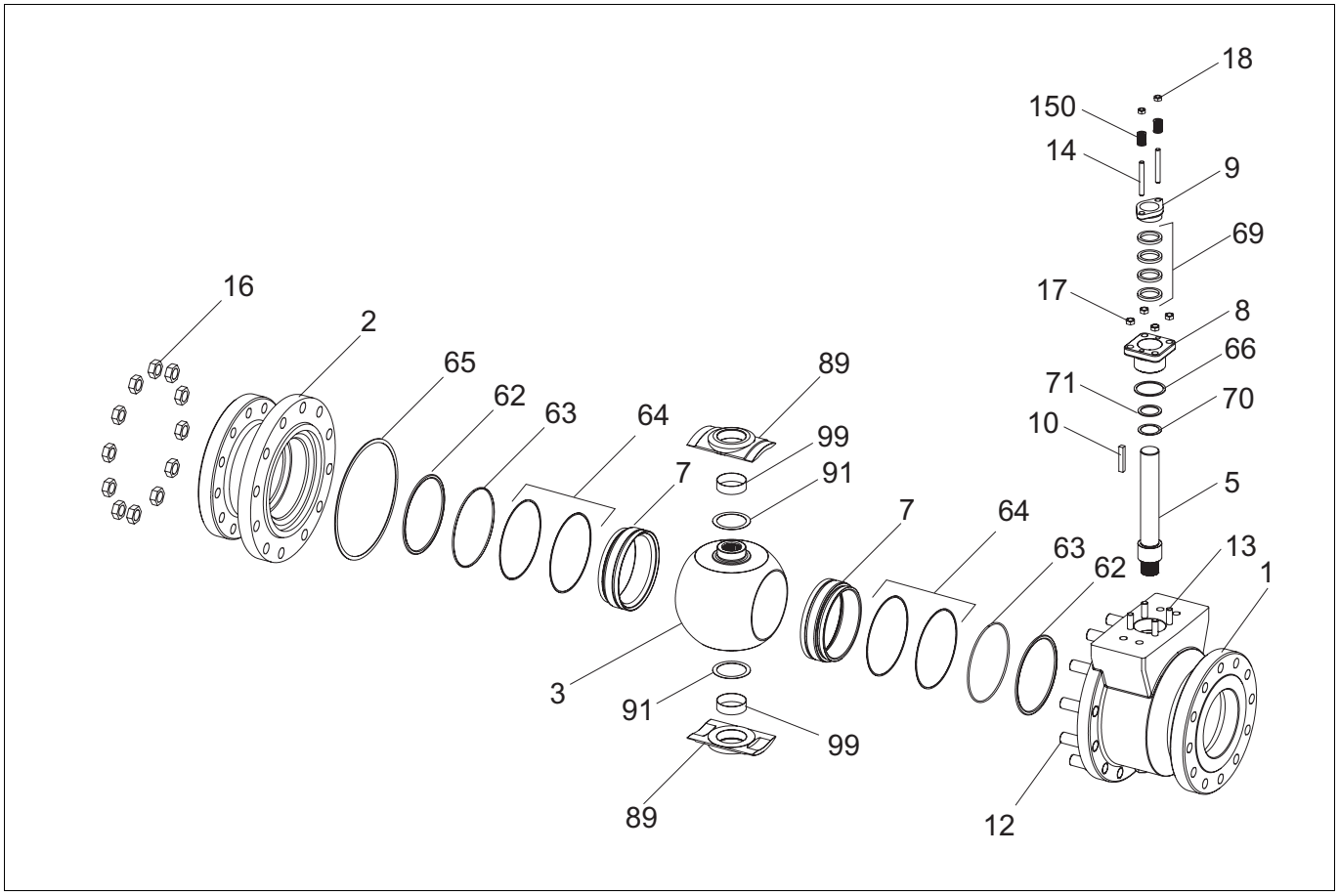

Item	Qty.	Description	Spare part category
1	1	Body	
2	1	Body cap	
3	1	Ball	3
5	1	Shaft	3
7	1 or 2	Seat (S, T)	2
	1 or 2	Seat (H)	
8	1	Bonnet	
9	1	Gland	
10	1	Key	3
12		Stud	
13		Stud	
14		Stud	
16		Hexagon nut	
17		Hexagon nut	
18		Hexagon nut	
62	1	Spring	
63	2	O-ring (S, T)	1
	1	Back seal (H)	1
64	2	Back-up ring	
65	1	Body gasket	1
66	1	Bonnet gasket	1
69	1	Packing / V-ring set	1
70	2	Thrust bearing (S, T)	3
	1	Thrust bearing (H)	3
71	1	Thrust bearing	
89	2	Trunnion plate	
91	2	Bearing spacer	3
99	2	Trunnion bearing	3
150	2	Disc spring set	

Spare part category 1: Recommended soft parts, always needed for the repair. Delivered as a set.
Spare part category 2: Parts for replacing of the seat. Delivered as a set.
Spare part category 3: Parts for replacing of the closing element.
Spares for the full overhaul: All parts from the categories 1, 2 and 3.

11.5 Sizes DN 450-600 / 18"-24", trunnion mounted ball

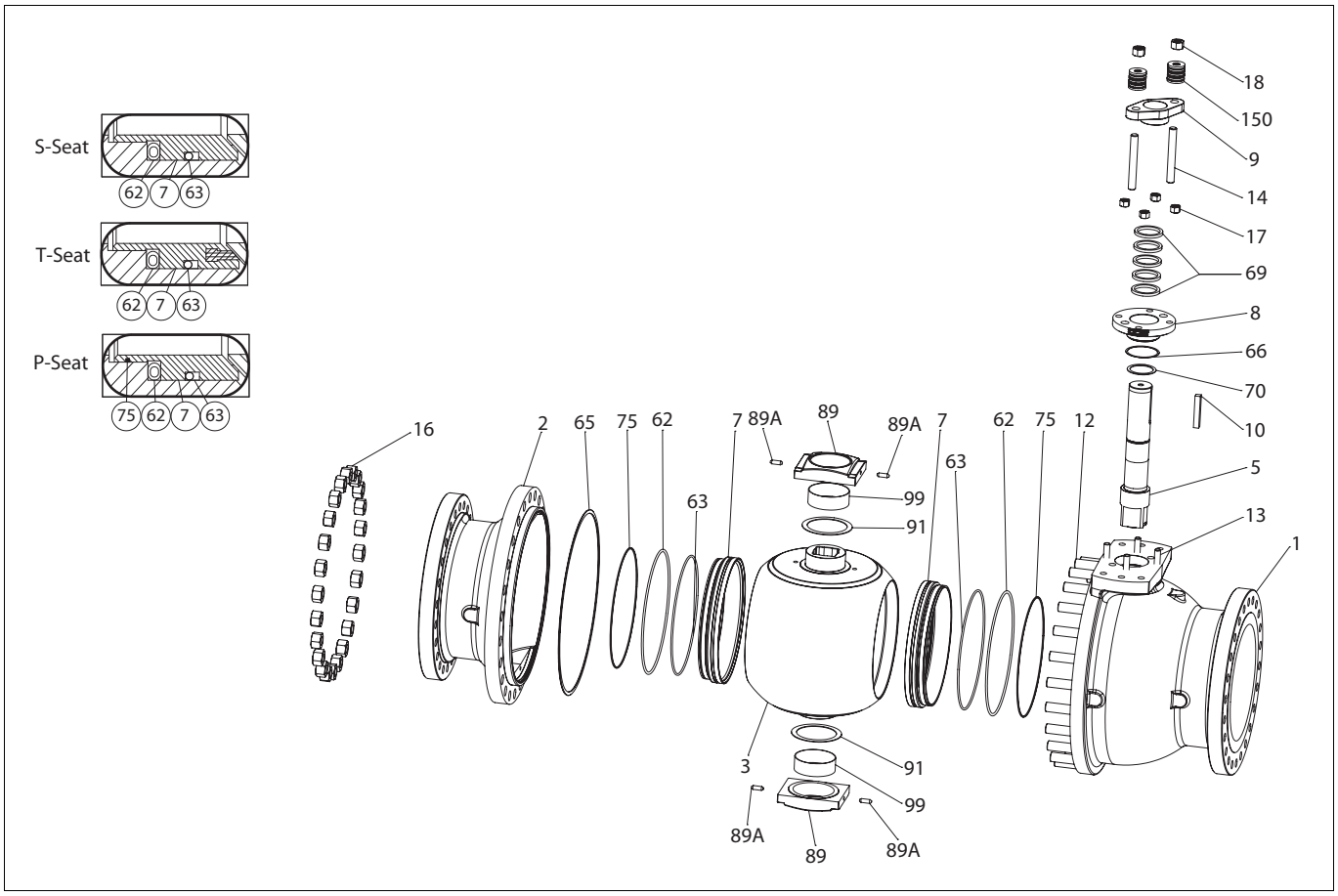

Item	Qty	Description	Spare part category
1	1	BODY	
2	1	BODY CAP	
3	1	BALL	3
5	1	SHAFT	3
7	1 or 2	SEAT (S, P, T)	2
8	1	BONNET	
9	1	GLAND	
10	1	KEY	3
12		STUD	
13		STUD	
14		STUD	
16		HEXAGON NUT	
17		HEXAGON NUT	
18		HEXAGON NUT	
19	1	IDENTIFICATION PLATE	
36	1	ANTI-STATIC SPRING	3
62	1 or 2	SPRING	2
63	1 or 2	O-RING	1
65	1	BODY SEAL SPIRAL WOUND	1
66	1	SHEET RING	1
69	1	V-RING SET	1
70	1	THRUST BEARING	1
75	1 or 2	BRAIDED SEAL SQUARE (P)	1
89	2	TRUNNION PLATE	
89A	4	PIN	1
91	2	THRUST BEARING	1
99	2	TRUNNION BEARING	1
150	2	DISC SPRING SET	

Spare part category 1: Recommended soft parts, always needed for the repair. Delivered as a set.
Spare part category 2: Parts for replacing of the seat. Delivered as a set.
Spare part category 3: Parts for replacing of the closing element.
Spares for the full overhaul: All parts from the categories 1, 2 and 3.

12 DIMENSIONS AND WEIGHTS

12.1 Seat supported valves

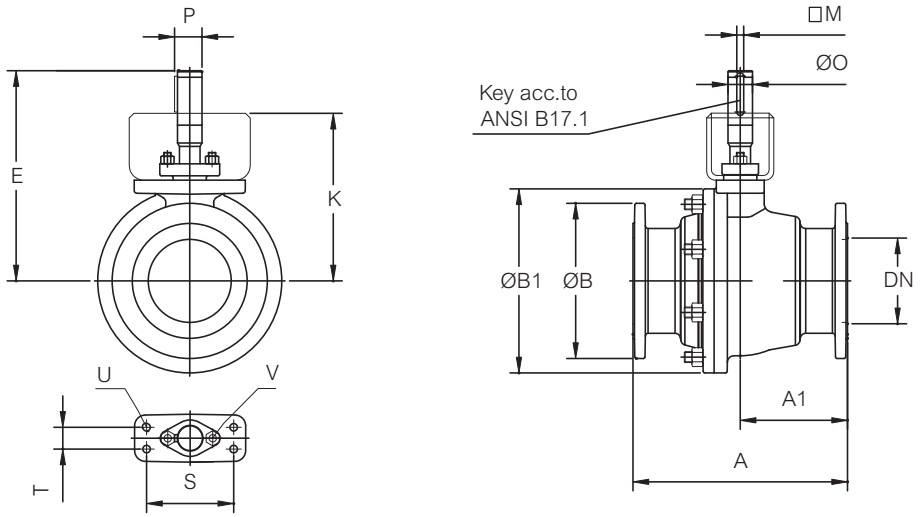

TYPE PN	DN	DIMENSIONS (mm)													WEIGHT (kg)	
		A	A1	ØB	ØB1	E	K	M	ØO	P	S	T	U	V	M1	Q-M1
M1M PN40 (10, 16, 25)	25	165	74	124	110	178	150	4.76	15	17	70	-	M10	M8	5	-
	40	165	70	155	145	206	168	4.76	20	22	70	-	M10	M10	8	-
	50	178	79	165	146	215	168	6.35	25	27.8	110	32	M12	M10	13	14
M1M PN40 (25)	65	270	135	185	154	223	176	6.35	25	27.8	110	32	M12	M10	20	-
	80	282	141	200	195	237	190	6.35	25	27.8	110	32	M12	M10	30	32
	100	305	152.5	235	252	309	250	9.52	35	39.1	130	32	M12	M10	50	55
	125	325	162.5	270	280	331	272	9.52	35	39.1	130	32	M12	M10	80	-
	150	403	201.5	300	346	386	305	12.70	45	50.4	160	40	M16	M14	120	130
M1L PN25	200	502	251	360	432	476	385	12.70	55	60.6	160	55	M20	M14	200	220
	250	568	284	425	512	582	472	15.87	65	71.9	230	90	M24	M20	295	335
	300	648	324	485	584	685	555	19.05	75	83.1	307.4	120	M30	M20	450	505
M1K PN16 (10)	65	270	135	185	154	223	176	6.35	25	27.8	110	32	M12	M10	20	-
	80	203	101.5	200	184	237	190	6.35	25	27.8	110	32	M12	M10	20	22
	100	229	114.5	220	236	309	250	9.52	35	39.1	130	32	M12	M10	35	37
	125	325	162.5	270	280	331	272	9.52	35	39.1	130	32	M12	M10	80	-
	150	394	197	285	338	386	305	12.70	45	50.4	160	40	M16	M14	100	110
M1K PN16	200	457	228.5	340	426	476	385	12.70	55	60.6	160	55	M20	M14	160	180
	250	533	266.5	405	512	582	472	15.87	65	71.9	230	90	M24	M20	280	320
	300	610	305	460	584	685	555	19.05	75	83.1	307.4	120	M30	M20	420	475
M1J PN10	200	457	228.5	340	426	476	385	12.70	55	60.6	160	55	M20	M14	160	180
	250	533	266.5	405	512	582	472	15.87	65	71.9	230	90	M24	M20	280	320
	300	610	305	460	584	685	555	19.05	75	83.1	307.4	120	M30	M20	420	475

TYPE Class	NPS	DIMENSIONS (mm)													WEIGHT (kg)	
		A	A1	ØB	ØB1	E	K	M	O	P	S	T	U	V	M2	Q-M2
M2C Class 150	1	165	74	124	110	178	150	4.76	Ø 15	17	70	-	M10	M8	5	-
	11/2	165	70	155	145	206	168	4.76	Ø 20	22	70	-	M10	M8	8	
	2	178	79.0	152.4	146	215	168	6.35	Ø 25	27.8	110	32	M12	3/8	11	12
	3	203	101.5	190.5	190	237	190	6.35	Ø 25	27.8	110	32	M12	3/8	25	27
	4	229	110.5	228.6	241	309	250	9.52	Ø 35	39.1	130	32	M12	3/8	40	43
	6	394	197.0	279.5	342	386	305	12.70	Ø 45	50.4	160	40	M16	1/2	100	110
	8	457	228.5	342.9	430	476	385	12.70	Ø 55	60.6	160	55	M20	1/2	175	195
	10	533	266.5	406.4	512	582	472	15.87	Ø 65	71.9	230	90	M24	3/4	290	330
	12	610	305.0	482.6	592	685	555	19.05	Ø 75	83.1	307	120	M30	3/4	460	515
M2D Class 300	1	165	74.0	124.0	110	178	150	4.76	Ø 15	17.0	70	-	M10	M8	5	-
	11/2	191	70.0	155.0	145	206	168	4.76	Ø 20	22.0	70	-	M10	M8	10	-
	2	216	89.0	165.1	146	215	168	6.35	Ø 25	27.8	110	32	M12	3/8	15	17
	3	282	141.0	209.6	200	237	190	6.35	Ø 25	27.8	110	32	M12	3/8	35	37
	4	305	152.5	254.0	254	309	250	9.52	Ø 35	39.1	130	32	M12	3/8	60	63
	6	403	201.5	317.5	353	386	305	12.70	Ø 45	50.4	160	40	M16	1/2	135	145
	8	419	209.5	381.0	462	476	385	12.70	Ø 55	60.6	160	55	M20	1/2	240	260
	10	457	208.0	445.5	552	582	472	15.87	Ø 65	71.9	230	90	M24	3/4	365	405
	12	502	223.0	520.7	626	685	555	19.05	Ø 75	83.1	307	120	M30	3/4	545	600

12.2 Trunnion type valves dimensions

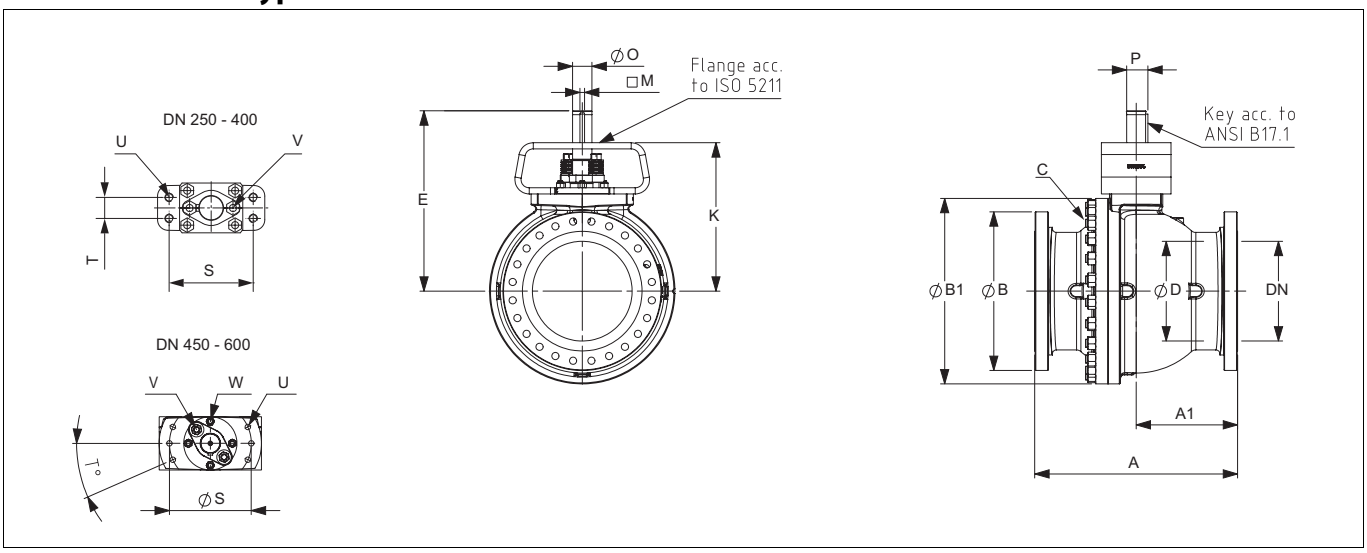

TYPE PN	DN	DIMENSIONS (mm)													WEIGHT (kg)	
		A	A1	ØB	ØB1	E	K	M	ØO	P	S	T	U	V	M1	Q-M1
M1JW/M1JZ PN 10	250	533	267	395	514	562	472	12.70	55	60.60	230	90	M24	M14	325	360
	300	610	305	445	592	605	515	12.70	55	60.60	230	90	M24	M14	480	530
	350	686	343	505	665	741	607	19.05	75	83.15	330	120	M30	M20	635	710
	400	762	381	565	750	779	633	22.23	85	94.63	330	120	M30	M20	840	940
M1KW/M1KZ PN 16	250	533	267	405	514	562	472	12.70	55	60.60	230	90	M24	M14	325	360
	300	610	305	460	592	605	515	12.70	55	60.60	230	90	M24	M14	480	530
	350	686	343	520	665	741	607	19.05	75	83.15	330	120	M30	M20	635	710
	400	762	381	580	750	779	633	22.23	85	94.63	330	120	M30	M20	840	940
M1LW/M1LZ PN 25	250	568	284	425	580	562	472	12.70	55	60.60	230	90	M24	M14	330	370
	300	648	324	485	652	605	515	12.70	55	60.60	230	90	M24	M14	610	660
	350	762	381	555	665	741	607	19.05	75	83.15	330	120	M30	M20	680	750
	400	838	419	620	750	779	633	22.23	85	94.63	330	120	M30	M20	890	980
M1MW/ M1MZ PN 40	250	568	284	450	580	562	472	12.70	55	60.60	230	90	M24	M14	330	370
	300	648	324	515	652	605	515	12.70	55	60.60	230	90	M24	M14	610	660
	350	762	381	580	700	741	607	19.05	75	83.15	330	120	M30	M20	800	870
	400	838	419	660	799	779	633	22.23	85	94.63	330	120	M30	M20	1015	1100

TYPE	DN	DIMENSIONS (mm)																WEIGHT
		ØD	A	A1	ØB	ØB1	E	K	M	ØO	P	ØS	T	U	V	W	C	kg
M1JW/M1JZ PN 10	450	436	864	432	615	800	794	648.5	22.23	85	94.63	330	21.3	M30	M20	M20	M27	981
	500	487	914	457	670	885	811.5	665.5	22.23	85	94.63	330	21.3	M30	M20	M20	M27	1288
	600	589	1067	533.5	780	1041	987	831	22.23	95	104.83	400	23.6	M30	M30	M24	M30	2037
M1KW/M1KZ PN 16	450	436	864	432	640	800	794	648.5	22.23	85	94.63	330	21.3	M30	M20	M20	M27	1011
	500	487	914	457	715	885	811.5	665.5	22.23	85	94.63	330	21.3	M30	M20	M20	M27	1328
	600	589	1067	533.5	840	4041	987	831	22.23	95	104.83	400	23.6	M30	M30	M24	M30	2141
M1LW/M1LZ PN 25	450	436	914	457	670	785	794	648.5	22.23	85	94.63	330	21.3	M30	M20	M20	M24	1098
	500	487	991	495.5	730	880	811.5	665.5	22.23	85	94.63	330	21.3	M30	M20	M20	M27	1438
	600	589	1143	571.5	845	1050	987	831	22.23	95	104.83	400	23.6	M30	M30	M24	M30	2219
M1MW/ M1MZ PN 40	450	436	914	457	685	825	794	648.5	22.23	85	94.63	330	21.3	M30	M20	M20	M36	1210
	500	487	991	495.5	755	906	882	726	22.23	95	104.83	400	23.6	M30	M30	M24	M39	1652
	600	589	1143	571.5	890	1060	1090	885	31.75	120	133.75	460	23.6	M30	M30	M24	M39	2709

TYPE PN	NPS	DIMENSIONS (mm)													WEIGHT (kg)	
		A	A1	ØB	ØB1	E	K	M	ØO	P	S	T	U	V	M2	Q-M2
M2CW/ M2CZ Class 150	10	533	267	405	514	562	472	12.70	55	60.60	230	90	M24	M14	325	360
	12	610	305	485	592	605	515	12.70	55	60.60	230	90	M24	M14	480	530
	14	686	343	535	665	741	607	19.05	75	83.15	330	120	M30	M20	635	710
	16	762	381	595	750	779	633	22.23	85	94.63	330	120	M30	M20	840	940
M2DW/ M2DZ Class 300	10	568	284	445	580	562	472	12.70	55	60.60	230	90	M24	M14	330	370
	12	648	324	520	652	605	515	12.70	55	60.60	230	90	M24	M14	610	660
	14	762	381	585	700	741	607	19.05	75	83.15	330	120	M30	M20	800	870
	16	838	419	650	799	779	633	22.23	85	94.63	330	120	M30	M20	1015	1100

Type	DN	DIMENSIONS, mm																WEIGHT
		ØD	A	A1	ØB	ØB1	E	K	M	ØO	P	S	T	U	V	W	C	kg
ASME 150	450	436	914	457	710	825	793,9	645,7	22,23	85	95,68	330	1235	M30	M20	M20	M27	1001
	500	487	991	495,5	775	906	881	725	22,23	85	105,87	330	1692	M30	M20	M20	M27	1304
	600	589	1143	571,5	915	1060	1090	885	31,75	95	136,54	400	2636	M30	M30	M24	M30	2087
ASME 300	450	436	864	389,5	635	800	793,9	645,7	22,23	85	95,68	330	21,3	M30	M20	M20	M36	1235
	500	487	914	457	700	885	811	665	22,23	95	95,68	400	23,6	M30	M30	M24	M39	1692
	600	589	1067	533,5	815	1041	987	831	22,23	120	105,87	460	23,6	M30	M30	M24	M39	2636

Type	NPS	DIMENSIONS, inch																WEIGHT
		ØD	A	A1	ØB	ØB1	E	K	M	ØO	P	S	T	U	V	W	C	lbs
ASME 150	18	17.17	35.98	17.99	27.95	32.48	31.26	25.42	0.88	3.35	3.77	12.99	48.62	M30	M20	M20	M27	2224
	20	19.17	39.02	19.51	30.51	35.67	34.69	28.54	0.88	3.35	4.17	12.99	66.61	M30	M20	M20	M27	2898
	24	23.19	45.00	22.50	36.02	41.73	42.91	34.84	1.25	3.74	5.38	15.75	103.78	M30	M30	M24	M30	4638
ASME 300	18	17.17	34.02	15.33	25.00	31.50	31.26	25.42	0.88	3.35	3.77	12.99	0.84	M30	M20	M20	M36	2744
	20	19.17	35.98	17.99	27.56	34.84	31.93	26.18	0.88	3.74	3.77	15.75	0.93	M30	M30	M24	M39	3760
	24	23.19	42.01	21.00	32.09	40.98	38.86	32.72	0.88	4.72	4.17	18.11	0.93	M30	M30	M24	M39	5858

12.3 Topwork assembly dimensions

VALVE + B1C/B1J/B1JA

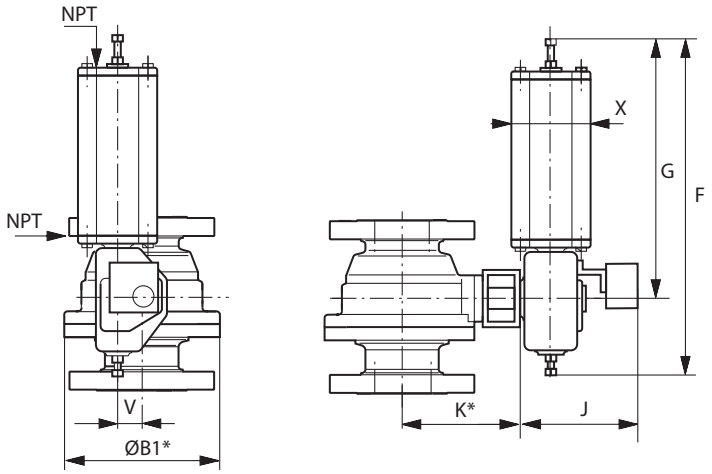

*) See K and ØB1 dimensions from tables on page 8 and 9.

B1C ACTUATOR

Actuator	DIMENSIONS, mm					NPT	kg
	F	G	J	V	X		
B1C6	400	260	283	36	90	1/4	4.2
B1C9	455	315	279	43	110	1/4	9.6
B1C11	540	375	290	51	135	3/8	16
B1C13	635	445	316	65	175	3/8	31
B1C17	770	545	351	78	215	1/2	54
B1C20	840	575	385	97	215	1/2	73
B1C25	1040	710	448	121	265	1/2	131
B1C32	1330	910	525	153	395	3/4	256
B1C40	1660	1150	595	194	505	3/4	446
B1C50	1970	1350	690	242	610	1	830

Actuator	DIMENSIONS, inch					NPT	lbs
	F	G	J	V	X		
B1C6	15.75	10.24	11.14	1.42	3.54	1/4	9
B1C9	17.91	12.40	10.98	1.69	4.33	1/4	21
B1C11	21.26	14.76	11.42	2.01	5.31	3/8	35
B1C13	25.00	17.52	12.44	2.56	6.89	3/8	68
B1C17	30.31	21.46	13.82	3.07	8.46	1/2	119
B1C20	33.07	22.64	15.16	3.82	8.46	1/2	161
B1C25	40.94	27.95	17.64	4.76	10.43	1/2	289
B1C32	52.36	35.83	20.67	6.02	15.55	3/4	564
B1C40	65.35	45.28	23.43	7.64	19.88	3/4	983
B1C50	77.56	53.15	27.17	9.53	24.02	1	1829

B1J/B1JA ACTUATOR

Actuator	DIMENSIONS, mm					NPT	kg
	F	G	J	V	X		
B1J/B1JA6	485	368	273	36	110	3/8	8
B1J/B1JA8	560	420	279	43	135	3/8	17
B1J/B1JA10	650	490	290	51	175	3/8	30
B1J/B1JA12	800	620	316	65	215	1/2	57
B1J/B1JA16	990	760	351	78	265	1/2	100
B1J/B1JA20	1200	935	358	97	395	3/4	175
B1J/B1JA25	1530	1200	448	121	505	3/4	350
B1J/B1JA32	1830	1410	525	153	540	1	671
B1J/B1JA40	2095	1578	580	194	724	1	1100

Actuator	DIMENSIONS, inch					NPT	lbs
	F	G	J	V	X		
B1J/B1JA6	19.09	14,49	10.75	1.42	4.33	3/8	20
B1J/B1JA8	22.05	16.54	10.98	1.69	5.31	3/8	37
B1J/B1JA10	25.59	19.29	11.42	2.01	6.89	3/8	66
B1J/B1JA12	31.50	24.41	12.44	2.56	8.46	1/2	126
B1J/B1JA16	38.98	29.92	13.82	3.07	10.43	1/2	220
B1J/B1JA20	47.24	36.81	14.09	3.82	15.55	3/4	386
B1J/B1JA25	60.24	47.24	17.64	4.76	19.88	3/4	771
B1J/B1JA32	72.05	55.51	20.67	6.02	21.26	1	1479
B1J/B1JA40	82.48	62.13	22.8	7.64	28.5	1	2424

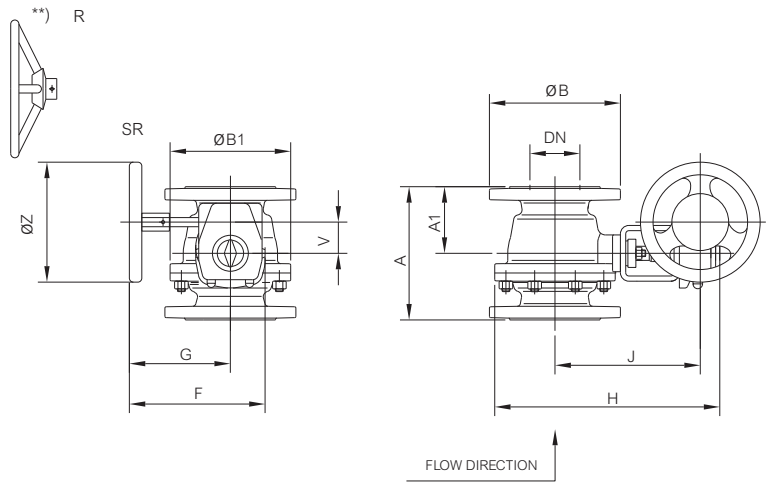

SEAT SUPPORTED VALVE M1 AND MANUAL GEAR OPERATOR SERIES M

DN	TYPE	ACTUATOR / MOUNTING	DIMENSIONS, mm										WEIGHT (kg)
			A	A1	ØB	ØB1	F	G	H	J	V	ØZ	
65	M1J, M1K	M07/25 / F07	270	135	185	154	235	184	320	205	52	160	23
80		M07/25 / F07	203	101.5	200	184	235	184	350	220	52	160	25
100		M12/35 / F12	229	114.5	220	236	307	238	455	292	71	315	45
100		M14/35 / F14	229	114.5	220	236	385	285	465	293	86	400	60
150		M14/45 / F14	394	197	285	338	385	285	570	348	86	400	120
150		M15/45 / F16	394	197	285	338	456	346	580	354	105	500	135
200		M15/55 / F16	457	228.5	340	426	456	346	700	434	105	500	195
200		M16/55 / F16	457	228.5	340	426	530	387	725	441	130	500	210
250		M16/65 / F25	533	266.5	405	512	530	387	855	528	130	500	340
300		M25/75 / F25	610	305	460	584	597	412	1010	615	182	600	510
200	M1L	M16/55 / F16	502	251	360	432	530	387	730	440	130	500	250
250		M16/65 / F25	568	284	425	512	530	387	855	528	182	600	355
300		M25/75 / F25	648	324	485	584	597	412	1010	615	182	600	540
25	M1J, M1K, M1L, M1M	M07/15 / F07	165	70	124	110	235	184	270	179	52	160	9
40		M07/20 / F07	165	74	155.5	149	235	184	307	197	52	160	12
50		M07/25 / F07	178	79	165	146	235	184	310	198	52	160	20
65	M1L, M1M	M07/25 / F07	270	135	185	154	235	184	320	205	52	160	23
80		M10/25 / F10	282	141	200	195	238	187	355	219	52	200	40
80		M12/25 / F12	282	141	200	195	307	238	380	232	71	315	45
100		M12/35 / F12	305	152.5	235	252	307	238	465	292	71	315	65
100		M14/35 / F14	305	152.5	235	252	385	285	470	293	86	400	75
150		M15/45 / F16	403	201.5	300	346	456	346	585	354	105	500	150

**) Actuators M07...M12 are equipped with handwheel type SR, P
actuators M14...M25 are equipped with handwheel type R.
Face-to-face dimensions acc. to ISO 5752 ppressure ratings
J=PN10, K=PN16, L=PN25, M=PN40P flanged, full bore

SEAT SUPPORTED VALVE M2 AND MANUAL GEAR OPERATOR SERIES M

NPS	TYPE	ACTUATOR / MOUNTING	DIMENSIONS, mm										WEIGHT (kg)
			A	A1	ØB	ØB1	F	G	H	J	V	Øz	
1	M2C	M07/15 / F07	165	74	124	110	235	184	270	177	52	160	9
1,5		M07/20 / F07	165	70	155	145	235	184	305	195	52	160	13
2		M07/25 / F07	178	79.0	152.4	146	235	184	310	198	52	160	15
3		M07/25 / F07	203	101.5	190.5	190	235	184	350	220	52	160	29
4		M12/25 / F12	229	110.5	228.6	241	307	238	455	292	71	315	51
6		M14/45 / F14	394	197.0	279.5	342	385	285	570	348	86	400	120
8		M15/55 / F16	457	228.5	342.9	430	456	346	700	434	105	500	205
10		M16/65 / F25	533	266.5	406.4	512	530	387	855	527	130	500	330
12		M25/75 / F25	610	305.0	482.6	592	597	412	1015	615	182	600	520
1	M2D	M07/15 / F07	165	74.0	124.0	110	235	184	270	177	52	160	12
1,5		M07/20 / F07	191	70.0	155.0	145	235	184	305	195	52	160	16
2		M07/25 / F07	216	89.0	165.1	146	235	184	310	198	52	160	19
3		M07/25 / F07	282	141.0	209.6	200	235	184	350	220	52	160	40
4		M12/25 / F12	305	152.5	254.0	254	307	238	455	292	71	315	70
6		M14/45 / F14	403	201.5	317.5	353	385	285	570	348	86	400	155
8		M15/55 / F16	419	209.5	381.0	462	456	346	700	434	105	500	265
10		M16/65 / F25	457	208.0	445.5	552	530	387	875	527	130	500	400
12		M25/75 / F25	502	223.0	520.7	626	597	412	1030	615	182	600	605

TRUNNION TYPE VALVE M1 AND MANUAL GEAR OPERATOR SERIES M

DN	TYPE	ACTUATOR / MOUNTING	DIMENSIONS, mm										WEIGHT (kg)
			A	A1	ØB	ØB1	F	G	H	J	V	ØZ	
250	M1JW/M1JZ	M15/55 / F16	533	267	395	514	456	346	880	520	105	500	335
300		M16/55 / F16	610	305	445	592	530	387	990	570	130	500	500
350	M1KW/ M1KZ	M25/75 / F25	686	343	520	665	597	412	1160	665	182	600	740
400		M25/85 / F25	762	381	580	750	597	412	1225	690	182	600	950
250	M1LW/ M1LZ	M15/55 / F16	568	284	425	580	456	346	910	520	105	500	350
300		M16/55 / F16	648	324	485	652	530	387	1020	570	130	500	515
350		M25/75 / F25	762	381	555	700	597	412	1175	665	182	600	800
400		M25/85 / F25	838	419	620	799	597	412	1250	690	182	600	1030
250	M1MW/M1MZ	M15/55 / F16	568	284	450	580	456	346	910	520	105	500	505
300		M16/55 / F16	648	324	515	652	530	387	1020	570	130	500	650
350		M25/75 / F25	762	381	580	700	597	412	1175	665	182	600	920
400		M25/85 / F25	838	419	660	799	597	412	1250	690	182	600	1250

Face-to-face dimensions acc. to ISO 5752
Pressure ratings J=PN10, K=PN16, L=PN25, M=PN40
Flanged, full bore

Face-to-face dimensions acc. to ASME B16.10
Pressure ratings C=ASME 150, D=ASME 300
Flanged, full bore

TRUNNION TYPE VALVE M2 AND MANUAL GEAR OPERATOR SERIES M

NPS	TYPE	ACTUATOR/ MOUNTING	DIMENSIONS, mm										WEIGHT (kg)
			A	A1	ØB	ØB1	F	G	H	J	V	Øz	
10	M2CW/M2CZ	M15/55 / F16	533	267	405	514	456	346	815	520	105	500	335
12		M16/55 / F16	610	305	485	592	530	387	965	570	130	500	500
14		M25/75 / F25	686	343	535	665	597	412	1150	670	182	600	740
16		M25/85 / F25	762	381	595	750	597	412	1120	700	182	610	950
10	M2DW/M2DZ	M15/55 / F16	568	284	445	552	456	346	835	520	105	500	505
12		M16/55 / F16	648	324	520	626	530	387	980	570	130	500	650
14		M25/75 / F25	762	381	585	700	597	412	1160	670	182	600	920
16		M25/85 / F25	838	419	650	800	597	412	1240	700	182	610	1250

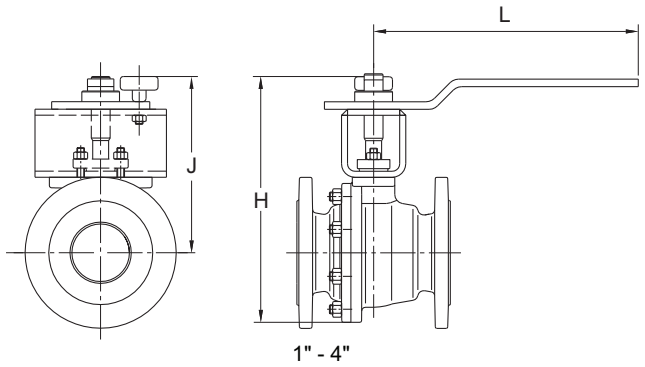

SEAT SUPPORTED VALVE M1 AND HAND LEVER LX/LK

DN	TYPE	HAND LEVER	DIMENSIONS, mm			WEIGHT (kg)
			H	J	L	
25	M1M, M1L, M1K, M1J	LX180A	263	201	140	6
40		LX220A	304	227	170	9
50		LK350	295	222	350	14
65	M1M, M1L	LK350	305	230	350	21
80		LK350	342	244	350	35
100		LK450	435	309	450	55
65	M1K, M1J	LK350	305	230	350	21
80		LK350	336	244	350	25
100		LK450	427	309	450	40

SEAT SUPPORTED VALVE M2 AND HAND LEVER LX / LK

NPS	TYPE	HAND LEVER	DIMENSIONS, mm			WEIGHT (kg)
			H	J	L	
1	M2C	LX180A	263	201	140	6
1.5		LX220A	304	227	170	10
2		LK350	300	222	350	15
3		LK350	340	244	350	30
4		LK450	430	309	450	45
1	M2D	LX180A	263	201	140	9
1.5		LX220A	304	227	170	13
2		LK350	305	222	350	20
3		LK350	350	244	350	40
4		LK450	435	309	450	65

13 TYPE CODE

MBV MODULAR BALL VALVE, Series M

1.	2.	3.	4.	5.	6.	7.	8.	9.		10.
	M1	M	A	150	A	P	V	A	/	-

1. sign	Low noise construction
Q-	Attenuator in flow port of ball

2. sign	Valve series, face-to-face length
M1	Full bore, seat supported, f-to-f length acc. to ISO 5752 basic series 3, 4 , 12 or 15 depending on size and pressure class. Seat supported DN 025-300, trunnion mounted DN 250-600.
M2	Full bore, seat supported, f-to-f length acc. to ASME B16.10
M9	Face-to-Face acc. to P-series. Seat supported types for sizes: DN 100, 150, 200, 250 and 300. Trunnion mounted types for sizes: DN 350 and 600.

3. sign	Pressure rating of body and flanges
J	EN PN 10
K	EN PN 16
L	EN PN 25
M	EN PN 40
R	JIS 10K
S	JIS 16K
T	JIS 20K
C	ASME Class 150
D	ASME Class 300

4. sign	Construction
A	Standard construction, seat supported
W	Trunnion mounted, 2-seats
Z	Trunnion mounted, 1-seat *
P	Pocket Feeder (only sizes DN150 and DN200mm, EN PN10 and EN PN16)

5. sign	Size
Seat supported valves	025, 040, 050, 065, 080, 100, 125, 150, 200, 250, 300 (M1) 01, 1H, 02, 03, 04, 06, 08**, 10**, 12** (M2)
Trunnion mounted valves	250, 300, 350, 400, 450, 500, 600 (M1) 10, 12, 14, 16, 18, 20, 24 (M2)

6. sign	MATERIALS			
	Body material	Trim (and Coating) material	Stem material	Bolting material / thread
A	CF8M	CF8M (+ Hard Chrome, if metal seat)	AISI 329 trunnion mounted: XM-19 (DN250-600, 10"-24")	A2-70 (M1) B8M/8M (M2) /metric
C	CG8M	CG8M (+ Hard Chrome, if metal seat)	AISI 329 trunnion mounted: XM-19 (DN250-600, 10"-24")	A2-70 (M1) B8M/8M (M2) /metric
U	CK-3MCuN	CK-3MCuN (& Ceramic coating, if metal seat)	UNS S31254	A2-70 (M1) B8M/8M (M2) /metric
S*	CF8M + Cobalt based alloy sleeves in flow ports	CF8M (cobalt based coating on ball surface and flow port)	AISI 329 Only for Seat supported type	A2-70 (M1) B8M/8M (M2) /metric
X**	4A	4A (+ Hard Chrome, if metal seat)	AISI 329 trunnion mounted: XM-19 (DN250-600, 10"-24")	A2-70 (M1) B8M/8M (M2) /metric
	Specials for POCKET FEEDER valves			
G (DN150,200)	G (DN150,200)	CF8M UNS S31803 & Tungsten chrome carbide (W/Cr)C	XM-19	A2-70 (M1) B8M/8M (M2) / metric

*Material code "S", only for SEAT SUPPORTED types.
** Intended for erosive (black liquor) evaporation service with metal seats (V).

7. sign	MATERIALS			
	Seat type	Seat material	Bearing material	Back seal material
	SEAT SUPPORTED (*			
P	locked	SS + Cobalt based hard facing	PTFE + Graphite	PTFE
X	soft	Xtreme®	PTFE + Graphite	-
T	soft	PTFE	PTFE + Graphite	-
S	unlocked	SS + Cobalt based hard facing	PTFE + Graphite	PTFE
E	low Δp	SS + Cobalt based hard facing	PTFE + Graphite	PTFE/FPM
C	locked	CK-3MCuN + Cobalt based hard facing	PTFE + Graphite	PTFE
V	locked	4A + Cobalt based hard facing	PTFE + Graphite	PTFE
M	soft	Filled PTFE	PTFE + Graphite	-
A (DN050,080)	locked/ forced	UNS S31803 + Cobalt based hard facing	PTFE + Graphite	Graphite and EPDM
B (DN150,200)	locked/ forced	UNS S31803 + Tungsten chrome carbide (W/Cr)C	Cobalt based alloy and SS steel	Graphite and Viton
	TRUNNION MOUNTED			
S	metal	SS + Cobalt based hard facing	PTFE + Graphite	Viton GF
P	metal	SS + Cobalt based hard facing	PTFE + Graphite	FFKM
T	soft	PTFE + C25	PTFE + Graphite	-

Note: Sizes DN 25mm and 40mm, all bearing material PTFE

8. sign	Packing	Body gasket
V	PTFE V-rings,	PTFE
F	Graphite	Graphite
M	Modified PTFE V-ring (*	PTFE
G	Live loaded graphite packing	Graphite
T	Live loaded PTFE packing for	PTFE

(* for high cycle applications in liquor service having tendency for built-up and mechanical packing wear.

9. sign	Model code
A	Version

10. sign	End connection style
Standard, without sign	EN 1092-1 Type B1 (Ra 3.2 - 12.5), standard, without sign (M1) ASME B16.5 0.06" raised face with Ra 3.2 - 6.3 µm, Ra 125 - 250 µin (M2)
12	ASME B16.5 Large male (M2)
13	ASME B16.5 Large female (M2)
23	EN 1092-1 Type C Tongue (M1)
24	EN 1092-1 Type D Groove (M1)
25	EN 1092-1 Type E Spigot (M1)
26	EN 1092-1 Type F Recess (M1)

*) flow direction indicated by an arrow on the body
** Class 300 body f-to-f acc. to ASME B16.10, table 2, short pattern

Note: M2-series.
Seat supported, NPS 01"-06", cl. 150/300, acc. to B16.10, long pattern
Seat supported, NPS 08"-12", cl. 150, acc. to B16.10, table 1, long pattern
Seat supported, NPS 08"-12", cl. 300, acc. to B16.10, table 2, short pattern
Trunnion mounted, NPS 10"-16", cl. 150/300, acc. to B16.10 long pattern