SLAB GATE VALVES, CLASS 150

THE ENERGY CONTROLLERS

WALWORTH Slab Gate Valves also named “Through Conduit Gate Valve” are manufactured and tested in accordance with the API-6D standard. This type of valve is very useful in transportation pipe lines for gas, crude oil and oil products. The Slab Gate Valve is through conduit and piggable. Slab Gate Valve has been designed to minimize pressure drop and catch foreign materials such as slurries into the disc cavity to keep clean the sealing surface areas.

FULL OPENING THROUGH CONDUIT DESIGN: WALWORTH Slab Gate valve allow the pipeline fluids to flow freely with a minimum of turbulence. In open position, Slab Gate allows the running of pigs, scraper wipers or hot tap cutters through the pipeline with no danger or damage to the internal mechanic components of the valve. Full-flow design keeps line scrapers from becoming stuck into the valve’s bore and prevents metal cuttings from jamming moving parts. Circular bore as per API-6D table 1.

ENERGIZED SEAT FOR POSITIVE SEALING: When the slab-type disc is in the closed position, the seats (one on each side of the gate) are energized to have a tight seal upstream and downstream. The valve seats have a nylon or RPTFE (Reinforced PolyTetraFluoroEtlylene resine) circular insert on their sealing faces. Two elastomer O-rings on the peripherical surfaces of the seats prevent the fluid passing through the seats when the valve is expanded due to pressure. In this way, the sealing action of the O-rings actually increases with fluid pressure.

TIGHT SEALING: WALWORTH Slab Gate Valve uses the resultant force from the pressure line to help to have a mechanical tight sealing downstream side when high differential pressure occurs. Low pressure sealing is achieved by internal springs assisting pushing the seats against the disc to obtain the proper seal.

MAINTENANCE: Slab Gate valves are designed for free maintenance. The combination Chevron-Viton packing in the valve stem can be repacked while the valve is under pressure in open position. Slab Gate valves can be overhauled by trained serviceman or by the manufacturer.

NO LUBRICATING: In normal operating conditions, the Slab Gate valve does not need lubricant to maintain a seal. If damage occurs to sealing members, sealant can be injected as a temporary solution until valve is repaired.

BACKSEAT: Slab Gate Valve is designed with backseat bushing to keep packing chamber isolated for pressure line to permit packaging change. Also a secondary seal inside the packing chamber is included.

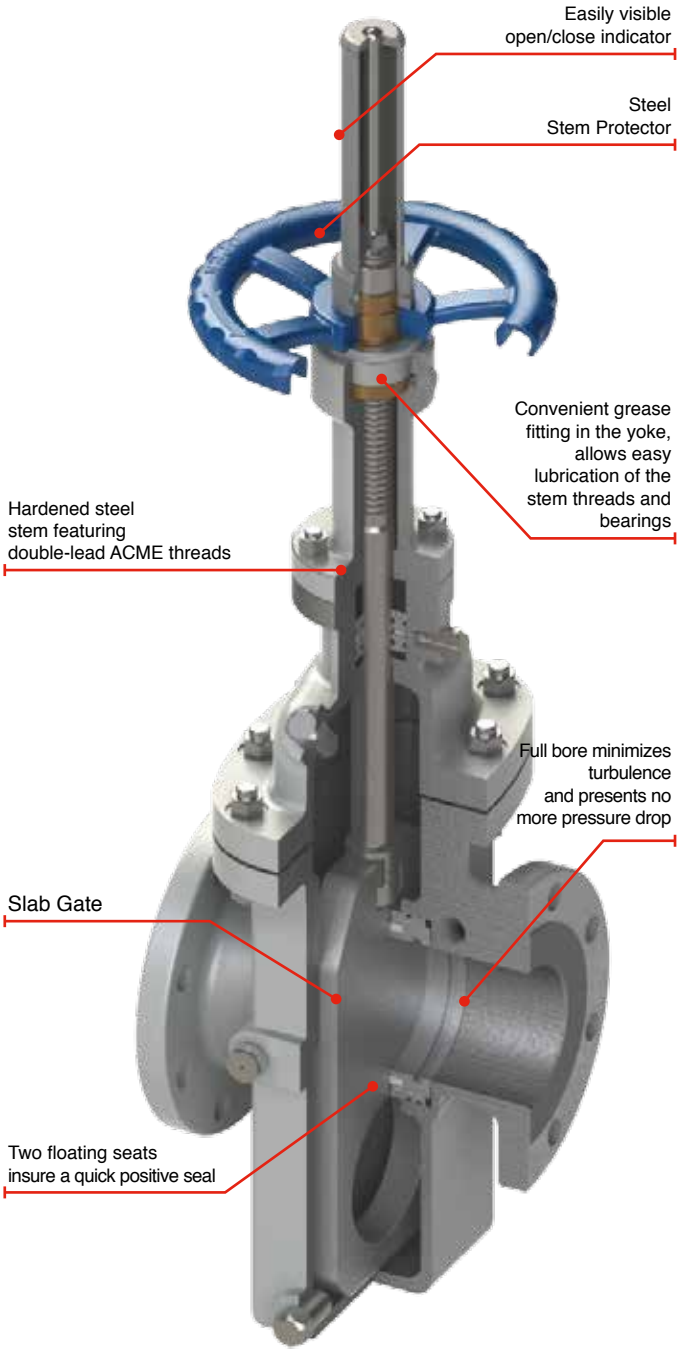

SLAB GATE VALVES, CLASS 150
(HANDWHEEL OPERATED)

DESIGN FEATURES:

- Design in accordance with API-6D
- Rising stem
- Flange dimensions as per ASME B16.5
- For valves 26” and larger, flange dimensions as per ASME B16.47 Series A
- End to end dimensions as per API-6D table 2 and figure 2 (valves not listed in this table as per ASME B16.10)
- WE dimensions as per ASME B31.4 and/or ASME B31.8 and tapered as per ASME B16.25 figure 1
- Full opening
- Size from 2” to 24” Handwheel operated as standard

FIGURE No.	OPERATION	TYPE ON ENDS
1912	Handwheel	RF
1913	Handwheel	RTJ
1914	Handwheel	WE

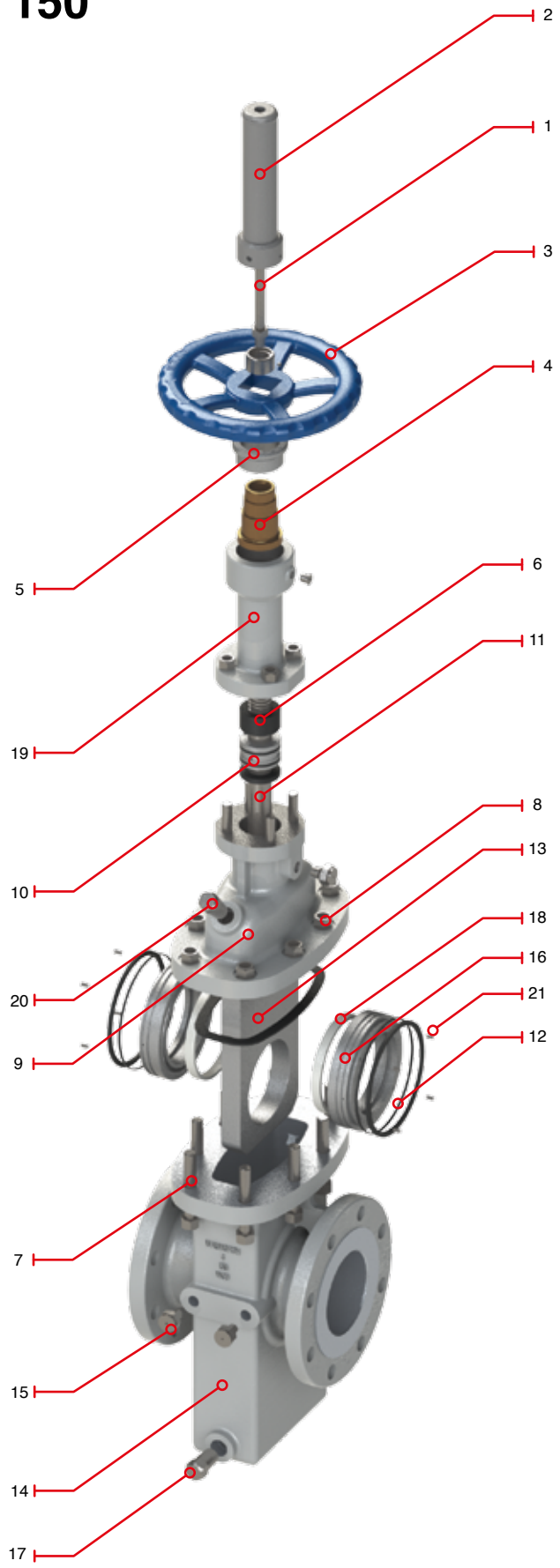

Regular Bill of Materials

No.	Description	Standard Material
1	Indicator Rod	SS 410
2	Stem Protector	CS
3	Handwheel	A197
4	Stem Nut	ASTM A439 D2
5	Thrust Bearing	AISI 1035
6	Stem Packing	Graphite
7	Bolt	ASTM A193 Gr. B7M
8	Nut	ASTM A194 Gr. 2HM
9	Bonnet	ASTM A216 Gr. WCB
10	O-Ring Packing Seat	Viton
11	Stem	ASTM A276 Gr. 410
12	O-Ring	Viton
13	Gate	ASTM A515 Gr. 70 + ENP or ASTM A105N+ ENP
14	Body	ASTM A216 Gr. WCB
15	Sealant Fitting	Cs + Zn
16	Seat	ASTM A105N + ENP
17	Drain Plug	Cs + Zn
18	Seat insert	RPTFE or Nylon
19	Yoke	ASTM A216 Gr. WCB
20	Vent	Cs + Zn
21	Spring	Inconel X-750

SLAB GATE VALVES, CLASS 150
(HANDWHEEL OPERATED)

DESIGN FEATURES:

- Design in accordance with API-6D
- Rising stem
- Flange dimensions as per ASME B16.5
- For valves 26” and larger, flange dimensions as per ASME B16.47 Series A
- End to end dimensions as per API-6D table 2 and figure 2 (valves not listed in this table as per ASME B16.10)
- WE dimensions as per ASME B31.4 and/or ASME B31.8 and tapered as per ASME B16.25 figure 1
- Full opening
- Size from 2” to 24” Handwheel operated as standard

FIGURE No.	OPERATION	TYPE ON ENDS
1912	Handwheel	RF
1913	Handwheel	RTJ
1914	Handwheel	WE

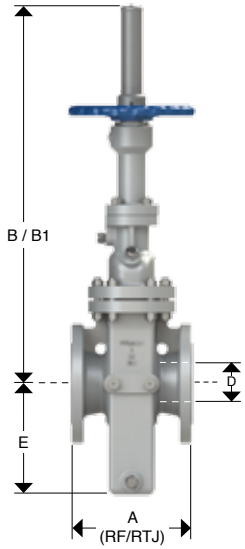

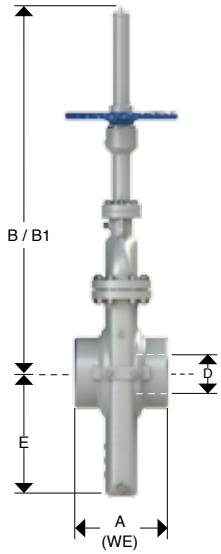

Dimensions

NOM SIZE	in	2”	3”	4”	6”	8”	10”	12”	14”	16”	18”	20”	24”
OPERATION		HW	HW	HW	HW	HW	HW	HW	HW	HW	HW	HW	HW
D	in	1.93	2.91	3.94	5.91	7.91	9.92	11.93	13.15	15.16	17.17	19.17	23.19
	mm	49	74	100	150	201	252	303	334	385	436	487	589
A / RF	in	7.01	7.99	9.02	10.51	11.50	12.99	14.02	15.00	15.98	17.01	17.99	20.00
	mm	178	203	229	267	292	330	356	381	406	432	457	508
A / RTJ	in	7.52	8.50	9.49	10.98	12.01	13.50	14.49	15.51	16.50	17.52	18.50	20.51
	mm	191	216	241	279	305	343	368	394	419	445	470	521
A / WE	in	8.50	11.14	12.01	15.87	16.50	17.99	19.76	22.52	24.02	25.98	27.99	32.01
	mm	216	283	305	403	419	457	502	572	610	660	711	813
B	in	22.44	24.21	29.25	37.48	44.72	55.94	63.58	67.28	75.79	84.25	96.85	110.24
	mm	570	615	743	952	1136	1421	1615	1709	1925	2140	2460	2800
B1	in	25.28	27.87	34.09	44.33	53.78	66.93	76.77	81.57	92.20	102.83	117.72	135.24
	mm	642	708	866	1126	1366	1700	1950	2072	2342	2612	2990	3435
E	in	5.35	7.09	8.39	11.97	15.35	18.50	21.46	23.39	27.17	29.76	35.43	42.91
	mm	136	180	213	304	390	470	545	594	690	756	900	1090
Weight RF	lbs	77.14	110.20	165.30	297.54	462.84	661.20	958.74	1168.12	1498.72	2005.64	2931.32	4452.08
	kg	35	50	75	135	210	300	435	530	680	910	1330	2020
Weight WE	lbs	67.11	95.87	143.81	258.86	402.67	575.24	834.10	1016.26	1303.89	1744.91	2550.25	3873.31
	kg	30.45	43.5	65.25	117.45	182.7	261	378.45	461.1	591.6	791.7	1157.1	1757.4

B = Close Position **B1** = Open Position

SLAB GATE VALVES, CLASS 150
(GEAR OPERATED)

DESIGN FEATURES:

- Design in accordance with API-6D
- Rising stem
- Flange dimensions as per ASME B16.5
- For valves 26” and larger, flange dimensions as per ASME B16.47 Series A
- End to end dimensions as per API-6D table 2 and figure 2 (valves not listed in this table as per ASME B16.10)
- WE dimensions as per ASME B31.4 and/or ASME B31.8 and tapered as per ASME B16.25 figure 1
- Full opening
- Size from 26” to 48” Gear operated as standard

FIGURE No.	OPERATION	TYPE ON ENDS
1922	Gear Operator	RF
1923	Gear Operator	RTJ
1924	Gear Operator	WE

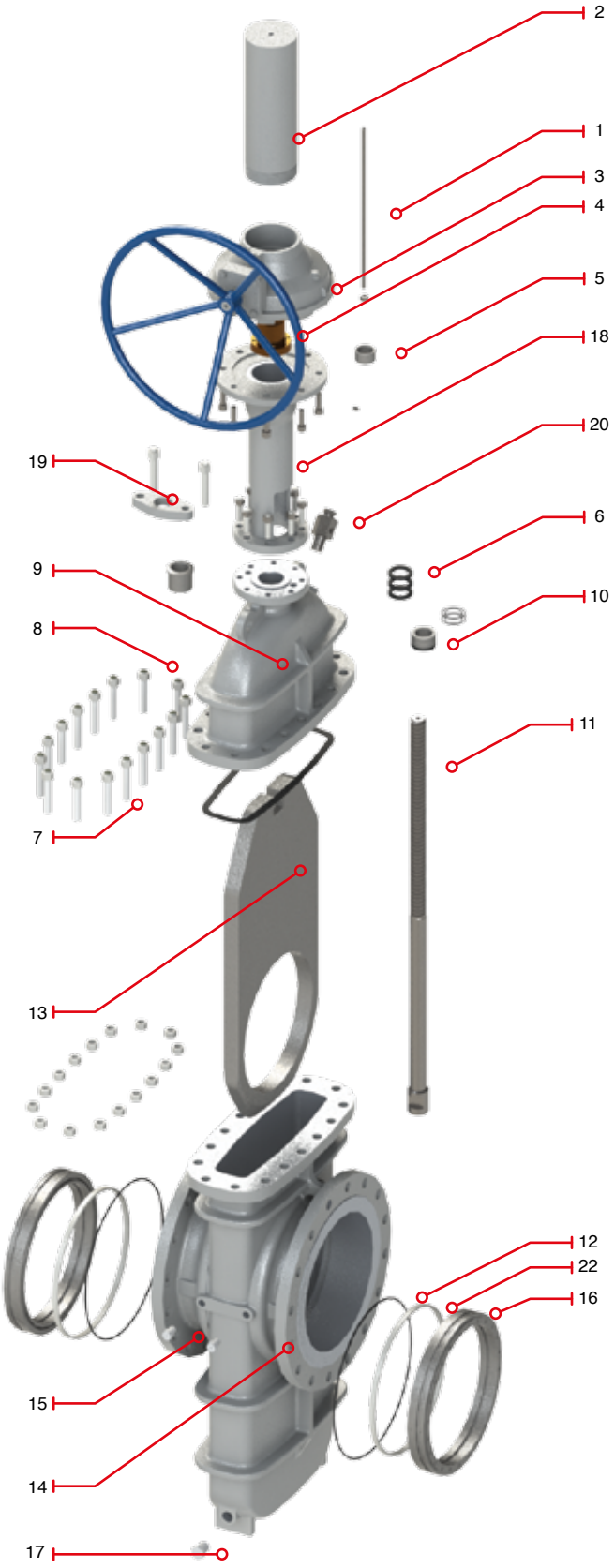

Regular Bill of Materials

No.	Description	Standard Material
1	Indicator Rod	SS 410
2	Stem Protector	CS
3	Gear operator	Commercial Steel
4	Stem Nut	ASTM A439 D2
5	Stop	ASTM A 108 Gr. 1020
6	Stem Packing	Graphite
7	Bolt	ASTM A193 Gr. B7M
8	Nut	ASTM A194 Gr. 2HM
9	Bonnet	ASTM A216 Gr. WCB
10	O-Ring Packing Seat	Viton
11	Stem	ASTM A276 Gr. 410
12	O-Ring	Viton
13	Gate	ASTM A515 Gr.70+ TCC or ASTM A105N+ TCC
14	Body	ASTM A216 Gr. WCB
15	Sealant Fitting	Cs + Zn
16	Seat	ASTM A105N + TCC
17	Drain Plug	Cs + Zn
18	Yoke	ASTM A216 Gr. WCB
19	Gland Flange	CS
20	Vent	Cs + Zn
*21	Springs	Inconel X-750
22	Seat Insert	RPTFE or Nylon

* Not shown

SLAB GATE VALVES, CLASS 150
(GEAR OPERATED)

DESIGN FEATURES:

- Design in accordance with API-6D
- Rising stem
- Flange dimensions as per ASME B16.5
- For valves 26” and larger, flange dimensions as per ASME B16.47 Series A
- End to end dimensions as per API-6D table 2 and figure 2 (valves not listed in this table as per ASME B16.10)
- WE dimensions as per ASME B31.4 and/or ASME B31.8 and tapered as per ASME B16.25 figure 1
- Full opening
- Size from 26” to 48” Gear operated as standard

FIGURE No.	OPERATION	TYPE ON ENDS
1922	Gear Operator	RF
1923	Gear Operator	RTJ
1924	Gear Operator	WE

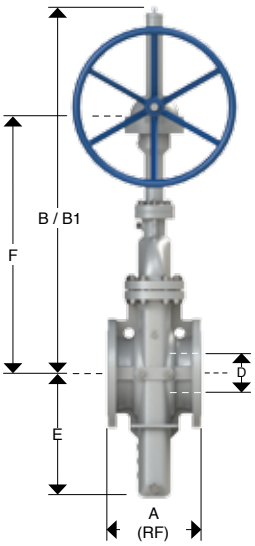

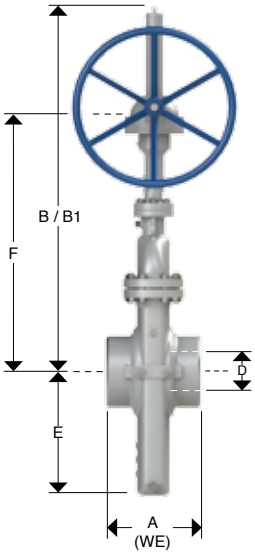

Dimensions

NOM SIZE	in	26”	28”	30”	32”	34”	36”	38”	40”	42”	48”
OPERATION		GO	GO	GO	GO	GO	GO	GO	GO	GO	GO
D	in	24.92	26.93	28.94	30.67	32.68	34.41	36.42	38.43	40.16	45.91
	mm	633	684	735	779	830	874	925	976	1020	1166
A / RF	in	22.01	24.02	25.98	27.99	30.00	32.01	33.31	35.98	37.99	44.02
	mm	559	610	660	711	762	813	846	914	965	1118
A / WE	in	34.02	35.98	35.98	37.99	39.96	40.00	42.01	44.02	45.98	52.01
	mm	864	914	914	965	1015	1016	1067	1118	1168	1321
B	in	121.26	127.17	135.83	144.09	152.76	161.42	166.54	178.74	188.98	204.72
	mm	3080	3230	3450	3660	3880	4100	4230	4540	4800	5200
B1	in	148.23	156.30	166.93	176.77	187.60	198.23	205.31	219.49	231.69	253.35
	mm	3765	3970	4240	4490	4765	5035	5215	5575	5885	6435
E	in	45.87	48.62	51.57	54.33	57.48	59.84	66.93	69.88	76.77	82.68
	mm	1165	1235	1310	1380	1460	1520	1700	1775	1950	2100
F	in	88.07	91.93	98.70	105.20	111.61	118.27	121.50	131.77	138.90	148.66
	mm	2237	2335	2507	2672	2835	3004	3086	3347	3528	3776
Weight RF	lbs	5697.34	6722.20	7934.40	9256.80	10469.00	11240.40	13113.80	15428.00	19174.80	27192.95
	kg	2585	3050	3600	4200	4750	5100	5950	7000	8700	12338
Weight WE	lbs	4956.69	5848.31	6902.93	8053.42	9108.03	9779.15	11409.01	13422.36	16682.08	23657.87
	kg	2248.95	2653.5	3132	3654	4132.5	4437	5176.5	6090	7569	10734.06

B = Close Position **B1** = Open Position