SWING CHECK VALVES

THREADED BONNET, 200 W.O.G.
1/4" - 2" (6 - 50 mm), THREADED
CAST STAINLESS STEEL

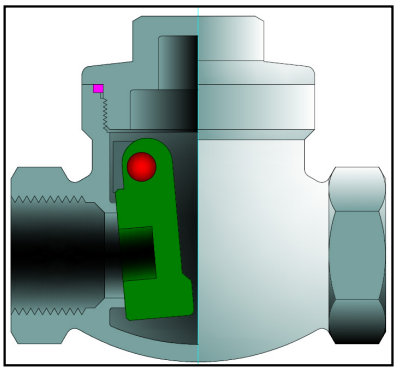

Class	Fig. No.
200 W.O.G.	1847

STANDARD MATERIALS (Other materials available)

PART	MATERIALS
Body	A351 Gr. CF8M
Cap	A351 Gr. CF8M
Disc	A276 316
Gasket	PTFE
Pin	A276 316
Plug	SST 316
Plug Gasket	PTFE
Identification Plate	Series 300 SST

DESIGN FEATURES:

- Integral Seats.
- Each valve is shell and seat pressure tested per industry standard API 598.
- Check valve are suitable for service in horizontal line with cap vertical or in a vertical line with flow upward.
- Threaded ends are NPT type per ASME B1.20.1.

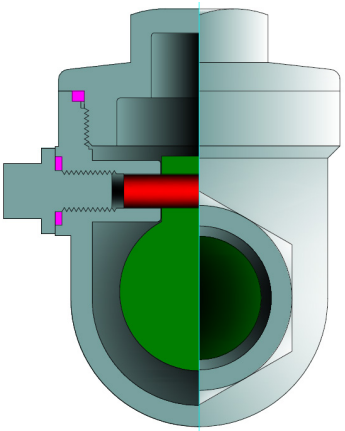

Side view of valve.

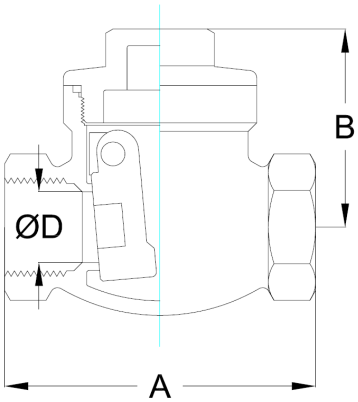

SIZE	200 W.O.G.					
in / mm	A	B	D	WT	lb / kg	C_V
¼	2.50	1.7	0.56	0.7		1.0
6	65	42	15	0.3		
3/8	2.50	1.7	0.56	0.7		2.2
10	65	42	15	0.3		
½	2.50	1.7	0.56	0.7		3.9
13	65	42	15	0.3		
¾	3.13	2.0	0.75	0.9		9.2
19	80	51	20	0.4		
1	3.56	2.4	1.00	1.5		17
25	90	60	25	0.7		
1¼	4.13	2.64	1.25	2.2		27
32	105	67	32	1.0		
1 ½	4.75	3.0	1.56	3.2		40
38	120	75	40	1.5		
2	5.50	3.2	2.00	4.7		75
50	140	81	50	2.1		

B = Center to top

WT = Weight
C_V = Flow coefficient

API 603 WALL SWING CHECK VALVES

BOLTED BONNET, CLASSES 200 - 600
1/4" - 2" (6 - 50 mm), THREADED OR SOCKET WELD ENDS
CAST STAINLESS STEEL

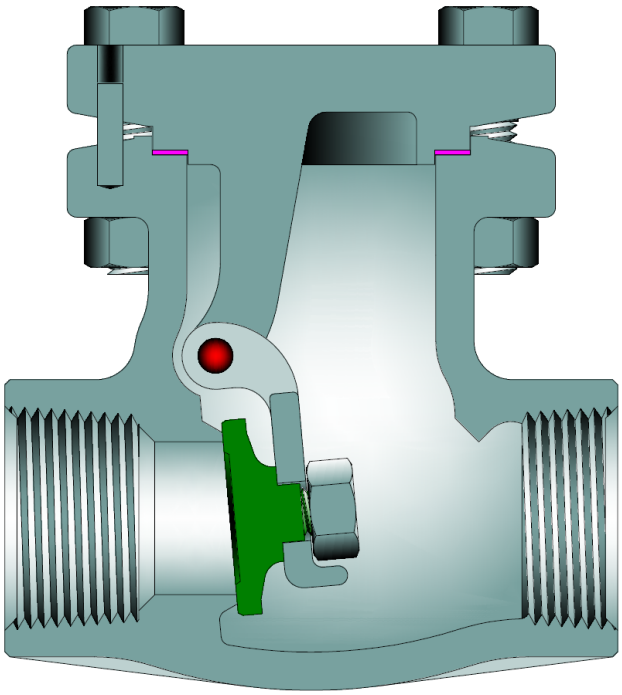

STANDARD MATERIALS (Other materials available)

PART	MATERIALS
Body	A351 Gr. CF3M
Cap	A351 Gr. CF8M
Disc	A276 316
Gasket	PTFE
Carrier	A351 Gr. CF8M
Carrier Pin	A276 316
Disc Nut	SST 316
Body / Cap Stud	A193 Gr. B8
Body / Cap Nut	A194 Gr.8
Locating Pin	SST
Identification Plate	Series 300 SST

Class	Fig. No.
200	2341
300	2346 (1)
600	2350 (1)

1) See pages 22-24 for flanged and butt weld designs.

Design Specifications

Item	Applicable Specification
Wall thickness	API 603 & B16.34
Pressure - temperature ratings	ASME B16.34
General valve design	ASME B16.34
End Threads-NPT	ASME B1.20.1
Socket Weld Ends	ASME B16.11
Materials	ASTM

DESIGN FEATURES:

- Integral Seats.
- Wall thickness per API 603 requirements.
- Swivel disc for improved seat alignment and longer life.
- Each valve is shell and seat pressure tested per industry standard API 598.
- Check valves are suitable for service in horizontal line with cap vertical or in a vertical line with flow upward.
- Carrier Pin is confined within the body wall and is not accessible from the exterior. This eliminates potential leak path with side plug design.
- Disc suspended from valve cap and without side plugs.
- Cap has a male and female joint.
- Each valve has a unique certification number that is traceable to the valve certification sheet which includes MTR data, pressure test, inspection result and certificate of conformance.
- Other available options as follows:
  - » Alternate valve materials
  - » Alternate trim materials
  - » NACE service
  - » Special cleaning for applications such as oxygen or chlorine

NOTE: Powell reserves the right to convert threaded ends to socket weld, which will result in thread remnants as pipe stop.

SWING CHECK VALVE DIMENSIONS (CLASSES 200 - 600)

SIZE	ASME 200						ASME 300					
in / mm	A	B	D	WT	lb / kg	C_V	A	B	D	WT	lb / kg	C_V
¼	2.75	2.2	0.44	2.1		3.0	2.75	2.2	0.44	2.1		3.0
6	70	55	11	1.0			70	55	11	1.0		
3/8	2.75	2.2	0.44	2.1		3.0	2.75	2.2	0.44	2.1		3.0
10	70	55	11	1.0			70	55	11	1.0		
½	2.75	2.2	0.44	2.1		3.0	2.75	2.2	0.44	2.1		3.0
13	70	55	11	1.0			70	55	11	1.0		
¾	3.75	3.0	0.75	3.3		9.2	3.75	3.0	0.75	4.4		9.2
19	95	76	19	1.5			95	76	19	2.0		
1	4.00	3.4	1.00	4.9		17	4.00	3.4	1.00	6.1		17
25	102	86	25	2.2			102	86	25	2.8		
1¼	4.75	3.4	1.25	7.3		27	4.75	3.4	1.25	8.5		27
32	121	86	32	3.3			121	86	32	3.9		
1½	5.50	4.1	1.50	10.6		40	5.50	4.1	1.50	10.6		40
38	140	103	38	4.8			140	103	38	4.8		
2	6.00	4.6	2.00	15.5		75	6.00	4.6	2.00	15.5		75
50	152	116	51	7.0			152	116	51	7.0		

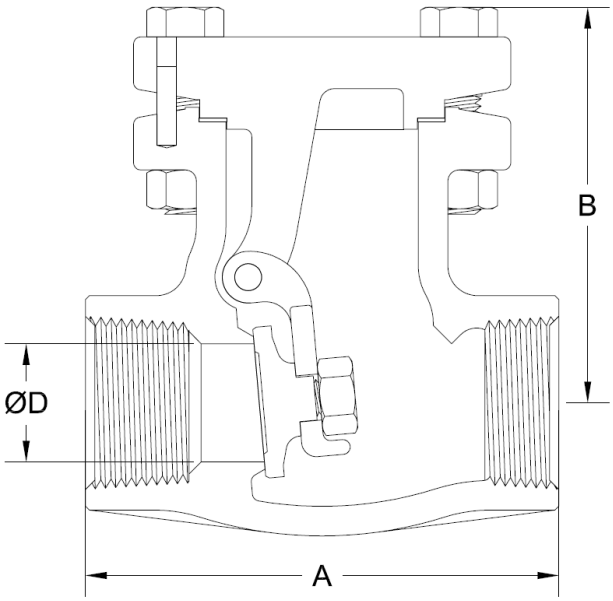

B = Center to top

WT = Weight
C_V = Flow coefficient

SIZE	ASME 600					
in / mm	A	B	D	WT	lb / kg	C_V
¼	2.75	2.3	0.44	7.0		3.0
6	70	58	11	3.2		
3/8	2.75	2.3	0.44	7.0		3.0
10	70	58	11	3.2		
½	2.75	2.3	0.44	7.0		3.0
13	70	58	11	3.2		
¾	3.75	3.1	0.75	8.5		9.2
19	95	79	19	3.9		
1	4.00	3.5	1.00	11.0		17
25	102	90	25	5.0		
1¼	4.75	3.5	1.25	13.2		27
32	121	90	32	6.0		
1½	5.63	4.3	1.50	14.6		40
38	143	108	38	6.6		
2	6.25	5.4	2.00	35.0		75
50	159	138	51	15.9		

Powell Valves
2503 Spring Grove Ave.
Cincinnati, OH 45214
Phone: 513-852-2000
Fax: 513-852-2997

API 603 WALL SWING CHECK VALVES
BOLTED BONNET, CLASSES 150-600
FLANGED AND BUTTWELD ENDS
CAST STAINLESS STEEL

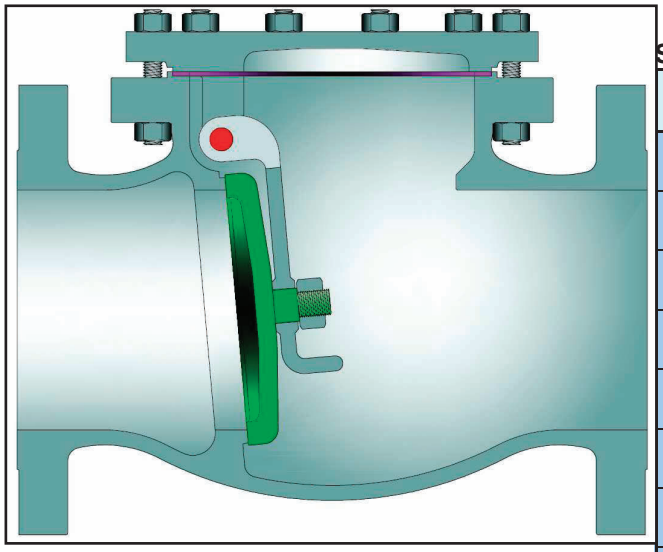

Class	Figure Number
150	2342
300	2346 (3)
600	2350 (3)

STANDARD MATERIALS (Other materials available)

PART	MATERIALS
Body	A351 Gr. CF8M (2)
Cap	A351 Gr. CF8M
Disc	A276 316
Gasket	PTFE
Carrier	A351 Gr. CF8M
Carrier Pin	A276 316
Disc Nut	SST 316
Disc Carrier Hanger (1)	A351 Gr. CF8M
Disc Carrier Hanger Bolts (1)	A193 Gr. B8
Body / Cap Stud	A193 Gr. B8
Body / Cap Nut	A194 Gr.8
Identification Plate	Series 300 SST

DESIGN FEATURES:

- **Integral Seats**, however, renewable screwed-in seat rings are available on order.
- **Wall** thickness per API 603 requirements.
- **Swivel disc** for improved seat alignment and longer life.
- **Each** valve is shell and seat pressure tested per industry standard API 598.
- **Check** valve are suitable for service in horizontal line with cap vertical or in a vertical line with flow upward.
- **Carrier Pin** is confined within the body wall and is not accessible from the exterior reducing potential leak points.
- **End Flanges** have the following raised faces per ASME B16.5:
  Classes 150-300: 1/16" (2mm).
  Classes 600-1500: 1/4" (7mm).
- **Weld** ends are available per ASME B16.25 or per customer's specification.
- **Each** valve has a unique certification number that is traceable to the valve certification sheet which includes MTR data, pressure test, inspection result and certificate of conformance.
- **Thicker** walled API 600 design available.

(1) 10" Valve size and up have a hanger design as shown below.
(2) CF3M for weld end bodies.
(3) See pages 20-21 for 2" and smaller sizes with threaded or socket weld ends.

Design Specifications

Item	Applicable Specification
Wall thickness	API 603 & B16.34
Pressure - temperature ratings	ASME B16.34
General valve design	B16.34
End to End dimensions	ASME B16.10
Flange design	ASME B16.5
Butt Weld design	ASME B16.25
Materials	ASTM

- **Other** available options as follows:
  -Alternate valve materials such as chrome and stainless steel alloys
  -Alternate trim materials
  -Bypass, drain and other auxiliary connections
  -NACE service
  -Special cleaning for applications such as oxygen or chlorine
  -Other options available as specified

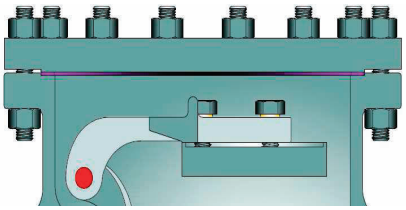

Valve design for valve sizes 10" and above all classes.

SWING CHECK VALVE DIMENSIONS (CLASS 150—600).

SIZE	ASME 150				ASME 300				ASME 600			
in / mm	A	B	C	D	A	B	C	D	A	B	C	D
½	4.25	2.2	2.4	0.50	6.00	2.2	2.4	0.50	6.50	2.3	2.4	0.50
13	108	55	61	13	152	55	61	13	165	58	61	13
¾	4.62	3.0	2.8	0.75	7.00	3.0	2.8	0.75	7.50	3.1	2.8	0.75
20	117	76	70	19	178	76	70	19	190	79	70	19
1	5.00	3.4	3.2	1.00	8.50	3.4	3.2	1.00	8.50	3.5	3.2	1.00
25	127	86	81	25	216	86	81	25	216	90	81	25
1½	6.50	4.1	4.2	1.50	9.50	4.1	4.2	1.50	9.50	4.3	4.2	1.50
38	165	103	106	38	241	103	106	38	241	108	106	38
2	8.00	4.6	4.6	2.00	10.50	4.6	4.6	2.00	11.50	5.4	6.5	2.00
50	203	116	117	51	267	116	117	51	292	138	165	51
2½	8.50	5.6	5.9	2.50	11.50	5.6	5.9	2.50	13.00	7.4	7.9	2.50
65	216	142	151	170	292	142	151	170	330	189	200	64
3	9.50	5.8	6.8	3.00	12.50	5.8	6.8	3.00	14.00	8.3	8.5	3.00
80	241	148	171	192	318	148	171	192	356	212	215	76
4	11.50	6.5	7.4	4.00	14.00	6.5	7.4	4.00	17.00	10.3	10.6	4.00
100	292	165	189	213	356	164	189	213	432	262	270	102
6	14.00	8.2	10.0	6.00	17.50	8.6	10.0	6.00	22.00	14.0	13.5	6.00
150	356	208	254	273	444	218	254	299	559	356	342	152
8	19.50	10.1	13.8	8.00	21.00	10.7	13.8	8.00	26.00	18.5	17.1	7.88
200	495	257	349	349	533	273	349	375	660	469	435	200
10	24.50	14.2	17.8	10.00	24.50	15.3	18.5	10.00	31.00	21.2	20.1	9.75
250	622	359	451	451	622	388	470	470	787	539	510	248
12	27.50	15.6	20.5	12.00	28.00	17.9	22.3	12.00	33.00	23.4	22.6	11.75
300	698	397	521	521	711	455	565	305	838	594	575	298
14	31.00	16.3	20.9	13.25	33.00	23.4	21.7	13.25	35.00	25.4	23.5	12.88
350	787	413	532	337	838	595	550	337	889	645	598	327
16	34.00	23.7	25.3	15.25	34.00	24.9	27.4	15.25	39.00	28.6	27.6	14.75
400	864	602	642	387	864	632	695	387	991	727	700	375
18	38.50	27.9	29.6	17.25	38.50	28.5	30.4	17.00	43.00	32.5	29.1	16.50
450	978	709	752	438	978	723	772	432	1092	826	740	419
20	38.50	26.7	27.0	19.25	40.00	24.9	29.1	19.00	47.00	31.6	32.3	18.25
500	978	679	685	489	1016	632	738	483	1194	802	820	464
24	51.00	33.5	36.0	23.25	53.00	34.8	37.6	23.00	55.00	40.2	39.4	22.00
600	1295	852	915	591	1346	884	955	584	1397	1020	1000	559

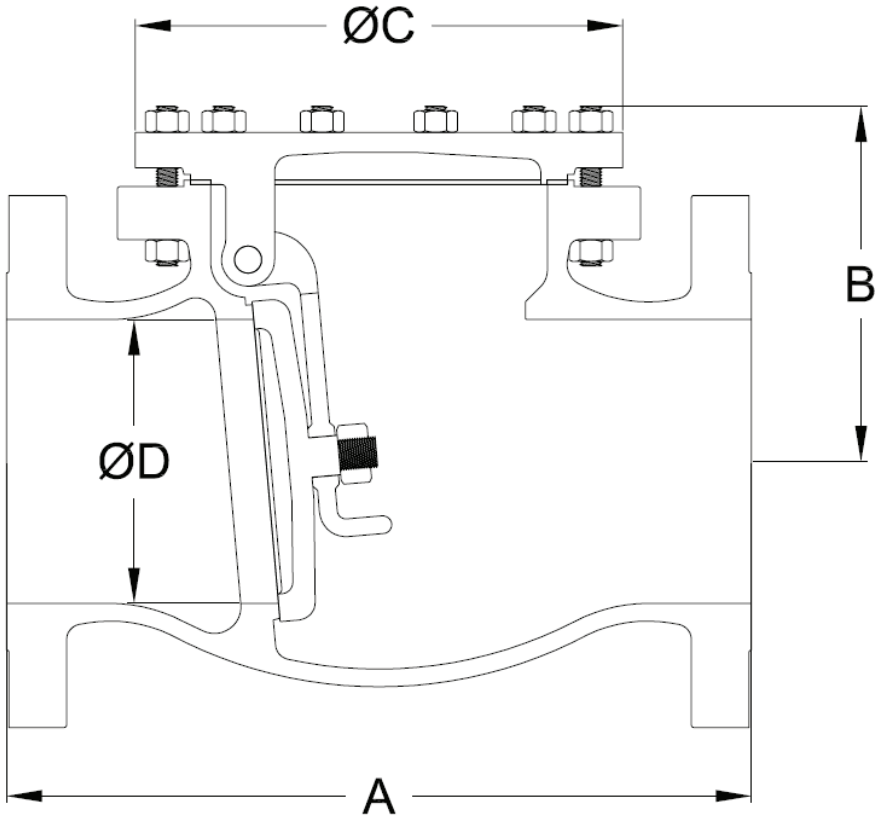

WE = Butt weld
FE = Flanged

B = Center to top

API 603 SWING CHECK VALVES
BOLTED BONNET, CLASSES 150-600
FLANGED AND BUTTWELD ENDS
CAST STAINLESS STEEL

SIZE	ASME 150							ASME 300							ASME 600						
in	F	in	WT	lb	WT	lb	C_V	F	in	WT	lb	WT	lb	C_V	F	in	WT	lb	WT	lb	C_V
mm		mm	FE	kg	WE	kg			mm	FE	kg	WE	kg			mm	FE	kg	WE	kg	
½	3.8		3.6		2.1		3.9	4.1		7.0		2.1		3.9	4.1		9.1		2.8		3.9
13	97		1.6		1.0			104		3.2		1.0			104		4.1		1.3		
¾	5.4		5.3		3.3		9.2	5.8		12.5		3.3		9.2	5.8		14.9		5.2		9.2
20	137		2.4		1.5			147		5.7		1.5			147		6.8		2.4		
1	6.2		7.5		4.9		17	6.3		18.0		4.9		17	6.5		23.8		6.6		17
25	157		3.4		2.2			160		8.2		2.2			165		10.8		3.0		
1½	7.3		14.6		10.6		40	7.5		30.0		10.6		40	7.8		40.0		14.5		40
38	185		6.6		4.8			191		13.6		4.8			198		18.1		6.6		
2	8.4		24.0		15.5		75	8.7		39.0		15.5		75	9.6		52.4		34.7		75
50	213		10.9		7.0			221		17.7		7.0			244		23.8		15.7		
2½	10.1		33		30		120	10.3		45		34		120	13.1		79		62		120
65	257		17		15			262		22		17			333		36		28		
3	11.0		38		37		175	11.2		73		52		175	14.8		110		79		175
80	279		19		18			284		36		26			376		50		36		
4	12.3		69		51		315	12.6		92		69		315	18.4		215		168		315
100	312		34		25			320		46		34			467		98		76		
6	15.9		119		94		760	16.2		172		124		760	23.8		439		335		760
150	404		59		46			411		85		61			605		199		152		
8	19.0		229		178		1390	19.7		365		273		1390	26.5		811		633		1350
200	483		113		88			500		180		135			673		368		287		
10	25.2		448		348		2175	25.8		759		577		2175	31.1		1343		1047		2070
250	640		221		172			655		375		285			790		609		475		
12	28.6		648		504		3250	30.1		1160		1077		3250	35.4		1702		1363		3120
300	726		320		249			765		526		488			899		772		618		
14	31.5		979		834		3960	37.0		1411		1241		3960	38.6		1958		1585		3740
350	800		444		378			940		640		563			980		888		719		
16	40.1		1438		1250		5250	42.3		1764		1550		5250	44.0		2994		2364		4910
400	1019		652		567			1074		800		703			1118		1358		1072		
18	47.2		1927		1656		6990	48.9		2578		2192		6790	50.7		3449		2932		6400
450	1199		874		751			1242		1169		994			1288		1564		1330		
20	49.4		1771		1522		8700	52.5		2913		2505		8480	53.1		4792		4121		7800
500	1255		803		690			1334		1321		1136			1349		2174		1869		
24	57.7		3559		3062		12700	60.4		5204		4428		12400	62.5		7608		6467		11400
600	1466		1614		1388			1534		2360		2008			1588		3451		2933		

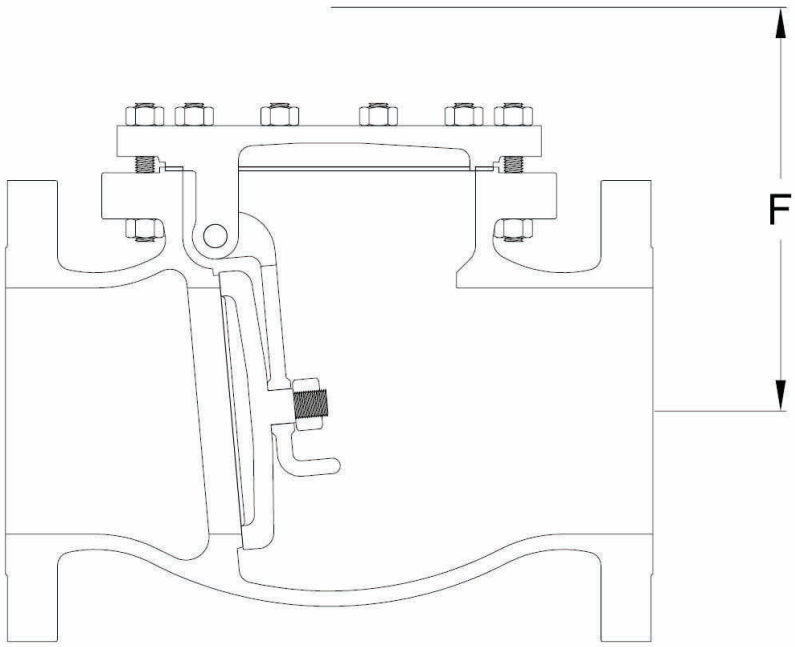

FE = Flanged ends
WE = Weld ends

F = Dismantling Dimension

WT = Weight
C_V = Flow coefficient