HIGH PERFORMANCE BUTTERFLY VALVE

LCS-6822 (Class 150)
LCS-7822 (Class 300)

NSF 61/372
Class 150/300

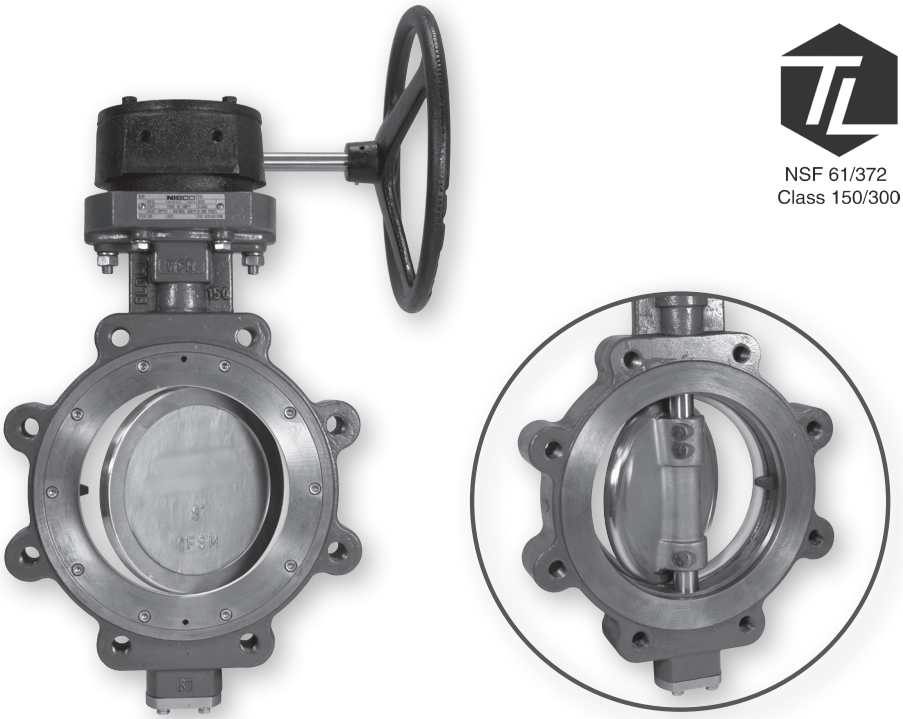

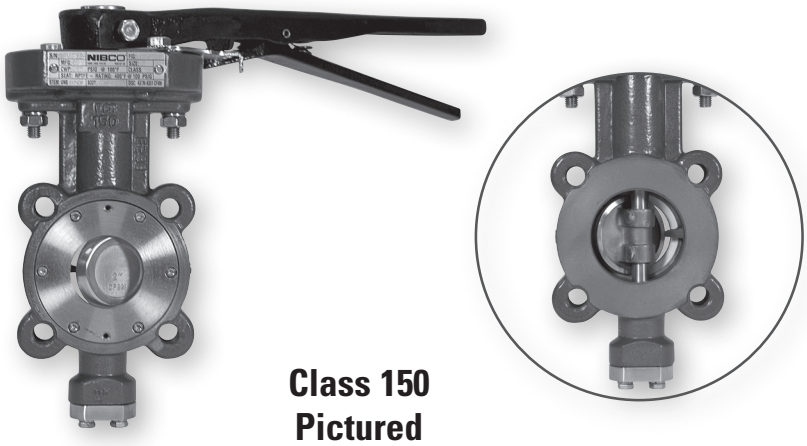

Class 150 Pictured

APPLICATIONS

Ideally suited for commercial, industrial, and mechanical HVAC services. Use in other applications must be approved by the manufacturer

- Heating hot water
- Condenser water
- Glycol
- Chilled water
- Compressed air
- Steam rated - 2" - 12" 150 psi for on/off applications and 50 psi modulating
- Vacuum to 27" Hg
- Chemical process
- Isolation and throttling
- Domestic water

MATERIALS & CONSTRUCTION

- Body constructed of carbon steel
- Stainless steel disc and stem
- Seats of reinforced PTFE for exceptional chemical and heat resistance
- Welded disc pins
- Silicon is not used in the manufacture of this valve

DESIGN CRITERIA

- MSS SP-68 (Design)
- MSS SP-25 (Markings)
- API-609 Seat pressure/temperature ratings/blow-out proof stem
- ASME/ANSI B16.34A, body pressure/temperature ratings
- ASME/ANSI B16.5 flange dimensions
- ISO 5211, actuator mounting top works
- ANSI Class 150 and Class 300
- Dual offset design

FEATURES

- Powder coated epoxy finish
- One-piece stem
- Direct mount actuation
- Live loaded adjustable packing with unique flush-mounted packing gland
- Integrally cast disc-stop
- Dual offset design
- Blow-out proof stem
- Uni-directional dead end service (Arrow on body indicates flow direction)
- Maximum operating temperature 400°F at 100 psi
- 100% production tested per MSS SP-68

⚠ **WARNING:** This product can expose you to chemicals including lead, which is known to the State of California to cause cancer and birth defects or other reproductive harm. For more information go to www.P65Warnings.ca.gov.

Visit our website for the most current information.

High Performance Butterfly Valve Series 6822 & 7822

Carbon Steel Body • Stainless Steel Disc and Stem • ISO 5211 Actuation Mounting

NSF/ANSI 61

CLASS 150 - SIZES 2" THROUGH 30"
CLASS 300 - SIZES 2" THROUGH 24"

ANSI Class 150 & 300

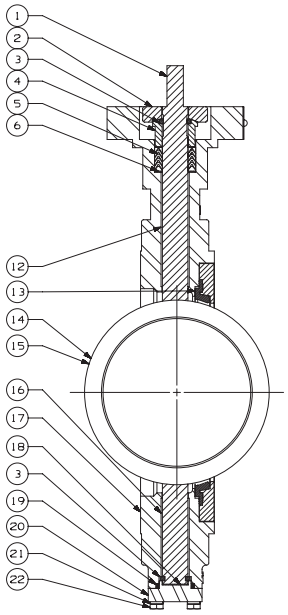

MATERIAL LIST

PART	SPECIFICATION
1. Stem	Stainless Steel UNS ASTM A564 UNS S17400
2. Flange, Gland	Stainless Steel ASTM A351 Grade CF8M
3. Retainer, Stem (4)	Stainless Steel ASTM A276 UNS S31600
4. Gland, Packing	Stainless Steel ASTM A276 UNS S31600
5. Packing (set)	PTFE
6. Retainer, Packing	Stainless Steel ASTM A276 UNS S31600
7. Lockwasher (2)	Stainless Steel Type 304 18-8
8. Nut (2)	Stainless Steel Type 304 18-8
9. Stud (2)	Stainless Steel Type 304 18-8
10. Screw, SHCS	Stainless Steel Type 304 18-8
11. Retainer, Seat	Stainless Steel ASTM A276 UNS S31600
12. Bushing, Upper	Stainless Steel Type 304 PTFE Coated
13. Seat	PTFE 15% Glass Reinforced
14. Disc	Stainless Steel ASTM A351 Grade CF8M
15. Pin, Disc (2)	Stainless Steel ASTM A276 UNS S31600
16. Bushing, Lower	Stainless Steel TYPE 304 PTFE Coated
17. Body	Carbon Steel ASTM A216 GRADE WCB
18. Disc, Spacer	Stainless Steel ASTM A240 UNS S31600
19. Seal, Lower	PTFE
20. Cap, Body	Stainless Steel ASTM A351 Grade CF8M
21. Lockwasher (4)	Stainless Steel Type 304 18-8
22. Screw, Hex (4)	Stainless Steel Type 304 18-8
23. Handle Assembly	Mallable Iron (shown separately)
24. Plate, Throttle	Steel, Plated (shown separately)
25. Screw, Hex	Carbon Steel, Plated (shown separately)
26. Lockwasher	Carbon Steel, Plated (shown separately)
27. Key	Carbon Steel ASTM A108 Grade 1045
28. ID Plate	Stainless Steel

NOTE: For severe steam applications, contact NIBCO Technical Services.
NOTE: If valve is installed opposite the flow arrow for dead end service a downstream flange is required.

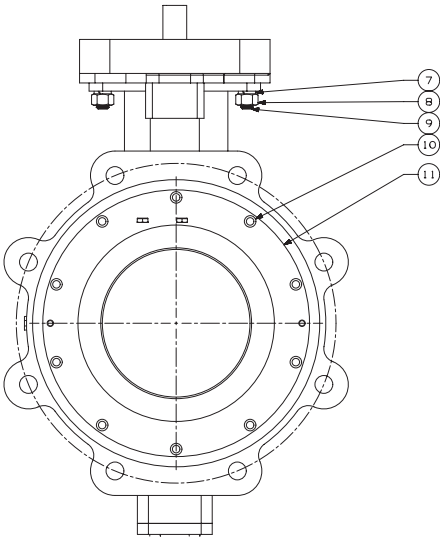

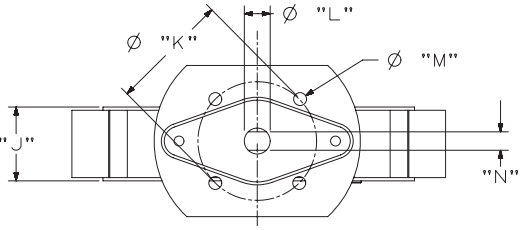

2" - 8" Class 150 Valves
2" - 6" Class 300 Valves

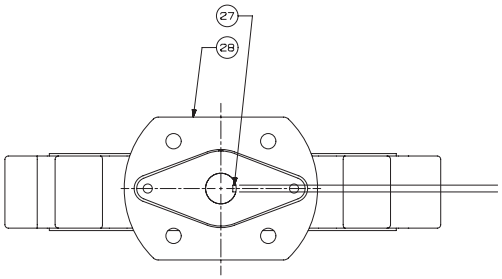

10" - 30" Class 150 Valves
8" - 24" Class 300 Valves

Visit our website for the most current information.

WARNING: Cancer and Reproductive Harm - www.P65Warnings.ca.gov.

High Performance Butterfly Valve Series 6822

SIZES 2" THROUGH 30"

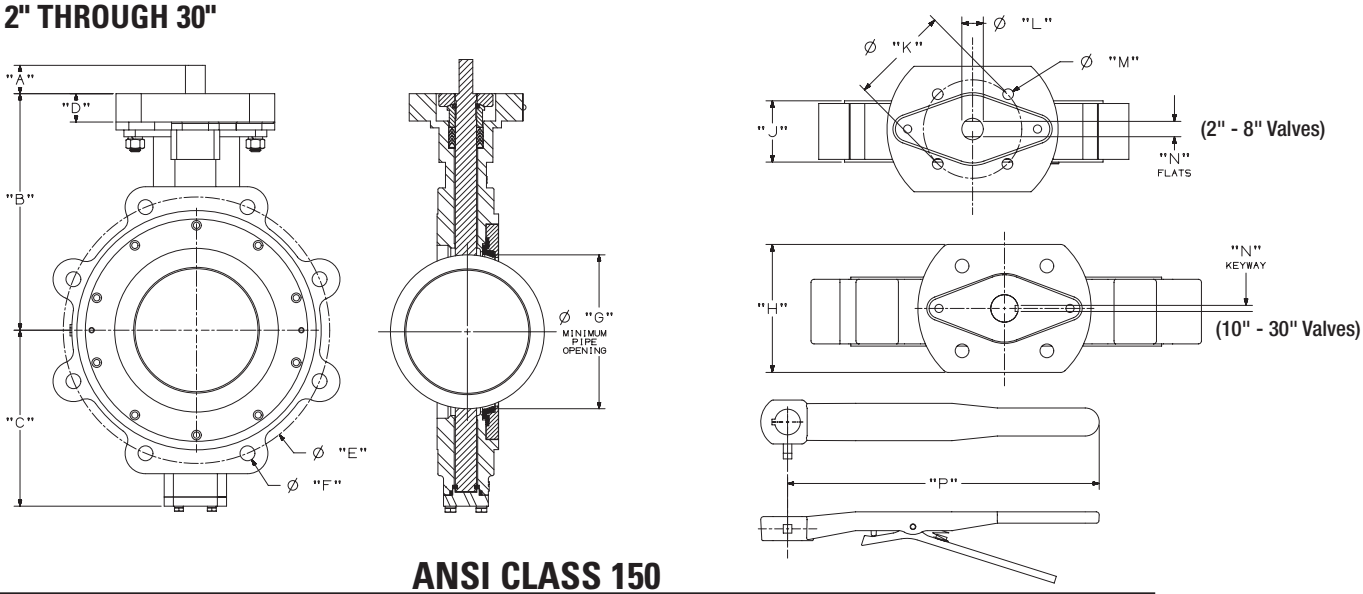

ANSI CLASS 150

DIMENSIONS — WEIGHTS

Valve Size	Gear Operator Mounting	A In.	A mm	B In.	B mm.	C In.	C mm.	D In.	D mm.	E In.	E mm.	F Threads	G In.	G mm.
2"	F07	1.25	31.75	5.78	146.8	3.94	100.1	1.25	31.8	4.75	120.65	4 X 5/8"-11 UNC	1.68	42.7
2½"	F07	1.25	31.75	6.49	164.8	4.06	103.1	1.25	31.8	5.50	139.70	4 X 5/8"-11 UNC	2.24	56.9
3"	F07	1.25	31.75	6.77	172.0	4.37	111.0	1.25	31.8	6.00	152.40	4 X 5/8"-11 UNC	2.72	69.1
4"	F07	1.25	31.75	6.98	177.3	4.80	121.9	1.25	31.8	7.50	190.50	8 X 5/8"-11 UNC	3.38	85.9
5"	F07	1.25	31.75	8.39	213.1	6.38	162.1	1.25	31.8	8.50	215.90	8 X 3/4"-10 UNC	4.48	113.8
6"	F07	1.25	31.75	8.71	221.2	5.97	151.6	1.25	31.8	9.50	241.30	8 X 3/4"-10 UNC	5.34	135.6
8"	F10	1.25	31.75	10.43	264.9	7.76	197.1	1.60	40.6	11.75	298.45	8 X 3/4"-10 UNC	7.28	184.9
10"	F12	2.00	50.80	11.81	300.0	8.61	218.7	1.00	25.4	14.25	361.95	12 X 7/8"-9 UNC	9.13	231.9
12"	F12	2.00	50.80	12.80	325.1	10.63	270.0	1.00	25.4	17.00	431.80	12 X 7/8"-9 UNC	10.68	271.3
14"	F12	2.25	57.15	16.03	407.2	11.68	296.7	1.00	25.4	18.75	476.25	12 X 1"-8 UNC	12.14	308.4
16"	F16	3.00	76.20	16.73	424.9	13.78	350.0	1.88	47.8	21.25	539.75	16 X 1"-8 UNC	13.98	355.1
18"	F16	3.00	76.20	17.72	450.1	14.76	374.9	1.88	47.8	22.75	577.85	16 X 1-1/8"-8 UN*	16.18	411.0
**20"	F16	3.00	76.20	18.94	481.1	16.43	417.3	2.00	50.8	25.00	635.00	20 X 1-1/8"-8 UN*	18.13	460.5
**24"	F16/F25	4.00	101.60	23.23	590.0	19.37	492.0	2.50	63.5	29.50	749.30	20 X 1-1/4"-8 UN*	21.17	537.7
**30"	F25	5.33	135.38	26.90	683.3	24.24	615.7	3.00	76.2	36.00	914.4	28 X 1-¼"8 UN*	26.87	682.5

*SPECIAL PITCH CAP SCREW THREAD REQUIRED PER MSS SP-68 SPECIFICATIONS.
**SHORT SCREWS REQUIRED FOR BLIND TAPPED HOLES NEAREST TO STEM FOR 20" AND LARGER VALVES. SEE INSTALLATION, OPERATION & MAINTENANCE GUIDE II FOR SERIES 6822 & 7822.

Valve Size	H In.	H mm.	J In.	J mm.	K In.	K mm.	L In.	L mm.	M In.	M mm.	N In.	N mm.	P In.	P mm.	Valve Wt. Lbs.	Valve Wt. Kg.	Operating Torque at 285 psi In.-Lbs.	Operating Torque at 285 psi N-m
2"	4.15	105.4	1.69	42.93	2.76	70.10	0.500	12.700	0.37	9.40	0.375	9.525	13.75	349.3	12.5	6	290	33
2½"	4.15	105.4	1.84	46.74	2.76	70.10	0.625	15.875	0.37	9.40	0.438	11.125	13.75	349.3	16	7	320	36
3"	4.15	105.4	1.88	47.75	2.76	70.10	0.625	15.875	0.37	9.40	0.438	11.125	13.75	349.3	18	8	350	40
4"	4.15	105.4	2.12	53.85	2.76	70.10	0.625	15.875	0.37	9.40	0.438	11.125	13.75	349.3	31	14	510	58
5"	4.15	105.4	2.25	57.15	2.76	70.10	0.750	19.050	0.37	9.40	0.500	12.700	13.75	349.3	38	17	725	82
6"	4.15	105.4	2.25	57.15	2.76	70.10	0.750	19.050	0.37	9.40	0.500	12.700	13.75	349.3	44	20	845	95
8"	5.12	130.0	2.50	63.50	4.02	102.11	0.875	22.225	0.44	11.18	0.625	15.875	—	—	68	31	1430	162
10"	5.25	133.4	2.83	71.88	4.92	124.97	1.125	28.575	0.56	14.22	1/4" X 1/4"		—	—	104	47	2400	271
12"	5.25	133.4	3.19	81.03	4.92	124.97	1.125	28.575	0.56	14.22	1/4" X 1/4"		—	—	148	67	3650	412
14"	5.25	133.4	3.62	91.95	4.92	124.97	1.375	34.925	0.56	14.22	5/16" X 5/16"		—	—	201	91	6000	678
16"	6.50	165.1	4.00	101.60	6.50	165.10	1.875	47.625	0.81	20.57	3/8" X 1/2"		—	—	309	140	8800	994
18"	6.50	165.1	4.50	114.30	6.50	165.10	1.875	47.625	0.81	20.57	3/8" X 1/2"		—	—	346	157	11500	1299
20"	6.50	165.1	5.00	127.00	6.50	165.10	2.125	53.975	0.81	20.57	1/2" X 1/2"		—	—	426	194	16500	1864
24"	11.02	279.9	6.06	153.92	6.50	165.10	2.555	64.897	0.81	20.57	3/4" X 1/2"		—	—	675	307	24600	2779
30"	11.25	285.8	7.51	190.75	10.00	254.00	3.142	79.807	0.69	15.53	.866 X .788		—	—	1026	466	37175	4200

WARNING: Cancer and Reproductive Harm - www.P65Warnings.ca.gov.

Visit our website for the most current information.

High Performance Butterfly Valve Series 7822

SIZES 2" THROUGH 24"

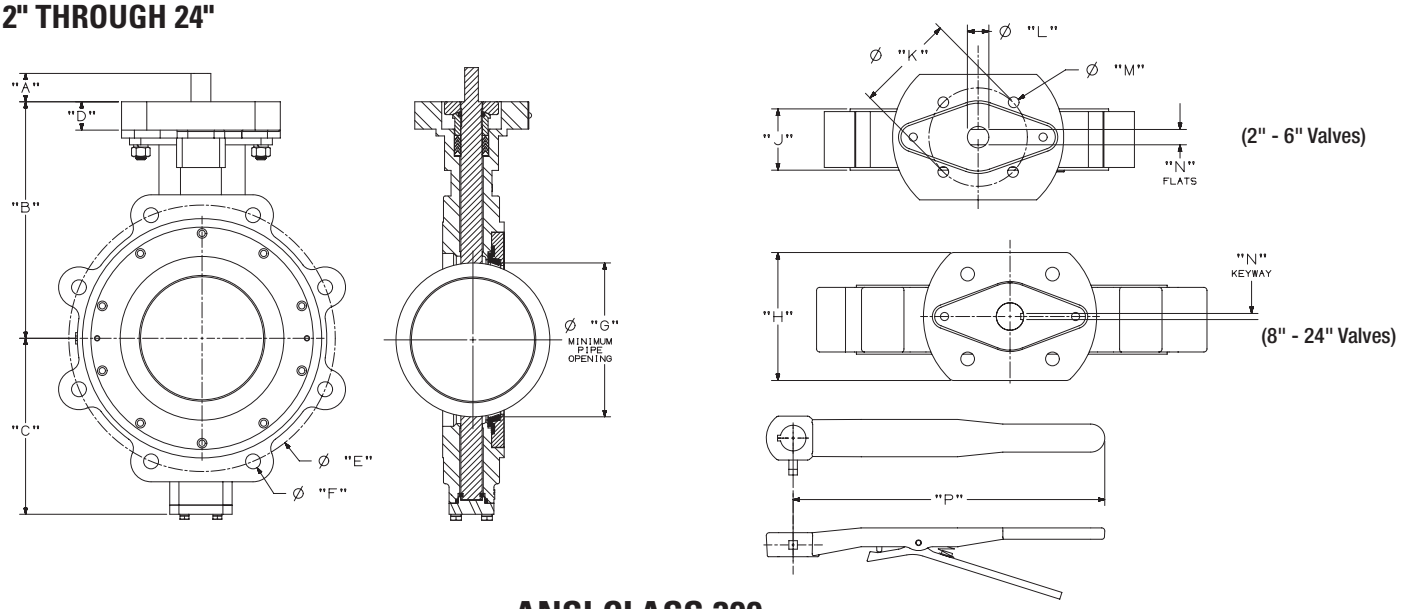

ANSI CLASS 300

DIMENSIONS — WEIGHTS

Valve Size	Gear Operator Mounting	A In.	A mm	B In.	B mm.	C In.	C mm.	D In.	D mm.	E In.	E mm.	F Threads	G In.	G mm.
2"	F07	1.25	31.75	5.78	146.8	3.94	100.1	1.25	31.8	5.00	127.00	8 X 5/8"-11 UNC	1.68	42.7
2½"	F07	1.25	31.75	6.49	164.8	4.06	103.1	1.25	31.8	5.88	149.35	8 X 3/4"-10 UNC	2.24	56.9
3"	F07	1.25	31.75	6.77	172.0	4.37	111.0	1.25	31.8	6.62	168.15	8 X 3/4"-10 UNC	2.72	69.1
4"	F07	1.25	31.75	6.98	177.3	4.80	121.9	1.25	31.8	7.88	200.15	8 X 3/4"-10 UNC	3.38	85.9
5"	F07	1.25	31.75	8.39	213.1	6.38	162.1	1.25	31.8	9.25	234.95	8 X 3/4"-10 UNC	4.42	112.3
6"	F07	1.25	31.75	9.53	242.1	7.75	196.9	1.25	31.8	10.62	269.75	12 X 3/4"-10 UNC	4.07	103.4
8"	F10	2.00	50.80	11.42	290.1	8.91	226.3	2.00	50.8	13.00	330.20	12 X 7/8"-9 UNC	7.03	178.6
10"	F12	2.25	57.15	12.32	312.9	9.88	251.0	1.00	25.4	15.25	387.35	16 X 1"-8 UNC	9.11	231.4
12"	F12	3.00	76.20	13.90	353.1	11.00	279.4	1.00	25.4	17.75	450.85	16 X 1-1/8"-8 UN*	10.55	268.0
14"	F16	3.00	76.20	15.95	405.1	12.57	319.3	2.00	50.8	20.25	514.35	20 X 1-1/8"-8 UN*	11.99	304.5
16"	F16	3.00	76.20	18.31	465.1	15.83	402.1	2.00	50.8	22.50	571.50	20 X 1-1/4"-8 UN*	13.80	350.5
18"	F25	4.33	109.98	19.29	490.0	16.81	427.0	1.25	31.8	24.75	628.65	24 X 1-1/4"-8 UN*	15.81	401.6
**20"	F25	4.33	109.98	22.44	570.0	17.72	450.1	1.25	31.8	27.00	685.80	24 X 1-1/4"-8 UN*	17.50	444.5
**24"	F25	4.33	109.98	24.92	633.0	21.65	549.9	1.25	31.8	32.00	912.80	24 X 1-1/2"-8 UN*	21.50	546.1

*SPECIAL PITCH CAP SCREW THREAD REQUIRED PER MSS SP-68 SPECIFICATIONS.
**SHORT SCREWS REQUIRED FOR BLIND TAPPED HOLES NEAREST TO STEM FOR 20" AND LARGER VALVES. SEE INSTALLATION, OPERATION & MAINTENANCE GUIDE II FOR SERIES 6822 & 7822.

Valve Size	H In.	H mm.	J In.	J mm.	K In.	K mm.	L In.	L mm.	M In.	M mm.	N In.	N mm.	P In.	P mm.	Valve Lbs.	Valve Kg.	Operating Torque at 700 psi In.-Lbs.	Operating Torque at 700 psi N-m
2"	4.15	105.4	1.69	42.93	2.76	70.10	0.500	12.700	0.37	9.40	0.375	9.525	13.75	349.3	14	6	390	44
2½"	4.15	105.4	1.84	46.74	2.76	70.10	0.625	15.875	0.37	9.40	0.438	11.125	13.75	349.3	21	10	425	48
3"	4.15	105.4	1.88	47.75	2.76	70.10	0.625	15.875	0.37	9.40	0.438	11.125	13.75	349.3	27	12	450	51
4"	4.15	105.4	2.12	53.85	2.76	70.10	0.625	15.875	0.37	9.40	0.438	11.125	13.75	349.3	49	22	725	82
5"	4.15	105.4	2.31	58.67	2.76	70.10	0.750	19.050	0.37	9.40	0.500	12.700	13.75	349.3	60	27	1000	113
6"	4.15	105.4	2.31	58.67	2.76	70.10	0.750	19.050	0.37	9.40	0.500	12.700	13.75	349.3	71	32	1250	141
8"	5.12	130.0	2.88	73.15	4.02	102.11	1.125	28.575	0.44	11.18	1/4" X 1/4"		—	—	121	55	2025	229
10"	5.25	133.4	3.25	82.55	4.92	124.97	1.375	34.925	0.56	14.22	5/16" X 5/16"		—	—	143	65	3775	426
12"	5.25	133.4	3.62	91.95	4.92	124.97	1.625	41.275	0.56	14.22	3/8" X 3/8"		—	—	216	98	5725	647
14"	6.50	165.1	4.62	117.35	6.50	165.10	1.875	47.625	0.81	20.57	1/2" X 3/8"		—	—	378	172	11500	1299
16"	6.50	165.1	5.25	133.35	6.50	165.10	1.875	47.625	0.81	20.57	1/2" X 3/8"		—	—	488	222	15338	1733
18"	11.02	279.9	5.88	149.35	10.0	254.00	2.555	64.897	0.75	19.05	3/4" X 1/2"		—	—	720	327	19516	2205
20"	11.02	279.9	6.30	160.02	10.0	254.00	2.555	64.897	0.75	19.05	3/4" X 1/2"		—	—	855	389	26022	2940
24"	11.02	279.9	7.12	180.85	10.0	254.00	2.555	64.897	0.75	19.05	3/4" X 1/2"		—	—				

Visit our website for the most current information.

WARNING: Cancer and Reproductive Harm - www.P65Warnings.ca.gov.

High Performance Butterfly Valve Technical Data

CLASS 150 HPBFV 6800 Series Flow Data

Valve Size	Cv Rating	DISC OPEN - Degrees								
		10°	20°	30°	40°	50°	60°	70°	80°	90°
2"	92	2	6	13	20	30	43	72	81	92
2½"	150	3	11	21	33	50	71	117	132	150
3"	260	5	18	36	57	86	122	203	230	260
4"	460	9	32	64	101	152	216	360	405	460
5"	760	15	53	106	167	251	357	595	670	760
6"	1150	23	81	161	253	380	540	879	1015	1150
8"	2100	42	147	295	462	695	987	1640	1850	2100
10"	3200	64	225	450	705	1056	1505	2496	2816	3200
12"	4700	94	330	660	1035	1551	2210	3666	4136	4700
14"	5800	116	406	815	1276	1915	2726	4525	5105	5800
16"	8000	160	560	1120	1760	2640	3760	6240	7040	8000
18"	10500	210	735	1470	2310	3465	4935	8190	9240	10500
20"	14000	280	980	1960	3080	4620	6580	10920	12320	14000
24"	21000	420	1470	2940	4620	6930	9870	16380	18480	21000
30"	33500	670	2345	4690	7370	11055	15745	26130	29480	33500

CLASS 300 HPBFV 7800 Series Flow Data

Valve Size	Cv Rating	DISC OPEN - Degrees								
		10°	20°	30°	40°	50°	60°	70°	80°	90°
2"	92	2	6	13	20	30	43	72	81	92
2½"	150	3	11	21	33	50	71	117	132	150
3"	260	5	18	36	57	86	122	203	230	260
4"	460	9	32	65	101	152	216	360	405	460
5"	760	15	53	106	167	251	357	595	670	760
6"	1150	23	81	161	253	380	540	987	1015	1150
8"	1900	38	133	266	418	627	895	1485	1675	1900
10"	2800	56	196	392	616	925	1316	2185	2465	2800
12"	4100	82	287	575	905	1355	1930	3200	3610	4100
14"	5500	110	385	770	1210	1815	2585	4290	4840	5500
16"	7600	152	532	1065	1675	2510	3575	5930	6690	7600
18"	9900	198	695	1390	2180	3270	4655	7725	8715	9900
20"	13000	260	910	1820	2860	4290	6110	10140	11440	13000
24"	19500	390	1365	2730	4290	6435	9165	15210	17160	19500

Cv = Flow in U.S. Gallons per minute of 60°F water with a 1 psi pressure drop across valve

Temperature °F	Class 150	Class 300
-20	285	740
0	285	740
50	285	740
100	285	740
150	273	708
200	260	675
250	254	530
300	230	390
350	215	250
400	100	100
450	0	0
500	0	0
	Pressure PSI	

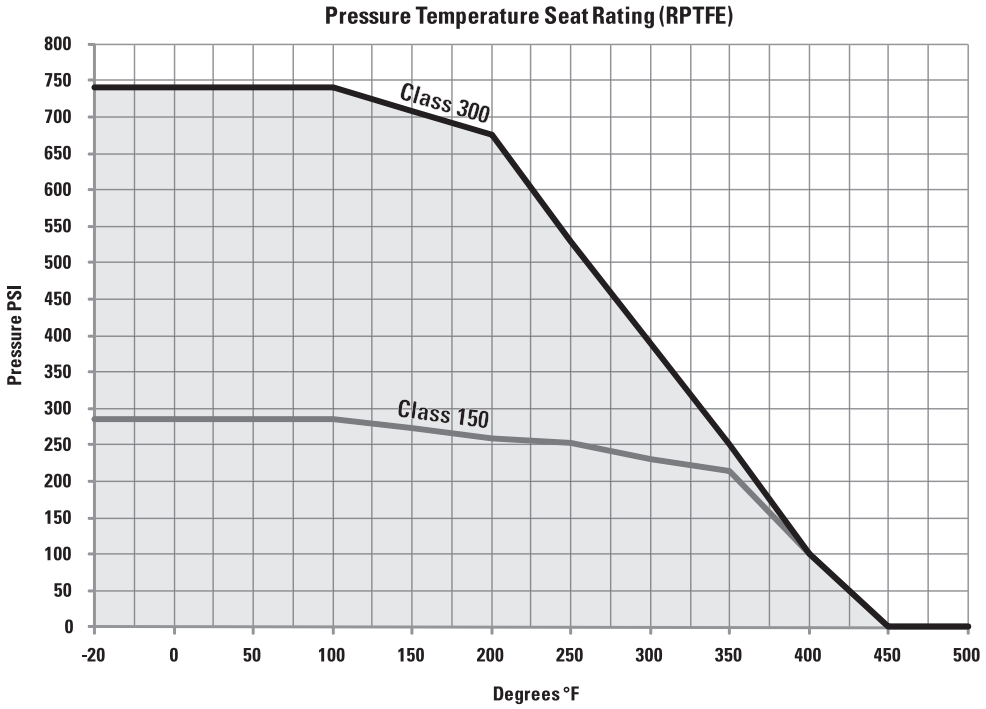

High Performance Butterfly Valve Technical Data

OPERATORS

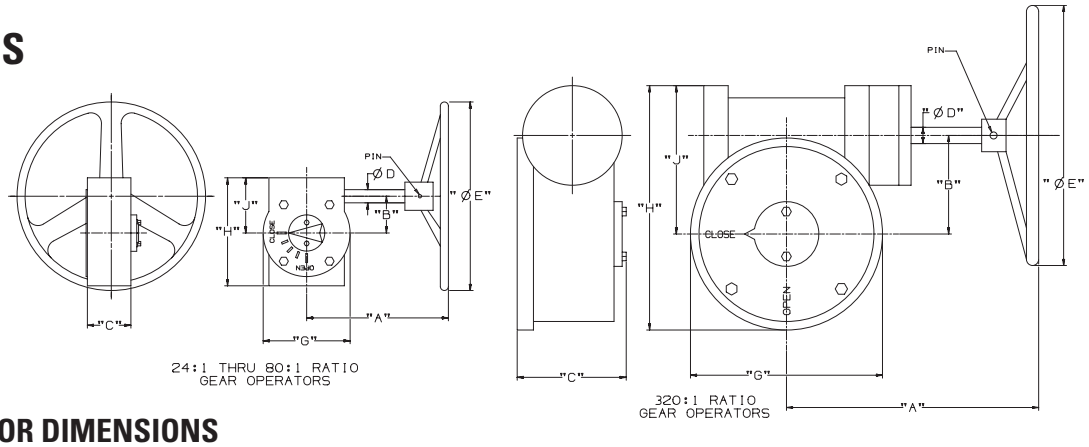

GEAR OPERATOR DIMENSIONS

Valve Size		Gear Operator Figure Number	NIBCO Material Number	Ratio	Gear Operator Efficiency	Gear Operator Mounting	A		B		C		D	
Class 150	Class 300						In.	mm.	In.	mm.	In.	mm.	In.	mm.
2"	2"	GO24:1-1-8	RG70001	24:1	15%	F07	5.77	146.6	1.73	43.9	2.65	67.3	0.625	15.88
2-1/2", 3", 4"	2-1/2", 3",4"	GO24:1-3-8 W/STSA-4	RG70002	24:1	15%	F07	5.77	146.6	1.73	43.9	2.65	67.3	0.625	15.88
5" 6"	5" 6"	GO24:1-3-8 W/STSA-5	RG70003	24:1	15%	F07	5.77	146.6	1.73	43.9	2.65	67.3	0.625	15.88
8"	—	GO30:1-1-12 W/STSA-6	RG70004	30:1	19%	F10	9.50	241.3	2.50	63.5	3.00	76.2	0.750	19.05
—	8"	GO30:1-1-12	RG70005	30:1	19%	F10	9.50	241.3	2.50	63.5	3.00	76.2	0.750	19.05
10"	—	GO30:1-2-12	RG70006	30:1	19%	F12	9.50	241.3	2.50	63.5	3.00	76.2	0.750	19.05
12"	—	GO50:1-1-16	RG70007	50:1	20%	F12	9.00	228.6	3.00	76.2	3.00	76.2	0.750	19.05
14"	10"	GO50:1-3-16	RG70008	50:1	20%	F12	9.00	228.6	3.00	76.2	3.00	76.2	0.750	19.05
—	12"	GO80:1-2-16	RG70009	80:1	16%	F12	10.75	273.1	4.75	120.7	4.40	111.8	1.000	25.40
16"	14"	GO80:1-1-16	RG70010	80:1	16%	F16	10.75	273.1	4.75	120.7	4.40	111.8	1.000	25.40
18"	—	GO80:1-1-1-20	RG70011	80:1	16%	F16	10.75	273.1	4.75	120.7	4.40	111.8	1.000	25.40
—	16"	GO320:1-3-20	RG70020	320:1	15%	F16	15.51	394.0	6.06	153.9	6.46	164.1	1.190	30.23
20"	—	GO320:1-1-20	RG70012	320:1	15%	F16	15.51	394.0	6.06	153.9	6.46	164.1	1.190	30.23
24"	18" 20"	GO320:1-2-20	RG70013	320:1	15%	F25	15.51	394.0	6.06	153.9	6.46	164.1	1.190	30.23
30"	24"	GO320:1-4-20	RG70021	320:1	15%	F25	15.51	394.0	6.06	153.9	6.46	164.1	1.190	30.23

Valve Size		E		G		H		J		Weight		Mounting Screws	Handwheel Pin Size	Hand Wheel Figure No.
Class 150	Class 300	In.	mm.	In.	mm.	In.	mm.	In.	mm.	Lbs.	Kg			
2"	2"	8	203	4.00	101.6	5.07	128.8	2.90	73.7	12	5.5	5/16"-18 UNC	Ø.190 X 1.63 LONG	RG70014
2-1/2", 3", 4"	2-1/2", 3",4"	8	203	4.00	101.6	5.07	128.8	2.90	73.7	12	5.5	5/16"-18 UNC	Ø.190 X 1.63 LONG	RG70014
5" 6"	5" 6"	8	203	4.00	101.6	5.07	128.8	2.90	73.7	12	5.5	5/16"-18 UNC	Ø.190 X 1.63 LONG	RG70014
8"	—	12	305	6.00	152.4	6.90	175.3	3.90	99.1	26.5	12	3/8"-16 UNC	Ø.190 X 1.63 LONG	RG70015
—	8"	12	305	6.00	152.4	6.90	175.3	3.90	99.1	26.5	12	3/8"-16 UNC	Ø.190 X 1.63 LONG	RG70015
10"	—	12	305	6.00	152.4	6.90	175.3	3.90	99.1	26.5	12	1/2"-13 UNC	Ø.190 X 1.63 LONG	RG70015
12"	—	16	406	6.70	170.2	7.80	198.1	4.60	116.8	37.5	17	1/2"-13 UNC	Ø.190 X 1.63 LONG	RG70016
14"	10"	16	406	6.70	170.2	7.80	198.1	4.60	116.8	37.5	17	1/2"-13 UNC	Ø.190 X 1.63 LONG	RG70016
—	12"	16	406	10.25	260.4	11.50	292.1	6.25	158.8	72	33	1/2"-13 UNC	Ø.380 X 1.81 LONG	RG70017
16"	14"	16	406	10.25	260.4	11.50	292.1	6.25	158.8	72	33	3/4"-10 UNC	Ø.380 X 1.81 LONG	RG70017
18"	—	20	508	10.25	260.4	11.50	292.1	6.25	158.8	74	34	3/4"-10 UNC	Ø.380 X 2.50 LONG	RG70018
—	16"	20	508	11.81	300.0	17.00	431.8	11.10	281.9	200	91	3/4"-10 UNC	Ø.380 X 2.50 LONG	RG70019
20"	—	20	508	11.81	300.0	17.00	431.8	11.10	281.9	200	91	3/4"-10 UNC	Ø.380 X 2.50 LONG	RG70019
24"	18" 20"	20	508	11.81	300.0	17.00	431.8	11.10	281.9	200	91	5/8"-11 UNC	Ø.380 X 2.50 LONG	RG70019
30"	24"	20	508	11.81	300.0	17.00	431.8	11.10	281.9	200	91	5/8"-11 UNC	Ø.380 X 2.50 LONG	RG70019

LEVER HANDLE

Item	Description	Material
23	Handle Assembly	Mallable Iron
24	Plate, Throttle	Steel, Plated
25	Screw, Hex	Carbon Steel, Plated
26	Lockwasher	Carbon Steel, Plated

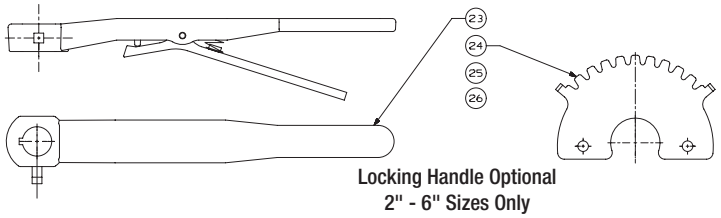

Locking Handle Optional
2" - 6" Sizes Only

Visit our website for the most current information.

High Performance Butterfly Valve Technical Data

MATERIAL LIST

	PART	SPECIFICATION
1.	Stem	Stainless Steel UNS ASTM A564 UNS S17400
2.	Flange, Gland	Stainless Steel ASTM A351 Grade CF8M
3.	Retainer, Stem (2)	Stainless Steel ASTM A276 UNS S31600
4.	Gland, Packing	Stainless Steel ASTM A276 UNS S31600
5.	Packing	PTFE
6.	Retainer, Packing	Stainless Steel ASTM A276 UNS S31600
7.	Lockwasher (2)	Stainless Steel Type 304 18-8
8.	Nut (2)	Stainless Steel Type 304 18-8
9.	Stud (2)	Stainless Steel Type 304 18-8
10.	Screw, SHCS	Stainless Steel Type 304 18-8
11.	Retainer, Seat	Stainless Steel ASTM A276 UNS S31600

	PART	SPECIFICATION
12.	Bushing, Upper	Stainless Steel Type 304 PTFE Coated
13.	Seat	PTFE 15% Glass Reinforced
14.	Disc	Stainless Steel ASTM A351 Grade CF8M
15.	Pin, Disc (2)	Stainless Steel ASTM A276 UNS S31600
16.	Bushing, Lower	Stainless Steel Type 304 PTFE Coated
17.	Body	Carbon Steel ASTM A216 Grade WCB
18.	Disc, Spacer	Stainless Steel ASTM A240 UNS S31600
19.	Seal, Lower	PTFE
20.	Cap, Body	Stainless Steel ASTM A351 Grade CF8M
21.	Lockwasher (4)	Stainless Steel Type 304 18-8
22.	Screw, Hex (4)	Stainless Steel Type 304 18-8

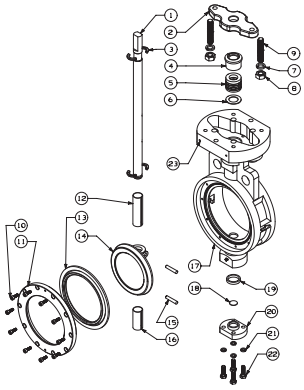

NIBCO HPBFV REPLACEMENT PARTS

LCS6822 SERIES CLASS 150	GEAR OPERATOR KIT		HANDWHEEL		HANDWHEEL PIN		STEM BUSHING / KEY		LEVER HANDLE KIT	LEVER BUSHING	STEM SEAL KIT	RPTFE SEAT (only)
	RATIO	PART NO. NUMBER	SIZE	PART NO. NUMBER	SIZE	PART NO. NUMBER	SIZE	PART NO. NUMBER	PART NO. NUMBER	PART NO. NUMBER	PART NO. NUMBER	PART NO. NUMBER
2"	24:1	RG70001	8" OD X .625" BORE	RG70014	Ø.190" X 1.63" LONG	RG700130	Ø.500 X .375 FLATS	DIRECT	RG70031	RG70034	RG700110	RG700080
2½"	24:1	RG70002	8" OD X .625" BORE		Ø.190" X 1.63" LONG		Ø.625 X .438 FLATS	RG70022	RG70032	DIRECT	RG700111	RG700081
3"	24:1		8" OD X .625" BORE		Ø.190" X 1.63" LONG		Ø.625 X .438 FLATS					RG700082
4"	24:1		8" OD X .625" BORE		Ø.190" X 1.63" LONG		Ø.625 X .438 FLATS					RG700083
5"	24:1	RG70003	8" OD X .625" BORE		Ø.190" X 1.63" LONG		Ø.750 X .500 FLATS	RG70023	RG70033	DIRECT	RG700112	RG700084
6"	24:1		8" OD X .625" BORE		Ø.190" X 1.63" LONG		Ø.750 X .500 FLATS				RG700113	RG700085
8"	30:1	RG70004	12" OD X .750" BORE	RG70015	Ø.190" X 1.63" LONG		Ø.875 X .625 FLATS	RG70024			RG700114	RG700086
10"	30:1	RG70006	12" OD X .750" BORE		Ø.190" X 1.63" LONG		.250" X .250" X 2" LG.	RG70025			RG700115	RG700087
12"	50:1	RG70007	16" OD X .750" BORE	RG70016	Ø.190" X 1.63" LONG		.250" X .250" X 2" LG.				RG700116	RG700088
14"	50:1	RG70008	16" OD X .750" BORE		Ø.190" X 1.63" LONG		.312" X .312" X 2-1/4" LG.	RG70026			RG700117	RG700089
16"	80:1	RG70010	16" OD X 1.00" BORE	RG70017	Ø.380" X 1.81" LONG	RG700131	.500" X .375" X 3" LG.	RG70028			RG700118	RG700090
18"	80:1	RG70011	20" OD X 1.00" BORE	RG70018	Ø.380" X 2.50" LONG		.500" X .375" X 3" LG.					RG700091
20"	320:1	RG70012	20" OD X 1.19" BORE	RG70019	Ø.380" X 2.50" LONG		.500" X .500" X 3" LG.	RG70029			RG700119	RG700092
24"	320:1	RG70013	20" OD X 1.19" BORE		Ø.380" X 2.50" LONG		.750" X .500" X 4" LG.	RG70030			RG700120	RG700093
30"	320:1	RG70021	20" OD X 1.19" BORE		Ø.380" X 2.50" LONG		.866" X .788" X 5" LG.	RG700032			RG700121	RG7000940

LCS7822 SERIES CLASS 300	GEAR OPERATOR KIT		HANDWHEEL		HANDWHEEL PIN		STEM BUSHING / KEY		LEVER HANDLE KIT	LEVER BUSHING	STEM SEAL KIT	RPTFE SEAT (only)
	RATIO	PART NO. NUMBER	SIZE	PART NO. NUMBER	SIZE	PART NO. NUMBER	SIZE	PART NO. NUMBER	PART NO. NUMBER	PART NO. NUMBER	PART NO. NUMBER	PART NO. NUMBER
2"	24:1	RG70001	8" OD X .625" BORE	RG70014	Ø.190" X 1.63" LONG	RG700130	Ø.500 X .375 FLATS	DIRECT	RG70031	RG70034	RG700110	RG700080
2½"	24:1	RG70002	8" OD X .625" BORE		Ø.190" X 1.63" LONG		Ø.625 X .438 FLATS	RG70022	RG70032	DIRECT	RG700111	RG700081
3"	24:1		8" OD X .625" BORE		Ø.190" X 1.63" LONG		Ø.625 X .438 FLATS					RG700082
4"	24:1		8" OD X .625" BORE		Ø.190" X 1.63" LONG		Ø.625 X .438 FLATS					RG700083
5"	24:1	RG70003	8" OD X .625" BORE		Ø.190" X 1.63" LONG		Ø.750 X .500 FLATS	RG70023	RG70033	DIRECT	RG700112	RG700084
6"	24:1		8" OD X .625" BORE		Ø.190" X 1.63" LONG		Ø.750 X .500 FLATS				RG700122	RG700085
8"	30:1	RG70005	12" OD X .750" BORE	RG70015	Ø.190" X 1.63" LONG		.250" X .250" X 2" LG.	RG70025			RG700123	RG700095
10"	50:1	RG70008	16" OD X .750" BORE	RG70016	Ø.190" X 1.63" LONG		.312" X .312" X 2-¼" LG.	RG70026			RG700124	RG700096
12"	80:1	RG70009	16" OD X 1.00" BORE	RG70017	Ø.380" X 1.81" LONG	RG700131	.375" X .375" X 3" LG.	RG70027			RG700125	RG700097
14"	80:1	RG70010	16" OD X 1.00" BORE		Ø.380" X 1.81" LONG		.500" X .375" X 3" LG.	RG70028			RG700126	RG700098
16"	320:1	RG70020	20" OD X 1.19" BORE	RG70019	Ø.380" X 2.50" LONG		.500" X .375" X 3" LG.	RG70028			RG700127	RG700099
18"	320:1	RG70013	20" OD X 1.19" BORE		Ø.380" X 2.50" LONG		.750" X .500" X 4" LG.	RG70030			RG700128	RG700100
20"	320:1		20" OD X 1.19" BORE		Ø.380" X 2.50" LONG		.750" X .500" X 4" LG.					RG700101
24"	320:1	RG70021	20" OD X 1.19" BORE		Ø.380" X 2.50" LONG		.866" X .788" X 5" LG.	RG700032			RG700129	RG700102

NOTES
1. Replacement Gear Operators includes Handwheel, Handwheel Pin, 4 Cap Screws, 4 Lock Washers, Key and Stem Bushing (if required) for mounting to BFV.
2. Stem Seal Kit includes Upper Packing Set, Packing Retainer, and Lower Body Cap Seal.
3. Lever Handle Kit includes Handle, Throttle Plate, Lockwashers, Bolts, and Bushing (if required).

Visit our website for the most current information.