Cat.no.:E-PS

Cat.no.:E-GGC

Cat.no.:E-TMBV

Cat.no.:E-FBV

Cat.no.:E-DOV

Cat.no.:E-TOV

Cat.no.:E-PLV

Cat.no.:E-FSV

Cat.no.:E-DAV

Cat.no.:E-CPS

Cat.no.:E-CBV

Cat.no.:E-PV

NEWAY 纽威
NEWAY VALVE (SUZHOU) CO., LTD.

No.666 Taishan Road, Suzhou New District, P.R. China
Post Code:215129
Tel: 86-512-666-51365
Fax: 86-512-666-18930-2102
E-mail: overseas.sales@neway.com.cn
http://www.newayvalve.com

Distributed by:

Cat.no.:E-GGC-2019

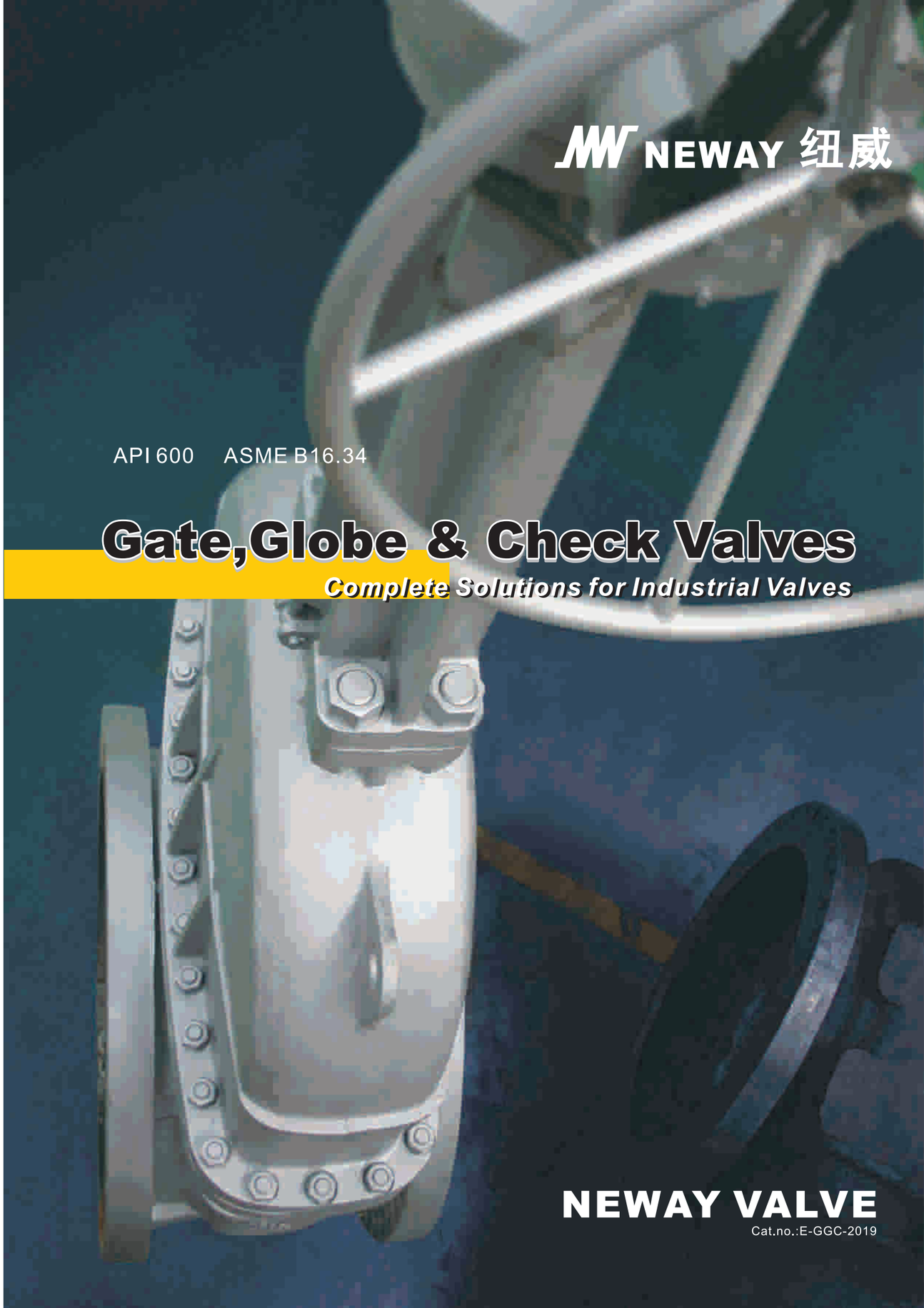

NEWAY 纽威

API 600 ASME B16.34

Gate,Globe & Check Valves

Complete Solutions for Industrial Valves

NEWAY VALVE

Cat.no.:E-GGC-2019

Table of Contents

Introduction
1 Quality Commitment
2 Product Range
3 Technical Innovation
4 Introduction of Foundries
5 Advanced Manufacturing & Quality Control
6~7 Typical Product View
8 How to Order

Gate Valve
9 Design Feature
10 Material List
11~13 Dimension & Weight

Globe Valve
14 Design Feature
15 Material List
16~18 Dimension & Weight

Check Valve
19 Design Feature
20 Material List
21~23 Dimension & Weight

24 **Pressure Seal Valve**

25 **High Temp.Cast Alloy Steel**

Pressure Seal Gate Valve
26 Design Feature
27 Material List
28~29 Dimension & Weight

Pressure Seal Globe Valve
30 Design Feature
31 Material List
32~33 Dimension & Weight

Pressure Seal Check Valve
34 Design Feature
35 Material List
36~37 Dimension & Weight

38~43 **Torque & Thrust**

44 **Gear Operator**

45 **Low Fugitive Emission Control**

46~48 **NACE Introduction**
Special Design Feature

Quality Commitment

Complete Solutions for Industrial Valves

As a global leader of valve manufacturing, Neway (SSE:603699) is dedicated to the production, research, and development of industrial valves. Neway is committed to providing complete valve solutions to all industries through advanced engineering and innovation.

Neway's product line includes Ball, Butterfly, Gate, Globe, Check, Nuclear, Control, Subsea, Safety valves. Our high quality standards and innovative ability are recognized by many global end users and EPCs. Neway valves are utilized in a wide variety of industries and working conditions such as Refining, Chemical, Coal Chemical, Offshore(including subsea), Air Separation, LNG, Nuclear Power, Power Generation, and Pipeline Transmission applications.

Facilities & Service

Neway has developed a sophisticated multi-plant management system operating one valve assembly plant, one API6A valve plant, three foundries, and one R&D center. Our largest assembly plant was expanded in 2013, and it now covers 230,000 square meters.

Advanced software (ANSYS, FE-Safe, CF-Design, Siemens PLM and NX) is applied here at Neway for the Research & Development of products. We use SAP to control the traceability and status of all products during the manufacturing process. In order to ensure the safety, eco-friendliness, and reliability of our products, we use the most advanced fire-safe, cryogenic, high pressure, and fugitive emission test equipment.

As part of Neway's global strategy, to provide better service to our customers, we have established our overseas subsidiaries in USA, Netherlands, Italy, Singapore and Dubai along with over 80 agents and distributors worldwide.

High Quality, High Value

Neway is dedicated to the pursuit of "Zero Defect ". We maintain a quality management system that encompasses our entire operation from order entry, to final inspection. Through Neway's continuous efforts, our products have achieved industrial certificates including ISO 001, API 6A, API 6D, CE/PED, ASME N & NPT, TA-Luft, ABS, CU-TR and Fire-Safe approvals.

NORSOK

ISO 9001

API 6D

CE/PED

TA Luft

ABS

AD2000

Fire Safe Test

Neway recognizes the importance of valve quality for the safety and protection of personnel health and property. It is our quality commitment to focus our resources to provide our customers with first class products at a competitive price, that are designed, manufactured, inspected and tested in accordance with our customer's specifications and that comply with all international standards.

With respect to the facts that the current industrial standards do not always take into consideration the likelihood and consequences of possible deterioration in service, related to specific service fluids or the external environment in which they operate. Our customers are requested to keep an open line of communication with our engineering department to identify and implement standards, that will provide valves with the possibility of deterioration in service, so as to ensure safety over the valves expected lifetime.

API 600 & B16.34 Bolted Bonnet Valve

Type / Size	Gate Valve						Globe Valve						Check Valve					
	150	300	600	900	1500	2500	150	300	600	900	1500	2500	150	300	600	900	1500	2500
2"	●	●	●	●	●	●	●	●	●	●	●	●	●	●	●	●	●	●
2.5"	●	●	●	●	●	●	●	●	●	●	●	●	●	●	●	●	●	●
3"	●	●	●	●	●	●	●	●	●	●	●	●	●	●	●	●	●	●
4"	●	●	●	●	●	●	●	●	●	●	●	●	●	●	●	●	●	●
5"	●	●	●	●	●	●	●	●	●	●	●	●	●	●	●	●	●	●
6"	●	●	●	●	●	●	●	●	●	●	●	●	●	●	●	●	●	●
8"	●	●	●	●	●	●	●	●	●	●	●	●	●	●	●	●	●	●
10"	●	●	●	●	●	●	●	●	●	●	●	●	●	●	●	●	●	●
12"	●	●	●	●	●	●	●	●	●	●	●	●	●	●	●	●	●	●
14"	●	●	●	●	●	●	●	●	●	●			●	●	●	●	●	●
16"	●	●	●	●	●	●	●	●	●	●			●	●	●	●	●	●
18"	●	●	●	●	●	●	●	●	●				●	●	●	●	●	●
20"	●	●	●	●	●	●	●	●	●				●	●	●	●	●	●
24"	●	●	●	●	●	●	●	●	●				●	●	●	●	●	●
26"	●	●	●	●	●								●	●	●	●	●	
28"	●	●	●	●	●								●	●	●	●	●	
30"	●	●	●	●	●								●	●	●	●	●	
32"	●	●	●	●	●								●	●	●	●	●	
36"	●	●	●	●	●								●	●	●	●	●	
40"	●	●	●										●	●	●			
42"	●	●	●										●	●	●			
48"	●	●	●										●	●	●			
52"	●	●	●										●	●	●			
54"	●	●	●										●	●	●			
56"	●	●	●										●	●	●			
60"	●	●	●										●	●	●			
64"	●																	
66"	●																	
68"	●																	
70"	●																	
72"	●																	

API 600 & B16.34 Pressure Seal Valve

Type / Size	Gate Valve				Globe Valve				Check Valve			
	600	900	1500	2500	600	900	1500	2500	600	900	1500	2500
2"	●	●	●	●	●	●	●	●	●	●	●	●
2.5"	●	●	●	●	●	●	●	●	●	●	●	●
3"	●	●	●	●	●	●	●	●	●	●	●	●
4"	●	●	●	●	●	●	●	●	●	●	●	●
5"	●	●	●	●	●	●	●	●	●	●	●	●
6"	●	●	●	●	●	●	●	●	●	●	●	●
8"	●	●	●	●	●	●	●	●	●	●	●	●
10"	●	●	●	●	●	●	●	●	●	●	●	●
12"	●	●	●	●	●	●	●	●	●	●	●	●
14"	●	●	●	●	●	●	●		●	●	●	●
16"	●	●	●	●	●	●			●	●	●	●
18"	●	●	●	●	●				●	●	●	●
20"	●	●	●	●	●				●	●	●	●
24"	●	●	●	●	●				●	●	●	●
26"	●	●	●						●	●	●	
28"	●	●	●						●	●	●	
30"	●	●	●						●	●	●	
32"	●	●	●						●	●	●	
36"	●	●	●						●	●	●	
40"	●								●			
42"	●								●			
48"	●								●			
52"	●								●			
54"	●								●			
56"	●								●			
60"	●								●			

Note:

1. Face to face and end to end dimension conform to BS 2080,ANSI B16.10 or ISO 5752.
2. Flange is in line with ANSI B16.5 in type and dimension.
3. BW end dimension conform to ANSI B16.25.
4. Inspection and test in accordance with API 598 or BS EN 12266.
5. Valves larger than 64"are manufactured per Neway standards.

NEWAY reserves the right to change design, materials or specifications without notice and is free of obligation to furnish or install such changes on products previously sold.

Technical Innovation

With cutting-edge computer technology utilized, NEWAY Technical Center focuses on providing outstanding quality products and developing new lines. There is a highly educated and well-trained engineering team, supported by a comprehensive internal computer network which links the entire operations of design, manufacturing and administration.

NEWAY design philosophy is to develop a safe and cost-efficient valve. We introduced the latest Ansys, Fe-safe, CF-design and NX software for all our new product design research which include the advanced finite element analysis, fluid and fatigue analysis to virtually verify the new design prior to production, which has resulted in dramatically shortening development duration and assure a safe and cost-efficient final product.

NEWAY technical personnel are always ready to offer on line or on site technical training and support for all of its distributors, agents and end users.

High Temperature Test

Low Temperature Test

Low Fugitive Emission Test

Flow Coefficient Test

Fire Safe Test

NEWAY reserves the right to change design, materials or specifications without notice and is free of obligation to furnish or install such changes on products previously sold.

Introduction of Foundries

Valve casting quality is of prime importance for product life, personnel and environmental safety, particularly in high temperature and high pressure service as valve serves as one of pressure-containing equipment in process-controlled pipeline. Thus, castings are always certified firstly by the customers requiring strictly before a valve manufacturer is pre-qualified and approved as a qualified supplier.

Compared with most of other competitors, we own three foundries: two of them work on producing large-sized sand castings by organic ester water glass, and two of them are for production of small-sized investment castings by lost-wax casting. Besides, each is equipped with all kinds of quality inspection facilities, such as spectrum instrument, non-destructive test machinery, and mechanical property test device. Against such backdrop, Neway can monitor the whole process of manufacture to ensure product quality, delivery and competitive price and enable Neway to remain a creditable supplier for every customer.

Automatic Molding Line

Exported Sand Mixer

Automatic Forklift for Heat Treating

Supply Range & capacity :

Plant Name	Dafeng Foundry	Suzhou Foundry
Process Technology	Lost wax investment casting	Organic ester water glass sand casting
Size Range(in)	1/2” ~10”	2” ~64”
Pressure Rating	ANSI Class 150~600	ANSI Class 150~2500
Weight(Kg)	1~150	100~11000
Material	WCB, WCC, LCB, LCC, WC6, WC9, C5, C12, C12A, CF8, CF8M, CF3, CF3M, CN7M, Monel, Inconel, Duplex Steel, 4A,5A	
Monthly Capacity(Ton)	1500	1800
Quality Certificate	ISO9001,CE/PED, AD W0	ISO9001,CE/PED, Norsok

NEWAY reserves the right to change design, materials or specifications without notice and is free of obligation to furnish or install such changes on products previously sold.

Advanced Manufacturing & Quality Control

The latest computer technology has been extensively applied in NEWAY manufacturing, which includes a large number of numeric control machines (machining center, CNC horizontal and vertical lathe and CNC drilling machine) and ERP management system. Additionally, the data through all factories have been connected and shared. These facilitate resource integration, boost productivity, evidently enhancing machining quality and tightening process control.

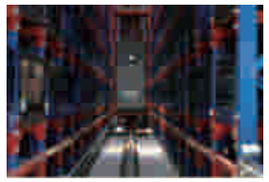

NEWAY developed comprehensive and advanced inspection and test facilities to control the quality from rough castings or forgings to final products, which enable us to perform radiographic test, liquid penetrant test, magnetic-particle test, spectrum analysis, Material Positive Identification (MPI), impact test, tensile test, hardness test, fire safe test, cryogenic test, vacuum test, low fugitive emission test, high pressure gas test, ultrasonic testing and hydrostatic test.

NEWAY reserves the right to change design, materials or specifications without notice and is free of obligation to furnish or install such changes on products previously sold.

Typical Product View

1 20” Class 300 Gate Valve

2 42” Class 600 Gate Valve

3 64” Class 150 Gate Valve

4 18” Class 600 Cryogenic Gate Valve

5 32” Electric Gate Valve

6 24” Class 300 Pneumatically Actuated Gate Valve

7 24” Class 600 Gate Valve

8 16” Class 900 Pressure Seal Gate Valve

9 42” Class 150 Check Valve

10 A217 Gr. C12A Gate Valve

1

2

3

4

10

5

6

7

8

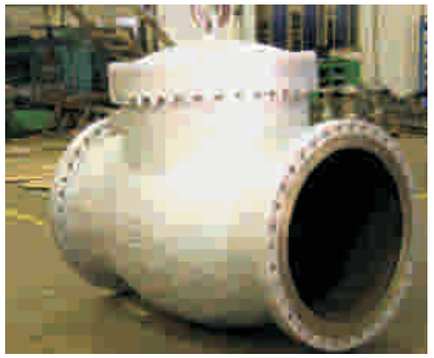

9

NEWAY reserves the right to change design, materials or specifications without notice and is free of obligation to furnish or install such changes on products previously sold.

NEWAY reserves the right to change design, materials or specifications without notice and is free of obligation to furnish or install such changes on products previously sold.

Example:

4	GPS	15	R	-	G	,	C00	/	5	[*]
①	②	③	④		⑤		⑥		⑦	⑧

Neway figure numbers are designed to cover essential features. When ordering, please show the figure numbers and a detailed description to avoid misunderstanding of your requirements.

Following descriptions provide a basic guideline in valve specification:

① Valve Size

② Valve Type

Valve Type	Gate Valve	Pressure Seal Gate Valve	Bellows Seal Gate Valve	Globe Valve	Pressure Seal Globe Valve	Bellows Seal Globe Valve	Swing Check Valve	Pressure Seal Check Valve
Symbol	G	GPS	GBL	GL	GLP	GLB	S	SPS

③ ANSI Class

Code	1	3	6	9	15	25
Class (LB)	150	300	600	900	1500	2500

④ End Connection

Symbol	End	Symbol	End
R	Raised face flanged end	S	Socket welding end
J	RTJ flanged end	N	Screwed end
B	Butt-welding end	F	Flat face flanged end
W	Wafer		

⑤ Actuator

Symbol	Description	Symbol	Description
	Handwheel Operator	M	Electric Actuator
G	Gear Operator	P	Pneumatic actuator

⑥ Shell Material

Material	C00	L20	L21	H01	H02	H03	S00	S01	S02	S03	N04
ASTM Ref	A216 Gr. WCB	A352 Gr. LCB	A352 Gr. LCC	A217 Gr. WC6	A217 Gr. WC9	A217 Gr. C5	A351 Gr. CF8	A351 Gr. CF8M	A351 Gr. CF3	A351 Gr. CF3M	A351 Gr. CN7M

⑦ Trim Material

API600 Trim Number	Symbol	Disc Surface	Seat Surface	Stem Material
1	1	13%Cr	13%Cr	ASTM A182 Grade F6a
2	2	18%Cr,8%Ni	18%Cr,8%Ni	ASTM A182 Grade F304
5	5	Stellite	Stellite	ASTM A182 Grade F6a
8	8	13%Cr	Stellite	ASTM A182 Grade F6a
9	9	Monel	Monel	Ni Cu Alloy Monel
10	10	18%Cr,8%Ni	18%Cr,8%Ni	ASTM A182 Grade F316
12	12	18%Cr,8%Ni	Stellite	ASTM A182 Grade F316
13	13	Alloy 20 19%Cr,29%Ni	Alloy 20 19%Cr,29%Ni	ALLOY 20
	16	Stellite	Stellite	ASTM A182 Grade F316
	20	Bronze	Bronze	Bronze

Note: 1.The denotation of trim No. 1 to 13 are the same as that of Table 8 in API 600.
2.Trim number 1 may be replaced by trim number 8 without notice.

⑧ Structure & Material Special Code

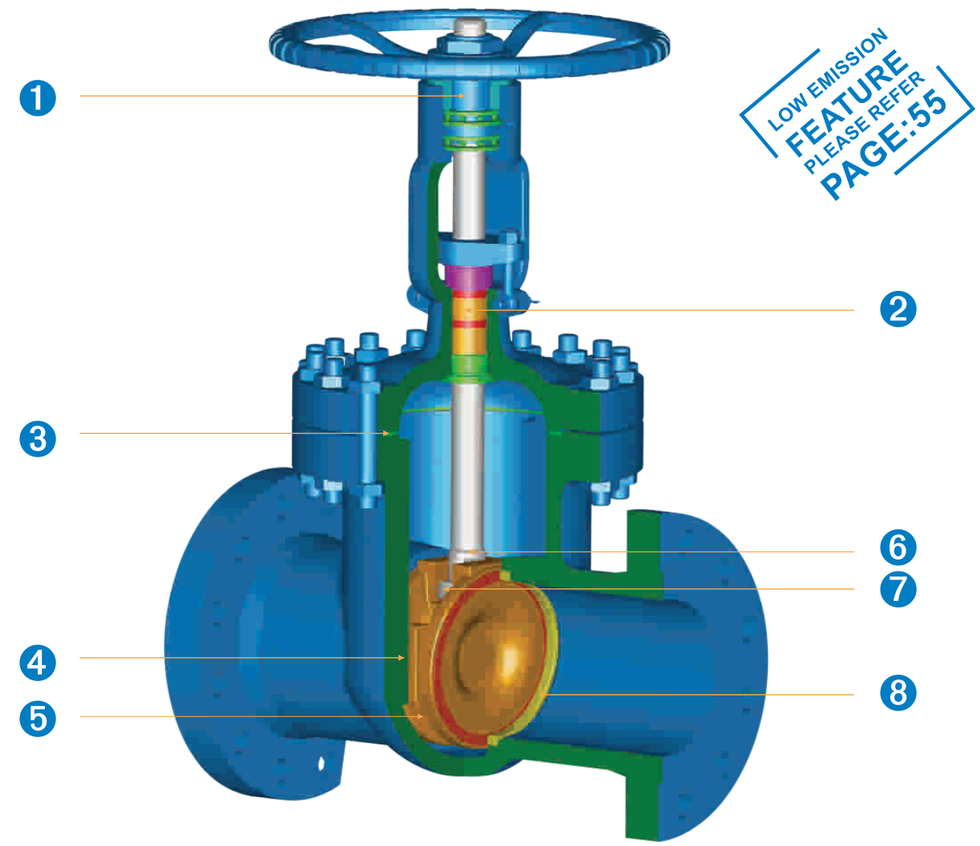

1. Long thread stem nut prolongs thread life and permits the removal of hand wheel in the fully open position.
2. Spacer ring in conjunction with packing is used in gate valves of 300 class and above while 150-class valve is only fitted with packing; packing with lantern ring is available upon customer request.
3. Flexible graphite gasket used for 150 Class gate valve, spiral wound gasket for Class 300 & 600 valves and metal ring gasket for gate valves of 900 or greater Class(600 Class is obtainable if customer requires)
4. Integral guide inside body keeps wedge self-centered during valve opening and closing.
5. Flexible wedge is able to compensate for seat surface distortion and body deformation caused by piping stress.
6. Blowout retention design: the tapered backseat face firmly contacts backseat of bonnet.
7. The strength of bonnet-wedge connection exceeds that of bonnet thread root.
8. Renewable seal welded seats with stellite 6 are standard design while screwed-in seats are optional.

NEWAY reserves the right to change design, materials or specifications without notice and is free of obligation to furnish or install such changes on products previously sold.

NEWAY reserves the right to change design, materials or specifications without notice and is free of obligation to furnish or install such changes on products previously sold.

Material List

Part	Standard	Low Temperature Service	High Temperature Service	Stainless Steel	Sour Service
BODY	ASTM A216-WCB	ASTM A352-LCC	ASTM A217-WC9	ASTM A351-CF8M	ASTM A216-WCB
BONNET	ASTM A216-WCB	ASTM A352-LCC	ASTM A217-WC9	ASTM A351-CF8M	ASTM A216-WCB
WEDGE	ASTM A216-WCB/CR13 OVERLAY	ASTM A352-LCC/316 OVERLAY	ASTM A217-WC9/STL. OVERLAY	ASTM A351-CF8M	ASTM A216-WCB/CR13 OVERLAY-NC
STEM NUT	ASTM A439 D-2	ASTM A439 D-2	ASTM A439 D-2	ASTM A439 D-2	ASTM A439 D-2
GLAND FLANGE	ASTM A216-WCB	ASTM A352-LCB	ASTM A216-WCB	ASTM A351-CF8	ASTM A216-WCB
HANDWHEEL	DUCTILE IRON	DUCTILE IRON	DUCTILE IRON	DUCTILE IRON	DUCTILE IRON
SEAT RING	ASTM A105/STL. OVERLAY	ASTM A182-F316/STL. OVERLAY	ASTM A182-F22/STL. OVERLAY	ASTM A182-F316/STL. OVERLAY	ASTM A105/STL. OVERLAY
STEM	ASTM A182-F6a	ASTM A182-F316	ASTM A182-F6a	ASTM A182-F316	ASTM A182-F6a-NC
BACK SEAT	ASTM A276-420	ASTM A276-316L	ASTM A276-420	ASTM A276-316L	ASTM A276-420-NC
GLAND	ASTM A276-420	STAINLESS STEEL	ASTM A276-420	ASTM A276-316L	ASTM A276-420-NC
GASKET	SPIRAL WOUND GRAPHITE	SPIRAL WOUND GRAPHITE	SPIRAL WOUND GRAPHITE	SPIRAL WOUND GRAPHITE	SPIRAL WOUND GRAPHITE
MIDDLE PACKING	GRAPHITE	GRAPHITE	GRAPHITE	GRAPHITE	GRAPHITE
TOP/BOTTOM PACKING	316L + GRAPHITE	316L + GRAPHITE	316L + GRAPHITE	316L + GRAPHITE	316L + GRAPHITE
RETAINING NUT	CARBON STEEL	CARBON STEEL	CARBON STEEL	STAINLESS STEEL	CARBON STEEL
HANDWHEEL NUT	CARBON STEEL	CARBON STEEL	CARBON STEEL	STAINLESS STEEL	CARBON STEEL
BONNET STUD	ASTM A193-B7	ASTM A320-L7M	ASTM A193-B16	ASTM A193-B8 Class 2	ASTM A193-B7M
BONNET NUT	ASTM A194-2H	ASTM A194-7M	ASTM A194-7	ASTM A194-8	ASTM A194-2HM
EYE BOLT	ASTM A193-B7	ASTM A320-L7M	ASTM A193-B16	ASTM A193-B8	ASTM A193-B7M
GLAND NUT	ASTM A194-2H	ASTM A194-7M	ASTM A194-7	ASTM A194-8	ASTM A194-2HM
EYE BOLT PIN	CARBON STEEL	STAINLESS STEEL	STAINLESS STEEL	STAINLESS STEEL	CARBON STEEL
RIVET	CARBON STEEL	CARBON STEEL	CARBON STEEL	STAINLESS STEEL	CARBON STEEL
NAME PLATE	STAINLESS STEEL	STAINLESS STEEL	STAINLESS STEEL	STAINLESS STEEL	STAINLESS STEEL

Notes: Above materials are general, when ordered, Please contact NEWAY Sales or technical team to confirm the details.

NEWAY reserves the right to change design, materials or specifications without notice and is free of obligation to furnish or install such changes on products previously sold.

Class 150 Cast Carbon Steel Gate Valve

API 600 Design,
Bolted Bonnet, OS&Y,
Screwed-in Back seat, Rising Stem,
Non-rising Handwheel,
Flexible Wedge

Figure NO.:

G1R,C00/8
G1B,C00/8

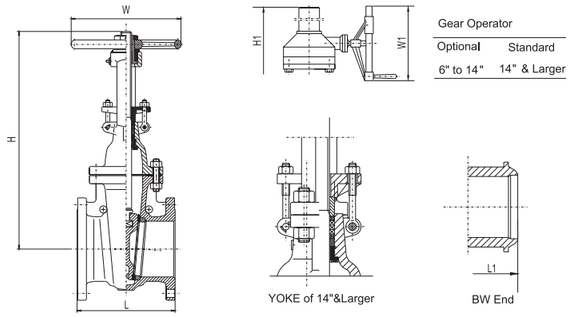

NPS	DN	L(RF)		L1(BW)		W		W1		H		H1		WT(RF)	WT(BW)
in	mm	in	mm	in	mm	in	mm	in	mm	in	mm	in	mm	Kg	Kg
2"	50	7	178	8.5	216	8	200	—	—	15	387	—	—	20	15
2.5"	65	7.5	190	9.5	241	8	200	—	—	17	437	—	—	26	22
3"	80	8	203	11.12	282	10	250	—	—	19	480	—	—	33	28
3.5"	90	8.5	216	—	—	10	250	—	—	17	444	—	—	45	—
4"	100	9	229	12	305	10	250	12	305	23	585	25	644	49	44
5"	125	10	254	15	381	12	300	—	—	27	681	—	—	64	58
6"	150	10.5	267	15.88	403	12	300	12	305	30	767	32	804	81	76
8"	200	11.5	292	16.5	419	14	350	12	305	38	956	39	999	125	114
10"	250	13	330	18	457	16	400	12	305	45	1149	48	1220	190	170
12"	300	14	356	19.75	502	18	450	12	305	53	1350	56	1428	282	248
14"	350	15	381	22.5	572	20	500	12	305	59	1508	60	1527	390	360
16"	400	16	406	24	610	55	550	18	458	67	1703	68	1732	510	490
18"	450	17	432	26	660	24	600	24	610	74	1892	75	1913	666	630
20"	500	18	457	28	711	27	680	24	610	83	2119	84	2145	872	842
22"	550	19.02	483	30	762	30	760	24	610	91	2323	92	2346	1010	970
24"	600	20	508	32	813	30	760	24	610	98	2500	99	2520	1265	1210
26"	650	22	559	34	864	—	—	24	610	—	—	110	2785	1670	1620
28"	700	24	610	36	914	—	—	24	610	—	—	117	2960	1958	1900
30"	750	24	610	36	914	—	—	24	610	—	—	124	3145	2265	2160
32"	800	26	660	38	965	—	—	24	610	—	—	129	3277	2630	2500
34"	850	27.99	711	39.37	1000	—	—	24	610	—	—	131	3321	3220	3059
36"	900	28	711	40	1016	—	—	24	610	—	—	141	3594	3634	3400
38"	950	30	762	41.34	1050	—	—	24	610	—	—	162	4111	4050	3848
40"	1000	30	762	42	1067	—	—	24	610	—	—	165	4200	4660	4430
42"	1050	31	787	43	1092	—	—	31	800	—	—	172	4372	4940	4690
44"	1100	32.01	813	43.7	1110	—	—	31	800	—	—	181	4605	5474	5200
46"	1150	32.99	838	45.28	1150	—	—	31	800	—	—	185	4687	6050	5748
48"	1200	34	864	46	1168	—	—	31	800	—	—	197	5011	6605	6200
50"	1250	36	914	—	—	—	—	31	800	—	—	204	5180	7540	—
52"	1300	38	965	—	—	—	—	31	800	—	—	208	5292	7985	—
54"	1350	40	1016	—	—	—	—	31	800	—	—	227	5774	8600	—
56"	1400	44.02	1118	—	—	—	—	31	800	—	—	235	5975	9050	—
58"	1450	47.01	1194	—	—	—	—	31	800	—	—	241	6123	9560	—
60"	1500	50	1270	—	—	—	—	39	1000	—	—	248	6305	10050	—
62"	1550	52.01	1321	—	—	—	—	39	1000	—	—	256	6490	10450	—
64"	1600	54.02	1372	—	—	—	—	39	1000	—	—	263	6675	11000	—
66"	1650	56.1	1425	—	—	—	—	39	1000	—	—	270	6850	11424	—
68"	1700	57.99	1473	—	—	—	—	39	1000	—	—	278	7050	11890	—
70"	1750	59.06	1500	—	—	—	—	39	1000	—	—	285	7250	12305	—
72"	1800	60	1524	—	—	—	—	39	1000	—	—	293	7450	12750	—

* (1) For valves larger than 72", Please contact Neway sales or engineering team for details.

NEWAY reserves the right to change design, materials or specifications without notice and is free of obligation to furnish or install such changes on products previously sold.

Class 300 Cast Carbon Steel Gate Valve

API 600 Design,
Bolted Bonnet, OS&Y,
Screwed-in Back seat, Rising Stem,
Non-rising Handwheel,
Flexible Wedge

Figure NO.:

G3R,C00/8
G3B,C00/8

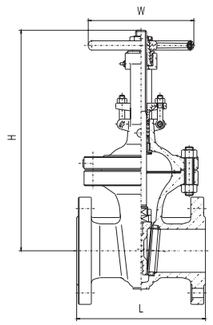

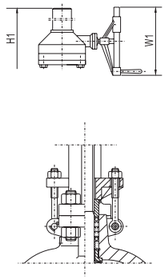

Gear Operator

Optional	Standard
6" to 12"	12" & Larger

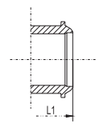

NPS	DN	L & L1 (RF & BW)		W		W1		H		H1		WT(RF)	WT(BW)
in	mm	in	mm	in	mm	in	mm	in	mm	in	mm	Kg	Kg
2"	50	8.5	216	8	200	12	305	16	410	20	520	26	17
2.5"	65	9.5	241	8	200	—	—	18	453	—	—	35	26
3"	80	11.12	283	10	250	12	305	20	509	21	533	52	39
4"	100	12	305	10	250	12	305	24	612	25	632	75	55
5"	125	15	381	12	300	—	—	28	705	—	—	102	84
6"	150	15.88	403	14	350	12	305	32	805	33	827	147	113
8"	200	16.5	419	16	400	12	305	40	1005	41	1048	229	178
10"	250	18	457	18	450	12	305	48	1209	49	1243	360	302
12"	300	19.75	502	20	500	18	460	56	1415	58	1466	520	485
14"	350	30	762	22	550	18	460	62	1581	64	1614	808	642
16"	400	33	838	24	600	24	610	68	1725	69	1750	1105	873
18"	450	36	914	—	—	24	610	—	—	76	1940	1420	980
20"	500	39	991	—	—	24	610	—	—	86	2175	1705	1510
22"	550	43	1092	—	—	24	610	—	—	95	2410	2422	2030
24"	600	45	1143	—	—	24	610	—	—	101	2569	2605	2160
26"	650	49	1245	—	—	24	610	—	—	113	2865	3090	2540
28"	700	53	1346	—	—	24	610	—	—	117	2968	3860	3604
30"	750	55	1397	—	—	24	610	—	—	126	3209	4948	4414
32"	800	60	1524	—	—	31	800	—	—	136	3444	5510	4820
34"	850	64.02	1626	—	—	32	810	—	—	147	3743	6598	5595
36"	900	68	1727	—	—	39	1000	—	—	150	3822	7700	6950
38"	950	72.01	1829	—	—	39	1000	—	—	174	4416	8788	7932
40"	1000	76	1930	—	—	39	1000	—	—	173	4383	10130	9660
42"	1050	78	1981	—	—	39	1000	—	—	177	4500	11270	10780
44"	1100	81.89	2080	—	—	39	1000	—	—	186	4735	12612	12064
46"	1150	85.98	2184	—	—	39	1000	—	—	196	4970	14612	13977
48"	1200	88	2235	—	—	39	1000	—	—	200	5078	16000	15310
50"	1250	90	2286	—	—	39	1000	—	—	203	5157	18000	17224
52"	1300	92.01	2337	—	—	39	1000	—	—	226	5751	19388	18552
54"	1350	94.02	2388	—	—	39	1000	—	—	225	5718	21388	20466
56"	1400	95.98	2438	—	—	39	1000	—	—	230	5835	22776	21794
58"	1450	97.99	2489	—	—	39	1000	—	—	239	6070	24776	23708
60"	1500	119.88	3045	—	—	39	1000	—	—	248	6305	26164	25036

* (1) For valves larger than 60", Please contact Neway sales or engineering team for details.

NEWAY reserves the right to change design, materials or specifications without notice and is free of obligation to furnish or install such changes on products previously sold.

Class 600 Cast Carbon Steel Gate Valve

API 600 Design,
Bolted Bonnet, OS&Y,
Screwed-in Back seat, Rising Stem,
Non-rising Handwheel,
Flexible Wedge

Figure NO.:

G6R,C00/8
G6J,C00/8
G6B,C00/8

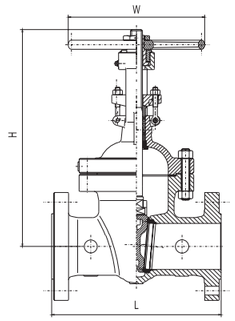

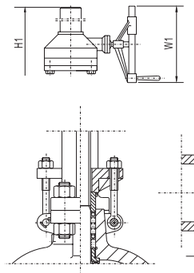

Gear Operator

Optional	Standard
4" to 10"	10" & Larger

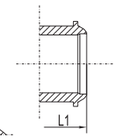

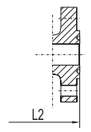

NPS	DN	L & L1 (RF&BW)		L2(RTJ)		W		W1		H		H1		WT(RF)	WT(BW)
in	mm	in	mm	in	mm	in	mm	in	mm	in	mm	in	mm	Kg	Kg
2"	50	11.5	292	11.62	295	8	250	—	—	16	418	—	—	39	30
2.5"	65	13	330	13.12	333	10	250	—	—	19	476	—	—	52	35
3"	80	14	356	14.12	359	10	250	12	305	20	518	22	547	68	55
4"	100	17	432	17.12	435	14	350	12	305	25	646	27	696	115	88
5"	125	20	508	20.12	511	16	400	—	—	30	770	—	—	196	160
6"	150	22	559	22.12	562	18	450	12	305	33	839	36	917	270	204
8"	200	26	660	26.12	663	20	500	18	458	40	1024	42	1060	450	350
10"	250	31	787	31.12	790	24	600	18	458	48	1229	49	1256	700	586
12"	300	33	838	33.12	841	27	680	18	458	57	1450	58	1475	984	728
14"	350	35	889	35.12	892	—	—	24	610	—	—	62	1574	1245	1094
16"	400	39	991	39.12	994	—	—	24	610	—	—	71	1797	1750	1495
18"	450	43	1092	43.12	1095	—	—	24	610	—	—	76	1931	2175	1840
20"	500	47	1194	47.25	1200	—	—	24	610	—	—	87	2207	3080	2513
22"	550	50.98	1295	51.38	1305	—	—	24	610	—	—	97	2464	3897	3297
24"	600	55	1397	55.38	1407	—	—	24	610	—	—	102	2582	4450	3810
26"	650	57	1448	57.5	1461	—	—	32	810	—	—	124	3150	5370	4771
28"	700	61	1549	61.5	1562	—	—	39	1000	—	—	132	3362	6370	5660
30"	750	65	1651	65.5	1664	—	—	39	1000	—	—	140	3549	7200	6400
32"	800	70	1778	70.6	1794	—	—	39	1000	—	—	150	3811	8520	7700
34"	850	75.98	1930	76.61	1946	—	—	39	1000	—	—	144	3660	8030	7294
36"	900	82	2083	82.6	2099	—	—	39	1000	—	—	168	4260	11890	10800
38"	950	86.02	2185	86.65	2201	—	—	39	1000	—	—	178	4522	13674	12358
40"	1000	90	2286	90.63	2302	—	—	47	1200	—	—	184	4670	15724	14283
42"	1050	96	2438	96.61	2454	—	—	47	1200	—	—	194	4921	16305	15120
44"	1100	97.32	2472	97.95	2488	—	—	47	1200	—	—	204	5183	18750	16947
46"	1150	98.66	2506	99.29	2522	—	—	47	1200	—	—	214	5445	21563	19587
48"	1200	100	2540	100.63	2556	—	—	47	1200	—	—	231	5876	24798	22996
50"	1250	100	2540	100.63	2556	—	—	47	1200	—	—	240	6088	28517	25774
52"	1300	102.52	2604	103.15	2620	—	—	47	1200	—	—	247	6275	32795	29789
54"	1350	105.04	2668	105.67	2684	—	—	47	1200	—	—	257	6537	37714	34974
56"	1400	107.56	2732	108.19	2748	—	—	47	1200	—	—	251	6386	43371	39199
58"	1450	110.08	2796	110.71	2812	—	—	47	1200	—	—	275	6986	49877	45305
60"	1500	112.6	2860	113.23	2876	—	—	47	1200	—	—	285	7248	57359	53191

* (1) For valves larger than 60", Please contact Neway sales or engineering team for details.

NEWAY reserves the right to change design, materials or specifications without notice and is free of obligation to furnish or install such changes on products previously sold.

Class 900 Cast Carbon Steel Gate Valve

API 600 Design,
Bolted Bonnet, OS&Y,
Screwed-in Back seat, Rising Stem,
Non-rising Handwheel,
Flexible Wedge

Figure NO.:

G9R,C00/5
G9J,C00/5
G9B,C00/5

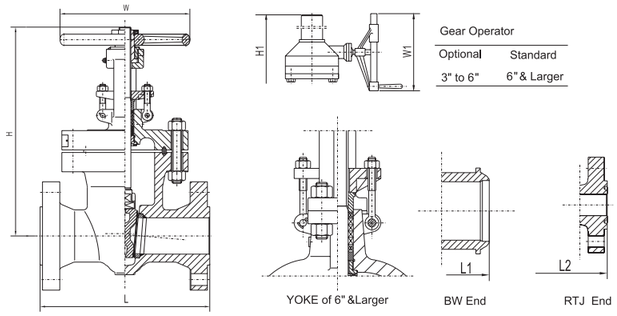

NPS	DN	L & L1 (RF&BW)		L2(RTJ)		W		W1		H		H1		WT(RF)	WT(BW)
in	mm	in	mm	in	mm	in	mm	in	mm	in	mm	in	mm	Kg	Kg
2"	50	14.5	368	14.62	371	10	250	—	—	20	498	—	—	90	74
2.5"	65	16.5	419	16.62	422	12	300	—	—	22	547	—	—	132	110
3"	80	15	381	15.12	384	14	350	12	305	23	573	27	677	102	95
4"	100	18	457	18.12	460	16	400	12	305	27	678	29	727	180	162
5"	125	22	559	22.12	562	18	450	12	305	33	850	36	904	335	258
6"	150	24	610	24.12	613	20	500	18	460	35	900	37	929	355	292
8"	200	29	737	29.12	740	24	600	18	460	43	1103	50	1262	665	528
10"	250	33	838	33.12	841	—	—	24	610	—	—	53	1345	1076	884
12"	300	38	965	38.12	968	—	—	24	610	—	—	60	1520	1430	1195
14"	350	40.5	1029	40.88	1038	—	—	24	610	—	—	70	1784	1965	1726
16"	400	44.5	1130	44.88	1140	—	—	31	800	—	—	74	1874	2690	2305
18"	450	48	1219	48.5	1232	—	—	31	800	—	—	87	2212	3264	2785
20"	500	52	1321	52.48	1333	—	—	31	800	—	—	94	2384	4425	4014
22"	550	56.5	1435	57.24	1454	—	—	39	1000	—	—	99	2502	5553	4897
24"	600	61	1549	61.73	1568	—	—	39	1000	—	—	103	2620	6680	5780
26"	650	65	1664	66.34	1685	—	—	39	1000	—	—	112	2833	9686	8234
28"	700	70	1778	70.83	1799	—	—	39	1000	—	—	115	2916	14045	11938
30"	750	74	1892	75.31	1913	—	—	47	1200	—	—	118	3000	20365	17310
32"	800	78	2004	79.72	2025	—	—	47	1200	—	—	121	3083	29529	25100
34"	850	83	2075	82.76	2102	—	—	47	1200	—	—	125	3167	42817	36394
36"	900	87	2232	88.94	2259	—	—	47	1200	—	—	128	3250	62085	52772

* (1) For valves larger than 36", Please contact Neway sales or engineering team for details.

NEWAY reserves the right to change design, materials or specifications without notice and is free of obligation to furnish or install such changes on products previously sold.

Class 1500 Cast Carbon Steel Gate Valve

API 600 Design,
Bolted Bonnet, OS&Y,
Screwed-in Back seat, Rising Stem,
Non-rising Handwheel,
Flexible Wedge

Figure NO.:

G15R,C00/5
G15J,C00/5
G15B,C00/5

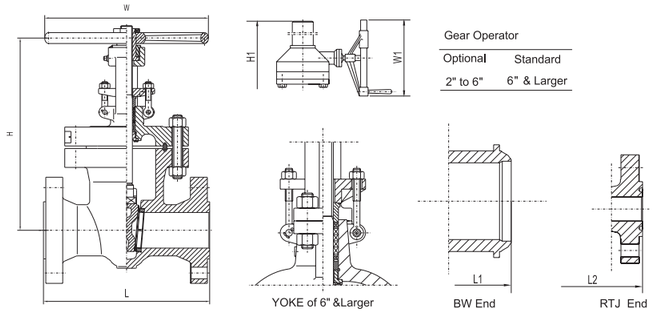

NPS	DN	L & L1 (RF&BW)		L2(RTJ)		W		W1		H		H1		WT(RF)	WT(BW)
in	mm	in	mm	in	mm	in	mm	in	mm	in	mm	in	mm	Kg	Kg
2"	50	14.5	368	14.62	371	14	350	12	305	22	550	26	648	95	76
2.5"	65	16.5	419	16.62	422	12	300	—	—	23	582	—	—	131	105
3"	80	18.5	470	18.62	473	20	500	12	305	26	648	26	667	180	125
4"	100	21.5	546	21.62	549	22	550	18	458	28	700	30	759	248	205
5"	125	26.5	673	26.61	676	24	600	18	458	35	900	39	1000	510	420
6"	150	27.75	705	28	711	24	600	18	458	39	984	43	1091	590	505
8"	200	32.75	832	33.13	842	—	—	18	458	—	—	51	1290	1086	910
10"	250	39	991	39.38	1000.5	—	—	18	458	—	—	54	1372	1786	1485
12"	300	44.5	1130	45.12	1146	—	—	24	610	—	—	65	1639	2766	2386
14"	350	49.5	1257	50.25	1276	—	—	24	610	—	—	70	1768	3605	2970
16"	400	54.5	1384	55.38	1407	—	—	24	610	—	—	72	1836	4410	3665
18"	450	60.5	1537	61.4	1559	—	—	39	1000	—	—	87	2220	6040	5145
20"	500	65.5	1664	66.4	1686	—	—	31	800	—	—	121	3078	8270	7045
22"	550	71	1804	72.1	1832	—	—	39	1000	—	—	131	3320	11325	9645
24"	600	76.5	1943	77.6	1972	—	—	39	1000	—	—	141	3570	15511	13212
26"	650	82	2083	83.1	2111	—	—	47	1200	—	—	151	3836	21243	18096
28"	700	87.5	2223	88.6	2251	—	—	47	1200	—	—	158	4012	29095	24784
30"	750	93	2362	94.1	2390	—	—	47	1200	—	—	172	4368	39849	33944
32"	800	100	2540	101.1	2568	—	—	47	1200	—	—	184	4675	54577	46490
34"	850	107.5	2730	108.6	2758	—	—	47	1200	—	—	197	5005	74748	63672
36"	900	115.6	2935	116.7	2963	—	—	47	1200	—	—	211	5360	102375	87205

* (1) For valves larger than 36", Please contact Neway sales or engineering team for details.

NEWAY reserves the right to change design, materials or specifications without notice and is free of obligation to furnish or install such changes on products previously sold.

Class 2500 Cast Carbon Steel Gate Valve

API 600 Design,
Bolted Bonnet OS&Y,Rising Stem,
Non-rising Handwheel,
Flexible Wedge

Figure NO.:

G25R,C00/5
G25J,C00/5
G25B,C00/5

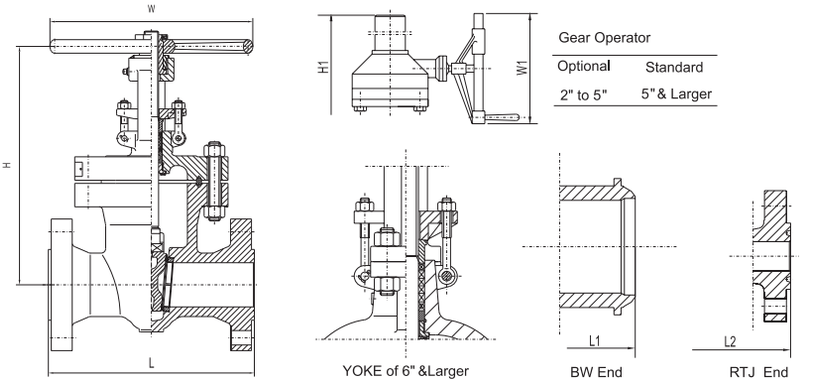

NPS	DN	L & L1 (RF&BW)		L2(RTJ)		W		W1		H		H1		WT(RF)	WT(BW)
in	mm	in	mm	in	mm	in	mm	in	mm	in	mm	in	mm	Kg	Kg
2"	50	17.76	451	17.88	454	18	450	12	305	22	571	27	680	150	120
2.5"	65	20	508	20.25	514	16	400	—	—	25	637	—	746	200	150
3"	80	22.76	578	23	584	22	550	18	458	28	703	32	812	279	223
4"	100	26.5	673	26.88	683	26	650	18	458	29	742	34	861	305	285
5"	125	31.26	794	31.77	807	—	—	24	610	—	—	37	950	650	540
6"	150	35.98	914	36.5	927	—	—	18	458	—	—	38	968	1116	896
8"	200	40.24	1022	40.88	1038	—	—	28	710	—	—	51	1302	1860	1552
10"	250	50	1270	50.88	1292	—	—	31	800	—	—	72	1837	3885	3275
12"	300	55.98	1422	56.88	1445	—	—	32	810	—	—	76	1940	4925	4110
14"	350	62.01	1575	62.87	1597	—	—	32	810	—	—	84	2134	7380	6200
16"	400	67.99	1727	69.09	1755	—	—	32	810	—	—	92	2347	11070	9299
18"	450	73.98	1879	75.08	1907	—	—	39	1000	—	—	102	2582	16605	13948
20"	500	79.96	2031	81.06	2059	—	—	39	1000	—	—	112	2840	24908	20922
22"	550	85.94	2183	87.05	2211	—	—	39	1000	—	—	123	3124	37360	31380
24"	600	91.93	2335	93.03	2363	—	—	39	1000	—	—	135	3436	56040	47074

* (1) For valves larger than 24", Please contact Neway sales or engineering team for details.

NEWAY reserves the right to change design, materials or specifications without notice and is free of obligation to furnish or install such changes on products previously sold.

Torque & Thrust

Gate Valve

Class	Size	2"					2-1/2"					3"					4"					5"					6"				
Class 150	Pressure Rating	0.6MPa	1MPa	1.5MPa	2MPa	—	0.6MPa	1MPa	1.5MPa	2MPa	—	0.6MPa	1MPa	1.5MPa	2MPa	—	0.6MPa	1MPa	1.5MPa	2MPa	—	0.6MPa	1MPa	1.5MPa	2MPa	—	0.6MPa	1MPa	1.5MPa	2MPa	—
	Number of Turns	14					18					20					22					27					33				
	Thrust (KN)	7.3	7.8	8.4	9.0	—	8.1	8.7	9.3	10.0	—	9.6	10.3	11.2	12.0	—	12.1	13.0	14.2	15.3	—	13.5	14.5	15.6	16.7	—	18.3	19.7	21.4	23.2	—
	Torque (N*M)	14.1	15.0	16.1	17.3	—	15.6	16.6	17.9	19.3	—	20.8	22.3	24.1	26.0	—	30.3	32.5	35.4	38.3	—	37.0	39.5	42.6	45.7	—	49.8	53.0	58.7	63.5	—
Class 300	Pressure Rating	1MPa	2MPa	3MPa	4MPa	5.1MPa	1MPa	2MPa	3MPa	4MPa	5.1MPa	1MPa	2MPa	3MPa	4MPa	5.1MPa	1MPa	2MPa	3MPa	4MPa	5.1MPa	1MPa	2MPa	3MPa	4MPa	5.1MPa	1MPa	2MPa	3MPa	4MPa	5.1MPa
	Number of Turns	14					18					20					22					28					33				
	Thrust (KN)	7.8	9.0	10.2	11.3	12.6	8.7	10.0	11.4	12.8	14.3	10.3	12.0	13.7	15.4	17.3	13.0	15.3	17.6	20.0	24.1	17.9	20.9	24.1	29.7	35.8	20.3	23.9	30.9	38.5	46.9
	Torque (N*M)	15.0	17.3	19.5	21.8	24.3	16.6	19.3	21.9	25.4	27.4	22.3	26.0	29.6	33.2	37.3	32.5	38.3	44.0	50.0	60.1	48.9	57.3	66.0	81.1	97.9	60.3	71.1	91.8	114.5	139.5
Class 600	Pressure Rating	3MPa	5MPa	6.5MPa	8MPa	10.2MPa	3MPa	5MPa	6.5MPa	8MPa	10.2MPa	3MPa	5MPa	6.5MPa	8MPa	10.2MPa	3MPa	5MPa	6.5MPa	8MPa	10.2MPa	3MPa	5MPa	6.5MPa	8MPa	10.2MPa	3MPa	5MPa	6.5MPa	8MPa	10.2MPa
	Number of Turns	14					18					17					23					22					26				
	Thrust (KN)	12.2	14.5	16.3	18.0	20.6	13.4	16.2	18.2	20.3	23.3	16.9	20.5	23.4	26.9	32.2	24.1	30.6	36.5	42.3	50.8	31.1	42.9	51.8	60.6	73.6	36.0	49.8	60.2	70.5	85.7
	Torque (N*M)	23.4	27.9	31.3	34.6	39.6	25.7	31.0	35.0	38.9	44.7	42.4	51.3	58.3	67.3	80.4	66.1	83.8	99.7	115.7	139.1	104.5	144.2	173.9	203.6	247.2	129.5	179.2	215.9	253.9	308.6
Class 900	Pressure Rating	5MPa	8MPa	10MPa	13MPa	15.3MPa	5MPa	8MPa	10MPa	13MPa	15.3MPa	5MPa	8MPa	10MPa	13MPa	15.3MPa	5MPa	8MPa	10MPa	13MPa	15.3MPa	5MPa	8MPa	10MPa	13MPa	15.3MPa	5MPa	8MPa	10MPa	13MPa	15.3MPa
	Number of Turns	13					13					18					23										26				
	Thrust (KN)	19.6	23.9	26.9	32.3	34.7	26.1	31.7	35.4	41.0	45.2	28.7	35.1	39.4	45.9	51.7	32.1	42.6	50.2	61.7	70.5	47.4	64.3	75.5	92.4	105.3	49.6	69.8	83.2	103.4	118.9
	Torque (N*M)	48.8	59.8	67.2	78.1	86.6	71.5	86.7	96.8	112.1	123.8	78.4	96.1	107.9	125.6	141.3	95.6	126.6	179.4	183.6	209.8	176.0	238.6	280.3	342.9	390.8	190.3	267.8	319.4	396.8	456.2
Class 1500	Pressure Rating	5MPa	10MPa	15MPa	20MPa	25.5MPa	5MPa	10MPa	15MPa	20MPa	25.5MPa	5MPa	10MPa	15MPa	20MPa	25.5MPa	5MPa	10MPa	15MPa	20MPa	25.5MPa	5MPa	10MPa	15MPa	20MPa	25.5MPa	5MPa	10MPa	15MPa	20MPa	25.5MPa
	Number of Turns	12					13					17					17										25				
	Thrust (KN)	21.1	28.5	35.8	43.1	51.2	28.4	37.6	46.9	56.2	66.4	32.4	43.7	55.7	68.8	83.1	39.3	56.2	75.0	93.7	114.3	66.4	103.9	141.5	179.1	220.4	56.4	88.3	120.3	152.2	187.3
	Torque (N*M)	52.7	71.1	89.4	107.7	127.8	77.6	103.0	128.3	153.7	181.8	96.4	130.0	165.8	204.5	247.1	132.0	189.0	251.9	314.9	384.2	270.6	423.7	576.9	730.0	898.4	230.0	360.1	490.4	620.5	763.6
Class 2500	Pressure Rating	10MPa	20MPa	30MPa	37MPa	42.5MPa	10MPa	20MPa	30MPa	37MPa	42.5MPa	10MPa	20MPa	30MPa	37MPa	42.5MPa	10MPa	20MPa	30MPa	37MPa	42.5MPa						10MPa	20MPa	30MPa	37MPa	42.5MPa
	Number of Turns	10										14					14										20				
	Thrust (KN)	28.0	41.1	54.2	63.4	70.6	39.3	57.5	75.6	88.3	98.3	43.7	64.5	85.4	99.9	111.4	54.8	82.8	110.8	130.4	145.8						80.2	131.2	182.2	217.9	246.0
	Torque (N*M)	69.9	102.6	135.4	158.3	176.3	107.6	157.2	206.9	241.6	268.9	130	191.9	254	297.3	331.4	184.1	278.2	372.3	438.1	489.9						346.2	566.3	786.4	940.5	1061.6

Class	Size	8"					10"					12"					14"					16"					18"				
Class 150	Pressure Rating	0.6MPa	1MPa	1.5MPa	2MPa	—	0.6MPa	1MPa	1.5MPa	2MPa	—	0.6MPa	1MPa	1.5MPa	2MPa	—	0.6MPa	1MPa	1.5MPa	2MPa	—	0.6MPa	1MPa	1.5MPa	2MPa	—	0.6MPa	1MPa	1.5MPa	2MPa	—
	Number of Turns	43					42					51					55					64					73				
	Thrust (KN)	23. 1	24. 9	27. 3	33. 1	—	28. 8	31. 2	37. 5	47. 1	—	36. 9	40. 0	52. 6	66. 1	—	40. 7	44. 4	60. 1	75. 9	—	48. 2	55. 2	75. 9	96. 6	—	55. 7	67. 1	93. 5	120. 0	—
	Torque (N*M)	68. 6	74. 2	81. 2	98. 4	—	96. 8	104. 9	126. 1	158. 1	—	132. 6	143. 9	189. 2	238. 0	—	156. 4	170. 5	230. 5	291. 3	—	196. 7	224. 9	309. 4	393. 9	—	240. 3	289. 7	403. 7	517. 6	—
Class 300	Pressure Rating	1MPa	2MPa	3MPa	4MPa	5.1MPa	1MPa	2MPa	3MPa	4MPa	5.1MPa	1MPa	2MPa	3MPa	4MPa	5.1MPa	1MPa	2MPa	3MPa	4MPa	5.1MPa	1MPa	2MPa	3MPa	4MPa	5.1MPa	1MPa	2MPa	3MPa	4MPa	5.1MPa
	Number of Turns	35					43					51					56					64					71				
	Thrust (KN)	26.2	34.5	47.3	60.1	74.2	34.5	50.6	69.9	89.2	110.5	40.7	67.0	94.2	121. 5	151. 4	45. 9	77. 7	109. 7	141. 7	176. 9	55. 9	97. 5	139. 2	180. 8	226. 5	72. 6	124. 4	176. 2	228. 0	285. 0
	Torque (N*M)	87.9	116.0	159.0	202.0	249.3	124.1	182.1	251.6	321.2	397.7	156.3	257.1	361.7	466. 2	581. 2	187. 2	316. 8	447. 2	577. 6	721. 0	241. 4	420. 9	600. 5	780. 1	977. 6	330. 4	566. 3	802. 2	1038. 2	1297. 7
Class 600	Pressure Rating	3MPa	5MPa	6.5MPa	8MPa	10.2MPa	3MPa	5MPa	6.5MPa	8MPa	10.2MPa	3MPa	5MPa	6.5MPa	8MPa	10.2MPa	3MPa	5MPa	6.5MPa	8MPa	10.2MPa	3MPa	5MPa	6.5MPa	8MPa	10.2MPa	3MPa	5MPa	6.5MPa	8MPa	10.2MPa
	Number of Turns	34					42					50					41					47					53				
	Thrust (KN)	48.8	70.7	87.1	103.6	127.6	64.0	96.5	120.9	145.3	181.1	90.7	136.5	170.8	205.2	255.5	105.9	159.5	199.7	240	299	128.9	197.8	249.5	301.2	377.1	139.7	214.5	270.5	326.6	408.8
	Torque (N*M)	187.3	271.4	334.4	397.5	489.9	276.3	416.6	521.9	627.2	781.6	413.1	621.6	777.9	934.3	1163.7	554.5	841.8	1054	1265.7	1577.6	710.7	1091.1	1376.3	1661.5	2079.9	803.8	1234	1556.7	1879.4	2352.6
Class 900	Pressure Rating	5MPa	8MPa	10MPa	13MPa	15.3MPa	5MPa	8MPa	10MPa	13MPa	15.3MPa	5MPa	8MPa	10MPa	13MPa	15.3MPa	5MPa	8MPa	10MPa	13MPa	15.3MPa	5MPa	8MPa	10MPa	13MPa	15.3MPa	5MPa	8MPa	10MPa	13MPa	15.3MPa
	Number of Turns	34					31					36					41					47					34				
	Thrust (KN)	71.8	104.0	125.4	157.6	182.2	113.4	161.3	193.2	241.1	277.9	145.8	211.4	255.0	320.6	370.8	171.1	251.7	305.5	386.2	448.0	184.8	271.9	330.0	417.1	483.9	238.9	349.3	422.9	533.2	617.9
	Torque (N*M)	310.0	448.8	541.3	680.0	786.3	571.3	812.7	973.6	1214.9	1400.0	769.5	1115.3	1345.8	1691.7	1956.8	943.5	1388.4	1685.0	2129.9	2471.1	1063.6	1564.9	1899.0	2400.2	2784.5	1719.8	2514.4	3044.0	3838.5	4447.7
Class 1500	Pressure Rating	5MPa	10MPa	15MPa	20MPa	25.5MPa	5MPa	10MPa	15MPa	20MPa	25.5MPa	5MPa	10MPa	15MPa	20MPa	25.5MPa	5MPa	10MPa	15MPa	20MPa	25.5MPa	5MPa	10MPa	15MPa	20MPa	25.5MPa	5MPa	10MPa	15MPa	20MPa	25.5MPa
	Number of Turns	24					29					35										29									
	Thrust (KN)	90.3	141.4	192.4	243.6	299.8	122.1	197.9	273.7	349.6	433.0	149.6	249.4	349.2	449.0	558.7	186.4	308.3	430.3	552.4	686.7	198.0	331.8	465.7	599.5	746.8	273.8	446.5	619.2	791.9	981.8
	Torque (N*M)	454.8	712.2	969.7	1227.1	1510.4	702.5	1138.8	1575.1	2011.4	2491.4	932.3	1554.1	2175.9	2797.7	3481.7	1340.4	2219.1	3097.8	3976.6	4943.3	1424.8	2388.7	3352.2	4315.8	5375.7	2363.5	3853.9	5344.3	6834.7	8474.1
Class 2500	Pressure Rating	10MPa	20MPa	30MPa	37MPa	42.5MPa	10MPa	20MPa	30MPa	37MPa	42.5MPa	10MPa	20MPa	30MPa	37MPa	42.5MPa	10MPa	20MPa	30MPa	37MPa	42.5MPa	10MPa	20MPa	30MPa	37MPa	42.5MPa					
	Number of Turns	19					16					19					24					25									
	Thrust (KN)	131.6	214.4	297.2	355.1	400.7	194.8	321.1	447.5	535.6	605.6	248.0	418.1	588.2	707.3	800.9	310.8	512.1	713.4	854.4	965.1	396.2	671.9	947.7	1154.0	1292.3					
	Torque (N*M)	725.9	1182.5	1639.1	1958.7	2209.9	1355.7	2235.0	3114.2	3731.3	4214.9	1903.6	3209.5	4515.5	5429.5	6149.8	2534.4	4175.8	5817.1	6966.1	7868.9	3608.6	6119.8	8631.0	10510.8	11770.0					

Note: 1. All above data are based on Single Head thread.

2. Torques shown in these tables are to be used as a guide for actuaor selection. A safety factor of 1.25 ~1.5 is recommended for actuator sizing.

NEWAY reserves the right to change design, materials or specifications without notice and is free of obligation to furnish or install such changes on products previously sold.

NEWAY reserves the right to change design, materials or specifications without notice and is free of obligation to furnish or install such changes on products previously sold.

Torque & Thrust

Gate Valve

Class	Size	20"					22"					24"					26"					28"					30"				
Class 150	Pressure Rating	0.6MPa	1MPa	1.5MPa	2MPa	—	0.6MPa	1MPa	1.5MPa	2MPa	—	0.6MPa	1MPa	1.5MPa	2MPa	—	0.6MPa	1MPa	1.5MPa	2MPa	—	0.6MPa	1MPa	1.5MPa	2MPa	—	1MPa	1.5MPa	2MPa	—	—
	Number of Turns	81					68					74					80					85					93				
	Thrust (KN)	69.8	75.5	104.0	132.4	—	79.8	101.5	141.3	181.1	—	92.2	104.2	145.5	186.9	—	94.3	123.4	172.2	221.0	—	90.5	126.3	182.9	239.6	—	158.1	223.2	288.4	—	—
	Torque (N*M)	317.7	343.9	473.4	602.9	—	402.1	511.6	712.1	912.6	—	486.4	549.9	768.0	986.2	—	542.9	710.3	990.9	1271.4	—	520.9	726.5	1052.5	1378.5	—	985.4	1391.1	1796.9	—	—
Class 300	Pressure Rating	1MPa	2MPa	3MPa	4MPa	5.1MPa	1MPa	2MPa	3MPa	4MPa	5.1MPa	1MPa	2MPa	3MPa	4MPa	5.1MPa	1MPa	2MPa	3MPa	4MPa	5.1MPa	1MPa	2MPa	3MPa	4MPa	5.1MPa	1MPa	2MPa	3MPa	4MPa	5.1MPa
	Number of Turns	61					66					72					79					87					61				
	Thrust (KN)	77.8	133.6	189.5	245.3	306.7	90.0	156.0	222.0	288.0	348.0	107.3	188.7	270.1	351.5	441.0	124.5	221.0	317.5	414.0	520.2	140.3	252.6	364.9	477.3	600.8	176.7	300.0	430.9	561.8	705.8
	Torque (N*M)	391.9	673.2	954.6	1235.9	1545.4	474.6	822.9	1171.3	1519.6	1836.2	617.5	1085.9	1544.2	2022.6	2537.7	775.5	1377.0	1978.5	2580.1	3241.8	874.0	1574.0	2274.0	2974.1	3744.1	1356.4	2302.7	3307.5	4312.4	5417.7
Class 600	Pressure Rating	3MPa	5MPa	6.5MPa	8MPa	10.2MPa						3MPa	5MPa	6.5MPa	8MPa	10.2MPa						3MPa	5MPa	6.5MPa	8MPa	10.2MPa	3MPa	5MPa	6.5MPa	8MPa	10.2MPa
	Number of Turns	59										46										54					58				
	Thrust (KN)	166.5	257.7	326.1	394.5	494.8						215.8	346.9	445.3	543.7	687.9						327.9	506.4	640.2	774.1	970.4	366	569.9	722.8	875.7	1100
	Torque (N*M)	1037.3	1605.7	2032	2458.3	3083.5						1553.5	2497.5	3205.5	3913.5	4951.9						2830.2	4370.5	5525.8	6681	8375.4	3159.2	4918.9	6238.6	7558.4	9494
Class 900	Pressure Rating	5MPa	8MPa	10MPa	13MPa	15.3MPa						5MPa	8MPa	10MPa	13MPa	15.3MPa															
	Number of Turns	38																													
	Thrust (KN)	279.5	415.7	506.5	642.6	747.0						397.4	586.6	712.7	901.9	1046.9															
	Torque (N*M)	2145.5	3190.8	3887.7	4933.0	5734.4						3240.5	4782.9	5811.1	7353.4	8536.0															
Class 1500	Pressure Rating	5MPa	10MPa	15MPa	20MPa	25.5MPa						5MPa	10MPa	15MPa	20MPa	25.5MPa															
	Number of Turns																														
	Thrust (KN)	335.4	553.6	771.8	990.0	1230.0						454.0	769.6	1085.2	1400.8	1747.9															
	Torque (N*M)	3054.4	5041.9	7029.4	9016.9	11203.1						5001.5	8477.9	11954.3	15430.7	19254.8															

Class	Size	32"					34"					36"					38"					40"				
Class 150	Pressure Rating	1MPa	1.5MPa	2MPa	—	—	1MPa	1.5MPa	2MPa	—	—	1MPa	1.5MPa	2MPa	—	—	1MPa	1.5MPa	2MPa	—	—	1MPa	1.5MPa	2MPa	—	—
	Number of Turns	97					68					72					76					81				
	Thrust (KN)	171.1	242.6	314.2	—	—	196.9	278.5	360.1	—	—	217.0	307.5	398.0	—	—	236.2	337.2	438.1	—	—	261.7	373.4	485.2	—	—
	Torque (N*M)	1065.9	1511.9	1957.8	—	—	1370.1	1938.0	2505.9	—	—	1561.7	2213.3	2864.9	—	—	1813.4	2588.1	3362.8	—	—	2008.5	2866.3	3724.1	—	—
Class 300	Pressure Rating	1MPa	2MPa	3MPa	4MPa	5.1MPa	1MPa	2MPa	3MPa	4MPa	5.1MPa	1MPa	2MPa	3MPa	4MPa	5.1MPa						1MPa	2MPa	3MPa	4MPa	5.1MPa
	Number of Turns						68					73														
	Thrust (KN)	184.4	330.5	476.7	622.9	783.7	199.0	350.0	500.0	652.0	818.0	237.0	420.3	603.5	786.8	988.4						282.2	510.7	739.2	967.7	1219.1
	Torque (N*M)	1415.1	2537.3	3659.5	4781.6	6016.0	1625.0	2856.0	4087.0	5318.0	6672.0	1932.2	3426.6	4921.1	6415.5	8059.3						3050.0	5519.6	7989.3	10459.0	13175.6
Class 600	Pressure Rating	3MPa	5MPa	6.5MPa	8MPa	10.2MPa	3MPa	5MPa	6.5MPa	8MPa	10.2MPa	3MPa	5MPa	6.5MPa	8MPa	10.2MPa						3MPa	5MPa	6.5MPa	8MPa	10.2MPa
	Number of Turns						65																			
	Thrust (KN)	382.2	595	754.7	914.4	1148.6	459.5	719.4	914.2	1109.1	1395	524.2	821.8	1045	1268.2	1595.6						682.9	1083.2	1383.5	1683.7	2124.1
	Torque (N*M)	3662.7	5703.4	7234	8764.6	11009.5	4192.8	6551.9	8326.9	10102	12705.5	5527.7	8665.8	11019.4	13372.9	16824.7						7522.4	11932.1	15240.3	18546.8	23397.6

Class	Size	42"					48"					52"					54"				
Class 150	Pressure Rating	1MPa	1.5MPa	2MPa	—	—	1MPa	1.5MPa	2MPa	—	—	1MPa	1.5MPa	2MPa	—	—	1MPa	1.5MPa	2MPa	—	—
	Number of Turns	82					101										109				
	Thrust (KN)	298.9	421.5	554.1	—	—	376.5	536.4	696.3	—	—	445.3	635.1	824.9	—	—	472.4	675.8	879.2	—	—
	Torque (N*M)	2437.0	3436.6	4436.2	—	—	3249.3	4629.4	6009.5	—	—	4055.6	5784.5	7513.4	—	—	5219.2	7466.3	9713.4	—	—
Class 300	Pressure Rating	1MPa	2MPa	3MPa	4MPa	5.1MPa	1MPa	2MPa	3MPa	4MPa	5.1MPa										
	Number of Turns																				
	Thrust (KN)	307.0	548.4	789.8	1031.3	1296.8	389.4	714.4	1039.3	1364.3	1504.8										
	Torque (N*M)	2796.0	4995.2	7194.0	9392.7	11811.3	4675.0	8577.6	12478.1	16379.5	18066.1										
Class 600	Pressure Rating	3MPa	5MPa	6.5MPa	8MPa	10.2MPa															
	Number of Turns	82																			
	Thrust (KN)	678.3	1079.5	1390.6	1683	2125															
	Torque (N*M)	7803	12414.3	1530	19331.6	24404.4															

Note: 1. Torques in the tables are calculations at ambient temperature. Considerations of proper safety factors are needed for actuator selection, normally 1.25~1.5.
2. Where the actual pressure is lower than values in the tables, select the most approximate one from those exceeding actual pressure.

NEWAY reserves the right to change design, materials or specifications without notice and is free of obligation to furnish or install such changes on products previously sold.
NEWAY reserves the right to change design, materials or specifications without notice and is free of obligation to furnish or install such changes on products previously sold.

BA Series for Gate & Globe Valves

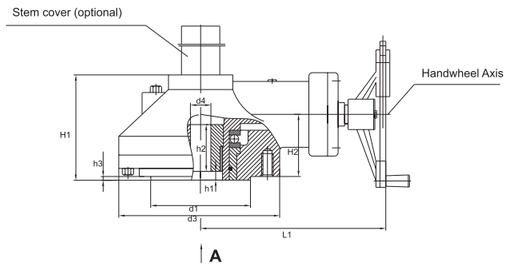

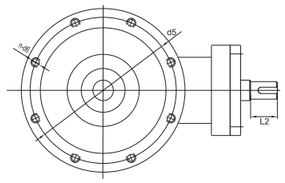

BA-Y Series for Globe Valves

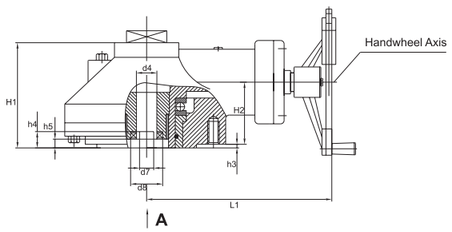

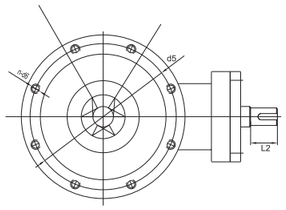

1.Main Material:

Name of parts	Housing	Bevel gear	Output shaft	Stem nut
Material	ASTM A216-WCB	AISI 1045 & 5140	AISI 1045	ASTM A439-D2
Material	ASTM A352-LCB	AISI 1045 & 5140	AISI 1045	ASTM A439-D2

2.Technical Parameters:

Item	Type								
	BA000	BA00	BA0	BA1	BA2	BA3	BA4	BA5	BA6
Allowable torque(N.m)	200	400	750	1500	3000	6000(9000)	10000(15000)	22100	32000
Allowable thrust(KN)	40	100	150	200	350	840	1400	2400	2745
Reduction ratio	4:1	3:1	3:1	4.1:1	6:1	58:1(86:1)	86:1(104:1)	104:1(128:1)	125:1
Allowable stem diameter(mm)	25	42	55	62	75	115	125	125	150
Handwheel diameter(mm)	305	305	305	460	610	810	1000	1200	1200

Note: The allowable torque and the ratio parammeter in the brackets will be selected by the manufacturer.

3.Flange Type and Dimensions (mm)

Code Type	L1	L2	H1	H2	d1	d2	d3	d4(max)	d5	n-d6	d7	d8	h1	h2	h3	h4	h5	Flange type
BA000	200	45	100	59	70(f8)		146	25	102	4-M10	40	51	1	42	3	8	4	F10
BA00	210	60	122	76	100(f8)		178	42	140	4-M16	50	64.5	1	60	4	10	5	F14
BA0	232	60	135	84	130(f8)		210	55	165	4-M20	63	79	1	70	5	15	5	F16
BA1	283	60	160	95	200(f8)		289	62	254	8-M16	70	89	1	75	5	15	5	F25
BA2	370	60	220	140	230(f8)		346	75	298	8-M20	95	119	15	110	5	18	5	F30
BA3	610	60	330	328	260(f8)	428	510	115	356	8-M30	128	166	30	168	5	18	5	F35
BA4	668	110	360	410	300(f8)	475	620	125	406	8-M36	138	188	35	180	8	25	5	F40
BA5	668	110	360	410	370	544	690	125	483	12-M36	150	210	35	180	8	32	5	F48
BA6	1020	60	500	282	470	686	810	150	603	20-M36	178	240	40	230	8	40	5	F60

NEWAY reserves the right to change design, materials or specifications without notice and is free of obligation to furnish or install such changes on products previously sold.

With the enhancement of people ecological awareness since 1960's, especially under the background of nowaday quick economic globalization, protecting environment is becoming common understanding in present global development, whether developed or developing countries, and had led to born associated law and regulation in different fields, including modern process industries.

Industrial valves are one of main pollution sources in modern process industries because of fugitive emission. To minimize the risk of process media leaked through valves to human health, safety and environment, Neway developed low emission technology for all series valves, which featured the essential function of controlling effectively the fugitive emission leakage of various media from valves in virtue of emission defense material using and special structure design, and these valves are measured and tested in accordance with ISO 15848 or Shell SPE 77/312.

Design Features

Low Emission Packing

Neway actively works with reputable and industry leading sealing solution companies to create low emission solutions that can cover valves from cryogenic to extreme high temperature in variety of endurance range down to 10ppm without usage of bellow seal.

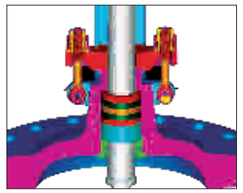

Stuffing box and stem finish

All surface finish for Neway valve's stem and stuffing boxes are tightly controlled to achieve optimized surface finish for the designated sealing solution.

Optional live-loaded eye bolt

Live-loaded eye bolt is optional on customer request. The special structure can maintain a permanent packing stress in virtue of a set of belleville spring, and extend the low emission service life. Neway standard Belleville springs are protected by a weatherproof cap to keep them from environmental contamination so as to ensure a long and continual stable work life.

Fugitive Emission Valve Test

Neway full series low emission gate, globe and check valves hIn addition to type testing, Neway offers production testing capabilities to ISO 15848-2, Shell MESC 77/312 or other customized testing standards. The table below presents typical test parameters.

Test Standard	ISO 15848	Neway Acceptable Level	
Test Medium	97% Helium	Stem Seal Leakage Rate	ISO 15848 class B $1.78x10^{-7}$ $Pa.m^3/s$ (Per mm Stem diameter)
Test Pressure	Valve body pressure equals to the one specified in ASME B16.34 at selected temperature	Mechanical Cycles	100
Test Equipment	Helium Spectrometer	Temperature	-196 ～ 450℃

NEWAY reserves the right to change design, materials or specifications without notice and is free of obligation to furnish or install such changes on products previously sold.

For servicing H_2S-containing environments in oil and gas production, Neway offers NACE valve made of the component metal materials specially heat-treated and hardness-controlled in compliance with NACE standard Mr0175 or 0103, so as to resist all mechanisms of cracking that can be caused by H_2S, including sulfide stress cracking (SSC), stress corrosion cracking (SCC), and other hydrogen-induced cracking. Below table show typical Nace material configuration for Neway cast steel gate valves:

NACE Valves Compared to API 600 Valves

Valve Parts	ASTM Specification	API 600 Valves	NACE Valves
Body/Bonnet	A216 Gr. WCB	⩽ 22HRC	⩽ 22HRC
Wedge	A216 Gr. WCB or A217 CA15	Quenching + High Temperature Tempering 25~30HRC	Quenching + Double Tempering ⩽ 22HRC
Seat Ring	A105 + Stellite 6 Overlayed	Stress Relieving Tempering Overlay hardness ⩾ 38HRC	Stress Relieving Tempering Overlay hardness ⩾ 38HRC
Stem	A182 F6a	Queching + High Temperature Tempering 17~22HRC	Queching + Double Tempering ⩽ 22HRC
Gland	ANSI 420	Queching + High Temperature Tempering 31~35HRC	Queching + Double Tempering ⩽ 22HRC
Backseat Bushing	ANSI 420	Queching + High Temperature Tempering 31~35HRC	Queching + Double Tempering ⩽ 22HRC
Body/Bonnet Studs		ASTM A193 Grade B7	ASTM A193 Grade B7M
Body/Bonnet Nuts		ASTM A194 Grade 2H	ASTM A194 Grade 2HM

Special Design Feature

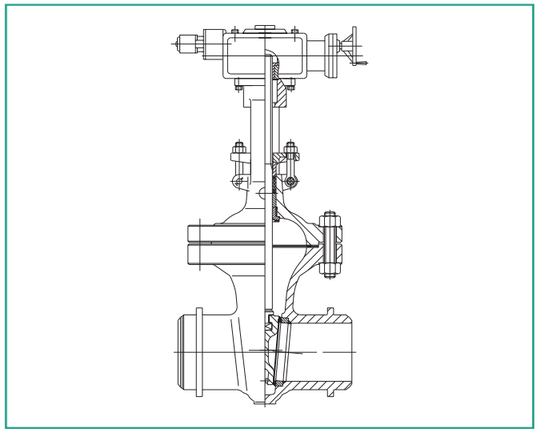

All gate and globe valves can be equipped with electric , Pneumatic or hydraulic actuator, per customer's specfication.

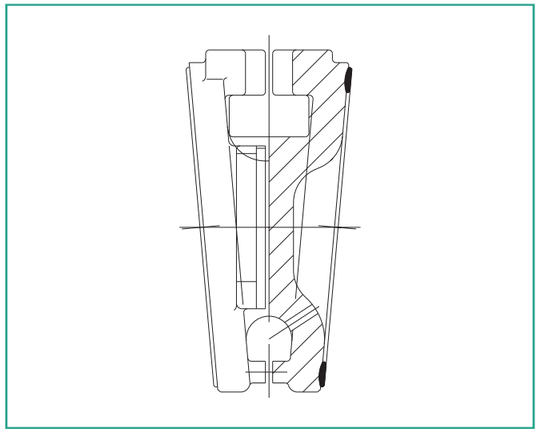

Pressure relief hole

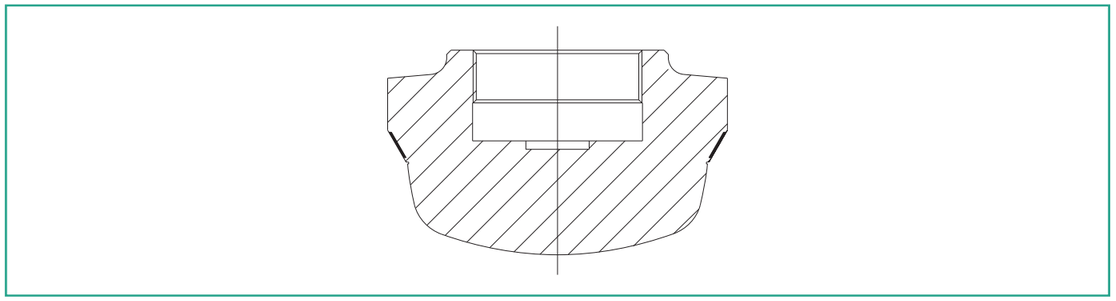

Parabola disc

NEWAY reserves the right to change design, materials or specifications without notice and is free of obligation to furnish or install such changes on products previously sold.

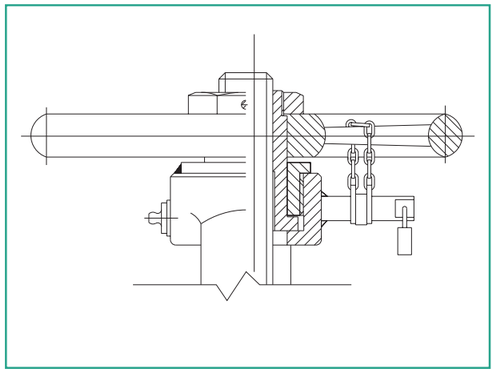

Locking device on the handwheel

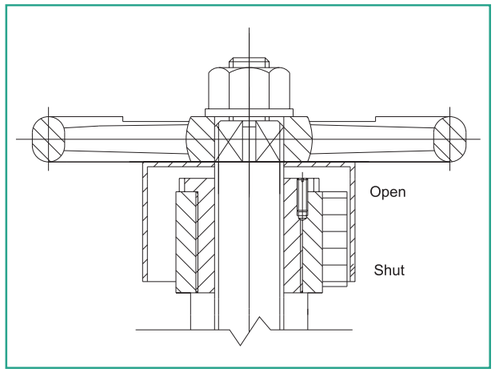

Position indicator on globe valves

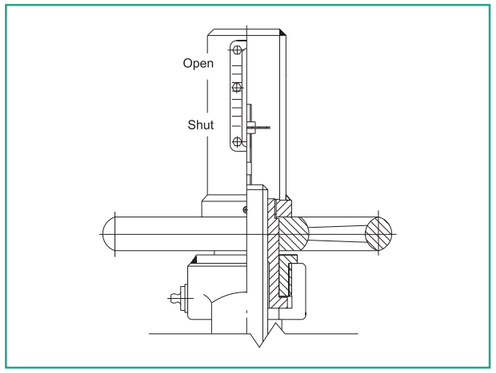

Position indicator on gate valves

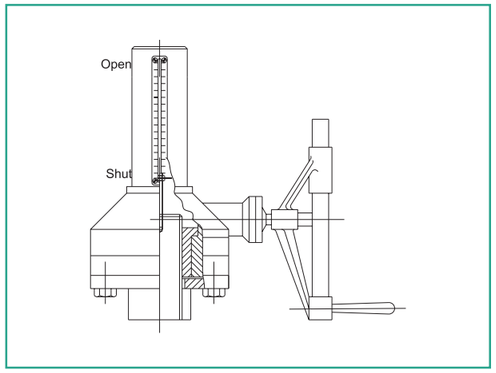

Position indicator on gear box

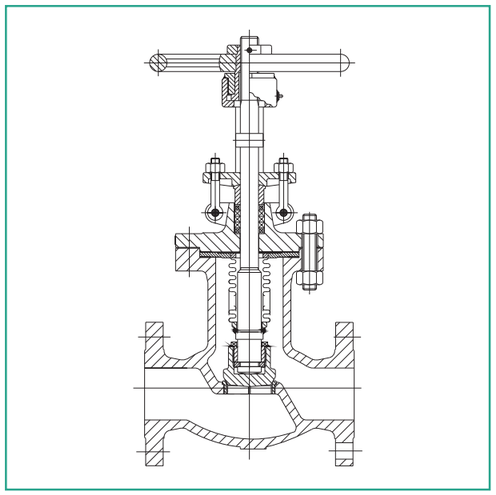

Casting steel bellows sealed valves

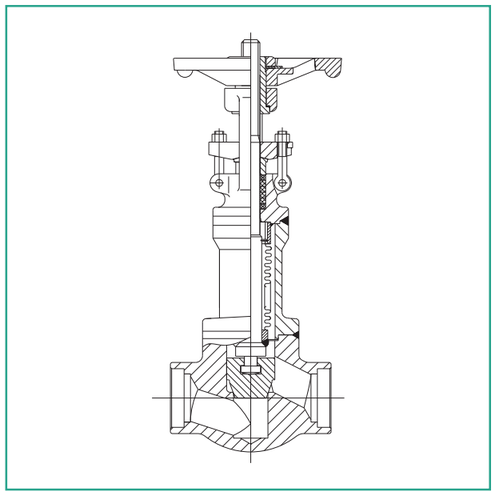

Forging steel bellows sealed valves

NEWAY reserves the right to change design, materials or specifications without notice and is free of obligation to furnish or install such changes on products previously sold.

Special Design Feature

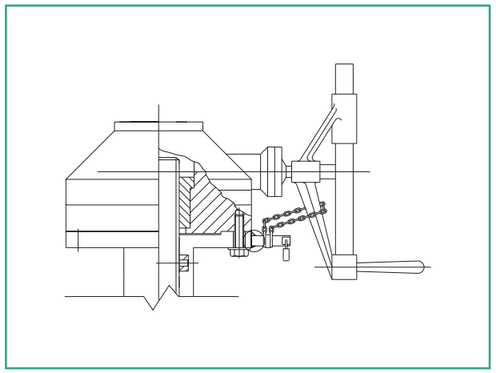

Locking device on the gear box

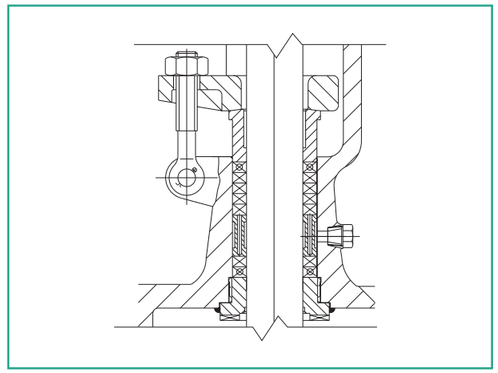

The lantern on the gate and globe valves

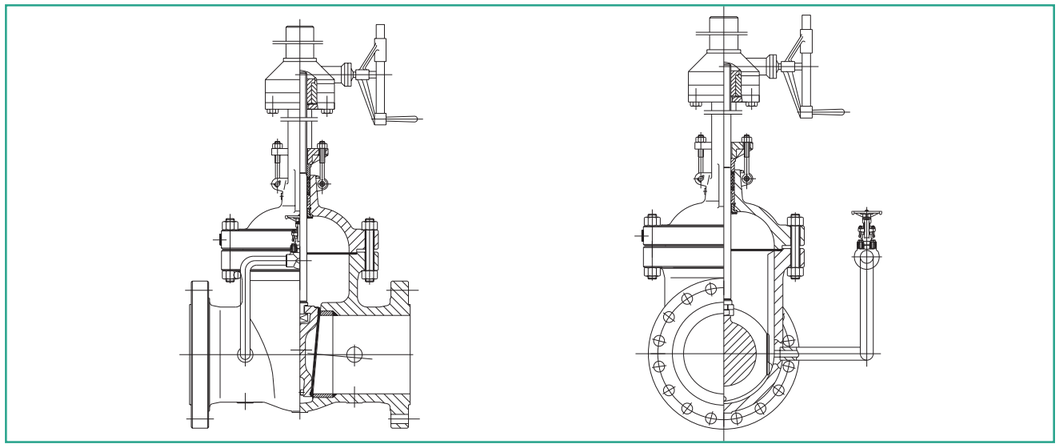

Special by-pass application

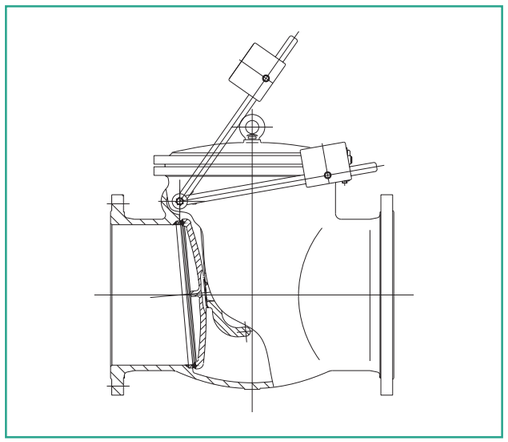

Check valves with damping box
and equilibrium hammers

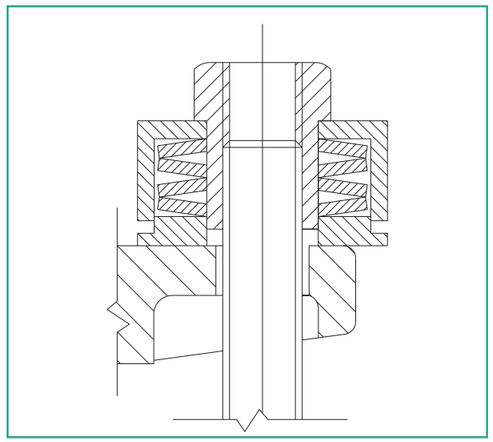

Live-loaded eye bolt

Product Warranty

Seller will replace without charge or refund the purchase price of products provided by Seller which prove to be defective in material or workmanship, provided in each case that the product is properly installed and is used in the service for which Seller recommends it and that written claim, specifying the alleged defect, is presented to the Seller within 18 months from the date of shipment or 12 months after installation, whichever occurs first. Seller shall in no event bear any labor, equipment, engineering or other costs incurred in connection with repair of replacement. The warranty stated in this paragraph is in lieu of all other warranties, either expressed or implied. With respect to warranties, this paragraph states Buyer's exclusive remedy and seller's exclusive liability.

NEWAY reserves the right to change design, materials or specifications without notice and is free of obligation to furnish or install such changes on products previously sold.