Semi-rotary drives DRVS

★	Festo Core Range Solves the majority of your automation tasks	With the Festo Core Range, we have selected the most important products and functions from our broad product catalogue, and added the quickest delivery.
Worldwide:	Quickest delivery – wherever, whenever	The Core Range offers you the best value for your automation tasks.
Simply good:	Expected high Festo quality	
Fast:	Easy and fast to select	

Just look for the star!

Key features

Key features at a glance

- Double-acting semi-rotary drive with vane
- Lighter than other semi-rotary drives
- Modern and compact design
- Fixed swivel angle
- Swivel angle can be adjusted with the help of accessories
- Housing protected against splash water and dust
- No metal fixed stop

The technology in detail

Semi-rotary drive DRVS

Sizes 6, 8

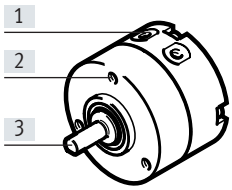

Size: 12 ... 40

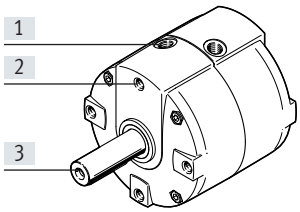

[1] Pneumatic connection
[2] Mounting thread
[3] Drive shaft:
Size 6 ... 16: with flat
Size 25 ... 40: with featherkey

Position sensor SRBS

The position sensor is used for sensing the end positions.

Sensing is carried out magnetically and without contact. Two switching points are output.

Key features:

- Quick installation
- Simple and reliable operation using one button
- The end positions of the swivel angle are taught in at the touch of a button
- Only one connecting cable required
- Long service life thanks to sturdy and non-contacting position sensing

Technical data:

- Sensing range: 0 ... 270°
- Repetition accuracy: ≤ 1°
- 2 switching outputs (24 V)
- Switching output: PNP or NPN programmable
- Switching element function: N/O contact or N/C contact programmable

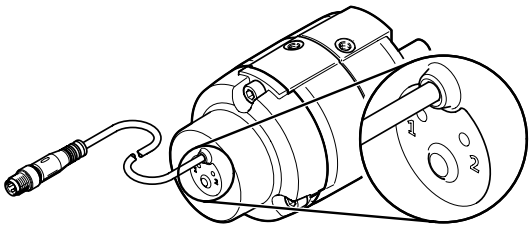

Key features and type codes

Mounting options

With female thread

Size: 6 ... 40

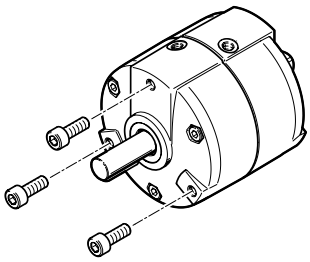

With through-hole

Size: 12 ... 40

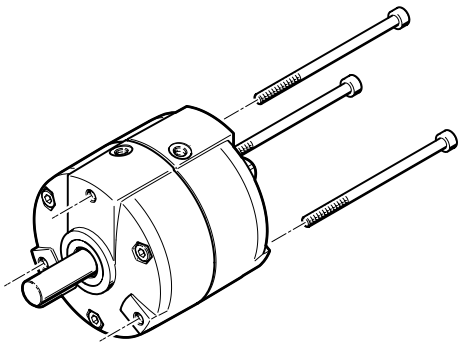

Note

This type of mounting is not permissible in combination with accessories.

Centring via centring collar

Size: 6 ... 40

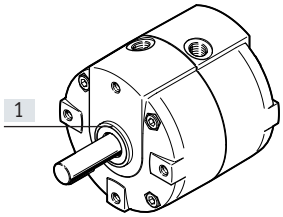

[1] Centring collar

Type codes

001	Series	
DRVS	Semi-rotary drive, double-acting	

002	Size	
6	6	
8	8	
12	12	
16	16	
25	25	
32	32	
40	40	

003	Nominal swivel angle [°]	
90	90	
180	180	
270	270	

004	Cushioning	
P	Elastic cushioning rings/plates on both sides	

005	EU certification	
	None	
EX4	II 2GD	

Peripherals overview

Size 6 and 8

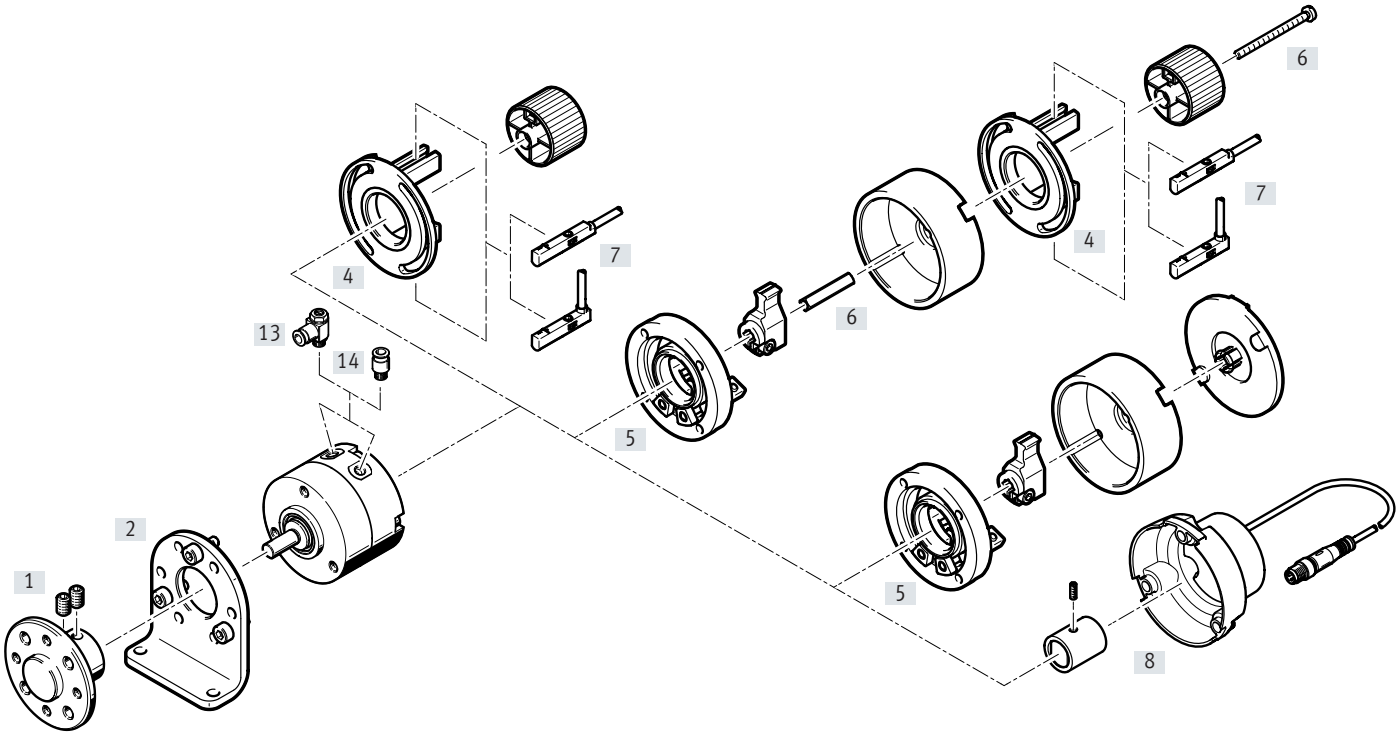

Accessories		Description	→ Page/ Internet
[1]	Push-on flange FWSR/DARF	For mounting attachments	17
[2]	Foot mounting DAMH	• For mounting the semi-rotary drive • Front mounting only	14
[4]	Mounting kit WSM-...-SME-10	• For sensing the swivel angle • For mounting the proximity switches SME-/SMT-10 • Must be ordered separately as an accessory • Can be combined with stop kit KSM • The adapter kit DADP-AK must also be ordered in combination with stop kit KSM → page 18	18
[5]	Stop kit KSM	• For adjusting the swivel angle • Must be ordered separately as an accessory • Can be combined with mounting kit WSM • The adapter kit DADP-AK must also be ordered in combination with mounting kit WSM → page 18	18
[6]	Adapter kit DADP-AK	For attaching mounting kit WSM to stop kit KSM	18
[7]	Proximity switch SME/SMT-10	For sensing the end position	22
[8]	Position sensor SRBS	• For sensing the swivel angle • Can only be mounted directly on the semi-rotary drive, without other accessories • Must be ordered separately as an accessory • The scope of delivery of the position sensor includes a magnet, which must be mounted on the shaft of the semi-rotary drive	19
[13]	One-way flow control valve GRLA	For speed regulation	23
[14]	Push-in fitting QS	For connecting tubing with standard outside diameters	qs

Peripherals overview

Size: 12 ... 40

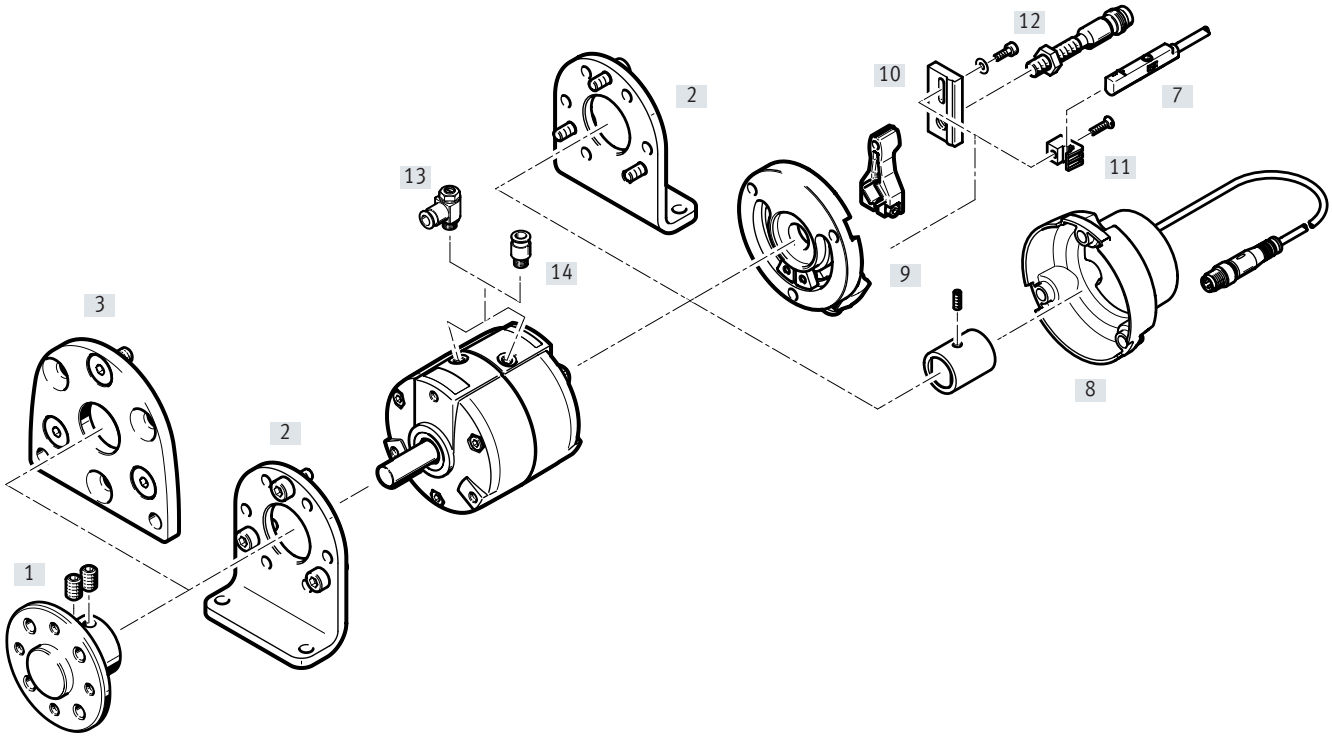

Accessories		Description	➔ Page/ Internet
[1]	Push-on flange DARF	For mounting attachments	17
[2]	Foot mounting DAMH	• For mounting the semi-rotary drive • Mounting at one or both ends	14
[3]	Flange mounting DAMF	For mounting the semi-rotary drive on the front using two mounting holes	16
[7]	Proximity switch SME/SMT-10	For sensing the end position	22
[8]	Position sensor SRBS	• For sensing the swivel angle • Can only be mounted directly on the semi-rotary drive, without other accessories • Must be ordered separately as an accessory • The scope of delivery of the position sensor includes a magnet, which must be mounted on the shaft of the semi-rotary drive	19
[9]	Stop kit DADP-ES	• For adjusting the swivel angle • Must be ordered separately as an accessory	20
[10]	Sensor bracket SL-DSM-S	For mounting the round inductive proximity switch SIEN	22
[11]	Sensor bracket SL-DSM-B	For mounting the proximity switches SME/SMT-10	22
[12]	Proximity switch SIEN	For sensing the end position	23
[13]	One-way flow control valve GRLA	For speed regulation	23
[14]	Push-in fitting QS	For connecting tubing with standard outside diameters	qs

Data sheet

Function

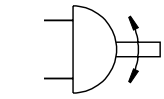

- Ø - Size
6 ... 40

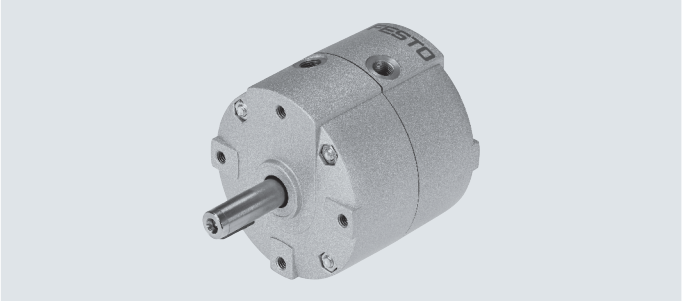

General technical data								
Size		6	8	12	16	25	32	40
Pneumatic connection		M3		M5			G1/8	
Design		Rotary vane						
Cushioning		Elastic cushioning at both ends						
Type of mounting		With female thread						
Mounting position		Any						
Swivel angle	[°]	90, 180		90, 180, 270				
Swivel angle with stop kit KSM, DADP		→ Page 20						
Cushioning angle	[°]	0.5						
Repetition accuracy	[°]	1						
Swivel frequency at 6 bar								
Swivel angle 90°, 180°	[Hz]	3						
Swivel angle 270°	[Hz]	–		2				

Operating and environmental conditions								
Size		6	8	12	16	25	32	40
Operating medium		Compressed air to ISO 8573-1:2010 [7:4:4]						
Note on operating/pilot medium		Lubricated operation possible (in which case lubricated operation will always be required)						
Operating pressure	[MPa]	0.35 ... 0.8		0.25 ... 0.8		0.2 ... 0.8		
	[psi]	51 ... 116		36 ... 116		29 ... 116		
	[bar]	3.5 ... 8		2.5 ... 8		2 ... 8		
Ambient temperature[1]	[°C]	0 ... +60						
Storage temperature	[°C]	20						
Corrosion resistance CRC[2]		1						

1) Note operating range of proximity switches
2) Corrosion resistance class CRC 1 to Festo standard FN 940070
Low corrosion stress. Dry internal application or transport and storage protection. Also applies to parts behind covers, in the non-visible interior area, and parts which are covered in the application (e. g. drive trunnions).

ATEX[1]		
ATEX category for gas		II 2G
Type of ignition protection for gas		Ex h IIC T4 Gb X
ATEX category for dust		II 2D
Type of ignition protection for dust		Ex h IIIC T120°C Db X
Explosion-proof ambient temperature	[°C]	0°C ≤ Ta ≤ +60°C
CE marking (see declaration of conformity)		To EU Explosion Protection Directive (ATEX)

1) Note the ATEX certification of the accessories.

Data sheet

Weights [g]							
Size	6	8	12	16	25	32	40
Swivel angle of 90°	38	68	154	272	502	928	1530
Swivel angle of 180°	38	68	152	270	494	912	1500
Swivel angle of 270°	–	–	150	268	486	896	1470

Materials

Sectional view

DRVS-6/8

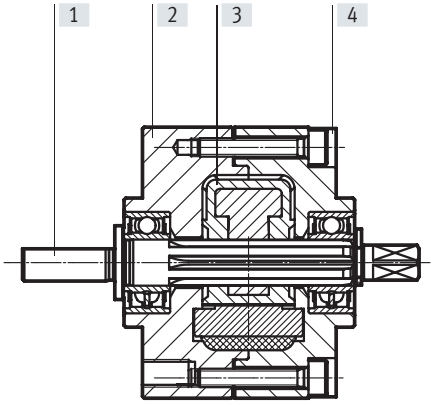

DRVS-12 ... 40

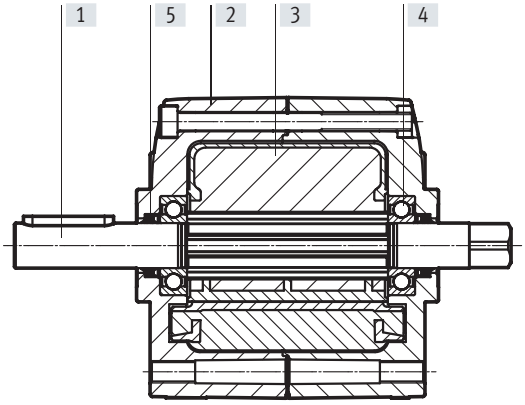

Size		6	8	12	16	25	32	40
[1]	Drive shaft	High-alloy stainless steel			Nickel-plated steel			
[2]	Housing	Anodised wrought aluminium alloy		Painted die-cast aluminium				
[3]	Rotary vane	Reinforced PET						
[4]	Ball bearing	Rolled steel						
[5]	Shaft seal	–		PU				NBR
–	Screws	Galvanised steel						
	Seals	TPE-U(PU)						
	Note on materials	RoHS-compliant						

Forces and torques								
Size		6	8	12	16	25	32	40
Theoretical torque								
at 0.6 MPa (6 bar, 87 psi)	[Nm]	0.15	0.35	1	2	5	10	20
per 0.1 MPa (1 bar, 14.5 psi)	[Nm]	0.025	0.058	0.166	0.33	0.83	1.66	3.33
Permissible stop radius r	[mm]	10	10	15	17	21	28	40
Permissible stop force F	[N]	15	30	90	160	320	480	650
Max. permissible dyn. axial force F_x 1)	[N]	10	10	20	25	40	75	120
Max. permissible dyn. radial force F_z 1)	[N]	15	20	25	30	60	200	350
Max. permissible mass moment of inertia	[$kgm^2 x 10^{-4}$]	6.5	13	50	100	120	200	350

1) The axis of rotation and the centre of the drive shaft are the point of reference for the forces

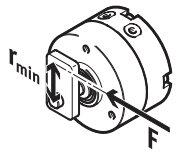

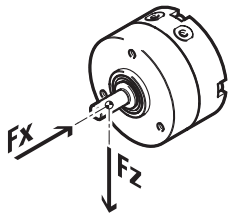

Note

If the semi-rotary drives DRVS are used without a stop system or the mass moment of inertia is exceeded, external stops must be used. A minimum radius relative to the drive shaft (r_{min}) must be observed. The stop force must not exceed the maximum force.

Data sheet

Mass moment of inertia J as a function of swivel time t

Size 6

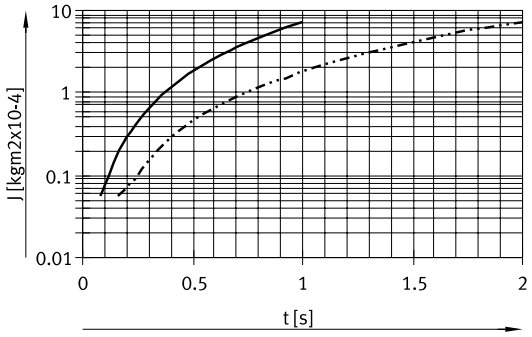

Size 8

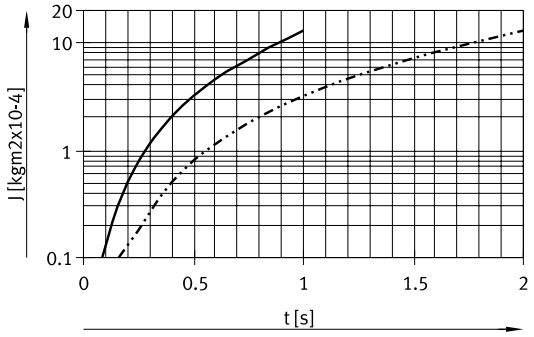

Size 12

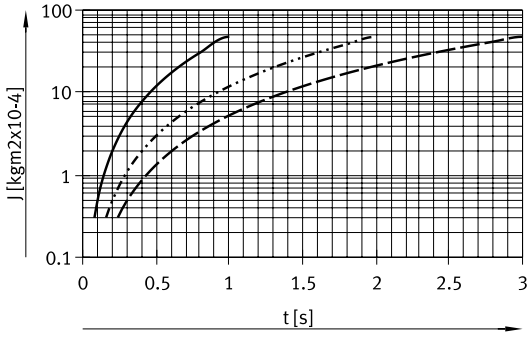

Size 16

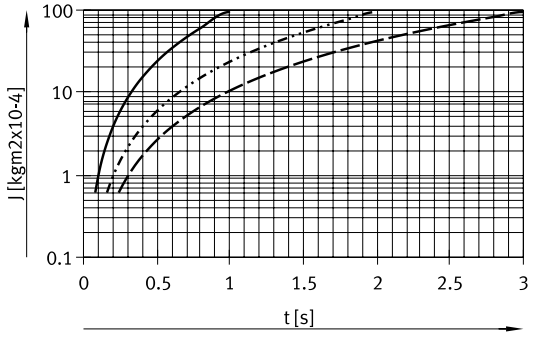

Size 25

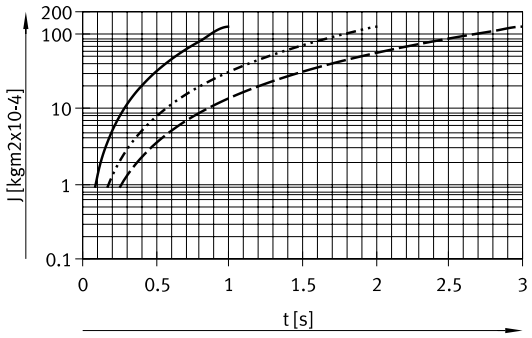

Size 32

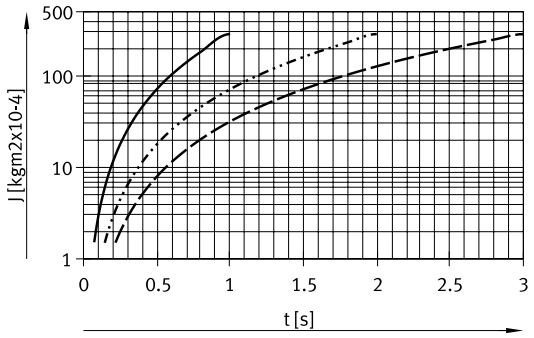

Size: 40

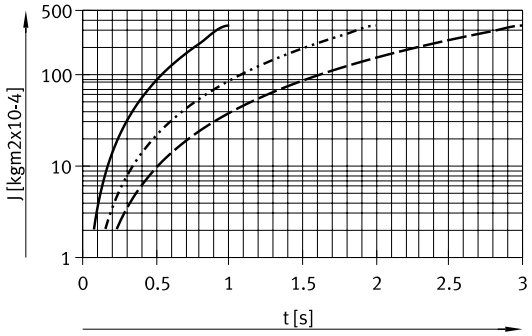

90°
180°
270°

Data sheet

Dimensions Download CAD data ➔ www.festo.com

Size 6/8

Shaft position

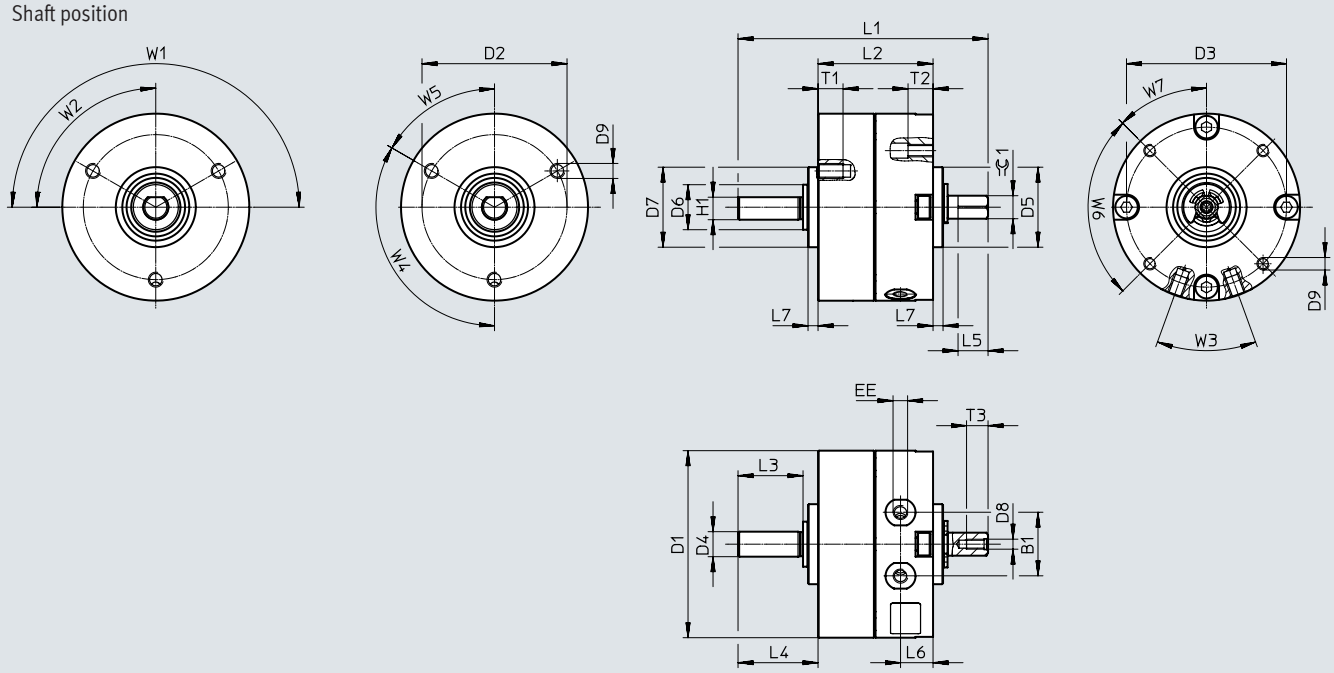

Size	B1	D1 ø ±0.2	D2 ø ±0.1	D3 ø ±0.1	D4 ø g7	D5 ø f8	D6 ø	D7 ø f8	D8	D9
6	10	29.4	24	25	4	14	8	14	M2	M3
8	12.8	37.4	29	32	5	16	9	16	M2	M3

Size	D10	EE	H1 –0.2	L1	L2	L3	L4	L5 –0.2	L6	L7
6	M2	M3	3.5	43	21	10	13	5	6	2
8	M2.5	M3	4.5	50	23	13	16	6	6.5	2

Size	T1 +0.5	T3 +0.5	W1 +5°	W2 +5°	W3	W4	W5	W6	W7	≂ 1
6	5	3.5	180°	90°	40°	120°	60°	90°	45°	3
8	5	4.3								3.5

Data sheet

Dimensions Download CAD data ➔ www.festo.com

Size 12/16

Shaft position

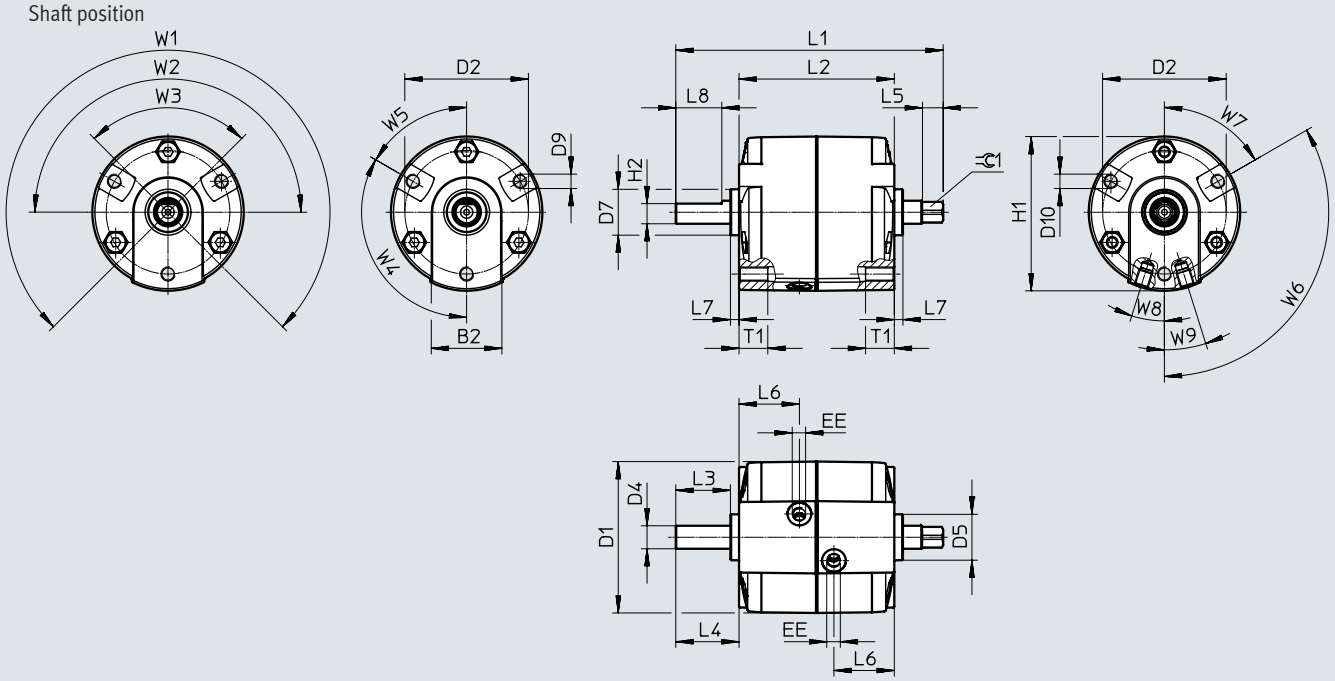

Size	B2	D1 ø	D2 ø ±0.2	D4 ø g7	D5 ø −0.1	D7 ø −0.1	D9	EE	H1
12	24	45.5	36	6	14	14	M4	M5	46.3
16	24.5	52.7	43	8	16	16	M5	M5	53.7

Size	H2 ±0.1	L1	L2 +0.6/−0.2	L3	L4	L5	L6	L7 +0.1/−0.1	L8 +0.4	T1
12	5	73+0.2/−0.1	40.5	17	20+0.4/−0.6	9±0.1	14.8	3	14	8
16	7	93+0.2/−0.2	54	19	22+0.4/−0.7	7.2+0.1	21	3	16	10

Size	W1 +7°	W2 +7°	W3 +7°	W4	W5	W6	W7	W8	W9	⌯ 1
12	270°	180°	90°	120°	60°	120°	60°	19.5°	19.5°	4.5_{h11}
16								17.5°	17.5°	$6_{-0.1}$

Data sheet

Dimensions Download CAD data ➔ www.festo.com

Size 25

Shaft position

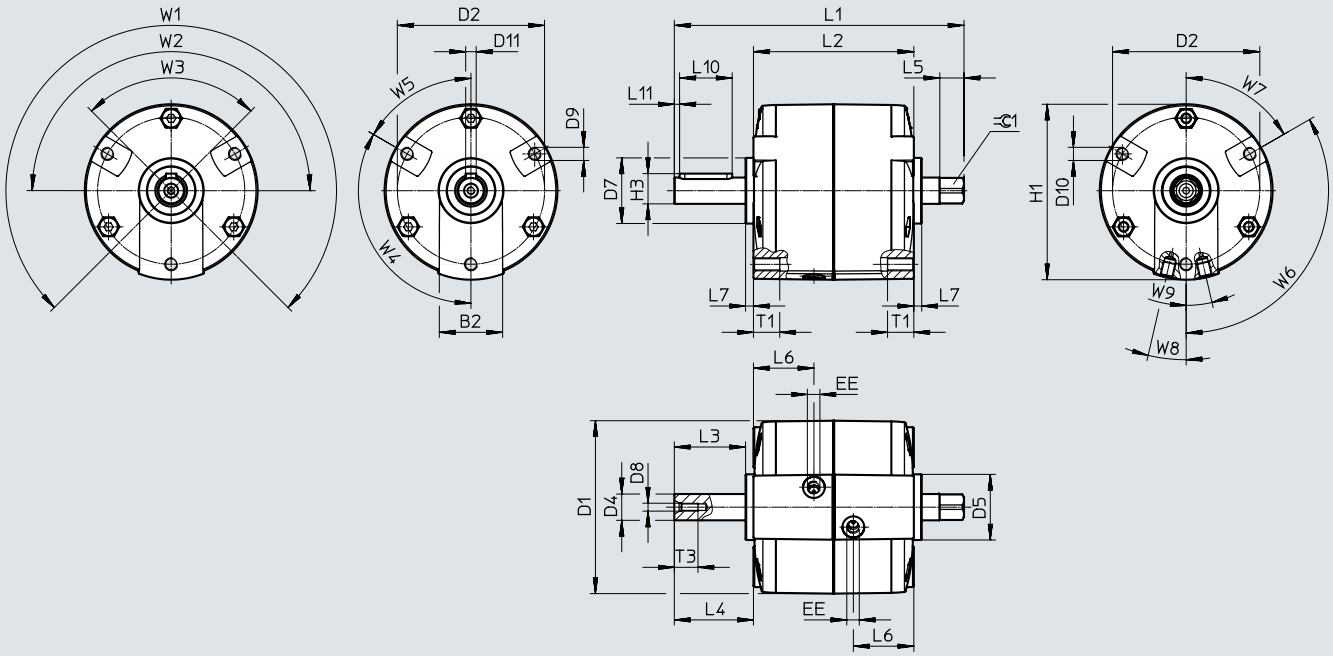

Size	B2	D1 ø	D2 ø ±0.2	D4 ø g7	D5 ø –0.1	D7 ø –0.1	D8	D9	D11 N9
25	24	65.7	56	10	25	25	M3	M5	4

Size	EE	H1	H3 –0.2	L1 +0.2/–0.3	L2 +0.3/–0.2	L3	L4 +0.3/–0.4	L5
25	M5	66.7	11.5	110.2	61	27.1	30.1	9.2

Size	L6	L7 +0.1/–0.1	L10 +0.1	L11	T1	T3 +3	W1 +7°	W2 +7°
25	23	3	20	2	10	9	270°	180°

Size	W3 +7°	W4	W5	W6	W7	W8	W9	⌯ 1 –0.1	Featherkey[1]
25	90°	120°	60°	120°	60°	13°	13°	8	A4x4x20

1) Included in the scope of delivery

Data sheet

Dimensions Download CAD data ➔ www.festo.com

Size 32/40

Shaft position

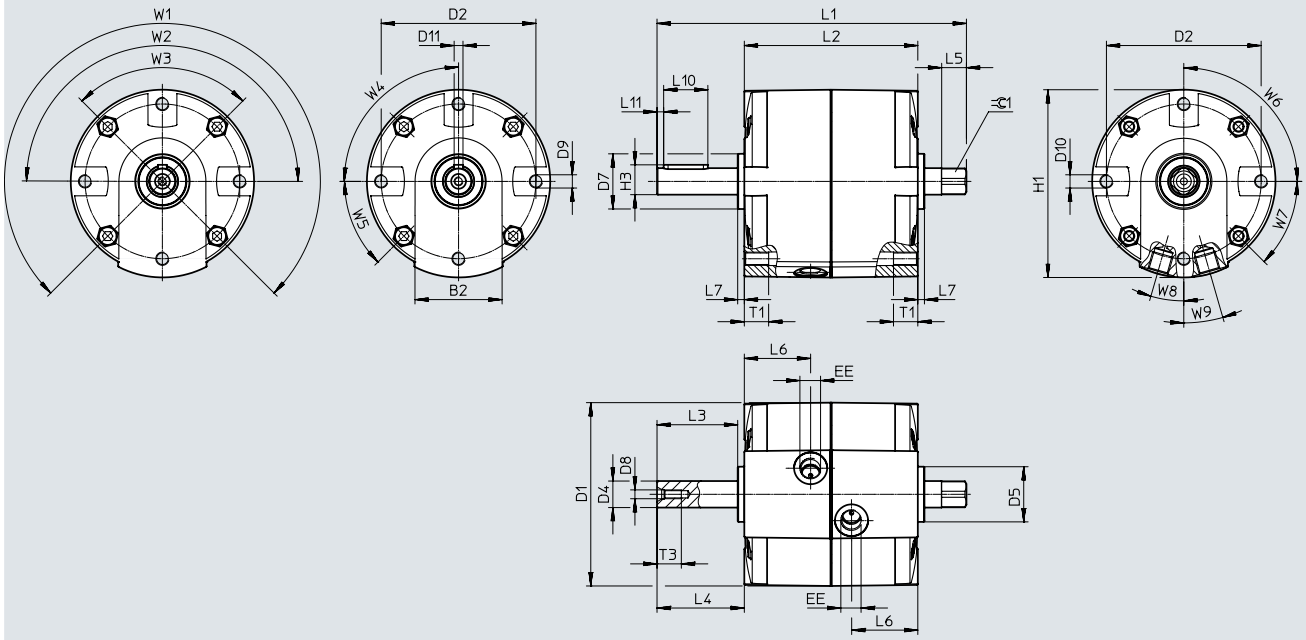

Size	B2	D1 ø	D2 ø ±0.2	D4 ø g7	D5 ø −0.1	D7 ø −0.1	D8	D9	D11 N9
32	39	83	70	12	25	25	M4	M6	4
40	42	100.1	87	17	30	30	M5	M8	5

Size	EE	H1	H3 −0.2	L1 +0.2/−0.3	L2	L3	L4 +0.3/−0.6	L5
32	G1/8	85	13.5	140	78.5+0.5/−0.1	36.5	39.5	11.2
40	G1/8	102.6	19	170	93+0.4	50.5	53.5	16+0.3

Size	L6	L7	L10	L11	T1	T3 +3	W1 +7°	W2 +7°
32	30	3+0.1/−0.2	20+0.1	3	11	11	270°	180°
40	37	3+0.2	36.1+0.3	5	13+3	13		

Size	W3 +7°	W4	W5	W6	W7	W8	W9	⊂ 1 h11	Featherkey to DIN 6885[1)]
32	90°	90°	45°	90°	45°	16°	16°	10	A4x4x20
40						14.5°	14.5°	13	A5x5x36

1) Included in the scope of delivery

Data sheet

★ Core product range

Ordering data – Without ATEX certification

	Size	Swivel angle	Part no.	Type
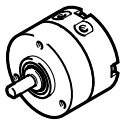	6	90°	★ 1845706	DRVS-6-90-P
		180°	★ 1845707	DRVS-6-180-P
	8	90°	★ 1845708	DRVS-8-90-P
		180°	★ 1845709	DRVS-8-180-P
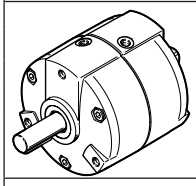	12	90°	★ 1845710	DRVS-12-90-P
		180°	★ 1845711	DRVS-12-180-P
		270°	★ 1845712	DRVS-12-270-P
	16	90°	★ 1845713	DRVS-16-90-P
		180°	★ 1845714	DRVS-16-180-P
		270°	★ 1845715	DRVS-16-270-P
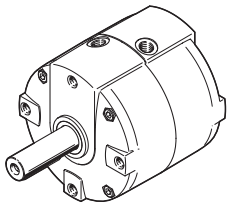	25	90°	★ 1845716	DRVS-25-90-P
		180°	★ 1845717	DRVS-25-180-P
		270°	★ 1845718	DRVS-25-270-P
	32	90°	★ 1845719	DRVS-32-90-P
		180°	★ 1845720	DRVS-32-180-P
		270°	★ 1845721	DRVS-32-270-P
	40	90°	★ 1845722	DRVS-40-90-P
		180°	★ 1845723	DRVS-40-180-P
		270°	★ 1845724	DRVS-40-270-P

Ordering data – With ATEX certification

	Size	Swivel angle	Part no.	Type
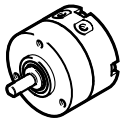	6	90°	2536483	DRVS-6-90-P-EX4
		180°	2536484	DRVS-6-180-P-EX4
	8	90°	2536485	DRVS-8-90-P-EX4
		180°	2536486	DRVS-8-180-P-EX4
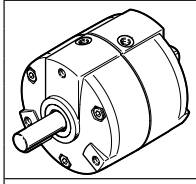	12	90°	2536487	DRVS-12-90-P-EX4
		180°	2536488	DRVS-12-180-P-EX4
		270°	2536489	DRVS-12-270-P-EX4
	16	90°	2536490	DRVS-16-90-P-EX4
		180°	2536491	DRVS-16-180-P-EX4
		270°	2536492	DRVS-16-270-P-EX4
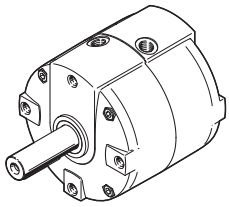	25	90°	2536493	DRVS-25-90-P-EX4
		180°	2536494	DRVS-25-180-P-EX4
		270°	2536495	DRVS-25-270-P-EX4
	32	90°	2536496	DRVS-32-90-P-EX4
		180°	2536497	DRVS-32-180-P-EX4
		270°	2536498	DRVS-32-270-P-EX4
	40	90°	2536499	DRVS-40-90-P-EX4
		180°	2536500	DRVS-40-180-P-EX4
		270°	2536501	DRVS-40-270-P-EX4

Accessories

Foot mounting DAMH
Material:
Galvanised steel
RoHS-compliant

For sizes 6 and 8, foot mountings can only be mounted on the front.

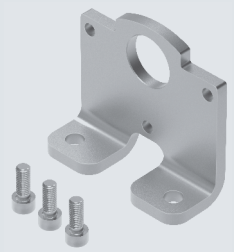

Size 6/8

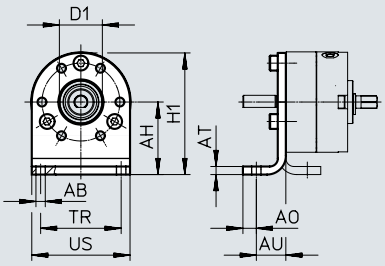

Size 12 ... 25

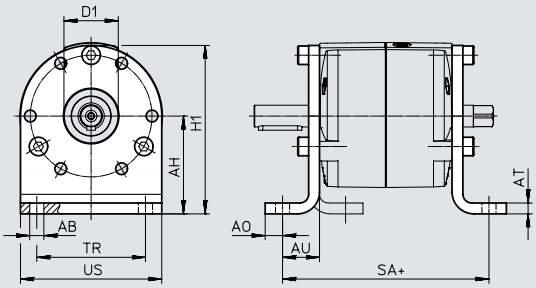

Size 32/40

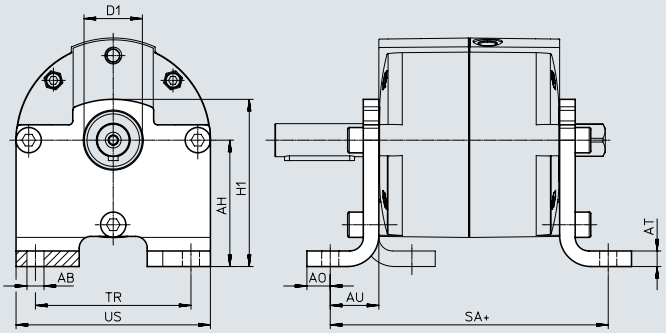

[1] Supply ports

Mounting variants in combination with supply ports

There are three possible mounting options in combination with the foot mounting DAMH and supply ports [1]. The mid-position of the swivel angle is then in position [2].

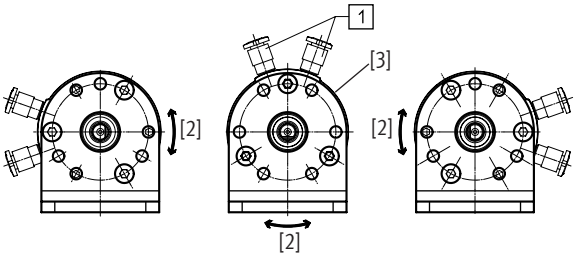

Shaft position in standard position [3] (position of swivel angle)

Size 6/8

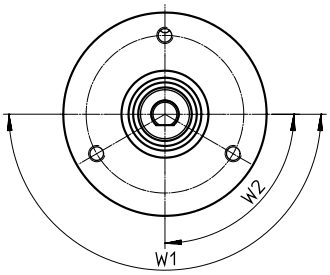

Size 12/16

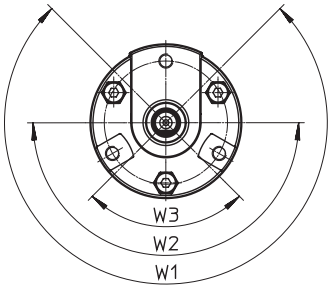

Size 25

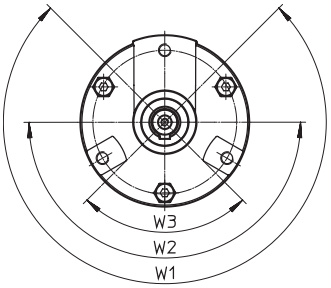

Size 32/40

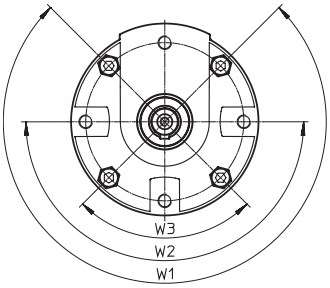

Accessories

Dimensions and ordering data

For size	AB ø H13	AH	AO	AT	AU	D1 ø	H1
6	3.5	22±0.2	4	3	11	$14^{+0.05}$	36.8+0.5/−0.3
8	3.5	27±0.2	5	3	11	$16^{+0.05}$	45.3±0.4
12	5.5	30±0.2	6	4	14	14^{H10}	52+0.5/−0.3
16	5.5	35±0.25	7	4	15	16^{H10}	61+0.5/−0.3
25	6.5	45±0.25	8	5	17	25^{H10}	77.5+0.5/−0.3
32	8.8	55±0.3	11	6	21	25^{H10}	73±0.5
40	8.8	65±0.3	12	8	25	30^{H10}	86±0.5

For size	SA	TR	US	Weight[1)] [g]	Part no.	Type[2)]
6	–	20	29.6+0.3/−0.2	27	**3371840**	**DAMH-Q12-6**
8	–	30	36.6±0.3	40	**3371841**	**DAMH-Q12-8**
12	68.5	30	$44_{-0.5}$	79	**3371842**	**DAMH-Q12-12**
16	84	40	$52_{-0.5}$	111	**3371843**	**DAMH-Q12-16**
25	95	50	$65_{-0.5}$	203	**3371844**	**DAMH-Q12-25**
32	122.5	60	$81.5_{-0.5}$	287	**3371845**	**DAMH-Q12-32**
40	143	80	100±0.3	529	**3371846**	**DAMH-Q12-40**

1) For one foot mounting
2) Suitable for ATEX

Accessories

Flange mounting DAMF
Material:
Galvanised steel
RoHS-compliant

Mounting variants in combination with supply ports:
- For sizes 12 ... 25, possible every 60°
- For sizes 32/40, possible every 90°

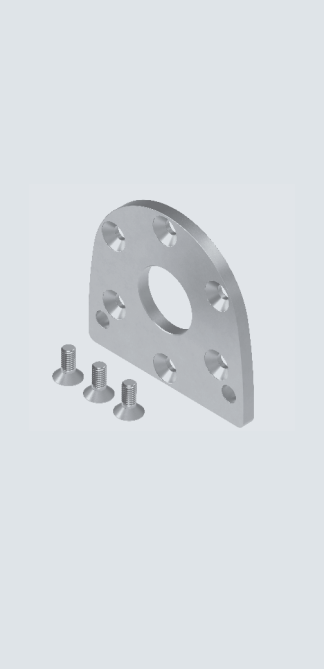

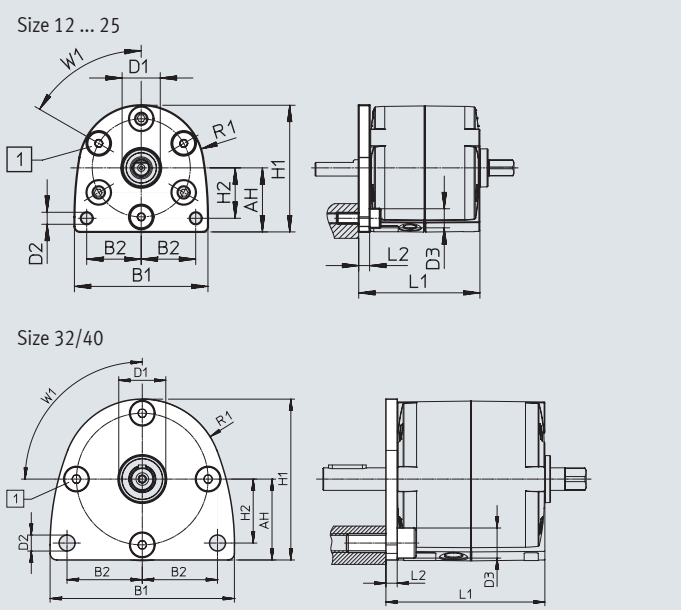

[1] Supply ports

Dimensions and ordering data

For size	AH	B1	B2	D1 ⌀ H10	D2 ⌀ H13	D3 ⌀ Max.	H1	H2
12	23.5±0.2	49±0.4	20	14	4.4	8.5	46.5+0.4/−0.3	18.5
16	28±0.2	59±0.4	23	16	5.4	8.5	56±0.4	20.5
25	34.5±0.2	74±0.4	30	25	6.5	10	69±0.4	23
32	43±0.2	98±0.5	40	25	8.5	16	85.5+0.5/−0.4	34
40	53+0.3/−0.2	120±0.5	50	30	8.5	18	106+0.5/−0.3	40

For size	L1	L2	R1	W1	Weight [g]	Part no.	Type[1)]
12	44.5	4	23	60°	54	**4965018**	**DAMF-Q12-12**
16	58	4	28	60°	80	**4965019**	**DAMF-Q12-16**
25	66	5	34.5	60°	147	**4965020**	**DAMF-Q12-25**
32	84.5	6	42.5	90°	305	**4965021**	**DAMF-Q12-32**
40	99	6	53	90°	472	**4965022**	**DAMF-Q12-40**

1) Suitable for ATEX

Accessories

Push-on flange FWSR/DARF
Material:
Flange: Anodised wrought aluminium alloy
Screws: Galvanised steel
RoHS-compliant

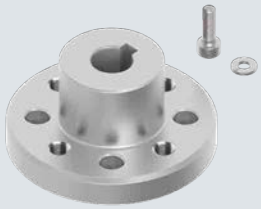

Size 6/8

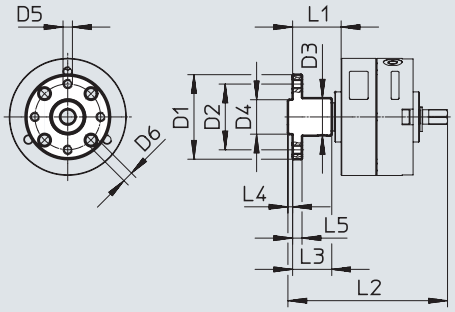

Size 12/16

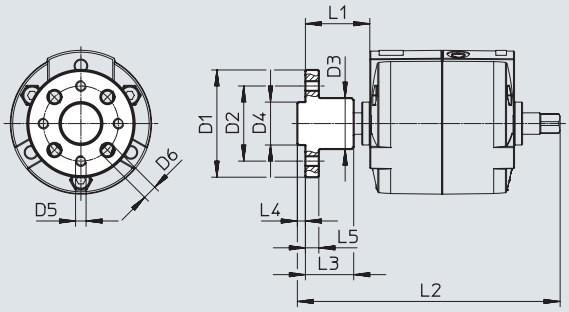

Size 25 ... 40

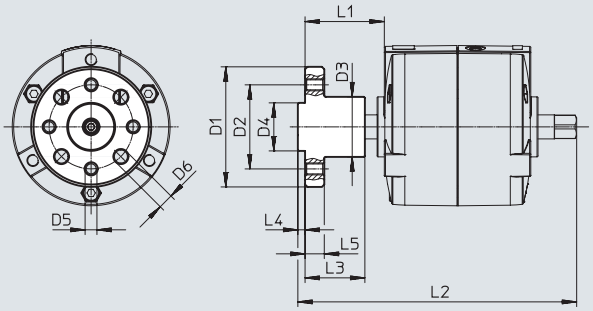

Dimensions and ordering data

For size	D1 Ø	D2 Ø	D3 Ø +0.4	D4 Ø	D5	D6 Ø H13	L1
6	23	16	10	8_{g7}	M3	3.4	13.5±0.7
8	27	21	12	11_{g7}	M3	3.4	15.5±0.7
12	$35_{-0.5}$	25	16	14_{f8}	M3	3.4	21+0.5/–0.7
16	$40_{-0.5}$	28	19	16_{f8}	M4	4.5	23+0.5/–0.8
25	$50_{-0.5}$	35	25	20_{f8}	M5	5.5	33+0.4/–0.5
32	$60_{-0.5}$	45	25	28_{f8}	M6	6.5	42.6+0.4/–0.7
40	$70_{-0.5}$	54	30	36_{f8}	M8	9	57.1+0.4/–0.7

For size	L2	L3	L4	L5	Weight [g]	Part no.	Type[1)]
6	45	10.5	$1.5_{-0.2}$	3	6	**185948**	**FWSR-6**
8	51	12.5	$1.5_{-0.2}$	3	8	**185949**	**FWSR-8**
12	77	16	$3_{-0.1}$	3	15	**4886221**	**DARF-Q12-12**
16	97	18	$3_{-0.1}$	5	25	**4886222**	**DARF-Q12-16**
25	116.1	24.9	$3_{-0.1}$	8	60	**4886223**	**DARF-Q12-25**
32	147.1	26.1	$4_{-0.1}$	10	92	**4886224**	**DARF-Q12-32**
40	178.6	44.6	$5_{-0.1}$	11	155	**4886225**	**DARF-Q12-40**

1) Suitable for ATEX

Accessories

Stop kit KSM
Material:
Housing: Anodised aluminium
Stops: High-alloy stainless steel
Free of copper and PTFE

Description:
For adjusting the swivel angle

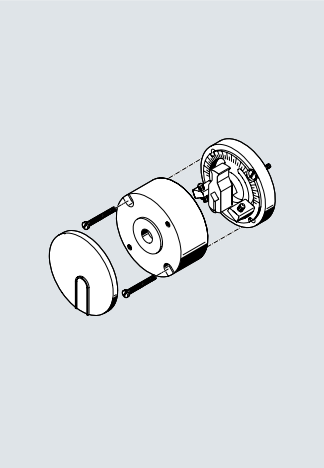

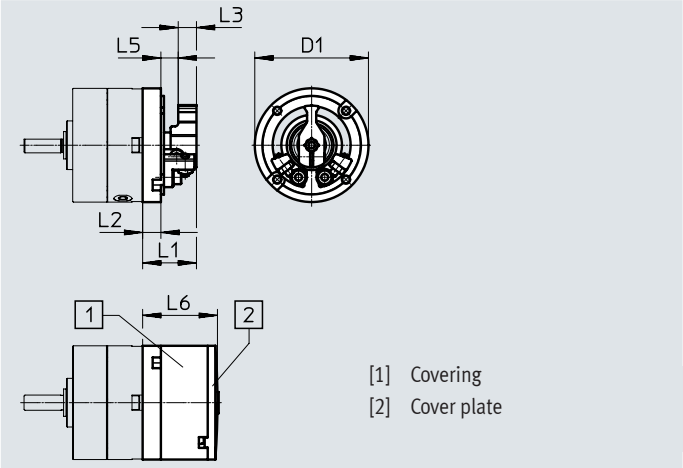

Dimensions and ordering data

For size	D1 Ø ±0.2	L1 +0.4	L2 +0.3	L3	L5	L6 +0.2/−0.6
6	29.4	11.2	3.2	5	2.5	17.8
8	37.4	17	6	6	5.7	24.9

For size	Swivel angle [°]	Precision adjustment [°]	Weight [g]	Part no.	Type[1)]
6	0 ... 180	−5 ... +1	30	**175833**	**KSM-6**
8	0 ... 180	−5 ... +1	70	**175834**	**KSM-8**

1) Suitable for ATEX

Mounting kit WSM
Material:
Bracket, magnet holder: Polyamide
Rail in bracket: Aluminium

Description:
- For sensing the swivel angle
- For mounting the proximity switches SME/SMT-10

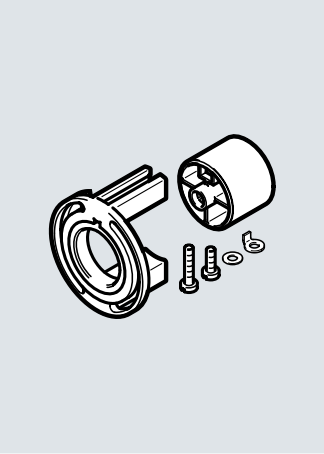

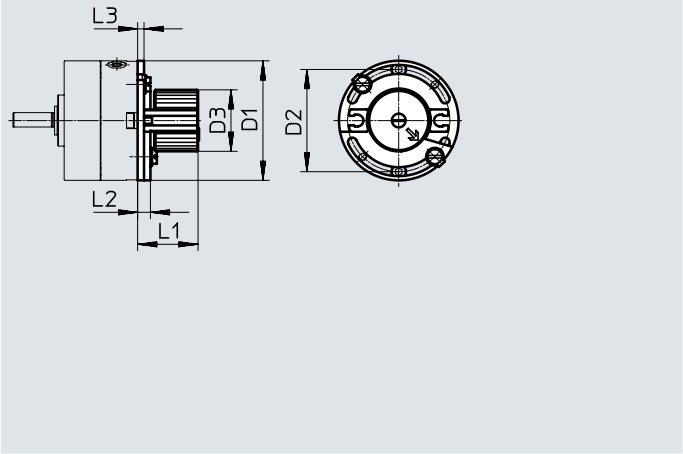

Dimensions and ordering data

For size	D1 Ø ±0.2	D2 Ø ±0.2	D3 Ø	L1 ±1	L2	L3	Part no.	Type
6	29.4	25	17.3	19.5	4	2	**173205**	**WSM-6-SME-10**
8	37.4	32	19.3	19.5	4	2	**173206**	**WSM-8-SME-10**

Ordering data – Adapter kit

	For size	Description	Part no.	Type
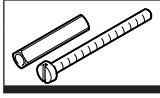	6	For attaching mounting kit WSM to stop kit KSM	**3617044**	**DADP-AK-Q1-6**
	8		**3617045**	**DADP-AK-Q1-8**

Accessories

Position sensor SRBS
Material:
Housing: Reinforced PA, nickel-plated brass
RoHS-compliant

Description:
- Sturdy, non-contacting and encapsulated position detection with long service life
- For sensing the end positions
- Simple and reliable operation using one button
- Only one connecting cable required
  ➔ page 23

For size 6/8

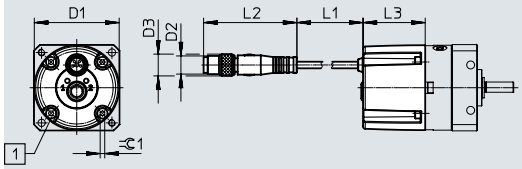

For size 12 ... 25

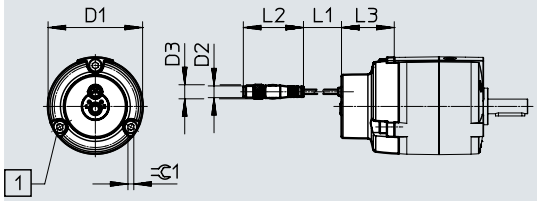

For size 32/40

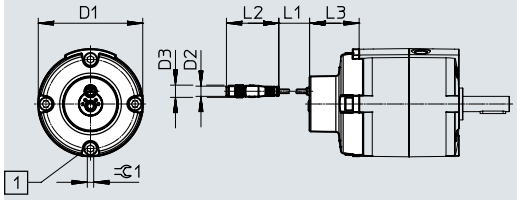

[1] Retaining screw

Dimensions and ordering data

Data sheets ➔ Internet: srbs

For size	D1 ⌀	D2	D3 ⌀	L1	L2	L3	1
6	29.4	M8x1, (Plug, 4-pin)	9.6	300	41.1	25.4	1.5
8	32					27.4	2
12	44.6					29.4	3
16	51.6					33.9	4
25	64.5					36	4
32	81.3					38.9	5
40	98.3					40.4	6

For size	Sensing range [°]	Repetition accuracy [°]	Number of switching outputs	Switching output	Switching element	Weight [g]	Part no.	Type
6	0 ... 270	≤ 1	2	PNP/NPN	N/O contact / N/C contact	25	★ 2619969	SRBS-Q12-6-E270-EP-1-S-M8
8						30	★ 2619972	SRBS-Q12-8-E270-EP-1-S-M8
12						42	★ 2393546	SRBS-Q12-12-E270-EP-1-S-M8
16						55	★ 2393547	SRBS-Q12-16-E270-EP-1-S-M8
25						60	★ 2393548	SRBS-Q12-25-E270-EP-1-S-M8
32						81	★ 2393549	SRBS-Q12-32-E270-EP-1-S-M8
40						120	★ 2393550	SRBS-Q12-40-E270-EP-1-S-M8

Accessories

Stop kit DADP-ES
Material:
Disc: Anodised aluminium
Lever: Nickel-plated beryllium bronze
Stop: DADP-12: Nickel-plated beryllium bronze
DADP-16 ... 40: Stainless steel
RoHS-compliant

Description:
- For adjusting the swivel angle (precision adjustment via thread)
- With flexible cushioning elements for noise reduction

Note
Permissible mass moment of inertia
➔ Basic drive

For size 12

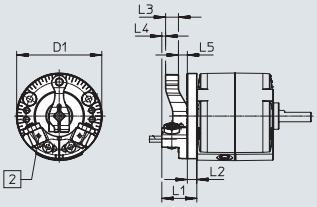

For size 16/25

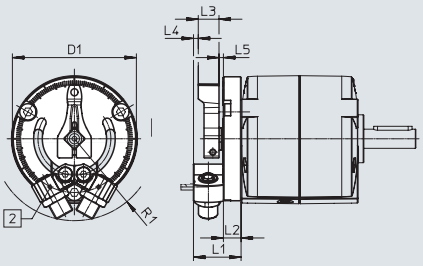

For size 32/40

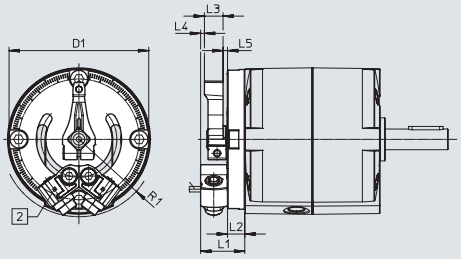

[2] Mounting thread for sensor bracket

Optimal swivel motion:

For an even swivel motion it is recommended to position the stops symmetrically to the mid-position.

Size 12

0 ... 190°

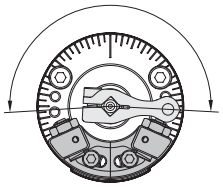

Size 16 ... 40
Mounting variant 90 ... 270°

Min. 90°

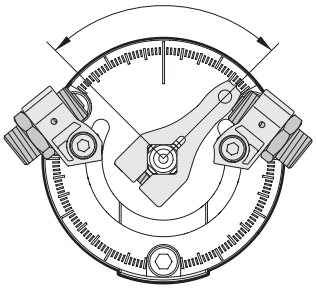

Max. 270°

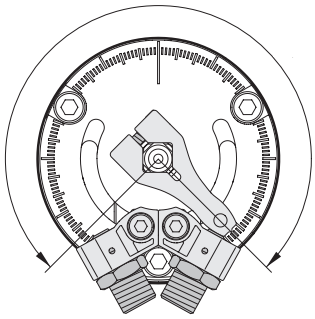

Mounting variant 0 ... 130°

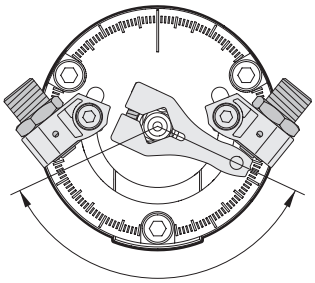

Accessories

Dimensions and ordering data

For size	D1 Ø	L1	L2	L3	L4	L5	R1
12	45	18.5	5	6.8	2	4.7	–
16	51.7	21.5	9	8.5	2.3	1.7	34
25	64.6	24.8	9.2	10.8	2.5	2.3	43.5
32	81	25.6	10	10.8	2.2	2.6	45.5
40	100	32	12	13.7	3.3	3	58

For size	Swivel angle [°]	Precision adjustment [°]	Weight [g]	Part no.	Type[1)]
12	0 ... 190	–6	60	**2536502**	**DADP-ES-Q12-12**
16	0 ... 270	–6	110	**2536503**	**DADP-ES-Q12-16**
25	0 ... 270	–6	180	**2536504**	**DADP-ES-Q12-25**
32	0 ... 270	–6	250	**2536505**	**DADP-ES-Q12-32**
40	0 ... 270	–6	450	**2536506**	**DADP-ES-Q12-40**

1) Suitable for ATEX

Minimum swivel angle W1 in combination with stop kit DADP-ES and attached proximity switches

With proximity switch SME-10/SMT-10

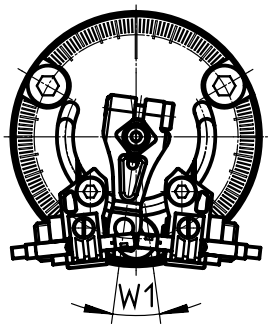

With proximity switch SIEN-M5/SIEN-M8

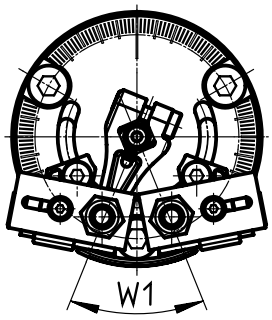

Stop kit	Proximity switch SME-10/SMT-10	SIEN-M5/SIEN-M8
DADP-ES-Q12-12	15°	60°
DADP-ES-Q12-16	15°	45°
DADP-ES-Q12-25	15°	20°
DADP-ES-Q12-32	15°	20°
DADP-ES-Q12-40	15°	15°

Accessories

Ordering data – Sensor brackets

	For size	Description	Part no.	Type	PU1)
	12 ... 40	• For sensing the swivel angle • For mounting the proximity switches SME/SMT-10	**550661**	**SL-DSM-B**	2
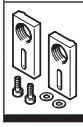	12 ... 40	• For sensing the swivel angle • For mounting the proximity switches SIEN-M5	**1130882**	**SL-DSM-S-M5-B**	2
		• For sensing the swivel angle • For mounting the proximity switches SIEN-M8	**1132360**	**SL-DSM-S-M8-B**	

1) Packaging unit

Proximity switch for size 6 ... 40

Ordering data – Proximity switches for C-slot, magneto-resistive

Data sheets → Internet: smt

	Type of mounting	Switching output	Electrical connection, outlet direction of connection	Cable length [m]	Part no.	Type
N/O contact						
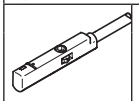	For size 6, 8: With mounting kit WSM-...-SME-10 For size 12 ... 40: Mounted on the DRVS using sensor bracket SL-DSM-B	PNP	Cable, 3-wire, in-line	2.5	★ **551373**	**SMT-10M-PS-24V-E-2,5-L-OE**
			Plug M8x1, 3-pin, in-line	0.3	★ **551375**	**SMT-10M-PS-24V-E-0,3-L-M8D**

Ordering data – Proximity switches for C-slot, magnetic reed

Data sheets → Internet: sme

	Type of mounting	Switching output	Electrical connection, outlet direction of connection	Cable length [m]	Part no.	Type
N/O contact						
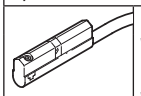	For size 6, 8: With mounting kit WSM-...-SME-10 For size 12 ... 40: With sensor bracket SL-DSM-B	Contacting	Cable, 3-wire, in-line	2.5	**173210**	**SME-10-KL-LED-24**
			Plug M8x1, 3-pin, in-line	0.3	**173212**	**SME-10-SL-LED-24**

Proximity switch for size 12 ... 40

Ordering data – Proximity switches for C-slot, magnetic reed

Data sheets → Internet: sme

	Type of mounting	Switching output	Electrical connection, outlet direction of connection	Cable length [m]	Part no.	Type
N/O contact						
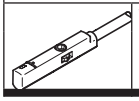	With sensor bracket SL-DSM-B	Contacting	Cable, 3-wire, in-line	2.5	★ **551365**	**SME-10M-DS-24V-E-2,5-L-OE**
			Plug M8x1, 3-pin, in-line	0.3	★ **551367**	**SME-10M-DS-24V-E-0,3-L-M8D**

Accessories

Inductive proximity sensors for size 12 ... 40

Ordering data – Proximity switches, inductive

Data sheets → Internet: sien

	Type of mounting	Thread	Contact	Connection	Part no.	Type
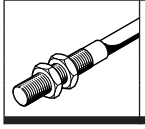	With sensor bracket SL-DSM-S	M5	N/O contact	Cable, 2.5 m	★ 150370	SIEN-M5B-PS-K-L
				Plug	★ 150371	SIEN-M5B-PS-S-L
		M8	N/O contact	Cable, 2.5 m	★ 150386	SIEN-M8B-PS-K-L
				Plug	★ 150387	SIEN-M8B-PS-S-L

Ordering data – Connecting cables

Data sheets → Internet: nebu

	Electrical connection, left	Electrical connection, right	Cable length [m]	Part no.	Type
	Straight socket, M8x1, 3-pin	Cable, open end, 3-wire	2.5	★ 541333	NEBU-M8G3-K-2.5-LE3
			5	★ 541334	NEBU-M8G3-K-5-LE3
	Angled socket, M8x1, 3-pin	Cable, open end, 3-wire	2.5	★ 541338	NEBU-M8W3-K-2.5-LE3
			5	★ 541341	NEBU-M8W3-K-5-LE3

Connecting cables for position sensor SRBS

Accessories – Connecting cables

Data sheets → Internet: nebu

	Electrical connection, left	Electrical connection, right	Cable length [m]	Part no.	Type
	Straight socket, M8x1, 4-pin	Cable, open end, 4-wire	2.5	541342	NEBU-M8G4-K-2.5-LE4
			5	541343	NEBU-M8G4-K-5-LE4
	Straight socket, M8x1, 4-pin	Straight plug M8x1, 4-pin	2.5	554035	NEBU-M8G4-K-2.5-M8G4

Ordering data – One-way flow control valves

Data sheets → Internet: grla

	For size	Connection Thread	For tubing O.D.	Shut-off element	Part no.	Type
For exhaust air						
	6, 8	M3	3	Metal version	175041	GRLA-M3-QS-3
	12, 16, 25	M5	3		★ 193137	GRLA-M5-QS-3-D
			4		★ 193138	GRLA-M5-QS-4-D
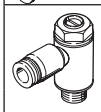	32, 40	G1/8	3		★ 193142	GRLA-1/8-QS-3-D
			4		★ 193143	GRLA-1/8-QS-4-D
			6		★ 193144	GRLA-1/8-QS-6-D
			8		★ 193145	GRLA-1/8-QS-8-D

Festo - Your Partner in Automation

1 Festo Inc.

5300 Explorer Drive
Mississauga, ON L4W 5G4
Canada

Festo Customer Interaction Center
Tel: 1 877 463 3786
Fax: 1 877 393 3786
Email: customer.service.ca@festo.com

2 Festo Pneumatic

Av. Ceylán 3,
Col. Tequesquináhuac
54020 Tlalnepantla,
Estado de México

Multinational Contact Center
01 800 337 8669

ventas.mexico@festo.com

3 Festo Corporation

1377 Motor Parkway
Suite 310
Islandia, NY 11749

4 Regional Service Center

7777 Columbia Road
Mason, OH 45040

Festo Customer Interaction Center
1 800 993 3786
1 800 963 3786
customer.service.us@festo.com

Connect with us

www.festo.com/socialmedia

www.festo.com

Subject to change