CONNECTING CITIES TO **SMART WATER**

TALIS

WHO WE ARE

TALIS is a leading global provider of premium valves, hydrants and other solutions for water flow control.

With a varied range of products, we offer comprehensive solutions for the entire water cycle, from hydrants to butterfly valves, from knife-gate valves to needle valves. Our experience, innovative technology, global expertise and individual consultation process, form the basis for developing sustainable solutions for the efficient handling of the vital resource "water".

With over nine strong brands and 28 entities in Germany, France, Spain, Portugal, Italy, Great Britain, the Netherlands, Russia, Poland, Israel, China, the Middle East, Mexico, India, South Africa and Singapore, TALIS is the largest supplier of valve technology and first choice when it comes to water valves and services for the whole water cycle.

« TALIS STRIVES TO SERVE YOU, OUR CUSTOMER, WITH SUPERIOR QUALITY AND SERVICE LEVELS.
Continuous innovation of our products and applications combined with technical support allows you to maintain your critical water infrastructure with confidence. »

Christoph Gusenleitner
Chief Executive Officer

29 000 DIFFERENT PRODUCTS IN CATALOGUE

Over 50 SALES PARTNERS

SALES IN **187** COUNTRIES

13 FACTORIES WORLDWIDE

19 000 CUSTOMERS

1 300 EMPLOYEES

1871
Foundation of ERHARD (D)
Water taps

1874
Foundation of SCHMIEDING (D)
Modern and market orientated solutions

1880
Foundation of BAYARD (FR)
Beer taps and water fountains

1945
Foundation of LUDWIG FRISCHHUT (D)
« in-house » foundry

1949
Foundation of RAPHAEL (ISR)
Control valves

Foundation of STRATE (D)
Product and problem-solving competence Sewage industry

1957
Foundation of BELGICAST (ES)
Valve manufacturer for the naval industry

1974
Foundation of ATLANTIC PLASTIC (UK)
Plastic fittings

1992
Foundation of UNIJOINT (NL)
Adapters and extensions, pipe couplings, flange adapters and dismantling joints

2001
Acquisition by Tyco Waterworks

2010
Acquisition by Triton and creation of TALIS

2011/13
Russia (2011)
China (2012)
Brazil (2013)
Middle East (2013)

2014
Launch of « Smart-Inside » solutions to make our products smarter
-
South Africa

2015/16
Mexico (2015)
Joint-Venture with Kc-Val (2016)
India (2016)
Singapore (2016)

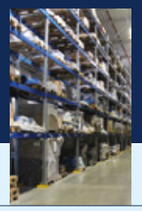

2017
New logistic centre in Germany

WATER CHALLENGES

THE WORLD'S POPULATION IS GROWING AT AN ENORMOUS RATE AND CITIES AROUND THE WORLD NEED TO ENSURE THEY CAN EXPAND SUSTAINABLY, OPERATE EFFICIENTLY AND MAINTAIN A HIGH QUALITY OF LIFE FOR RESIDENTS.

AS WATER IS SUCH A VITAL RESOURCE, IT'S IMPORTANT THAT A CITY'S WATER SYSTEM IS SUSTAINABLE TOO.

THIS IS WHERE 'SMART WATER' COMES IN, HELPING TO MAKE BEST USE OF WHAT IS (IN SOME AREAS) A SCARCE RESOURCE, AS WELL AS MAXIMIZING ENERGY EFFICIENCY.

Water utilities are under pressure from growing demand, water stress, increasing energy prices and aging water systems. They are keen to have modern SMART solutions to solve their traditional challenges.

SMART SOLUTIONS

Vision

- TALIS is one of the leading manufacturers of valves for water supply, sewage management and power generation. Our ambition is to become the first truly global leader in water flow control solutions
- As a leader of water network product suppliers we are keen to help our clients turn their existing pipes into a SMART Water Network.

Mission

- Creating Data from Water Flow
- Find room inside our traditional valves for SMART products
- Collaborate with our Customers, Suppliers and Partners to create SMART Water Networks

« Sharing ideas allows us, at TALIS, to be more creative and innovative to meet the requirements of our customers and anticipate their needs. As leaders, we believe we should set the goals for the water market and keep ourselves at the fore front of the technology, to ensure we give our customers the right solutions for their «SMART WATER NETWORKS ».

Assaf Bassi
SMART Solution manager
TALIS

150 YEARS
OF EXPERIENCE

DEEP UNDERSTANDING
OF WATER NETWORK

LONG EXPERIENCE
WITH **SMART** PRODUCTS

WORLDWIDE FOOTPRINT
AND SUPPORT

SUSTAINABILITY
AND **CREDIBILITY**

THOUSANDS OF
SATISFIED CUSTOMERS
AROUND THE WORLD

MAIN FOCUS ON
DELIVERY AND SUPPORT

MONECA SMART

BAYARD RANGE

- With more than 1600 units in operation, the MONECA combines TALIS's multiple expertise with smart cards, high-standard quality water dispensers and online management software. MONECA is a standalone hydrant, suitable for public places, with a low installation cost and autonomous power by long-life battery.
- Designed for water network protection and utility operators
- The MONECA secures the water network, as it is equipped with back flow preventer for pollution protection, pilot valve to avoid water hammer at closure and a speed-limiting device to avoid over speed in the network. MONECA is simple to use and is typically used by utilities and municipality services for street cleaning or tank filling operations. Smart cards control access to the MONECA and push-button water dispensing.

ADVANTAGES

DESIGN
Robust, ideal for public places.

CONTROL & SELL
Monitor water withdrawal and sell water that is effectively used.

SECURE
Protects the water network by dedicated hydrants.

REMOTE MANAGEMENT
With daily reading of withdrawal.

KEY FEATURES

DEDICATED HYDRANTS FOR PROFESSIONNALS

SECURE ACCESS & PREPAID SOLUTION BY CARDS

AUTOMATIC DATA SENT TO OWNER'S OFFICE

CHARACTERISTICS

- **Access control –** Via smart card.
- **Monetary management** by prepayment or at time of consumption.
- **Debit control –** Debit is increased gradually thanks to a button and limited to 40m³/h.
- **Closing speed flow control –** preventing water hammer.
- **Anti-pollution protection** of the network by non-return valve.
- **Monitoring water withdrawal** – Improve your knowledge of NRW.
- **Drain box –** Comes complete with special foot protection for increased quality of drainage.
- **Optional modems -** Can be equipped at the factory or retrofited on site with two types of modem, Sigfox radio LPWAN modem and GPRS/3G quad band modem.

EASY TO USE BY USER

INSERT SMART CARD

OPEN & PLUG PIPE ON MONECA

PRESS 1 BUTTON AND TRACK WATER CONSUMPTION

EASY TO MANAGE, BY OWNER, WITH MONETICARD WEB

The MONETICARD WEB software allows the management of the subscribers, card top-up, monitoring of draw volumes (print-out of the usage report) and the monitoring of the hydrants and their maintenance.

This software solution is hosted on our internet web-site www.smart-inside.com, available in 5 languages.

smart@talis-group.com

MONECA
BULK WATER DISPENSER IN THE STREET

INSTALLATION OF A MONECA NETWORK TO SUPPLY WATER TO PROFESSIONALS. IN THE STREET, THE PROFESSIONALS ACCESS WITH THEIR PREPAID CARD TO THE WATER, WHICH IS METERED FOR EACH DRAW. MONECA WATER CONSUMPTION IS AUTOMATICALLY REPORTED BY GSM COMMUNICATION.

WHERE : **SPAIN**

CUSTOMER : **PAMPLONA WATER AUTHORITY**

THE PROBLEM :
Professionals require water in large quantity for various applications (gardening, street cleaning, buildings works etc.). They often use the fire hydrant network to draw the water, which is forbidden, as the water is not paid for and this harms the water network.

THE KEY REQUIREMENTS WILL BE:

- Barcelona outlet adapted to Spanish market.
- Non-return valve to avoid risk of pollution.
- Water authority to provide prepaid card to professionals and their own staff. Water used by own staff to be tracked and counted as Non-Revenue Water.
- Professionals can order additional water and have their cards updated remotely via the network.
- Day to day analysis of water consumption to monitor the trends and identify where water consumption is high, to provide additional MONECAS.

ON-SITE INSTALLATION

This MONECA is placed on a drainage pavement in the facilities. A dedicated parking space is set for the MONECA so that the truck can operate easily. GSM communication is set with SIM card so that information is gathered by the website www.smart-inside.com. In the offices, The software Moneticard WEB is installed with its card reader to manage the subcribers, the smart cards and the water consumption history (by card or by MONECA)

MONECA
FOR TANKER FILLING IN WATER WORKS

INSTALLATION OF A MONECA IN A TANK FILLING STATION IN GURGAON (NEAR NEW DELHI).
INDIA SUFFERS FROM WATER SCARCITY DUE TO LACK OF RESOURCES, BUT ALSO OBSOLESCENCE OF WATER NETWORKS. THE CONSEQUENCE IS THAT IT IS CURRENTLY IMPOSSIBLE IN INDIAN CITIES TO FULLY DELIVER WATER THROUGH THE NETWORK. WATER IS DISTRIBUTED VIA TANKERS TO SUPPLY WATER TO CONSUMERS. THESE WATER TANKERS ARE FILLED IN DEDICATED TANK FILLING STATIONS.

WHERE : **INDIA**

CUSTOMER : **GMDA**

PROBLEMATIC :
The traditional operations are performed by cash payment for each refill, generating lots of transactions to be monitored. Water supply is managed by simple cut-off valves which generate pressure variations that rapidly damage the water network. The water provided is not counted physically and thus no control is provided on the resource or yield.

THE KEY REQUIREMENTS WILL BE:

- **CONTROL & CASHLESS SALE WITH SMART CARDS** GMDA to provide prepaid cards to all truck drivers. Future plan to link cards with payment via GMDA website.
- **FLOW RATE** - Flow rate is adaptable up to 80 m^3/hour for filling tanker of 15m^3.
- **POWER SUPPLY :** The MONECA is used 50 times a day and autonomous battery is replaced by low voltage supply (12 VDC), provided by the water works.
- **PRESET VOLUME** - Programming the user card with a preset volume of water, depending on the truck. The user has only to start drawing and it stops automatically.

Local authorities observing the performance of MONECA

ON-SITE INSTALLATION

MONECA is erected and configured with the MONECA App. GSM communication is established for complete control of water consumption and usage.
In this installation, the MONECA triggers a pump when a card is inserted. This facilitates the drawing of water from an underground reservoir.

smart@talis-group.com

SENTINEL

BAYARD RANGE

- SENTINEL is the newest and most efficient automated fixed network leak detection solution on the market.
- Combines a patented piezo electric sensor with the most advanced data processing, in order to pinpoint precisely the water leaks every day. Thus, the network manager can check at a glance on the secured Sentinel Web site, the new Points Of Interest (POI) detected by both the correlation and the prelocation algorithms.
- Never before has the leak detection process been pushed to such a high degree of automation and efficiency, leading to the detection of very quiet leaks (called "historical leaks") whilst avoiding false positives.
- SENTINEL is installed as a retrofit kit on all Bayard fire hydrants from 1971. It is fully integrated on the top of the fire hydrants to avoid vandalism. The way the sensor is mechanically fixed on the hydrant guarantees a perfect sound acquisition for all product lifetime and the position of the complete SENTINEL module on top of the pillars leads to the most efficient transmission solution on the market combined with the lowest operational costs.

ADVANTAGES

LONG-TERM EFFICIENCY

Fast leak detection and associated confidence ratings.

PRECISE

Patented sensor and signal processing algorithms allowing accuracy up to one meter per 100 meters of pipe.

OPTIMIZED

Every system deployed is predetermined with precise data imported from customer GIS.

ECONOMICAL

Easy to install, manage and maintain, without any underground work or data transmission network to deploy.

USER FRIENDLY FOR QUICK ANALYSIS

Every day, in few minutes, the owner of the system has a complete overview of POIs detected whatever the quantity of nodes deployed.

KEY FEATURES

- Retrofit possible on Bayard fire pillar hydrants from 1971 (DN80/100) and very easy to install
- **Perfect contact to the network thanks to its mechanical fixing** on the top of the fire hydrant.
- **Full security installation process** is carried out by installers of the water service: no need to clean underground valve stems and to secure the position when on the road since fire hydrant pillars are always on the edge of the road.

- **Fully automated solution:** no need to program the modules, nor ask for correlation between node pairs. **All possible correlations are carried out automatically,** daily on the cloud and POIs detected displayed on the integrated map.
- **SENTINEL is modular and easy to maintain** by the owner (battery pack replacement) thanks to its different independent parts, fully potted and connected via IP 67 connectors.
- **Accurate** to the highest attainable standards, depending on accuracy of GIS data from the customer. The SENTINEL solution proceeds to every possible correlation calculation, but also gives prelocation data for extremities of the network, if no hydrant exists.

MAJOR BENEFITS FOR THE OWNER AND RETURN ON INVESTMENT

The ease of installation of the SENTINEL module as well as its modularity, the fact it doesn't need to be programmed by the installer, the strong fixing on the network to guarantee the highest sensitivity for its lifetime and the fully automated data processing to deliver ready to use synthesis every day, bring to the market the most technically and economically viable solution to survey leaks as soon as they appear on the network helping the owner to reduce at its minimum the none revenue water.

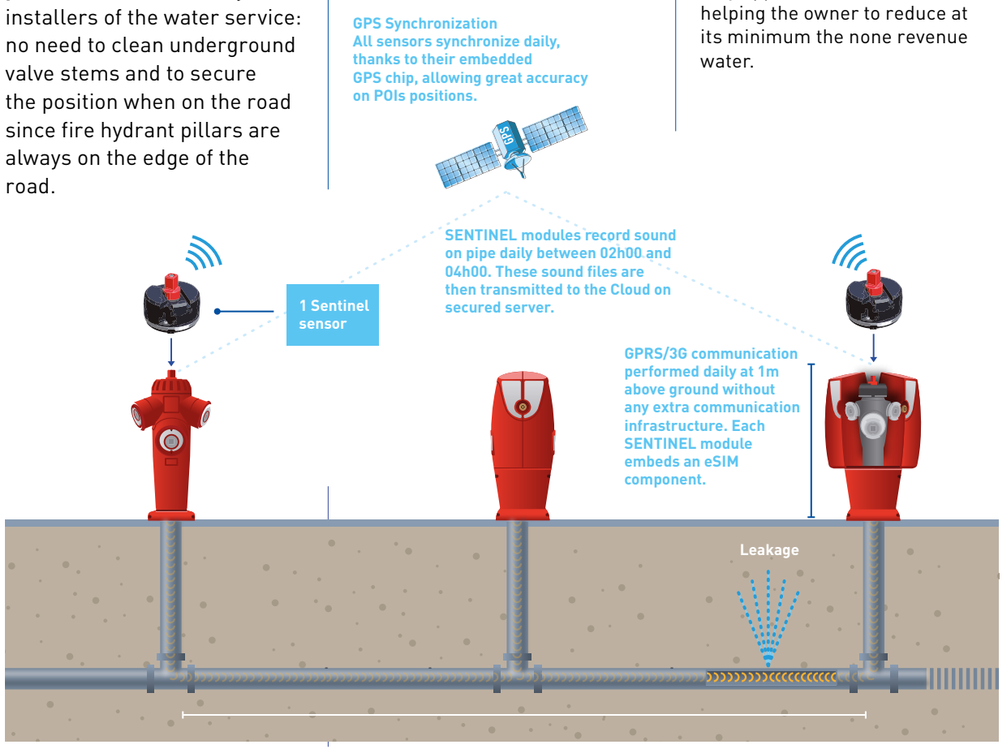

smart@talis-group.com

SENTINEL
REAL WORLD APPLICATION

IDENTIFYING A LEAK AT ITS INCEPTION CAN AVOID COSTLY AND CATASTROPHIC PIPE FAILURE

WHERE: **USA**

CUSTOMER: **AMERICAN WATER**

PROBLEMATIC: EchoShore®-DX Solution deployment, Echologics Northern American equivalent from SENTINEL, on a very old network.

Network with fire hydrants equipped with EchoShore®-DX modules.

An installation of the EchoShore®-DX leak detection platform finds and monitors a growing leak that conventional technologies can not. Working with American Water, Echologics installed EchoShore-DX nodes in a community with aging pipeline infrastructure challenges.

EchoShore-DX platform detected this leak several weeks earlier than by using conventional equipment.

Identifying and locating a leak in the earliest stages of its formation quickly proved the value proposition of the EchoShore-DX platform. The initial leak was so small that it could not be located from above ground by field crews. The leak was closely monitored and observed over a four-week period as it grew in size.

Conventional leak detection technologies made finding this leak extraordinarily difficult.

A water pocket that formed underneath the pipe effectively masked the sound of the leak. Furthermore, the water was steadily draining in to a river about a quarter mile away, eliminating visible surface clues of the leak. Slag residue from earlier iron ore smelting operations created a dense insulating layer around the pipe. This likely prevented ground-sounding microphones and conventional correlator leak detectors from hearing the ultra-faint leak noises. That is until now.

As the identified leak location was excavated, it revealed that the aged cast iron pipe had a crack on the bottom of its bell joint. Remedial action was then taken.

Operators can visually confirm leak.

LES ABRETS, FRANCE
THE NETWORK OPERATOR TESTIFIES

THE WATER SYNDICATE OF LES ABRETS AND SURROUNDING AREA (FRANCE), CHAIRED BY MR. RENÉ XAVIER FAIVRE-PIERRET, WANTED TO TEST THIS UNIQUE SOLUTION ON THE MARKET

WHERE: **FRANCE**

CUSTOMER: **WATER SYNDICATE OF LES ABRETS AND SURROUNDING AREA**

PROBLEMATIC: Sentinel module deployment in center village

An area of the town of Les Abrets was equipped with sentinel sensors on pillar fire hydrants (up to 400 m distance between sensors on cast iron). After a few days, several points of interest were identified and a leak has been repaired recently on hdpe from a particular branch allowing to save approximately 17,500 m³ per year.
The team in charge of network performance of syndicate des abrets makes a first point on the sentinel solution.

Mr Jean-Martial FILHON, Director of the Technical Service of the Water Syndicate of Les Abrets, stated: "When the BAYARD company offered us the chance to try its brand new Sentinel solution, we seized the opportunity to optimize the search for leaks on the Syndicate."

"A very well-informed GIS (nature of pipelines, distances, pillar fire hydrants positions, ...) is essential for the good operation and accuracy of the system. Mrs. Emilie CHAISSAN, responsible for GIS and the performance of network, adds: «This new SENTINEL Fixed Leak Detection Program will also provide further information to improve GIS data regarding leaks suffered by our network. Thanks to building up a history of the precise position of building up a history of the precise position of leaks, as well as the recurrences found, we will optimize the pipeline renewal program."

Mr Régis PERROUD, Manager of the Works Department, states: "Grenelle II of the Environment imposes regulations for the improvement of network performance. Preserving the water resources involves fighting against the main cause of the losses, that is leaks in the distribution network. To do this, we need a powerful tool, combining sectorization flow meters with acoustic detection. The Sentinel system from BAYARD currently allows continuous monitoring of the network thanks to its connected sensors. Sentinel is the optimal solution which, coupled with the sectorization of the network, allows continuous monitoring of the appearance and evolution of leaks to repair as quickly as possible, the reactivity being the essential condition to improve network performance."

The Operations Manager, Mr. Olivier NOCENTI adds: "Because it is deployed at fixed posts, the Sentinel system not only allows the detection and precise location of leaks as soon as they appear, but also allows the detection of anomalies in the network like leaky or insufficiently open valves and disrupt ions to day-to-day operations. Furthermore, integration on top of fire pillars allows simple and fast deployment for maximum efficiency. Sentinel is today the continuous monitoring system of our network!"

With the kind permission of the Water Syndicate of Les Abrets and surroundings.

smart@talis-group.com

ULTRAF SMART

RAPHAEL RANGE

The ULTRAF combines the highest level of pressure and flow control valve with an accurate and reliable Ultrasonic water meter in one compact design. ULTRAF PRO combines state of the art technologies from different fields, such as advanced hydraulics, accurate sensing and modern communications.
The ULTRAF is a unique product, based on the "RAF" control valve combined with the newest technology of battery operated, ultrasonic water meters. It enables flow monitoring and pressure regulation in a small footprint, saving significant space in manholes and valve boxes. Ultraf's flexibility makes it relevant to different markets and applications such as: agriculture & turf, municipal & turf, municipal market for pressure control and flow monitoring, municipal market for leakage control and other.

ADVANTAGES

INNOVATIVE

Only product combine ultrasonic water meter and control valve.

ECONOMIC

Reduce infrastructure cost by 50%.

RESISTANCE

IP 68 for below-water conditions.

SIMPLE

Connect and forget with simple Bluetooth App.

KEY FEATURES

COMPATIBLE WITH WATER WORKS AND AGRICULTURE
IN-BUILD IRRIGATION CONTROLLER

Bluetooth 4.0 Low Energy

INBUILT BLUETOOTH COMMUNICATION, NO WIRES NEEDED DURING PROGRAMING

MARKETS

Irrigation
Water transmission
Water distribution network
Dams and hydro power
Fire protection network
Industrial water applications

TECHNICAL DATA

Fluid: drinking water, or filtered water

Nominal Diameter (DN): 50mm-200mm (2" to 8")

Nominal Pressure (PN):

Nominal: 10 – 16

Working: 16 bar

Medium Temperature: up to 70° C

Pipe connection: flanges

Material: SST (stainless steel) and cast iron

CHARACTERISTICS

- **Flow measuring unit and hydraulic valve combined.**
- **No moving parts**, high accuracy throughout all product life time.
- **Very accurate Ultrasonic measuring unit** in wider flow rates than conventional meters. Accuracy according to ISO 04064 (2005) R125 or higher on request.
- **No straight pipe upstream & downstream needed.**
- **Neglected regulation effect** to measuring unit accuracy.
- **Battery** powered, 10 years no maintenance measuring unit. Battery in a separate compartment with tamper seal protection. Field replaceable by authorized dealer.
- **Separate volume pulls output**, protecting main processor from accidental high voltage damage. 2 x 9 VDC batteries for operation in a separate compartment, field replaceable by owner.
- **Extension cards** for 4-20 mA continuous volume output; independent pressure management, flow based, pressure reducing valve or volumetric irrigation controller.
- **Blue Tooth® communication** with RAPHAEL controller smartphone App. for measuring units preference selection and controller settings.
- **All metal, water resistant unit** according to IP68.
- **Available in sizes 50mm to 200mm.**

AVAILABLE CONFIGURATION

- **Basic**
- **Pulse output**
- **Analogue output**
- **Pressure management**
- **Irrigation controlling**

PRODUCT MAIN ADVANTAGES

- All in one product (integrated water meter and control valve)
- IP 68 (perfect for submerged conditions)
- Ideal for modern irrigation with the irrigation control card
- Vertical and horizontal installation
- Perfect for increased revenues and reduced leak detections
- Reduce NRW % (non-revenue water) as DMA meter
- Rugged Digital display
- No moving parts, providing high accuracy for long time
- Low maintenance required
- Long life (up to 10 years)
- Competitive price compared to the current market solutions.

smart@talis-group.com

ULTRAF
ADVANCED TECHNOLOGY FOR SMART AGRICULTURE

20 UNITS OF ULTRAF ULTRASONIC HYDROMETERS WERE INSTALLED IN THE COOPERATIVE VILLAGES NAMED "MOLEDET " (NORTHERN PART OF ISRAEL) DURING THE LAST 8 MONTHS. THE GENERAL IDEA OF THIS PROJECT IS TO PROVIDE ACCURATE WATER MEASUREMENT AND FLOW REGULATION IN ONE COMPACT PRODUCT.

WHERE : **ISRAEL**

CUSTOMER : **MOLEDET COOPERATIVE VILLAGE**

THE PRODUCT IS BEEN USED IN TWO DIFFERENT CONFIGURATIONS

- Agricultural fields – measuring the amount of water supplied to the field and control ling the income pressure in parallel.
- Center Pivot– crop irrigation in which equipment rotates around a pivot and crops are watered with sprinklers.

In the Pivot installations, the ULTRAF replaces both the water meter and control valve, to bring the following advantages:

- Accurate irrigation-due to the Ultrasonic measurement principle (compared to a traditional mechanical WATER METER)
- Controlling the pressure from the network to protect and sustain the irrigation process
- Quick and easy installation: no need for D (Straight pipe) before and after the products
- Low maintenance cost

So far, in this specific village, we have installed 20 units of various sizes (80mm-200mm) and managed to reduce the NRW percentage from 17% to 4%, in less than 4 months and with high satisfaction for the customer.

For the Agriculture fields, installation of the Ultraf has brought the added value of:

- One small and accurate product
- Large and simple display for on-field monitoring
- Reduction of infrastructure costs
- Compatibility with external communication devices (Cellular &RF)

Ultraf Ultrasonic Hydrometer installed on the Pivot

At the main inlet of the fields, Ultraf replaces the water meter and the control valve, providing accurate water measurement and flow control

Pivot during irrigation using Ultraf

APOLLO SMART

RAPHAEL RANGE

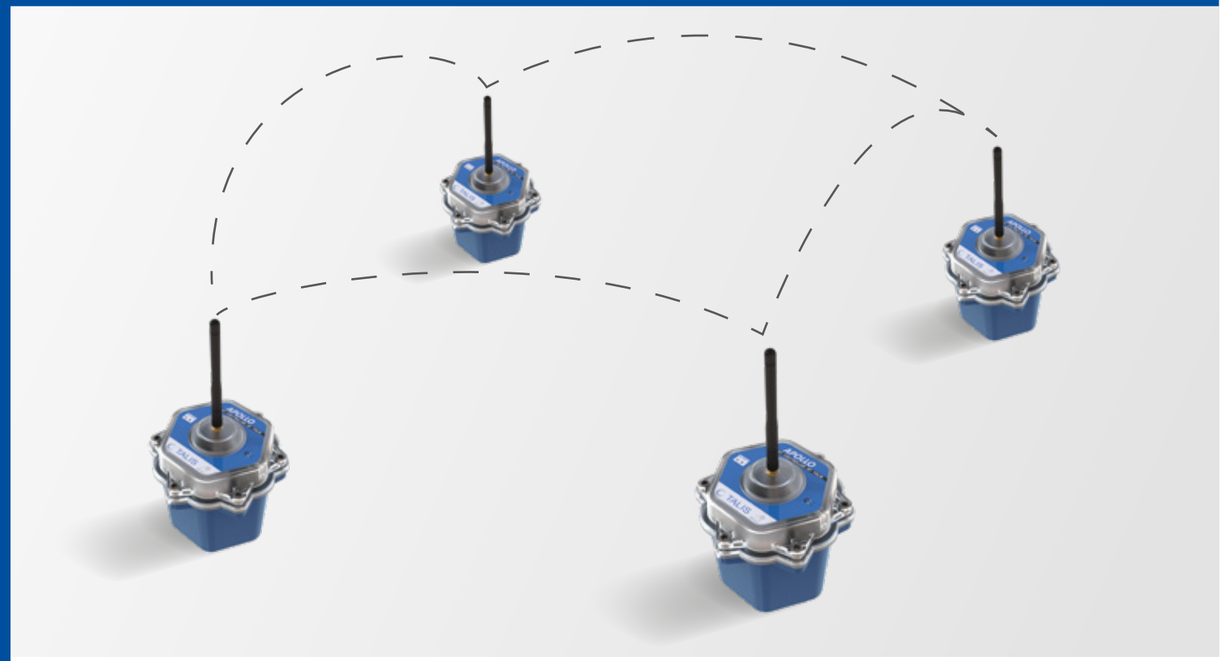

Innovative and simple to install, The APOLLO is a highly advanced GPRS low power data logger, designed to monitor and control water network flow meters, fire hydrants, pressure, water hammer and open\close valves from remote locations. Equiped with four digital inputs , two analogue inputs and two high quality and super sensitive integrated pressure sensors, the APOLLO is ideal for pressure management, DMA and NRW reductions.

MARKETS

- Water distribution network
- Sewage network and treatment
- Irrigation
- Water transmission
- Dams and hydro power
- Desalination
- Fire protection network
- Industrial water applications
- Industrial water applications
- Water treatment

ADVANTAGES

INDEPENDENT
Up to 10 years life time.

BI-DIRECTIONAL
Two way communication protocol.

ADVANCE
Supporting the new cellular and IoT networks.

LIGHT
Weight only 870 g.

MAIN FEATURES

- Ultra-low power consumption (up to 10 years lifetime with one battery pack).
- Quick installation (include battery replacement).
- Friendly and intuitive WEB interface for data monitoring
- Light weight : 870 g
- Modbus compatible.
- 4 digital inputs and 2 analogue inputs.
- 2 inbuilt pressure sensors (no need for external device).
- IP68 - tested under 2 meters of water for 100 days
- Water hammer detection algorithm - unique system to detect live water hammer up to 100 records per second.
- Third party integration ability with other software.
- Remote command OPEN\CLOSE valves.
- Extended internal memory (up to 40,000 values).

KEY FEATURES

PERFECT FOR WATER PRESSURE MONITORING AND WATER HAMMERS DETECTION

SUPPORTING MODBUS COMMUNICATION PROTOCOL

APOLLO MAIN APPLICATIONS

- **Potable water network –** for water meter monitoring , flow meter monitoring
- **Waste water network –** for electromagnetic monitoring
- **Irrigation –** for monitoring ,for remote control (open/close applications), tank level indications
- **Water Utilities –** reduce NRW, bulk meter monitoring , pressure indications,
- **Water works –** leak group management, monitoring

ZEUS WEB INTERFACE

The Zeus WEB interface allows the user to interact with any APOLLO cellular data logger installed in the field from any place. With its strong and fast web browser, the ZEUS offers many tools to control and monitor different devices in different locations.

MAIN FEATURES

- User friendly and intuitive web interface
- Remote configuration interface
- GIS monitoring system
- SSL secured website
- Android and IOS monitoring applications
- Supporting OPC, API for SCADA systems integrations
- Graphs and reports modules

Opening screen in the Zeus, showing locations of all the units with general status

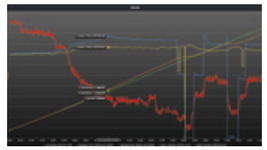

Combines different parameters into a customizable graphing system as needed

Also to the customer to generate different types for reports in different resolutions and parameters

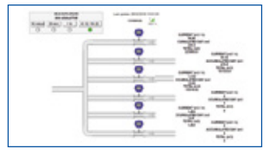

Presenting the information from the graph and reports in a visual system for better monitoring and controlling

smart@talis-group.com

APOLLO
FOR REMOTE MONITORING AND CONTROL IN WATER DISTRIBUTION

IN JANUARY 2018, TALIS AND ISRAEL'S NATIONAL WATER COMPANY, MEKOROT, SUCCESSFULLY COLLABORATED FOR THE FIRST TIME. THE SOLUTION ALLOWS THE END USER TO MONITOR AND CONTROL THE MAIN WATER INLET CONNECTION OF THE VILLAGE.

WHERE : **ISRAEL**

CUSTOMER : **MEKOROT ISRAELI NATIONAL WATER CO.**

GENERAL FIGURES:

- Mekorot provides about 80% of the drinking water in Israel and 70% of the annual water consumption in Israel
- Mekorot's annual water supply is about 1,500 billion cubic meters of water
- Mekorot provides water to 4,800 local authorities, water corporations, farmers, kibbutzim, Villages and industrial plants.

PROJECT KEY REQUIREMENT:

The purpose of the project is to enable the sources to:

- continuously and remotely monitor the main water supply of the Village of Tlalim in the south of Israel
- Allow the customer to receive the following data continuously: flow rate, cumulative reading of the water meter, pressure up and down and the possibility of regulating the water pressure at the entrance to the settlement.
- Allow the customer to receive different types of alert such as: low pressure, high pressure, overflow and more.
- Open the door for other projects with Mekorot

On Line information is received through the web base interface named ZEUS WEB and a mobile App, allowing the customer to see the information remotely.

Apollo smart Data logger along with the Ultraf Ultrasonic Hydrometer on the main water line inlet of Tlalim Village

smart@talis-group.com

COPERNIC

BAYARD RANGE

Detect stolen water and track usage of your fire hydrant

COPERNIC is an add-on module installed on fire hydrant that tracks the use of the fire hydrant in real time. Using Sigfox wireless communication, the operator gets an instant alert by email or sms in the event of the fire hydrant being opened and the module tracks suspicious water drawing. Working 24/7, the operator gets an overall estimate of water consumption from the fire hydrant network to improve the network efficiency.

MARKETS

Fire protection network

TECHNICAL DATA

Storage temperature: -30°C to + 85°C

Use temperature: -25°C to + 70°C

Waterproof: Shock resistance: IK9

Maximum pressure: 16 bar

Flow: operating conditions up to 200 m3/h

ADVANTAGES

STOP FRAUD

Knowledge of how your hydrants are being used 24/7.

REAL TIME

Alerts in real time on your smartphone.

NRW

Volume estimation to improve network efficiency and reduce Non Revenue Water.

CHARACTERISTICS

Compatibility – COPERNIC is compatible with all BAYARD fire hydrants ND 80/100 (EMERAUDE, SAPHIR, RETRO) since 1971.

Radio communication – COPERNIC uses the SIGFOX radio network, that works without any specific infrastructure, to relay messages: COPERNIC can be used immediately after installation.

SmartPhone application – Android application is available for easy installation and consultation onsite.

Autonomous – COPERNIC uses very low power consumption electronics. It runs on a lithium battery and has an estimated life of 10 years (one opening of the fire hydrant per day).

Life message – A message is sent weekly. When the fire hydrant is not used, it lets you know that it is still in working order.

TEMPO

BAYARD RANGE

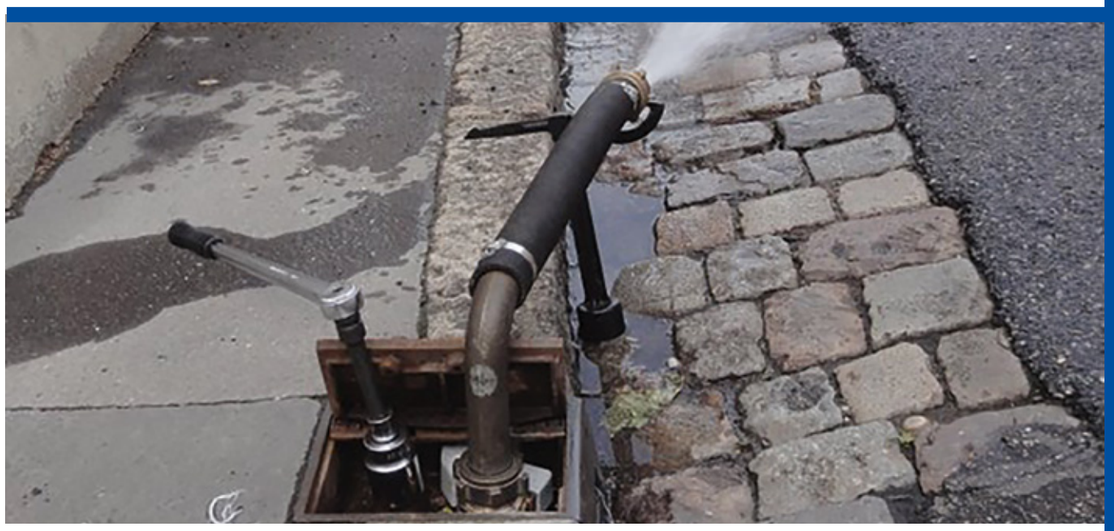

The metering tool for underground water hydrants

TEMPO I.L.S is a solution for monitoring the use of underground water hydrants. It automatically detects hydrant opening and evaluates water consumption. With its small design, this add-on is compatible with most existing BAYARD underground water hydrants. Data collection is performed by walk-by teams.

MARKETS

Water distribution network

TECHNICAL DATA

Storage temperature: -30°C to + 85°C

Waterproof: IP68

Maximum pressure: 10 bar

ADVANTAGES

LOW HEAD LOSS

Insignificant change of flow rate due to an optimized design.

NRW

Volume estimation to boost network efficiency and optimize Non-Revenue Water.

SMALL SIZE

Easy to install: device inserted between the hydrant and the outlet.

CHARACTERISTICS

Data logger – TEMPO can store up to 1000 drawings in the local memory.

Compatibility – TEMPO is compatible with BAYARD underground water hydrants ND 40mm.

Wireless communication – TEMPO uses radio communication to retrieve data on-site via a SmartPhone and/or a walk-by terminal.

SmartPhone application – Android and IOS applications are available for easy installation and data setting on-site.

Autonomous – TEMPO uses very low power consumption electronics. It runs on a lithium battery and has an estimated life of 6 years.

smart@talis-group.com

TAGUA

BAYARD RANGE

Asset management solution 100% web-based.

TAGUA allows the creation of a database of accumulated knowledge. It provides tools to organize maintenance of equipment and create work orders. The users, through a NFC enabled smartphone with Smart-Inside Android application, gather and upload data to the Cloud. NFC tags are used for the purpose of automatically identifying and tracking attached equipment. They are the key to access to the database on site and proof that the operator has been on site.

MARKETS

- Water distribution network
- Sewage network and treatment
- Irrigation
- Water transmission
- Dams and hydro power
- Desalination
- Fire protection network
- Industrial water applications
- Water treatment

TECHNICAL DATA

Software: Access to TAGUA software by using Google Chrome
Secure access by login and password
Database Hyperfile SQL

Tag: 13.56MHz RFID Tags ISO 15693 Compatible NFC Working temperatures: -20°C to +90°C

Smartphone Requirements: Android platform from version 4.4
Connectivity through 3G/HSDPA/LTE, Wifi
NFC reader, GPS chip, Camera

ADVANTAGES

TIME SAVING

Identification and exact geolocation of units.

SECURE

The reading of the tag attests that the technician has been on site.

TOP-NOTCH SERVICE

Real-time data updating, consultation online.

MAIN FEATURES

Features are:
- Detailed inventory of park.
- Precise location of each unit.
- Planning of work orders.
- Time management of the field teams.
- Online data archiving.

Communication tools are:
- Automatic drafting of intervention reports.
- Reporting to the customer by email.
- Sending alert by SMS or email.

SMART INSIDE

www.smart-inside.com is the web site which brings together all our software solutions for Moneca, Copernic and Tagua. Owner access is via a secure connection using a web browser.

MONECA

Moneticard WEB is software for MONECA owner to manage both the user cards and the MONECA network. Using MONECA's modem capability, the database is updated automatically from the MONECA. It allows to retrieval data about water consumption by user cards or by assets, receipt of an email alert in the event of alarm activation on an asset and receipt of automatic reports with customized information. If no modem is deployed, the database of the asset can be retrieved on a smartphone using the MONECA App by a walk-by team and transferred automatically to the MONETICARD WEB.

COPERNIC

Each fire hydrant is geo-localized on a map. For installation, the "Smart Inside Mobile" App enables the link between the Copernic and a referenced fire hydrant. A general tab shows the synthesis of the fire hydrant, stating total number of openings and water quantity evaluation. Individual status can be checked as well as individual drawing. Radio status is also provided in real time. Data can be exported, or sent automatically by email on a regular basis. Alerts by sms or email can also be sent if any alarm occurs.

TAGUA

Each asset is geo-localized on a map. For installation, the "Smart Inside Mobile" App enables the link between the asset and a referenced Tag. A general tab shows the synthesis of the asset availability. The individual life sheet can be checked with latest information downloaded from the field team with the App. Data can be exported, or sent automatically by email on a regular basis. Alerts by sms or email can also be sent if any asset status is modified.

SMART INSIDE FEATURES:

- Connect to the website from anywhere.
- Share data with other work group.
- Independent from computer configuration.
- Keep your data safe Automatically save.
- 5 languages available.
- Continuous new functionalities.
- Remote support available.

Customer can manage their own user's accounts and their proprietary data. SMART INSIDE is available in French, English, German, Arabic and Hebrew with possibility of adding other languages. It is based on redundant servers in France, SLL encrypted and conforms to ISO 27001 with premium availability rate.

smart@talis-group.com

TALIS

Product brochure

INFINITY resilient seated gate valve

PBR_RGV20191216A_INFINITY_EN

PBR_RGV20191216A_INFINITY_EN

RESILIENT SEATED GATE VALVES

INFINITY

The latest in TALIS's proven range of valves, the INFINITY represents a new generation of resilient seated gate valves [DN40-700]. As well as boasting of the latest technological advances and unique technical features, INFINITY has been 100% designed and manufactured in Europe using high quality materials and the latest manufacturing technologies, to guarantee, to our valuable customers, an extraordinary lifetime, outstanding operability and unique safety features.

FUNCTIONS

Isolation resilient seated gate valves, with wedge fully encapsulated in elastomer, for ON/OFF duty, and operation by means of handwheel or T-key.

ADVANTAGES

- **Low torque:** INFINITY and its new wedge and stem technology ensures smooth functionality with outstanding low torque values.
- **Longer service life:** new guiding system for the wedge with male composite sliding skate in order to easily achieve the 2500 cycles endurance test required by European standards.
- **Corrosion resistance:** high quality materials. Wide range of coatings available. Threadless bonnet up to DN300 that allows continuous coating.
- **Low head loss:** clear way and straight bore design from DN40 up to DN600 in order to allow a free path without restriction of the fluid.
- **Bubble tight shut off:** new wedge design with increased thickness of the elastomer at the sealing areas to improve tightness.

APPLICATIONS

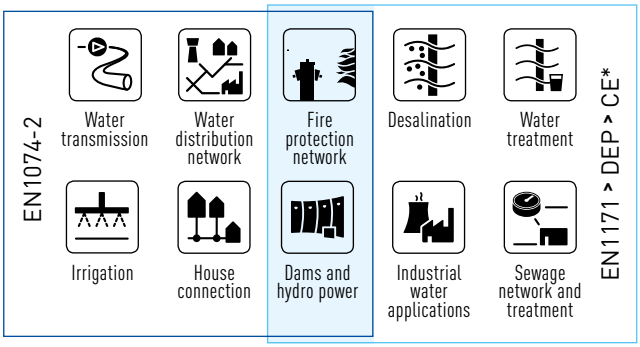

* See page 22 for gate valves which are subjected to CE marking according to the European "Pressure Equipment Directive" 2014/68/EU (PED).

USES

- **On networks, gate valves can be:**
  - Used both as part of new works and renovations.
  - Installed outside, buried in the ground, in valves' room, or in buildings.
- **The use of gate valves allows user:**
  - To balance the distribution of water at all points in the mesh network (in open or closed position).
  - To isolate control valves, fire hydrants, air valves, pumps, etc. for their maintenance.
  - To perform maintenance on the network (isolation of part of the network).
  - To stop the flow in the case of failure or pipe incident.
  - To drain water tanks or sections of the water network.

The technical data and performance may be modified without prior notice depending on the technical advances.

F4/F5

PAGE: 10

TECHNICAL DATA

DN range: 40-300mm
PN/PFA: 16bars

DESCRIPTION

Gate valves with flange connection. Available with Standard body length according to EN 558 Series 14 or Series 15. To be operated by means of Handwheel or T-Key.

F4/F5

PAGE: 12

TECHNICAL DATA

DN range: 350-700mm
PN/PFA: 16bars

DESCRIPTION

Gate valves with flange connection. Available with Standard body length according to EN 558 Series 14 or Series 15. To be operated by means of Handwheel or T-Key.

BS

PAGE: 14

TECHNICAL DATA

DN range: 50-300mm
PN/PFA: 16bars

DESCRIPTION

Gate valves with flange connection. Comply to BS5163 standard with length according to BS EN 558 Series 3. To be operated by means of Handwheel or T-Key.

INFINI-3

PAGE: 16

TECHNICAL DATA

DN range: 50-300mm
PN/PFA: 16bars

DESCRIPTION

Combination of 3 Gate valves with flange connection. Compact designs to use where space is at premium, for example in urban applications. Different combinations of diameters can be available. To be operated by means of Handwheel or T-Key.

INFINI-4

PAGE: 16

TECHNICAL DATA

DN range: 50-300mm
PN/PFA: 16bars

DESCRIPTION

Combination of 4 Gate valves with flange connection. Compact designs to use where space is at premium, for example in urban applications. Different combinations of diameters can be available. To be operated by means of Handwheel or T-Key.

PE ENDS

PAGE: 18

TECHNICAL DATA

DN range: 40/50 - 300/315 mm
PN/PFA: 10 or 16bars

DESCRIPTION

Gate valves with PE ends for assembly on PE pipes with electrofusion couplings or by butt fusion welding process. Gives continuity to the installation. To be operated by means of Handwheel or T-Key.

PREPARED FOR ELECTRIC ACTUATOR

SEE OTHER DEDICATED BROCHURE

TECHNICAL DATA

DN range: 40-300mm
PN/PFA: 16bars

DESCRIPTION

Gate valves with flange connection. Available with Standard body length according to EN 558 Series 14 or Series 15. To be operated by means of Electric Actuator.

PREPARED FOR ELECTRIC ACTUATOR

SEE OTHER DEDICATED BROCHURE

TECHNICAL DATA

DN range: 350-700mm
PN/PFA: 16bars

DESCRIPTION

Gate valves with flange connection. Available with Standard body length according to EN 558 Series 14 or Series 15. To be operated by means of Electric Actuator.

The technical data and performance may be modified without prior notice depending on the technical advances.

CHARACTERISTICS

- Made of **high quality materials** according to the relevant standards.
- **Clear way and straight bore,** so the flow is optimum with minimum head losses.
- **Replaceable packing** under pressure.
- **Bayonet** stuffing nut with three O-rings to guarantee the tightness throughout the stem (up to DN300).
- **Patented* three locking tab for bayonet system** up to DN300 to avoid self dismantling.
- **Innovative dust guard** made of three O-rings integrated into one single piece that protects the valve from floods, salt spray and dust, and ensures full isolation (up to DN300).
- Wedge **fully encapsulated** in EPDM for a better resistance to corrosion.
- Integral male composite sliding skate as guiding system for **easy operation** under maximum differential pressure.
- Body bonnet bolts are protected with hot melt glue.
- **Rounded surfaces** of the body ensure a uniform coating and protection of the highest quality.
- **Excellent corrosion resistance** thanks to the fully coated bonnet (not threads) and the epoxy powder coating.
- Stem in stainless steel.
- **Maintenance free.**
- Designed to be operated by handwheel or T-key.
- **Approved** by major organizations worldwide for drinking water.
- In conformity with **European standard** EN 1074-2 (annex A) and EN 1171 (category 3).
- **100% tested** acc. to EN 12166-1 standard.

(*) List of the countries on request.

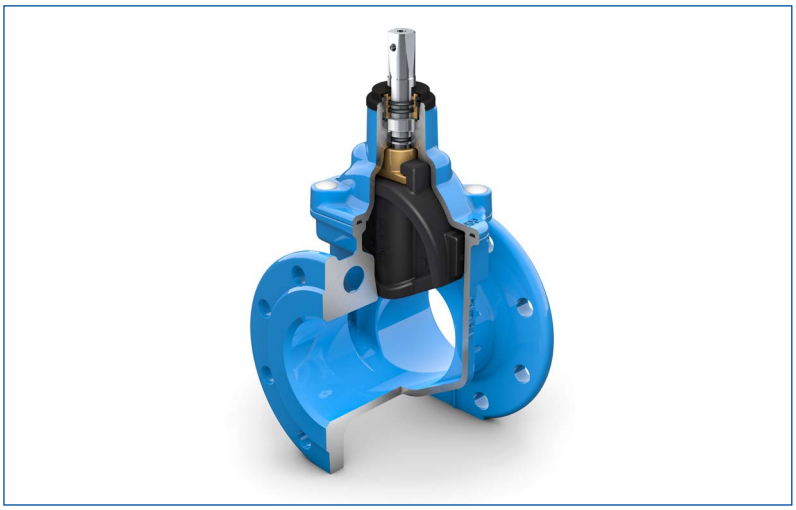

APPROVALS

- DVGW, NF, ACS, KIWA, OVGW, WRAS, VdS, ...

OPTIONS/VARIANTS

- GSK approved, epoxy 300 microns mini, others ...
- Full enamel coating.
- Electric actuator, Pneumatic/ Hydraulic cylinder, others ...
- Visual mechanical position indicator with optional electrical limit switch.
- Configuration for sea water, sewage water and hot water.
- Valve complying to BS5163 type B.
- Wedge fully encapsulated in NBR or hot potable water approved EPDM (up to 70ºC).
- Bolts in stainless steel A4.
- Accessories (handwheel, captop, stem extension, others ...).

TECHNICAL DATA

- **Nominal Diameter (DN):** DN40 to DN700.
- **Body length to EN558:**
  Series 14: short body (F4).
  Series 15: long body (F5).
  Series 3: BS.
- **Closing direction:**
  Clockwise closing (CC).
  Anticlockwise closing (ACC).
- **Nominal Pressure (PN):** PN16.
- **Flange Drilling:** PN10 or PN16 according to EN 1092-2.
- **Medium Temperature (EN1074-2):**
  - Epoxy coating: -10 to 50ºC
  - Enamel coating: -10 to 50ºC (up to 70°C under request, in the case of EN1171).
- **Water tightness:**
  Rate A according to EN 12266-1.
- **Maximum Velocity:**

PFA/PS	EN1074-2	EN1171
10 bar	3 m/s	5 m/s
16 bar	4 m/s	5 m/s

The technical data and performance may be modified without prior notice depending on the technical advances.

PBR_RGV20191216A_INFINITY_EN

MATERIAL GUIDANCE

STUFFING NUT IN ALUMINIUM-BRONZE CW307G

OTHERS VARIANTS*:

- Brass CW617N

STEM IN STAINLESS STEEL AISI 420/1.4021

OTHERS VARIANTS*:

- AISI 316 L /1.4404
- AISI 431/1.4057

WEDGE NUT IN BRASS CW617N

OTHERS VARIANTS*:

- Aluminium-bronze CW307G
- DZR Brass CW602N

EPOXY COATING IN STANDARD

OTHERS VARIANTS*:

- GSK epoxy
- Enamel
- Poliester
- Rilsan
- High Temperature coating

BOLTS IN STEEL 12.9 + GEOMET 500B COATING

OTHERS VARIANTS*:

- Stainless Steel A4

BONNET IN DUCTILE IRON EN-GJS-500-7

WEDGE IN DUCTILE IRON EN-GJS-500-7 + EPDM ELASTOMER

OTHERS VARIANTS* FOR ELASTOMER:

- NBR
- EPDM High Temperature

BODY IN DUCTILE IRON EN-GJS-500-7

(*) :These informations are only dedicated to show the different types of material for our Infinity gate valves. Variants solution can't be chosen individually, but are part of non dissociable offer on our products. For more details about our product offer, please contact us.

The technical data and performance may be modified without prior notice depending on the technical advances.

PBR_RGV20191216A_INFINITY_EN

TECHNICALADVANTAGES

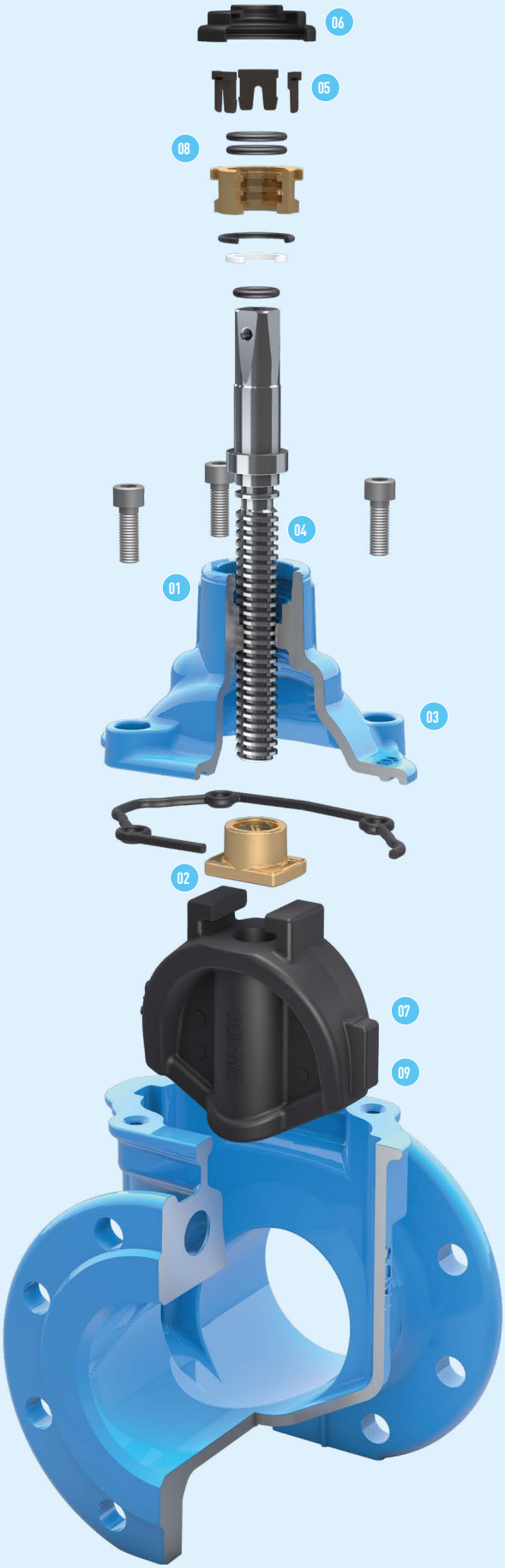

FOR ENAMELED VERSION, THE VALVE INTEGRATES AN EDGE PROTECTION (1) PLACED ALL AROUND BETWEEN THE BODY AND THE BONNET.

The technical data and performance may be modified without prior notice depending on the technical advances.

TECHNICAL ADVANTAGES

01: Due to our PATENTED* three locking tab bayonet system, The INFINITY gate valve has no threads, enabling a **continuous coating** and therefore avoiding corrosion problems.

Moreover, it is easy to remove the stuffing nut, with the valve under pressure and fully open, in order to change the O-ring.

* List of the countries on request.

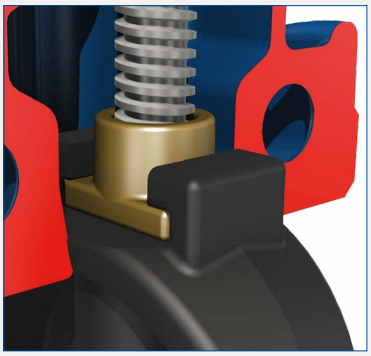

02: Free wedge nut, **reduces the stem bending forces** and at the same time enables it to be easily replaced.

03: The more compact new cap, reduces the water retention areas in order **to reduce the risk of bacterial growth.**

04: Stem and collar made in one piece in stainless steel for **better resistance to axial load and to withstand higher operating torques.** A polyamid washer (1) placed under the collar allows to reduce friction torque and protect coating inside the Bonnet.

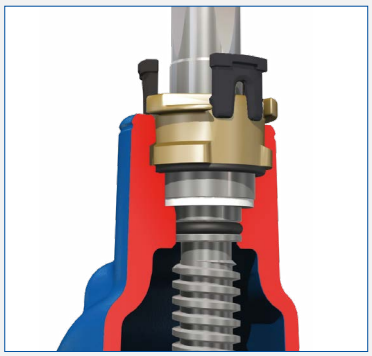

05: Our three locking tab for bayonet system prevents self-dismantling caused by vibrations.

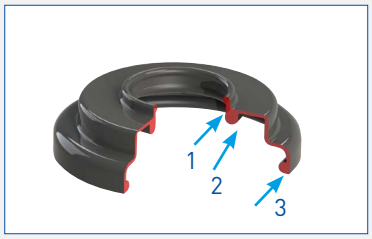

06: Dust guard integrating three O-ring shape, **prohibiting the introduction of foreign** bodies at the stem.

07: Male guiding system with composite sliding skate (1) reduces the wear of the wedge against the body, allowing a smooth functionality and a longer life time of the valve. Furthermore, the increased thickness of the elastomer at the sealing areas improves product resilience to the usual small impurities encountered in networks.

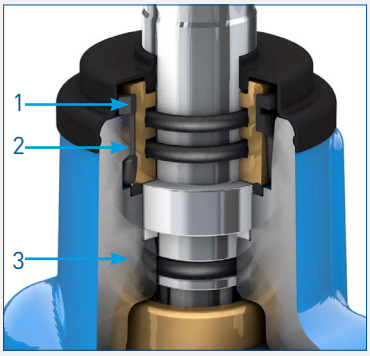

08: Triple seal at the operating stem to ensure tightness with the test of time (2500 cycles).

09: Our **new male composite sliding skate technology** minimizes the wedge friction against the body ensuring a low operating torque even under high differential pressure and preventing damage or corrosion generated by the friction.

The technical data and performance may be modified without prior notice depending on the technical advances.

PBR_RGV20191216A_INFINITY_EN

COATING

OPTIMUM PROTECTION

The INFINITY resilient seated gate valve has been designed with even more rounded surfaces and more ergonomic shapes that allow more uniform coating and ensure protection of the highest quality.

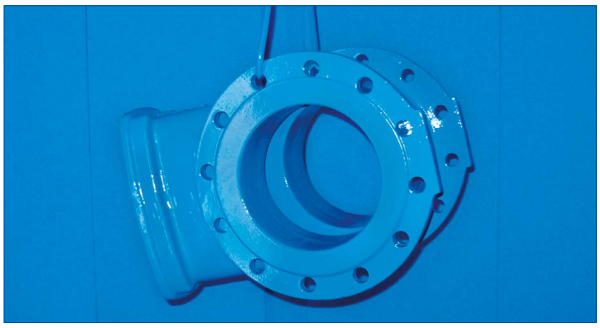

Corrosion protection with powder epoxy

BELGICAST valves are protected with epoxy powder both internally and externally, both the bonnet and the body in a continuous manner, as the model INFINITY with patented bayonet nut has no threads, thus ensuring complete corrosion protection.

The epoxy powder used by BELGICAST is approved for use with potable water by the most prestigious institutions worldwide. Moreover, BELGICAST painting facilities are approved according to GSK standard (RAL Quality Mark). If you need your valves coated according to this process, please do not hesitate to enquire.

Permanent protection with enamel

Optionally, BELGICAST can manufacture gate valves completely enamelled. Vitreous enamel is highly resistant to corrosion, abrasion, sunlight and sedimentation due to its low porosity and smooth surface. The enamel is vitrified at 720° C and forms a perfect and permanent bond at the foundry.

BELGICAST's extensive experience in the manufacture of gate valves, together with modern enamel equipment, allows production of the highest quality.

TEMPERATURES

Depending on the applied anticorrosive coating, the INFINITY gate valve is suitable for the following continuous operating temperatures:

- Epoxy powder protection: –10 °C to 50ºC.
- Enamel protection: –10 °C to 50ºC (70°C under request).

VERSION WITH ENAMEL COATING

The technical data and performance may be modified without prior notice depending on the technical advances.

QUALITY & TESTING

VALVE TESTING ACCORDING TO EN 12266-1 - EN 1074

Testing pressures

- Shell tightness: 25 bar at room temperature.
- Seat tightness: 17.6 bar at room temperature.

Minimum test duration (in seconds)

Nominal diameter DN	Shell	Seat
Up to DN50 included	15	15
From DN65 up to DN150 included	60	60
From DN200 up to DN300 included	120	120
DN350 and above	300	120

Maximum allowable seat leakage

The criterion for seat leakage of BELGICAST resilient seated gate valves is Rate A: no visually detectable leakage for the duration of the test ("zero drops").

Quality control

- 100% of BELGICAST resilient seated gate valves are tested according to EN 12266-1, DIN 3230, or as per customer requirements.
- According to EN 1074 (2,500 cycles endurance resistance).

The technical data and performance may be modified without prior notice depending on the technical advances.

PBR_RGV20191216A_INFINITY_EN

MATERIALS & DIMENSIONS

F4/F5 - DN40/300 - PN10/16

(according to EN1074-2 (annex A) and EN1171 (category 3))

Item	Description	N°	Material	Standard
1	Body	1	EN-GJS-500-7 [2]	EN 1563
2	Bonnet	1	EN-GJS-500-7 [2]	EN 1563
3	Wedge	1	EN-GJS-500-7	EN 1563
4	Wedge coating	1	EPDM [1]	EN 681-1
5	Stem	1	1.4021	EN 10088
6	Wedge lock nut	1	Copper alloy CW617N	EN 12165
7	Body-bonnet gasket	1	EPDM [1]	EN 681-1
8	Stem washer	1	POM	-
9	O-ring (stem)	1	EPDM [1]	EN 681-1
10	Stuffing nut (bayonet)	1	Al-br CW307G	EN 12165
11	O-ring (stuffung nut)	2	NBR	ASTM D2000
12	O-ring (stuffing nut/bonnet)	1	NBR	ASTM D2000
13	Body bonnet bolting	acc/DN	Steel 12.9 Geomet coated	EN ISO898-1
14	Dust guard	1	EPDM	EN 681-1
15	Handwheel	1	Stamped steel [3]	-
16	Handwheel bolting	1	1.4301	EN 10088
17	Handwheel washer	1	1.4301	EN 10088
18	Square cap	1	EN-GJS-500-7 [3]	EN 1563
19	Square cap bolting	1	Steel 8.8 Geomet coated	EN ISO898-1
20	Square cap plug	1	Lupolen	-
21	Wedge sliding skate [4]	2	Composite	-
22	Locking tabs	3	Composite	-

1) or NBR, depending on the approval and on the application. 2) blue coating (Ral 5015) with epoxy powder. 3) black epoxy coating. 4) DN40/50 without wedge sliding skates.

DN	øD (mm)	EN 1092-2 PN10			EN 1092-2 PN16			EN 558 (DIN 3202)		H (mm)	L (mm)	øD1 (mm)	No. of turns for closing	Weight (kg)	
		øK (mm)	øG (mm)	nºxd	øK (mm)	øG (mm)	nºxd	S14 (F4) (mm)	S15 (F5) (mm)					S14 (F4)	S15 (F5)
40	150	110	84	4x19	110	84	4x19	140	240	174	75	150	11,5	6,7	7,3
50	165	125	99	4x19	125	99	4x19	150	250	197	83	150	14	8,3	8,8
65*	185	145	118	4x19	145	118	4x19	170	270	237	93	150	15	12,3	13
80**	200	160	132	8x19	160	132	8x19	180	280	260	100	200	18	13,7	14,9
100	220	180	156	8x19	180	156	8x19	190	300	285	110	200	21,5	16,4	17,9
125	250	210	184	8x19	210	184	8x19	200	325	340	125	300	27	22,5	25,2
150	285	240	211	8x23	240	211	8x23	210	350	373	143	300	32	27,2	30,6
200	340	295	266	8x23	295	266	12x23	230	400	460	170	400	41,5	46,9	54,2
250	400	350	319	12x23	355	319	12x28	250	450	549	200	400	43	69,5	78,8
300	455	400	370	12x23	410	370	12x28	270	500	630	228	500	51	96,5	114,5

* DN60 drilling on request. ** DN80 with 4 holes drilling on request.

The technical data and performance may be modified without prior notice depending on the technical advances.

F4/F5 - DN40/300 - PN10/16

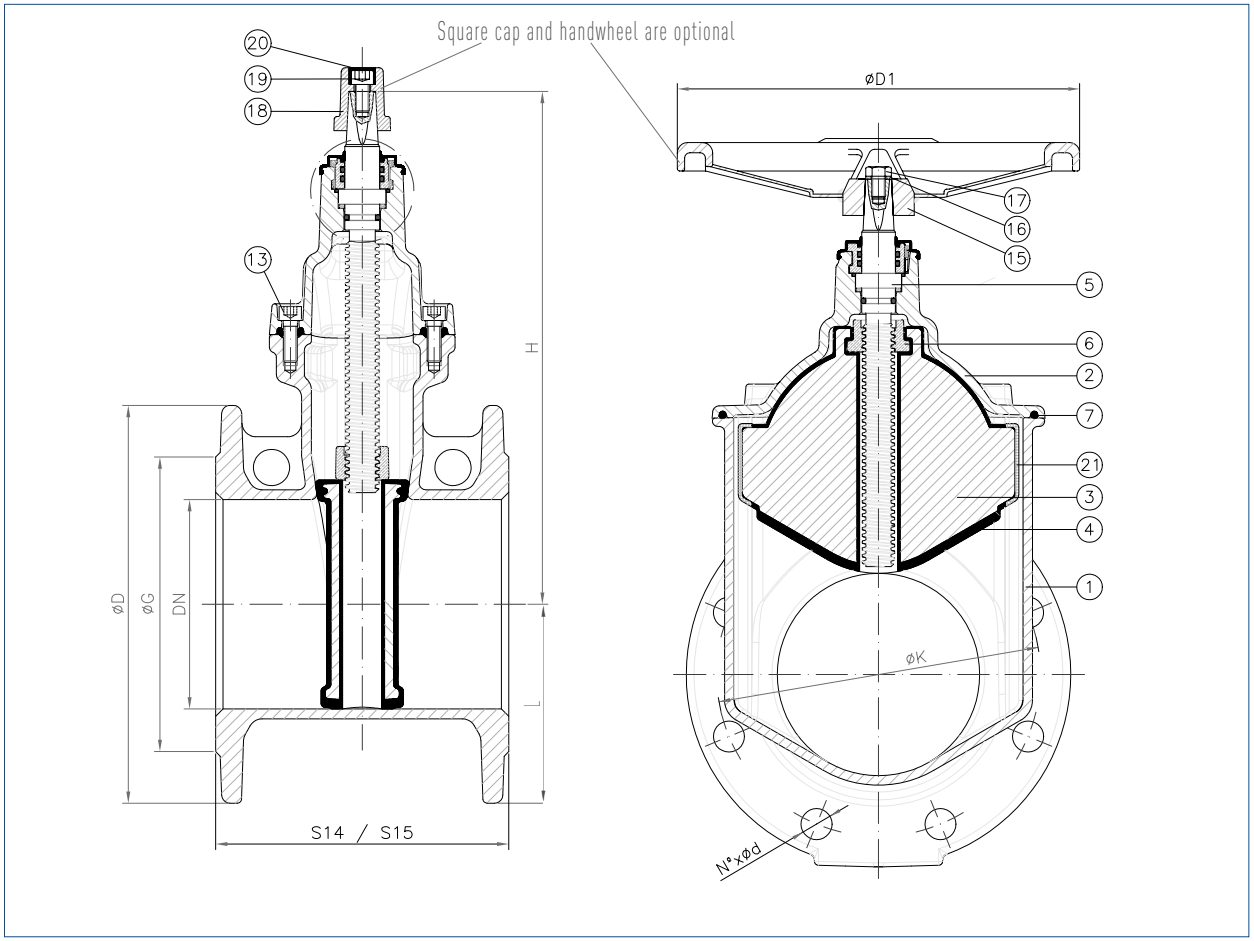

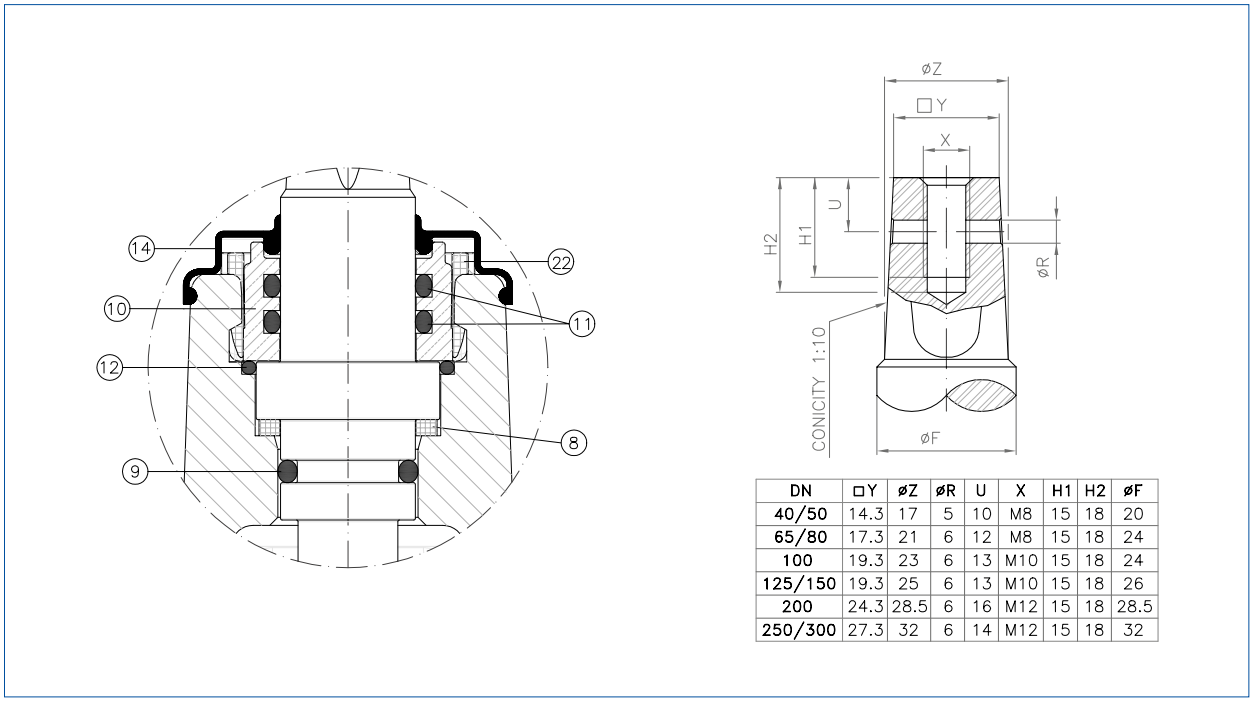

DN	□Y	ØZ	ØR	U	X	H1	H2	ØF
40/50	14.3	17	5	10	M8	15	18	20
65/80	17.3	21	6	12	M8	15	18	24
100	19.3	23	6	13	M10	15	18	24
125/150	19.3	25	6	13	M10	15	18	26
200	24.3	28.5	6	16	M12	15	18	28.5
250/300	27.3	32	6	14	M12	15	18	32

The technical data and performance may be modified without prior notice depending on the technical advances.

PBR_RGV20191216A_INFINITY_EN

MATERIALS & DIMENSIONS

F4/F5 - DN350/700 - PN10/16

(according to EN1074-2 (annex A) and EN1171 (category 3))

Item	Description	N°	Material	Standard
1	Body	1	EN-GJS-500-7 [2]	EN 1563
2	Bonnet	1	EN-GJS-500-7 [2]	EN 1563
3	Wedge	1	EN-GJS-500-7	EN 1563
4	Wedge coating	1	EPDM [1]	EN 681-1
5	Stem	1	1.4021	EN 10088
6	Wedge lock nut	1	Copper alloy CW617N	EN 12165
7	Body bonnet gasket	1	EPDM [1]	EN 681-1
8	Lower packing bushing	1	POM	-
9	O-ring (stem)	2	EPDM [1]	EN 681-1
10	Upper packing bushing	1	POM	-
11	O-ring int (upper packing bushing)	2	NBR	ASTM D2000
12	O-ring ext (upper packing bushing)	1	NBR	ASTM D2000
13	Body bonnet bolt	acc/DN	Steel 8.8 Geomet coated	EN ISO898-1
14	Dust guard	1	EPDM	EN 681-1
15	Handwheel	1	Stamped steel [3]	-
16	Handwheel bolt	1	1.4301	EN 10088
17	Handwheel washer	1	1.4301	EN 10088
18	Square cap	1	EN-GJS-500-7 [3]	EN 1563
19	Square cap bolt	1	Steel 8.8 Geomet coated	EN ISO898-1
20	Square cap plug	1	Lupolen	-
21	Wedge sliding skate	2	Composite	-
22	Upper bonnet	1	EN-GJS-500-7 [2]	EN 1563
23	O-ring (lower packing bushing)	1	EPDM [1]	EN 681-1
24	Axial ball bearing	2	Stainless steel	-
25	Bonnet-upper bonnet O-ring	1	NBR	ASTM D2000
26	Bonnet-upper bonnet bolt	4	Steel 8.8 Geomet coated	EN ISO898-1
27	Eyebolt	2	Steel 8.8 JS500 coated	EN ISO898-1
28	Cotter	1	Steel 8.8	EN ISO898-1
29	Packing washer	1	254 SMO	DIN 1.4547

1) or NBR, depending on the approval and on the application. 2) blue coating (Ral 5015) with epoxy powder.
3) black epoxy coating.

FOR VALVES WITH MAXIMUM WORKING PRESSURE OF 16 BAR:

DN	EN 1092-2 PN 10				EN 1092-2 PN 16				EN 558 (DIN 3202)		H (mm)	L (mm)	B (mm)	øD1 (mm)	No. of turns for closing	Weight kg			
																S14 (F4)		S15 (F5)	
	øD (mm)	øK (mm)	øG (mm)	no. x d	øD (mm)	øK (mm)	øG (mm)	no. x d	S14 (F4) (mm)	S15 (F5) (mm)						PN10	PN16	PN10	PN16
350	520	460	429	16x23	520	470	429	16x28	290	550	812	260	506	600	51	190	190	213	213
400	580	515	480	16x28	580	525	480	16x31	310	600	905	290	606	600	58	274	274	311	311
450	640	565	530	20x28	640	585	548	20x31	330	650	1002	320	672	600	65	310	309	363	362
500	715	620	582	20x28	715	650	609	20x34	350	700	1054	358	748	600	72	398	396	445	443
600	780	725	682	20x31	840	770	720	20x37	390	800	1285	420	955	800	87	670	668	776	774
700*	895	840	794	24x31	910	840	794	24x37	-	900	1285	455	955	800	87	-	-	970	975

FOR VALVES WITH MAXIMUM WORKING PRESSURE OF 10 BAR:

DN	EN 1092-2 PN10				EN 558 (DIN 3202)		H (mm)	L (mm)	B (mm)	øD1 (mm)	No. of turns for closing	Weight (kg)	
	øD (mm)	øK (mm)	øG (mm)	n°xd	S14 (F4) (mm)	S15 (F5) (mm)						S14 (F4)	S15 (F5)
600	780	682	825	20x31	390	-	1285	390	955	800	87	553	-
700*	895	794	840	24x31	-	900	1285	447.5	955	800	87	-	815

* Reduced bore of 600 mm. Valves produced from DN600/S14 with flanged conical adapters bolted on each side (see next page).
For DN600 to 700, version with by-pass possible on request.

The technical data and performance may be modified without prior notice depending on the technical advances.

F4/F5 - DN350/600 - PN10/16

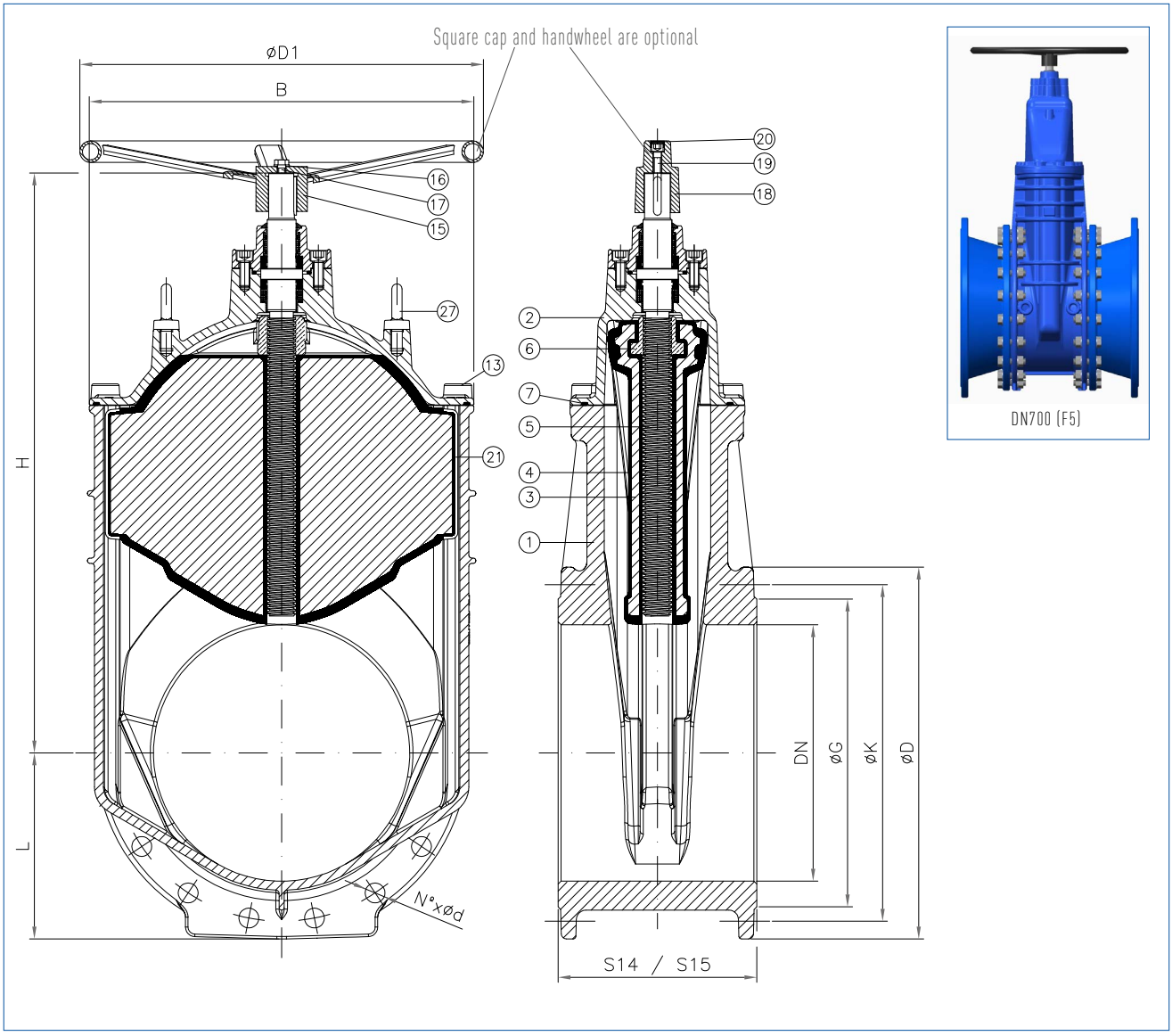

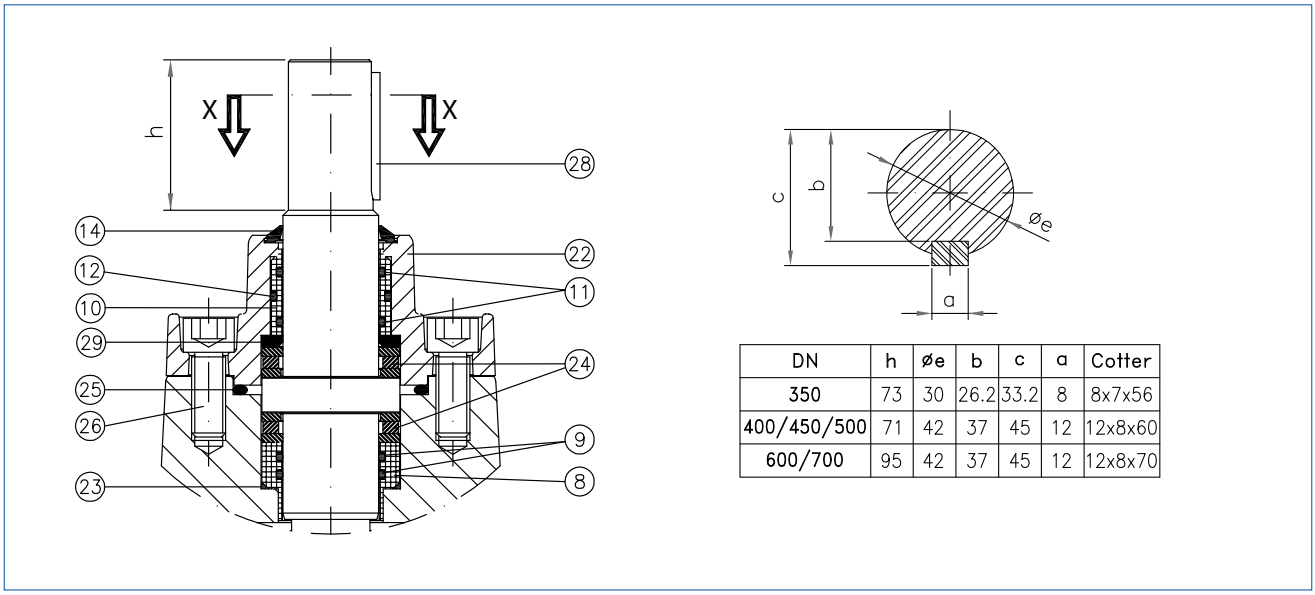

DN	h	øe	b	c	a	Cotter
350	73	30	26.2	33.2	8	8x7x56
400/450/500	71	42	37	45	12	12x8x60
600/700	95	42	37	45	12	12x8x70

The technical data and performance may be modified without prior notice depending on the technical advances.

PBR_RGV20191216A_INFINITY_EN

MATERIALS & DIMENSIONS

BS - DN50/300 - PN10/16

(ACCORDING TO EN1074-2 (ANNEX A), EN1171 (CATEGORY 3) AND BS5163*)

Item	Description	N°	Material	Standard
1	Body	1	EN-GJS-500-7 [2]	EN 1563
2	Bonnet	1	EN-GJS-500-7 [2]	EN 1563
3	Wedge	1	EN-GJS-500-7	EN 1563
4	Wedge coating	1	EPDM [1]	EN 681-1
5	Stem	1	1.4021	EN 10088
6	Wedge lock nut	1	Copper alloy CW617N	EN 12165
7	Body-bonnet gasket	1	EPDM [1]	EN 681-1
8	Stem washer	1	POM	-
9	O-ring (stem)	1	EPDM [1]	EN 681-1
10	Stuffing nut (bayonet)	1	Al-br CW307G	EN 12165
11	O-ring (stuffing nut)	2	NBR	ASTM D2000
12	O-ring (stuffing nut/bonnet)	1	NBR	ASTM D2000
13	Body bonnet bolting	acc/DN	Steel 12.9 Geomet coated	EN ISO898-1
14	Dust guard	1	EPDM	EN 681-1
15	Handwheel	1	Stamped steel [3]	-
16	Handwheel washer	1	1.4301	EN 10088
17	Handwheel bolting	1	1.4301	EN 10088
18	Square cap bolting	1	Steel 8.8 Geomet coated	EN ISO898-1
19	Square cap	1	EN-GJS-500-7 [3]	EN 1563
20	Wedge sliding skate [4]	2	Composite	-
21	Locking tabs	3	Composite	-
22	Square cap plug	1	Lupolen	-
23	Grub screw	6 or 8	A4	DIN 913

1) or NBR, depending on the approval and on the application. 2) blue coating (Ral 5015) with epoxy powder. 3) black epoxy coating. 4) DN50 without wedge sliding skates.

DN	øD (mm)	EN 1092-2 (BS-4504) PN10			EN 1092-2 (BS-4504) PN16			EN 558	H (mm)	H1 (mm)	øD1 (mm)	No. of turns for closing	Weight (kg)
		øK (mm)	øG (mm)	nºxd	øK (mm)	øG (mm)	nºxd	S3 (mm)					
50	165	125	99	4x19	125	99	4x19	178	197	269	150	14	8.3
65	185	145	118	4x19	145	118	4x19	190	237	301	150	15	12.6
80	200	160	132	8x19	160	132	8x19	203	260	324	200	18	14.1
100	220	180	156	8x19	180	156	8x19	229	285	348	200	21,5	16.8
125	250	210	184	8x19	210	184	8x19	254	340	403	300	27	23.6
150	285	240	211	8x23	240	211	8x23	267	373	436	300	32	28.5
200	340	295	266	8x23	295	266	12x23	292	460	528	400	41,5	50.1
250	400	350	319	12x23	355	319	12x28	330	549	618	400	43	72.7
300	455	400	370	12x23	410	370	12x28	356	630	699	500	51	99.0

*Resilient seated gate valve according to EN1074-2 (annex B) and BS5163 for operacion by «Ring key and bar» is also part of our manufacturing range, documentation upon request.documentation upon request.

The technical data and performance may be modified without prior notice depending on the technical advances.

MATERIALS & DIMENSIONS

BS - DN50/300 - PN10/16

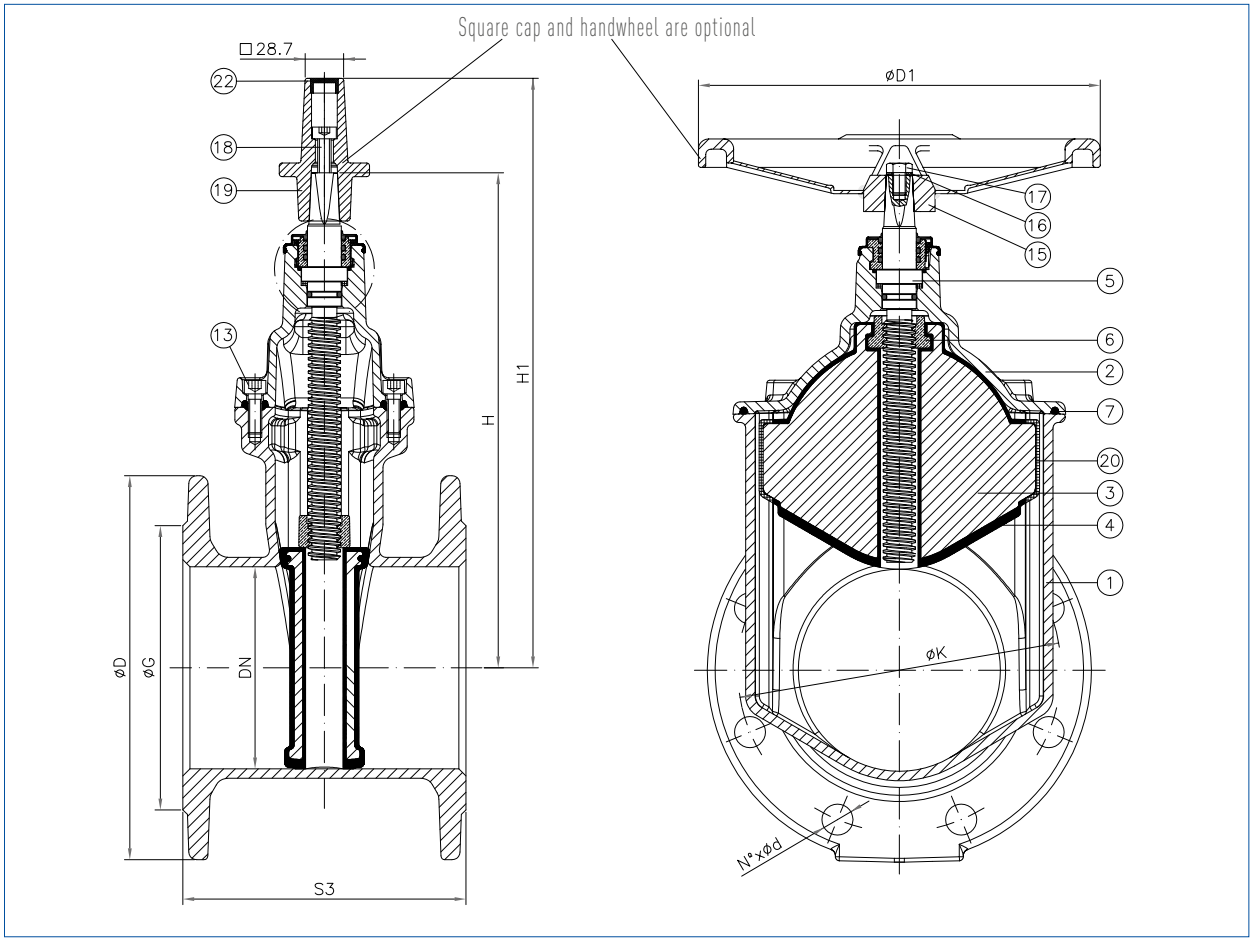

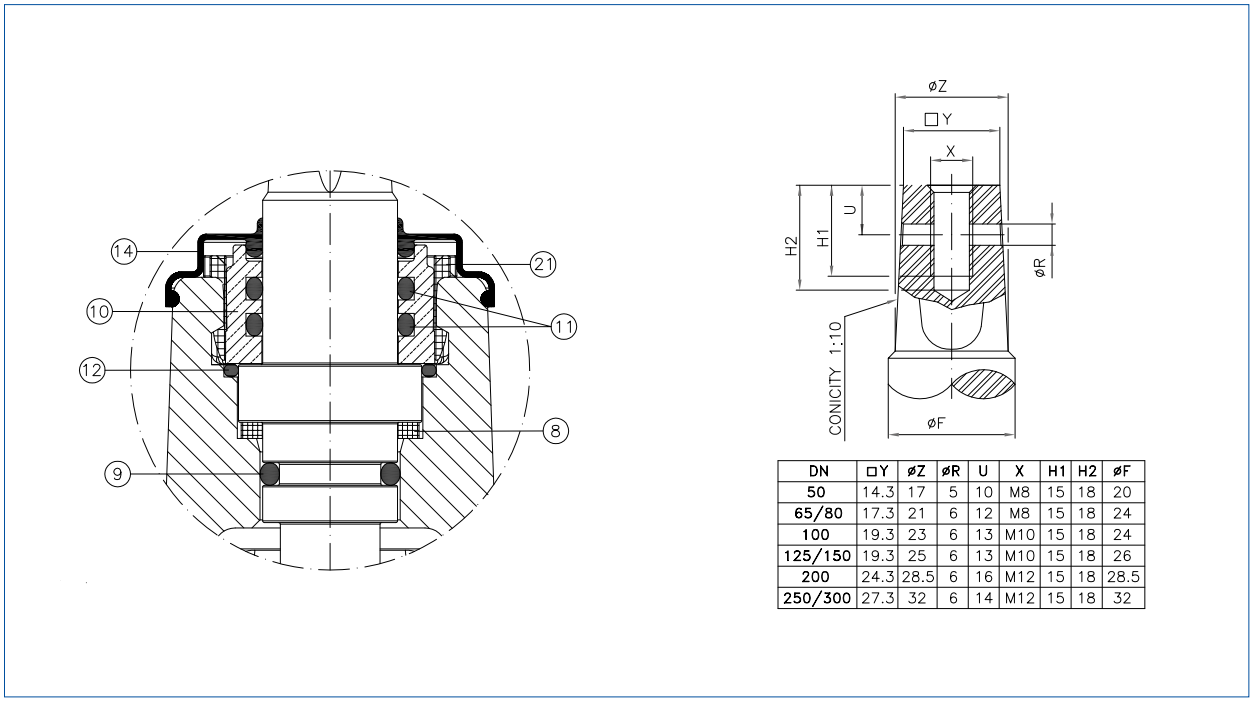

DN	□Y	øZ	øR	U	X	H1	H2	øF
50	14.3	17	5	10	M8	15	18	20
65/80	17.3	21	6	12	M8	15	18	24
100	19.3	23	6	13	M10	15	18	24
125/150	19.3	25	6	13	M10	15	18	26
200	24.3	28.5	6	16	M12	15	18	28.5
250/300	27.3	32	6	14	M12	15	18	32

The technical data and performance may be modified without prior notice depending on the technical advances.

PBR_RGV20191216A_INFINITY_EN

MATERIALS & DIMENSIONS

INFINI-3 / INFINI-4 - DN50/300 - PN10/16

(ACCORDING TO EN1074-2 (ANNEX A) and EN1171 (CATEGORY 3))

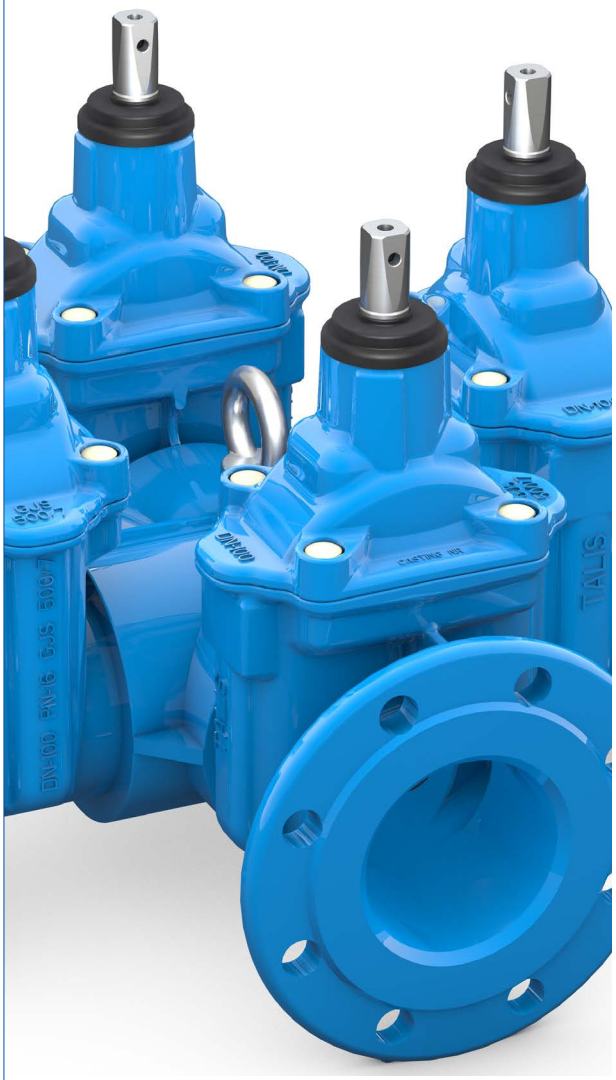

Item	Description	N°	Material	Standard
1	Body	1	EN-GJS-500-7 [2]	EN 1563
2	Bonnet	1	EN-GJS-500-7 [2]	EN 1563
3	Wedge	1	EN-GJS-500-7	EN 1563
4	Wedge coating	1	EPDM [1]	EN 681-1
5	Stem	1	1.4021	EN 10088
6	Wedge lock nut	1	Copper alloy CW617N	EN 12165
7	Body-bonnet gasket	1	EPDM [1]	EN 681-1
8	Stem washer	1	POM	-
9	O-ring (stem)	1	EPDM [1]	EN 681-1
10	Stuffing nut (bayonet)	1	Al-br CW307G	EN 12165
11	O-ring (stuffing nut)	2	NBR	ASTM D2000
12	O-ring (stuffing nut/bonnet)	1	NBR	ASTM D2000
13	Body bonnet bolting	acc/DN	Steel 12.9 Geomet coated	EN ISO898-1
14	Dust guard	1	EPDM	EN 681-1
15	Cross	1	EN-GJS-500-7 [2]	EN1563
16	O-ring (cross)	3 or 4	NBR	ASTM D2000
17	Lifting ring	1	Coated steel	-
18	Square cap	1	EN-GJS-500-7 [3]	EN 1563
19	Square cap bolting	1	Steel 8.8 Geomet coated	EN ISO898-1
20	Square cap plug	1	Lupolen	-
21	Wedge sliding skate [4]	2	Composite	-
22	Locking tabs	3	Composite	-
23	Grub screw	6 or 8	A4	DIN 913

1) or NBR, depending on the approval and on the application. 2) blue coating (Ral 5015) with epoxy powder. 3) black epoxy coating. 4) DN50 without wedge sliding skates.

DN	øD (mm)	EN 1092-2 PN10			EN 1092-2 PN16			L (mm)	H1 (mm)	H (mm)	G1 (mm)	G2 (mm)	S (mm)	No. of turns for closing	Weight (kg) INFINI-3	Weight (kg) INFINI-4
		øK (mm)	øG (mm)	nºxd	øK (mm)	øG (mm)	nºxd									
50	165	125	99	4x19	125	99	4x19	357	280	197	207	146	20	14	17	20
65	185	145	118	4x19	145	118	4x19	412	330	237	242	171	20	15	27	34
80	200	160	132	8x19	160	132	8x19	446	360	260	266	188	25	18	34	43
100	220	180	156	8x19	180	156	8x19	487	395	285	297	210	25	21,5	51	63
125	250	210	184	8x19	210	184	8x19	528	465	340	328	232	30	27	67	83
150	285	240	211	8x23	240	211	8x23	588	516	373	378	267	30	32	93	111
200	340	295	266	8x23	295	266	12x23	710	630	460	480	339	35	41,5	165	198
250	400	350	319	12x23	355	319	12x28	838	749	549	588	415	40	43	247	299
300	455	400	370	12x23	410	370	12x28	970	858	630	700	495	50	51	346	417

For version with handwheel, please consult us.

The technical data and performance may be modified without prior notice depending on the technical advances.

MATERIALS & DIMENSIONS

INFINI-3 / INFINI-4 - DN50/300 - PN10/16

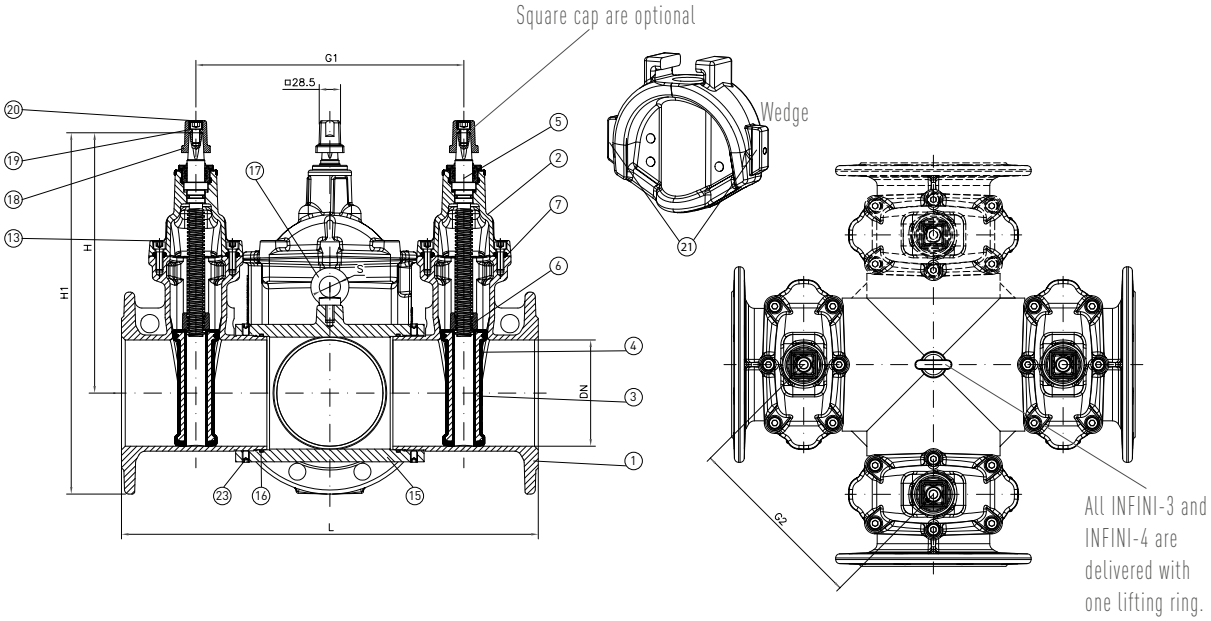

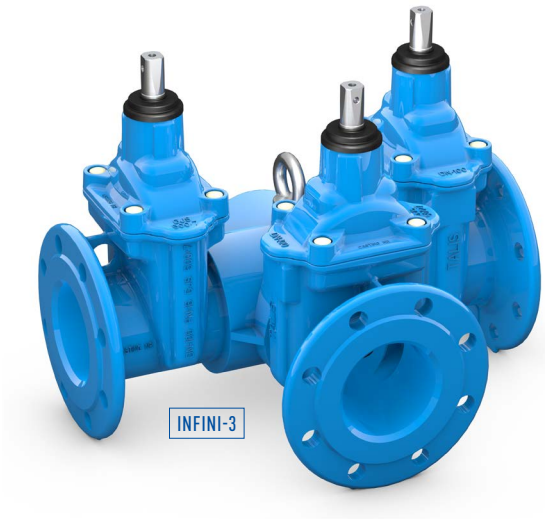

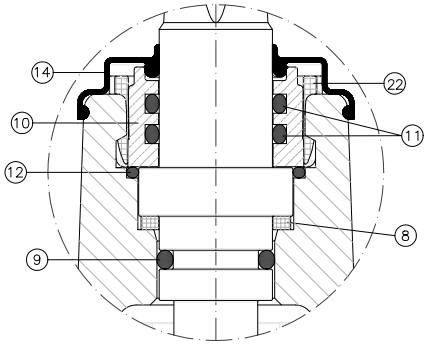

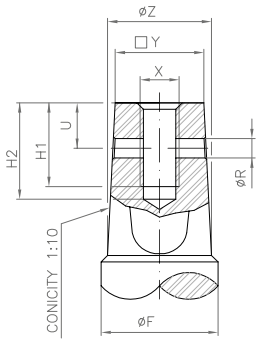

DN	□Y	øZ	øR	U	X	H1	H2	øF
40/50	14.3	17	5	10	M8	15	18	20
65/80	17.3	21	6	12	M8	15	18	24
100	19.3	23	6	13	M10	15	18	24
125/150	19.3	25	6	13	M10	15	18	26
200	24.3	28.5	6	16	M12	15	18	28.5
250/300	27.3	32	6	14	M12	15	18	32

The technical data and performance may be modified without prior notice depending on the technical advances.

PBR_RGV20191216A_INFINITY_EN

MATERIALS & DIMENSIONS

PE ENDS - DN50/300 - PN10/16

(ACCORDING TO EN1074-2 (ANNEX A) AND EN1171 (CATEGORY 3))

Item	Description	N°	Material	Standard
1	Body	1	EN-GJS-500-7 [2]	EN 1563
2	Bonnet	1	EN-GJS-500-7 [2]	EN 1563
3	Wedge	1	EN-GJS-500-7	EN 1563
4	Wedge coating	1	EPDM [1]	EN 681-1
5	Stem	1	1.4021	EN 10088
6	Wedge lock nut	1	Copper alloy CW617N	EN 12165
7	Body-bonnet gasket	1	EPDM [1]	EN 681-1
8	Stem washer	1	POM	-
9	O-ring (stem)	1	EPDM [1]	EN 681-1
10	Stuffing nut (bayonet)	1	Al-br CW307G	EN 12165
11	O-ring (stuffing nut)	2	NBR	ASTM D2000
12	O-ring (stuffing nut/bonnet)	1	NBR	ASTM D2000
13	Body bonnet bolting	acc/DN	Steel 12.9 Geomet coated	EN ISO898-1
14	Dust guard	1	EPDM	EN 681-1
15	Locking tabs	3	Composite	-
16	Wedge sliding skate [4]	2	Composite	-
17	Pressure bush	2	S355J2H	-
18	PE pipe [5]	2	Polyethylene	EN 12201-1 & 2
19	O-ring (PE pipe)	4	NBR	ASTM D2000
20	Heat-shrinkable sleeve	2	Polymer	-
21	Square cap	1	EN-GJS-500-7 [3]	EN 1563
22	Square cap bolting	1	Steel 8.8 Geomet coated	EN ISO898-1
23	Square cap plug	1	Lupolen	-

1) or NBR, depending on the approval and on the application. 2) blue coating (Ral 5015) with epoxy powder. 3) black epoxy coating. 4) DN 40/50 without wedge sliding skates. 5) PE pipe according to EN 12201-1 & 2.

DN*	PE PIPE ød / SDR	MAXIMUM WORKING PRESSURE OF 16 BAR (PFA16)							No. of turns for closing	Weight (kg)	PE PIPE ød / SDR	MAXIMUM WORKING PRESSURE OF 10 BAR (PFA10)							No. of turns for closing	Weight (kg)
		s (mm)	L (mm)	L1 (mm)	P (mm)	C (mm)	H (mm)	h (mm)				s (mm)	L (mm)	L1 (mm)	P (mm)	C (mm)	H (mm)	h (mm)		
40	ø50 / SDR11	4.6	880	215	105	64	180	40	11.5	4.5	-	-	-	-	-	-	-	-	-	-
50	ø63 / SDR11	5.8	880	220	110	64	203	50	14	5.4	ø63 / SDR17	3.7	880	220	110	64	203	50	14	5.2
65	ø75 / SDR11	6.8	900	230	120	74	246	59	15	10	ø75 / SDR17	4.5	900	230	120	74	246	59	15	9.8
80	ø90 / SDR11	8.2	900	237	127	79	270	65	18	11.5	ø90 / SDR17	5.3	900	237	127	79	270	65	18	11
100	ø110 / SDR11	10	900	310	154	82	298	78	21.5	18.2	ø110 / SDR17	6.5	900	310	154	94	298	78	21.5	17.7
100	ø125 / SDR11	11.4	975	310	154	94	294	88	21.5	18.7	ø125 / SDR17	7.4	975	310	154	94	294	88	21.5	18
125	ø140 / SDR11	12.8	1000	350	170	97	353	92	27	27.2	ø140 / SDR17	8.3	1000	350	170	97	353	92	27	26
150	ø160 / SDR11	14.6	1100	381	171	102	390	110	32	34.5	ø160 / SDR17	9.5	1100	381	171	102	383	120	32	32.5
150	ø180 / SDR11	16.4	1100	381	171	102	383	120	32	41.6	ø180 / SDR17	10.6	1100	381	171	102	383	120	32	39
200	ø200 / SDR11	18.2	1100	464	244	160	487	135	41.5	68.5	ø200 / SDR17	11.8	1100	464	244	160	487	135	41.5	66
200	ø225 / SDR11	20.5	1100	464	244	160	477	150	41.5	71	ø225 / SDR17	13.3	1100	464	244	160	477	150	41.5	68
250	ø250 / SDR11	22.8	1350	500	280	160	581	160	43	105	ø250 / SDR17	14.8	1350	500	280	160	581	160	43	100
300	ø315 / SDR11	28.7	1350	500	280	160	660	210	51	182.5	ø315 / SDR17	18.6	1350	500	280	160	660	210	51	173.5

*All gate valves with PE ends are reduced bore. PE pipe according to EN 12201-1 & 2.

The technical data and performance may be modified without prior notice depending on the technical advances.

MATERIALS & DIMENSIONS

PE ENDS - DN50/300 - PN10/16

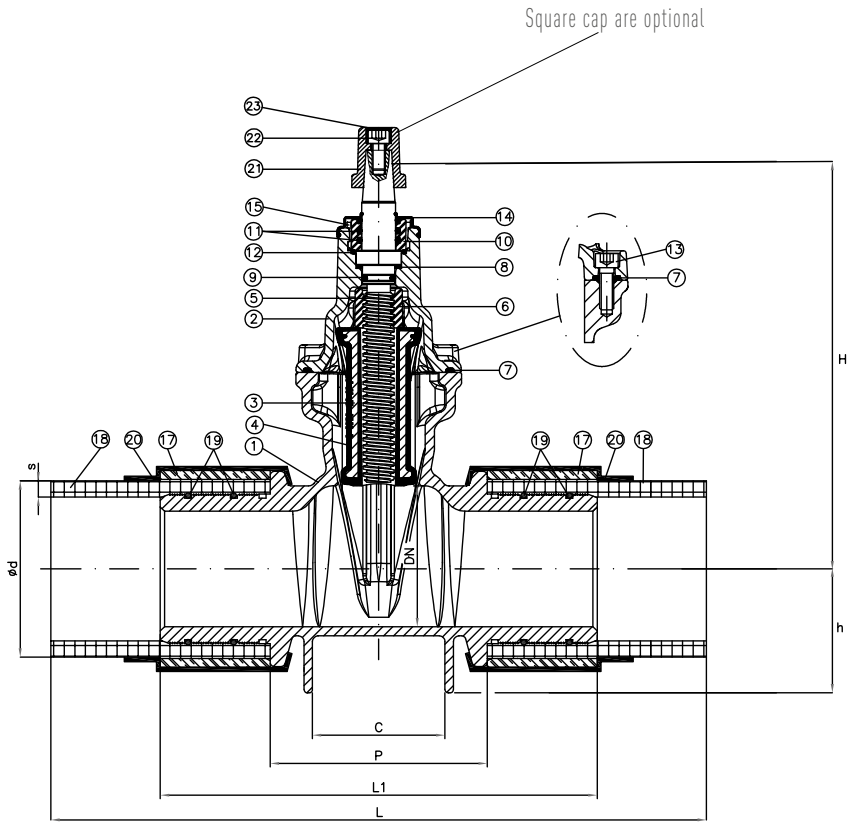

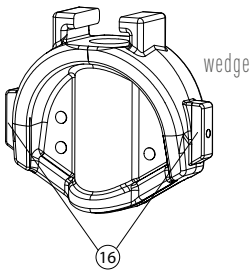

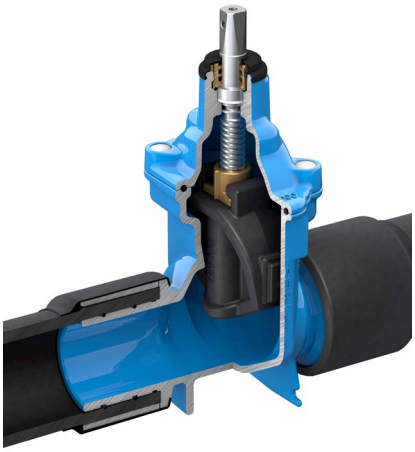

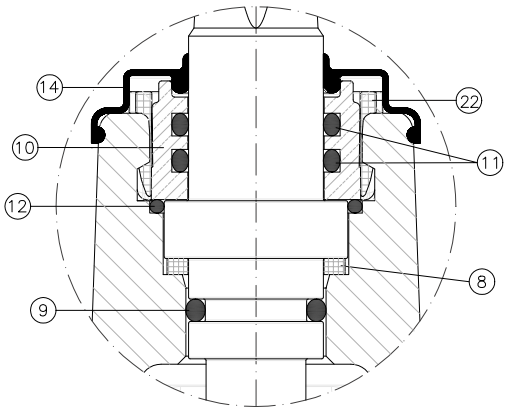

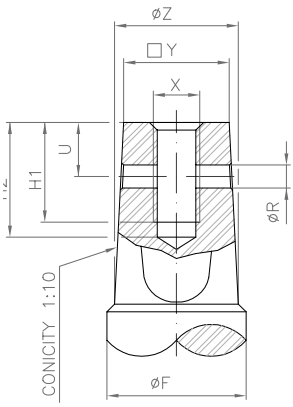

DN	□Y	øZ	øR	U	X	H1	H2	øF
40/50	14.3	17	5	10	M8	15	18	20
65/80	17.3	21	6	12	M8	15	18	24
100	19.3	23	6	13	M10	15	18	24
25/150	19.3	25	6	13	M10	15	18	26
200	24.3	28.5	6	16	M12	15	18	28.5
50/300	27.3	32	6	14	M12	15	18	32

The technical data and performance may be modified without prior notice depending on the technical advances.

PBR_RGV20191216A_INFINITY_EN

ACTUATION METHODS

TALIS offers a wide variety of actuation methods that will allow to choose the best option for each installation. The actuation can be made manually or by means of an electrical actuator with or without a gearbox. Also, we offer solutions for buried installations. Pneumatically actuated gate valves with a special design are also available for those installations where speed of actuation is a priority.

MANUAL ACTUATION

Our resilient seated gate valves are designed to be operated with handwheel or T-key. In that later case, they need to be fitted with square cap. TALIS offers handwheels with the right dimensions, according to the DN and operating torque. Our standard handwheels are made of pressed steel and we also offer ductile iron as an option. Regarding square cap tops, our products comply with the different national practices and standards.

A cap plug (1), inserted inside, indicates the closing direction. Blue color for clockwise closing direction, red color for anti-clockwise closing direction.

BURIED INSTALLATIONS

One special case of manual actuation occurs when the valve is buried and the actuation has to be done from the surface. For those cases special stem extensions, fixed or telescopic, are offered to fit with different national practices and standards. We can offer customised solutions for each country when requested. For example, TALIS offers adapters to fit plastic or casting pipes for the French market and stem extensions according to GW 336 for the German market.

ELECTRICAL ACTUATION

Another option is to operate the gate valve by means of an electric actuator. This solution also offers the possibility of installing a remote control, that allows the final user to monitor the operations of the valves. Special versions of the gate valves prepared for the actuator are equipped with top flanges according to ISO 5210. Actuators from different suppliers can be installed on this standard flange, which gives the customer the freedom to choose their actuator. TALIS can provide the operating torques of the gate valves as well as guidance in choosing the right actuator for each DN.

DN	From DN40 to DN200* included	From DN250 to DN700 included
Connecting flange ISO 5210	F10	F14

*DN200 fitted with F10 as per standard, F14 under request.

The technical data and performance may be modified without prior notice depending on the technical advances.

INSTALLATION AND OPERATION INSTRUCTIONS

GOOD TO KNOW BEFORE INSTALLATION

Before installation, in addition to the few informations given below, it is important to read the IOM manual.

Storage

- Leave the rubber wedge slightly open: if it is closed completely, the rubber suffers unnecessary compression. Remove the flange cover just before the installation.
- The gate valves should preferably be stored under cover. A long storage under extreme weather conditions can cause alterations of the coating and seals.

Assembly in pipe

- The assembly of the valve in the pipe is independent of the flow direction.
- When connecting the valve to the pipe, avoid the transmission of stress from the pipe to the valve body. For that, any pipe or pipe sections or valve not yet finally clamped in place must be provisionally supported to prevent abnormal stress on one or both sides of the valve.
- Tighten screws gradually in a star-shaped pattern, respecting the tightening torques.
- Once the valve is assembled, the threads of the bolts/rods should be greased with a graphite based waterproof grease (MOLYCOTE or similar) to prevent corrosion and facilitate subsequent dismantling operations.

Operation

- Each valve must be operated in respect of the operating torques given in our IOM manual, by means of a handwheel or a T-key ("Ring key and bar" is strictly prohibited). Do not use the valves for regulating mode.
- Do not use the valves with EPDM rubber with gaseous fluids such as propane, butane, natural gas and also with hydrocarbons fluids like petrol, diesel, ...

RECOMMENDED POSITIONS FOR GATE VALVES WITH FLANGES

From DN40 up to DN300:

1) Ideal position: vertical stem, horizontal flow

2) Horizontal stem, horizontal flow

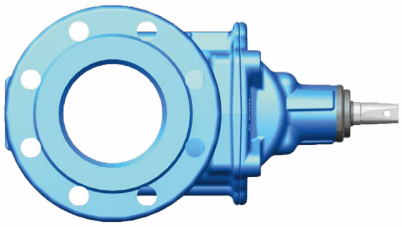

3) Horizontal stem, vertical flow

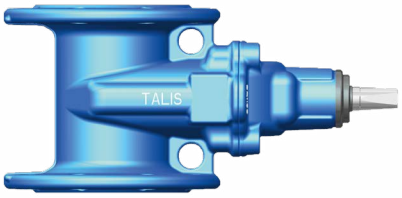

From DN350 up to DN700:

1) Ideal position: vertical stem, horizontal flow

2) Oblique stem, horizontal flow

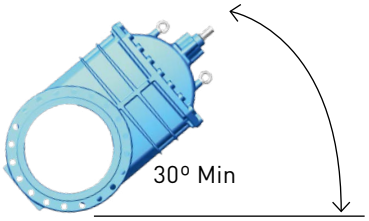

The technical data and performance may be modified without prior notice depending on the technical advances.

PBR_RGV20191216A_INFINITY_EN

EUROPEAN DIRECTIVE

European directive 2014/68/EU (PED) must be respected in all the countries of the European Union for all equipment under pressure. Valves which are subjected to this European directive are the object of a «CE» marking and also a CE declaration of conformity.

Are excluded from the scope of this directive the networks for the supply, distribution and discharge of water and associated equipment and headraces such as penstocks, pressure tunnels, pressure shafts for hydroelectric installations and their related specific accessories. In this context:

- "water" means: potable water, waste water and effluent, and sewage,
- "Networks and associated equipment" means: complete systems for the supply distribution and discharge of water. They extend up to the point of use in buildings, industrial sites and plants, and include equipment closely related to these networks such as water meter and line valves. Pressure vessels, such as expansion vessels, however are not considered to be part of such 'networks and associated equipment' and are therefore not excluded.

Within the scope of the directive, the requirements on resilient seated gate valves are given in the table beside in the case of liquid from group 2. For the gate valves which are subjected to "CE" marking (see table beside), the document of "CE" declaration of conformity is available on request.

DN	PS MAX (bar)	Fluid group	Fluid Type	CATEGORY	CE MARKING
40	16	2	Liquid having vapor pressure max at 1513 mbar, at 70°C max.	Art 4, Par 3	n.a.*
50	16	2		Art 4, Par 3	n.a.*
60	16	2		Art 4, Par 3	n.a.*
65	16	2		Art 4, Par 3	n.a.*
80	16	2		Art 4, Par 3	n.a.*
100	16	2		Art 4, Par 3	n.a.*
125	16	2		Art 4, Par 3	n.a.*
150	16	2		Art 4, Par 3	n.a.*
200	16	2		Art 4, Par 3	n.a.*
250	16	2		Art 4, Par 3	n.a.*
300	16	2		Art 4, Par 3	n.a.*
350	16	2		Cat 1	Yes
400	16	2		Cat 1	Yes
450	16	2		Cat 1	Yes
500	16	2		Cat 1	Yes
600	16	2		Cat 1	Yes
700	16	2		Cat 1	Yes

(*): according to the max working pressure defined, max temperature defined, and fluid group defined, the "CE marking" is not necessary for DN40 to 300 in the present case.

REFERENCE LIST

SEWAGE & TREATMENT

Project	Country	Year
EDAR Ondarroa	Spain	2018
ETAP Oum Azza (Rabat)	Morocco	2017
EDAR Tenerife	Spain	2017
Colextor general de la margen izq.de la ría de Mundaka (Sukarrieta – EDAR Lamiaran)	Spain	2017
ETAP Fez Marruecos	Morocco	2016
2nd Changi NEWater (WRP)	Singapore	2016
EDAR Peñíscola	Spain	2015
EDAR Moraira	Spain	2015
Ampliación EDAR de Burgos	Spain	2015
EDAR de Chichaoua	Morocco	2015
EDAR Malpica	Spain	2015
EDAR Ribeira	Spain	2015
EDAR Ourense	Spain	2015
PTAR El Bello / Wastewater Treatment Plant	Colombia	2014
Makkah Project	KSA	2013
Darsait Waste Water Treatment Plant	Oman	2013
Atotonilco Planta Tratamiento / Water Treatment Plant	Mexico	2012
6th October WTP	Egypt	2012
Arroyo Valenoso Waste Water Treatment Plant	Spain	2012
Najmat Abu Dhabi Sewage Lifting Station	UAE	2012
Sanitary Waste Water Pumping Station	Saudi Arabia	2012
Sewage pumping station Lubertsy-2 – Moscow -	Russia	2012
Vodokanal (Astana SU Arnasy)- Main sewage pumping st-	Kazakhstan	2011-2012
Arroyo Culebro Waste Water treatment Plant	Spain	2011
Ciudad Real Waste Water Treatment Plant	Spain	2011
Madrid-Valmayor Planta Tratamiento	Spain	2010

Project	Country	Year
Arroyo Quiñones Waste Water treatment Plant	Spain	2010
Tomelloso Waste Water Treatment Plant	Spain	2010
Gava Waste Water Treatment Plant	Spain	2010
Nopwasd II Waste Water Treatment Plant (CAPW)	Egypt	2010
Cairo Airport New Terminal 3	Egypt	2009
Rejas- Madrid Waste Water Treatment Plant	Spain	2009
Alejandria East Waste Water Treatment Plant (CAPW)	Egypt	2009
Ibiza Waste Water treatment Plant	Spain	2009
Madrid-Almoguera Planta de Tratamiento	Spain	2008
Benquerencia Water treatment Plant	Spain	2008
Paterna Water treatment Plant	Spain	2008
La Gavia-Madrid Waste Water Treatment Plant	Spain	2008
Epele Water treatment Plant	Spain	2007
MGUP "Mosvodokanal" Cherkizovskaya sewage pumping st	Russia	2007
Gabal El Asfar Waste Water Treatment Plant (CAPW)	Egypt	2006
La Ranilla- Waste Water Treatment Plant	Spain	2006
Saint Petersburg South-west sewage treatment plant	Russia	2005

The technical data and performance may be modified without prior notice depending on the technical advances.

REFERENCELIST

WATER SUPPLY DISTRIBUTION

Project	Country	Year
Sifón en Ría de Orearos (Aguas de Galicia)	Spain	2018
Abastecimiento al T.M. de Urdax	Spain	2018
Rep. de las conduc. del Consorcio de Aguas de Asturias: Arteria Norte	Spain	2017
Túnel de Monrepós-Huesca	Spain	2017
Network reconditioning water supply for Soekarno Hatta airport Indonesia	Indonesia	2016
Conducciçon para el abastecimiento del embalse "El Retortillo"	Spain	2016
Arterias Generales de la Desalinizadora a las Redes de Distribución	Spain	2016
Mejora abastecimiento Plan Écija (Montepalcios-Moron)	Spain	2015
Mejora abastecimiento Plan Écija (Luisiana-Fuentes Andalucia)	Spain	2015
Abastecimiento Al Aljarafe	Spain	2015
Mejora abastecimiento Plan Écija (Arahal)	Spain	2015
The reconstruction of Entuziastov highway – Moscow	Russia	2012-2013
Ruwais Housing Complex (Abu Dhabi)	UAE	2012
Khalifa port	UAE	2012
Pal Tree at Jebel Ali	UAE	2012
New Sanitary Waste Lift Station	Saudi Arabia	2012
Peravia Acueducto / aqueduct	Dominic Rep	2012
Dynamo Stadium – Moscow	Russia	2012
Olympic objects in Imerety lowland - Sochi	Russia	2011-2012
Abu Dhabi International airport	UAE	2011
Vodokanal – Taraza	Kazakhstan	2011
Mokry Dwor proejct	Poland	2011
Main water pipelines . Irkutsk	Russia	2010-2012
Sochi, main pipeline Dn500 near Mzyta river	Russia	2010
Tifert (Tunisian Indian fertiliser)	Tunisia	2010
Pushkin deposit – Vkadivostok (i.Russkiy)	Russia	2010
National Water Annual Contract	Saudi Arabia	2010
Kamala-1 pumping station and distr. Network – Krasnoyarsk	Russia	2010
Jebel Ali Airport	UAE	2009
Dubai Crescent	UAE	2009
The Palm Deira (Dubai)	UAE	2009

IRRIGATION

Project	Country	Year
Tr.de genie civil des sous sect.D1/D2 du per. Loukkos	Morocco	2018
Riego de Sucs	Spain	2016
Ampliación de la 1ª fase del Canal de Navarra	Spain	2016
Al Ain Irrigation Project	UAE	2011
Upgrading of Salam Street – Irrigation works	UAE	2010
Lleida-Segarra Garrigues Regadío / Irrigation	Spain	2008
Canal de Navarra / Navarra Channel	Spain	2008
Castejón Regadío / Irrigation project	Spain	2005
La Rioja-Najerilla Regadío / Irrigation Project	Spain	2005
Bozova (45,000 ha) Regadío / Irrigation	Turkey	2002

The technical data and performance may be modified without prior notice depending on the technical advances.

BAYARD

Control valve enabling reduction and stabilisation of the downstream pressure.

Functions

- Reduces and stabilises a higher inlet pressure to a steady lower downstream pressure regardless of variations of flow and/or inlet pressure.
- Closes/opens and puts into regulation with hand drive.

Applications

- To regulate multi pressure level networks,
- To supply water to a low pressure level network from a high pressure level network,
- To protect a device, private consumers installations, or sections of the network against excessive pressure and high upstream pressure variations,
- To reduce leakage thanks to the control of the supplying pressure,
- To save water consumption by a reduction in pressure, etc...

Tests

- Manufacturing fully tested according to ISO 5208-2.

Description

- For general information concerning the operation of a Hydrobloc control valve, please consult our general manual (series K).
- Extensive range including two different designs:
  - XG design:
    - Large flow capacity,
    - Low head loss,
    - Watertight at zero flow rate.
  - XGS design:
    - Particularly suitable for pressure reduction,
    - Better cavitation resistance,
    - Watertight at zero flow rate.
- Construction:
  - Self-lubricated double guided mobile unit,
  - Ductile iron body and bonnet,
  - Stainless steel seat for standard version until DN 400 XG design and DN 600 XGS design,
  - Powder epoxy coating,
  - Stainless steel bolting,
  - Stainless steel pilot circuit tube and fittings,
  - Pilot circuit strainer with screen in stainless steel,
  - Individually packed.
- Easy operation and maintenance:
  - Visual position indicator with manual drain,
  - Including isolating valve(s) for pressure gauges,
  - Equipped with opening speed controller "RO" (DN50 to 300 XG design, and DN150 to 400 XGS design only),
  - Chamber isolating valve independent from the adjustment of the speed controller,
  - Maintenance without disassembly from the pipeline.
  - Easy dismantling from the top.
  - Drain plug (stainless steel).
- Product according to standard EN 1074- 5.

Technical data

- Range:
  - DN 50 to 600 for XG design.
  - DN 150 to 700 for XGS design.
  - DN 800 to 1000 XG and XGS design, please consult us.
- PN 25.
- Maximum temperature: +1°C to +65°C.
- Seating: class A according to standard ISO 5208-2.
- Face-to-face dimensions according to standards EN 558-1 series 1 (except DN1000) and ISO 5752 series 1 (except DN1000).
- Flange drilling according to standards EN 1092-2 and ISO 7005-2: ISO PN 10, 16 or 25 for DN50 to 1000 (other drillings, please consult us).
- Fluid: drinking water or 2 mm filtered untreated water.
- Adjustment range: 1 to 20 bar.

TALIS
YOUR CHOICE IN WATERFLOW CONTROL

DN 50XG to 300XG and DN 150XGS to 400 XGS

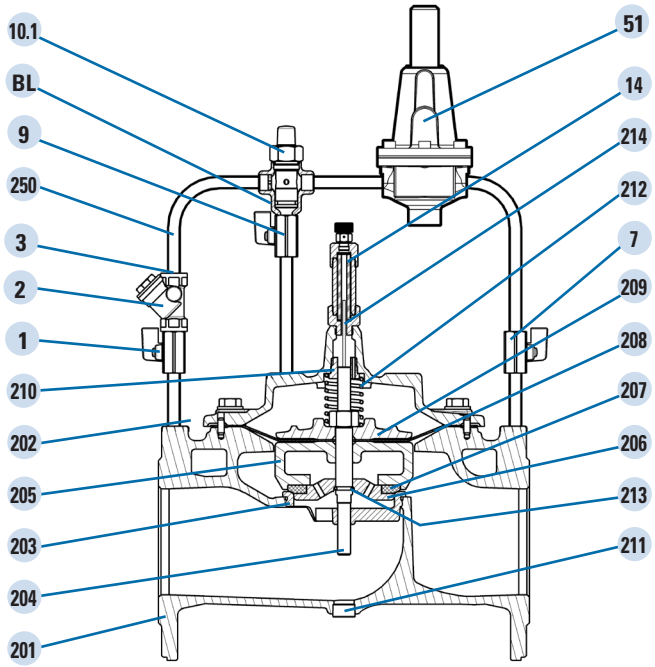

Item	Designation		Qty	Materials	Standards
Main Valve					
201	Body*		1	Ductile iron/EN-GJS-450-10	EN 1563
202	Bonnet**		1	Ductile iron/EN-GJS-450-10	EN 1563
203	Seat		1	Stainless Steel 316 / X5CrNiMo17-12-2	EN 10088
204	Stem		1	Stainless Steel 420 / X20Cr13	EN 10088
205	Valve disc holder**:	DN50XG to 200XG	1	Cast iron/EN-GJL-250	EN 1561
		DN250XG to 300XG		Ductile iron/EN-GJS-450-10	EN 1563
		DN150XGS to 250XGS		Cast iron/EN-GJL-250	EN 1561
		DN300XGS to 400XGS		Ductile iron/EN-GJS-450-10	EN 1563
206	Valve disc fastener		1	Stainless Steel 316 / X5CrNiMo17-12-2	EN 10088
207	Resilient valve disc		1	Elastomer / EPDM	
208	Diaphragm		1	Textile reinforced elastomer / CR	
209	Upper diaphragm holder**:	DN50XG to 150XG	1	Cast iron/EN-GJL-250	EN 1561
		DN200XG to 300XG		Ductile iron/EN-GJS-450-10	EN 1563
		DN150XGS to 200XGS		Cast iron/EN-GJL-250	EN 1561
		DN250XGS to 400XGS		Ductile iron/EN-GJS-450-10	EN 1563
210	Guide bushing		1	Bronze / CuSn12	EN 1982
211	Drain plug		1	Stainless Steel 316L/ X2CrNiMo17-12-2	EN 10088
212	Spring		1	Stainless Steel 302 / X10CrNi18-08	EN 10088
213	Stop ring		1	Stainless Steel 302 / X10CrNi18-08	EN 10088
214	Indicator stem		1	Stainless Steel 321 / X6CrNiTi18-10	EN 10088
14	Visual position indicator		1	Copper-alloy+Glass+Elastomer / CuZn39Pb3+Glass+EPDM	EN 12164
	O-ring		acc/DN	Elastomer / EPDM	
	Bolting and washers		acc/DN	Stainless Steel A2	EN 10088
Pilot circuit					
1	Upstream isolating valve		1	Nickel plated Copper-alloy	
2	Strainer		1	Bronze+Copper-alloy+Stainless Steel	
3	Small orifice plate / Restrictor		1	Stainless Steel 303 / X8CrNiS18-9	EN 10088
7	Downstream isolating valve		1	Nickel plated Copper-alloy	
9	Chamber isolating valve		1	Nickel plated Copper-alloy	
10.1	Opening speed controller		1	Copper-alloy+Stainless Steel+EPDM	
51	3/8'' Pressure reducing pilot valve		1	See details opposite	
BL	Chamber feed box / Combi bloc		1	Bronze / CuSn12	EN 1982
250	Pilot circuit tube		acc/DN	Stainless Steel 316L/ X2CrNiMo17-12-2	EN 10088
	Pilot circuit fittings***		acc/DN	Stainless Steel 316L/ X2CrNiMo17-12-2	EN 10088
	Isolating valve for pressure gauges***		2	Nickel plated Copper-alloy	

Drawing and part list for DN 50XG to 300XG and DN 150XGS to 400XGS. Other DN, please consult us.
** Blue epoxy coating.*
*** Epoxy cataphoresis coating + blue epoxy coating.*
**** Non represented (pressure gauges optional).*

The technical data and performance can be modified without prior notice depending on the technical evolution.

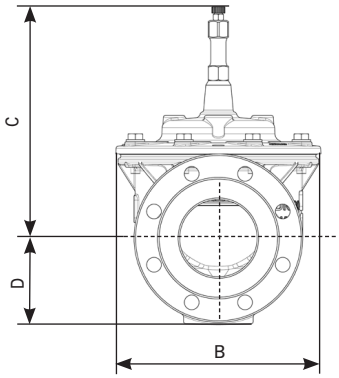

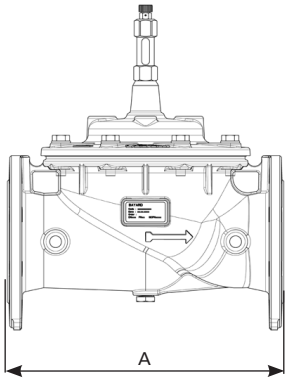

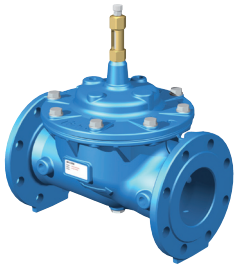

Globe pattern.
Single Chamber.
XG and XGS design
from DN 350.

Globe pattern.
Single Chamber.
XGS design
until DN 300.

DN	A	XGS design B**	XGS design C***	XGS design D	XGS design Weight	XG design B**	XG design C***	XG design D	XG design Weight
	mm	mm	mm	mm	kg	mm	mm	mm	kg
50*	230	-	-	-	-	173	238	84.5	14.2
65*	290	-	-	-	-	198	257	94.5	18.7
80*	310	-	-	-	-	226	277	102	22.6
100	350	-	-	-	-	265	302	120	35.1
125	400	-	-	-	-	307	396	137	42.7
150	480	265	302	140	43.2	351	443	152	67.9
200	600	351	443	182	80.8	436	567	182	116.8
250	730	436	580	212	134.9	524	609	212	156.7
300	850	524	631	242	193.3	606	657	242	219.0
350	980	606	657	278	249.3	-	-	-	-
400	1100	606	657	312	270.4	835	847	355	540.0
500	1250	835	847	367	600.0	-	-	-	-
600	1450	835	847	422.5	717	1085	1229	422.5	1205.0
700	1650	1085	1229	480	1421	-	-	-	-

** Double drilling on DN 50. 65. 80 ISO PN16 flanges. respectively 40/50. 60/65. 80-4/8 holes. Simple drilling. please consult us.*
**** Add 100 mm on both sides to B for pilot circuit dimension on standard product. pressure gauges excluded (other construction. please consult us).*
**** Add 150 mm to C for pilot circuit height on standard product (other construction. please consult us).*

3/8'' pressure reducing pilot valve

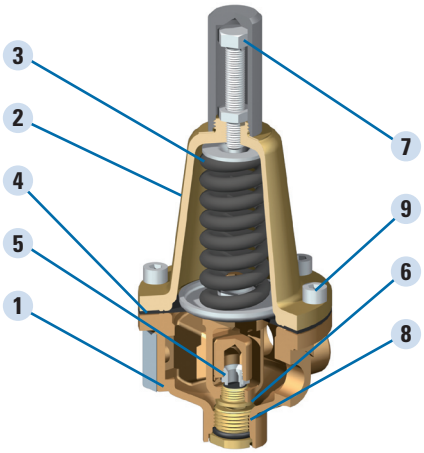

Item	Designation	Qty	Materials	Standards
1	Body	1	Bronze/CuSn5Pb5Zn5	EN 1982
2	Bonnet	1	Copper-alloy/CuZn39Pb1A1	EN 1982
3	Spring: 1 to 20 bar	1	Steel/CrSi	DIN 17223
	0.2 to 2 bar*		Stainless steel 302/X10CrNi18-08	EN 10088
	15 to 25 bar*		Steel/CrSi	DIN17223
4	Diaphragm	1	Textile reinforced elastomer/EPDM	
5	Seat	1	Steel/X2CrNiMo17-12-2	EN 10088
6	Valve holder+valve disc	1	Bronze/CuSn12 + Viton	EN 1982
7	Setting screw	1	Stainless steel/X2CrNi18-09	EN10088
8	Lower guide	1	Bronze/CuSn12	EN 1982
9	Screw	6/8	Stainless steel/X2CrNi18-09	EN 10088

** Special requirement*
Drawing and part list for 3/8'' pressure reducing pilot valve. Other sizes, please consult us.

The technical data and performance can be modified
without prior notice depending on the technical evolution.

Operating principle

- Please refer to the general manual on Hydrobloc control valves (series K) for performances, operating principle, and options available for the products.
- **Pressure reducing function:**
  When the downstream pressure increases, above the set value, the pilot valve (item 51) tends to close which operates closing of the main valve. On the contrary, when the downstream pressure decreases, below the set value, the pilot valve (item 51) tends to open, which operates opening of the main valve.

The main valve copies the movement of the pilot valve.

- **Performances:**
  - The operating principle guaranties a very accurate control of the downstream pressure: generally ± 5% of the set value within the recommended flow range (see table below).
  - With clean water, the valve is watertight at zero flow rate for a downstream pressure less than 1 bar higher than the set value.
- If the inlet pressure drops close to the set value, the Hydrostab fully opens thus creating a very low head loss.

Standard regulation curves (XGS and XG design)

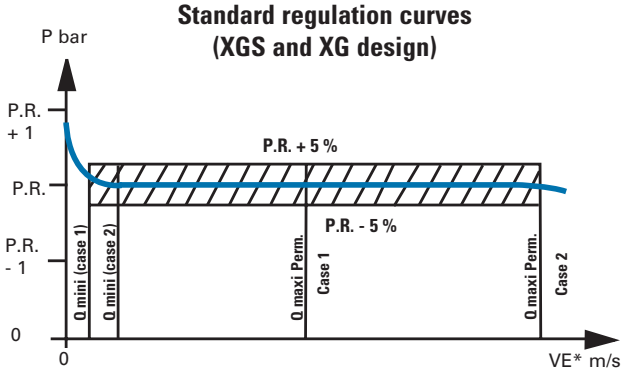

Sizing of the hydrobloc

How to choose the design

Up from DN150 the Bayard range offers two different versions: XG and XGS design. The decision which design to take depends on the required application and on the pressure and flow rate conditions.

- The XGS design specially fits for a pressure reducing application and when there is a risk of cavitation.
- The XG design suits better for low head loss conditions.

Recommended velocity (VE*)

	XGS design m/s	XG design m/s
Permanent maxi velocity	4	5
Exceptional maxi velocity	6	7

How to choose the diameter

The diameter of the valve must be chosen according to the flow rate and pressure conditions on the valves. Generally two cases are to be considered.

Case 1:

At the maximum flow (during peak hours or high consumption periods), if the upstream pressure drops close to the downstream pressure set value (difference < 1 bar), we advise to «oversize» the valve. A maximum equivalent speed (VE) of 2 m/s is recommended for XGS design, and 2.5 m/s for XG design. At this speed the minimum pressure drop of the open main valve is:

- Between 3 and 5 mWH for XGS design (depending on the DN),
- Between 2 and 3 mWH for XG design (depending on the DN).

Case 2:

At the maximum flow, if the upstream pressure is important compared to the downstream pressure set value (high available head loss), then higher velocities can be admitted (beforehand check that the available head loss is higher than the head loss through the fully open valve at the maxi considered flow rate):

- 4 m/s for permanent maxi velocity, and 6 m/s for exceptional maxi velocity on XGS design,
- 5 m/s for permanent maxi velocity, and 7 m/s for exceptional maxi velocity on XG design.

Minimum flow rate:

For flow rates lower than those we recommend, downstream pressure accuracy can exceed the ± 5 % tolerance of the set value.

When a device may have to operate below the minimum flow rate value (see table below) for long periods of time (irrigation networks, staggered projects, etc…), we strongly recommend the installation of a second smaller diameter device in parallel. The maximum flow for the small device would correspond to the minimum flow for the larger device, and the smaller device would be set at a pressure 0.5 bar above that of the larger device.

Recommended flow rates (l/s)

		VE*/ DN	50	65	80	100	125	150	200	250	300	350	400	500	600	700	800	900	1000
Case 1	Mini flow rate	**0.2**	-	-	-	-	-	3.5	6.3	9.8	14	19	25	39	57	77	-	127	157
XGS Design	Maxi permanent flow rate	**2**	-	-	-	-	-	35	63	98	141	192	251	393	565	770	-	1272	1571
Case 2	Mini flow rate	**0.4**	-	-	-	-	-	7.1	13	20	28	38	50	79	113	154	-	254	314
	Maxi permanent flow rate	**4**	-	-	-	-	-	71	126	196	283	385	503	785	1131	1539	-	2545	3142
Case 1	Mini flow rate	**0.2**	0.4	0.7	1	1.6	2.5	3.5	6.3	9.8	14	-	25	-	57	-	101	-	-
XG Design	Maxi permanent flow rate	**2.5**	4.9	8.3	13	20	31	44	79	123	177	-	314	-	707	-	1257	-	-
Case 2	Mini flow rate	**0.4**	0.8	1.3	2	3.1	4.9	7.1	13	20	28	-	50	-	113	-	201	-	-
	Maxi permanent flow rate	**5**	9.8	17	25	39	61	88	157	245	353	-	628	-	1414	-	2513	-	-

** VE (m/s) = Equivalent velocity: average velocity in the inlet section (DN) .*

The technical data and performance can be modified without prior notice depending on the technical evolution.

Cavitation

It is recommended to use the cavitation diagram which is included in the general manual for Hydrobloc control valves (series K) in order to check for safe operation area.

Adjustment ranges

The following table shows the adjustment range in function of the diameter (DN) and the type of pilot.

DN		Pilot	Springs adjustment range
XGS design	XG design		
150 to 400	50 to 300	3/8"	1 to 20 bar - standard
			0.2 to 2 bar - on request
			15 to 25 bar - on request
500 to 700	400 to 600	3/4"	1 to 20 bar - standard
			0.2 to 2 bar - on request

Installation

- Installation and maintenance manual delivered with the product, and available if necessary on request.
- Installation should be carried out as shown in the general manual for Hydrobloc control valves (series K). In the case of a parallel installation, the by-pass should include the same components than the main line.
  Install an air valve; upstream the pressure reducing valve if the pipeline is horizontal, or slopes upwards; and downstream the device if the pipeline slopes downwards.
- The pressure-reducing valve is a control valve. If the downstream networks includes fragile components (old pipes or devices, elements with maximum working pressure close to set value of downstream pressure…), install a safety relief valve («DJET» relief valve, «HYDROSTAB» surge valve…).
- Sand presence can spoil seat components at zero flow rate, with a risk of loss of water tightness. Thus, we recommend the installation of a small safety relief valve downstream the pressure-reducing valve. Please, consult us.
- The manhole must be sufficient spacious and accessible to allow easy checking of the pressure gauges (optional) and position indicator, as well as maintenance operations. Required minimum space (to adapt in function of the valve diameter):
  - All around the device and above: 1 m,
  - Below the device: 0.20 m.
- The manhole must be fitted with draining or water evacuation facilities.
- The pressure difference between the upstream and downstream creates a thrust which can be quite powerful. Therefore, in order to ensure no movement of the valve and pipeline, it is necessary then to install a chocking device.

Maintenance

Please refer to installation and maintenance manual delivered with the product.

Particular applications

For the options available with the main valve or the pilot circuit, check the general manual for Hydrobloc control valves (series K).
Please contact us for specific applications, mentioning the conditions of use (upstream and downstream pressures, minimum and maximum flow rates, height and level of the reservoir, type and conditions of installation, required functions, etc.).

BELGICAST is a company of

TALIS

Belgicast

Check valves and strainers

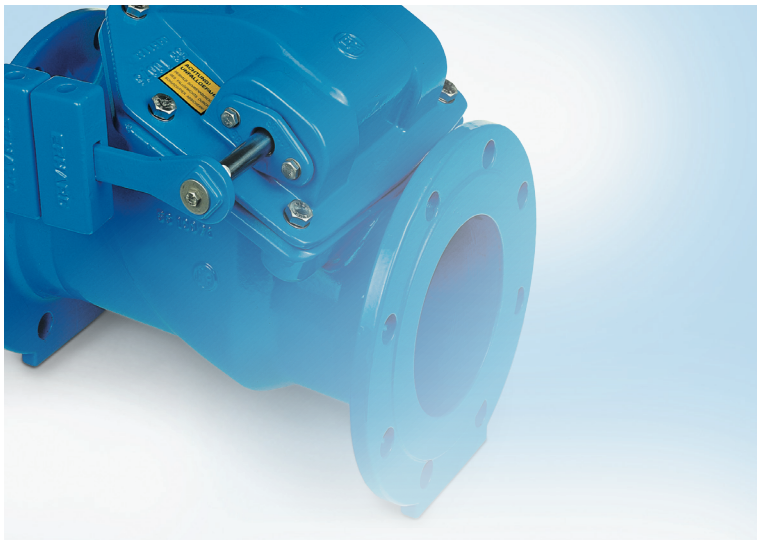

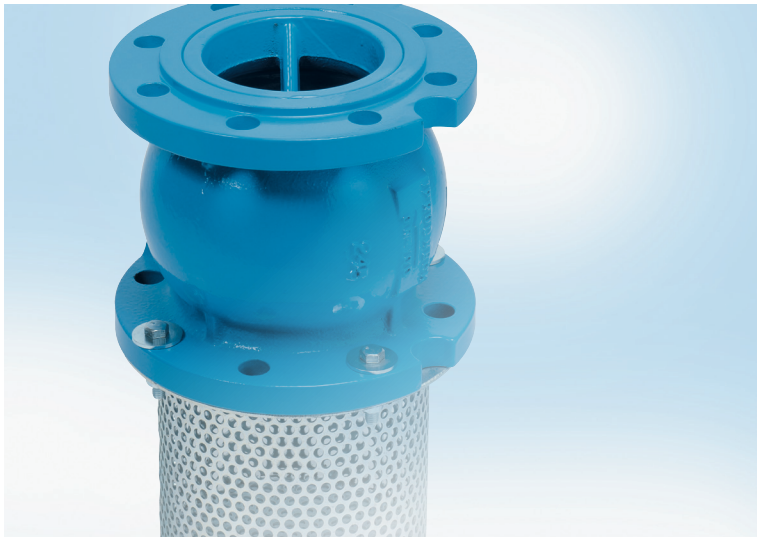

TALIS – the number one choice for all valve-related products.

TALIS is the major brand whenever products and services are needed for the water cycle. The brands ATLANTIC PLASTICS, BAYARD, BELGICAST, ERHARD, FRISCHHUT, SCHMIEDING, STRATE, UNIJOINT and WAFREGA are united under this name to provide a unique comprehensive service that provides the best solution for every application. Our global experience and the in-depth knowledge of our employees are the basis for TALIS' innovative strength. In our quest for new sustainable solutions, we regularly set new milestones in valve technology. And have been doing so for more than 100 years.

Our main focus is always on increasing efficiency in handling the resource water, on a long service life and economic feasibility.

TALIS products meet the most stringent quality standards and are certified all over the world.

TALIS

YOUR CHOICE IN WATERFLOW CONTROL

Belgicast

Manufacturing Program

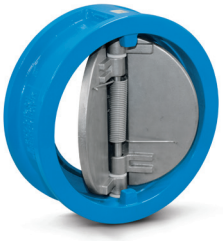

4 Dual Plate Check Valves
Model C and B

4 Dual Plate Check Valves
Duplex for Desalination

7 Dual Plate Check Valves
Model EMG

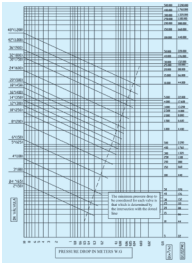

9 Dual Plate Check Valves
Hydraulic data

10 Ball Check Valves
BV-05-38

12 Iprocheck
BV-05-92

14 Swing check valve
B6 50

16 "Y" strainer
BC-03-20

17 Strainer box
MP type

19 Installation instructions

DN 40 - 1200 / PN 10 - 250

Dual Plate Check Valves

Operation

The plates of the check valve open when for example the pump is started and immediately close again when the pump is switched off. This closure is only driven by the hydrostatic pressure and the reset force of the spring. The check valve can be installed vertically and horizontally making it a flexible solution for different applications.

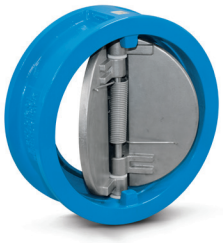

Model C

Features

Short face to face distance according to ISO 5752, Series16, and DIN 3202 K3
Valid for installation between flanges PN10, PN16, PN25, PN40 or ANSI-150.
Maximun working pressure 40 bar.
For higher pressures, our dual plate model B is available.
Minimum back pressure to ensure water tightness 0,5 bar.

Wafer version as standard, flanged type upon request.
Quick and silent closing.
Versions in cast iron and welded steel protected with epoxy powder coating .
Maximum working temperature according to material selection.
See pages 18 and 19 for correct installation.

Model B

Features

Face to face distance according to API-594.
Rating class 150/1500 or PN 10/250
Maximum working pressure 250 bar.
Minimum back pressure to ensure water tightness 0,5 bar.

Wafer version as standard, flanged type upon request.
Quick and silent closing .
Versions in welded steel protected with epoxy powder coating .
Maximum working temperature according to material selection.
See pages 18 and 19 for correct installation.

Materials

Body: GG-25*, GGG-40*, ASTM A216 Gr WCB, CF-8M
Plates: GGG-40*, ASTM A216 Gr WCB, CF-8M, Al-br
Shafts: AISI-304, AISI-316, Monel 400
Springs: AISI-302, AISI-316, Inconel 750X
Liner: EPDM, BUNA-N, Heat EPDM, Viton.
*Body and plates in cast iron only available for model C
Other materials upon request.

BELGICAST dual plate check valves are a perfect choice for **desalination plants** since they are available with body and plates made of duplex stainless steel according to DIN 14469, material extremely resistant both to corrosion and abrasion, with a PREN value higher than 40.
Body: Duplex DIN14469 A 890 5A
Plates: Duplex DIN14469 A 890 5A
Shafts: 254 SMO
Springs: Inconel 625
Liner: EPDM

Belgicast

Dimensions Model C

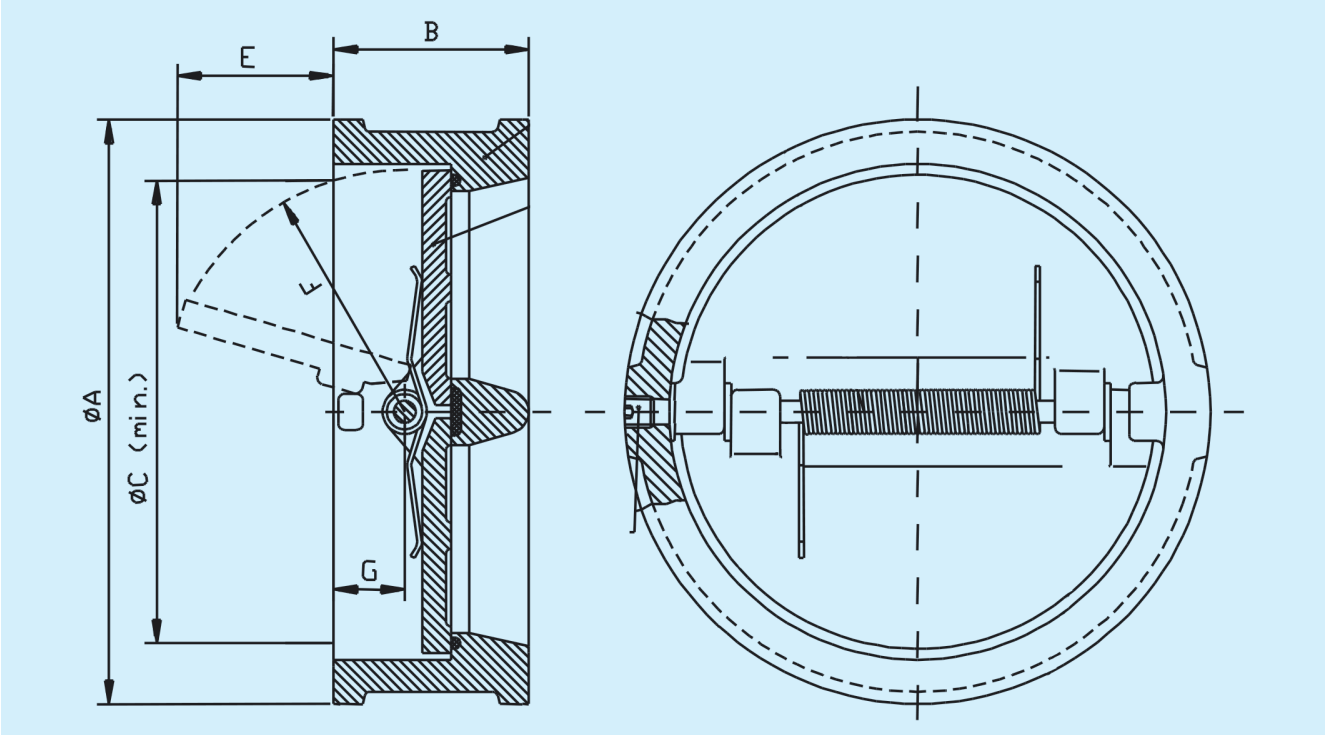

DN		A					B					C					E	F	G	WEIGHT (kg) PN10/16	WEIGHT (kg) PN25
mm	"	PN 10	PN 16	ANSI 125/150*	PN25	PN 40	PN 10	PN 16	ANSI 125/150	PN25	PN40	PN 10	PN 16	ANSI 125/150	PN25	PN40					
40	1½	94		-	94	94	43**					55					12	33	21	1	1
50	2	108		104	108	108	43					55					12	33	21	1.3	1.3
65	2½	128		124	128	--	46					58,5					12	33	18,7	2.4	2.4
80	3	143		136	143	143	64					71					18	41	30,8	3.2	3.2
100	4	163		169	169	169	64					96					28	52	30,2	4.2	4.2
125	5	194		194	194	194	70					125					35	70	30,3	7	7
150	6	219		219	224	224	76					128					33	70	37	9	9
200	8	275		275	284	293	89					192					60	104	36	15	15
250	10	329		338	338	355	114					244					81	126	48	27	27
300	12	380		408	402	419	114					295					100	153	49	34	34
350	14	440		450	458	***	127				***	320				***	108	168	57	55	55
400	16	490		514	514	***	140				***	380				***	137	195	58	70	70
450	18	540	556	543	***	***	152			***		420			***		152	217	65	100	***
500	20	595	618	605	***	***	152			***		480			***		175	247	65	120	***
600	24	696	735	716	***	***	178			***		585			***		222	299	77	180	***
700	28	810	810	830	***	***	229			***		690			***		250	352	103	260	***
800	32	915	915	937	***	***	241			***		780			***		290	395	107	350	***
900	36	1015	1015	1046	***	***	241			***		850			***		332	445	112	520	***
1000	40	1124	1124	1216	***	***	300			***		940			***		332	483	152	760	***
1200	48	1340	1340	1380	***	***	350			***		1150			***		442	601	159	1200	***

*Only for installation between flanges

**Figure not according to ISO 5752

*** Model B available, dimensions on page 6

Dual Plate Check Valves

Dimensions Model B

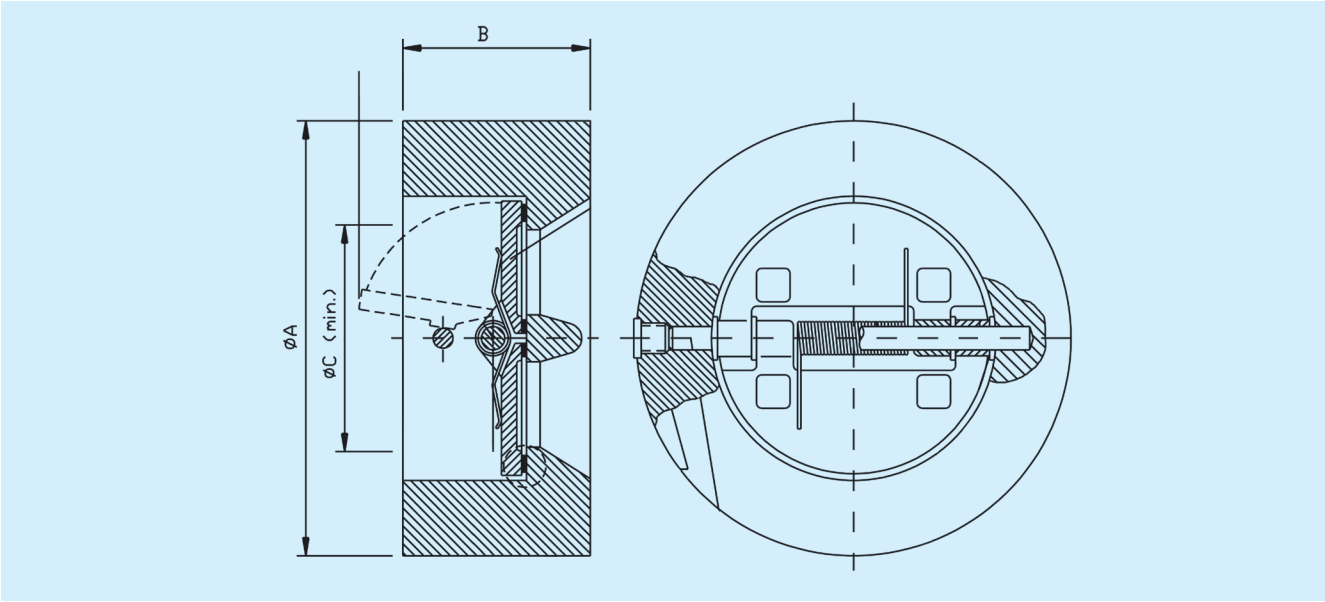

DN		CLASS 150			CLASS 300			PN 10			PN 16			PN 25			PN 40		
mm	"	A	B	C	A	B	C	A	B	C	A	B	C	A	B	C	A	B	C
50	2	104	60	28	108	60	28	108	60	28	108	60	28	108	60	28	108	60	28
65	2 1/2	124	67	-	128	67	-	128	67	-	128	67	-	128	67	-	128	67	-
80	3	136	73	40	143	73	40	143	73	40	143	73	40	143	73	40	143	73	40
100	4	169	73	88	179	73	88	163	73	88	163	73	88	169	73	88	169	73	88
125	5	194	83	110	215	86	110	194	83	110	194	83	110	194	83	110	194	83	110
150	6	219	98	112	248	98	112	219	98	112	219	98	112	224	98	112	224	98	112
200	8	275	127	175	306	127	175	275	127	175	275	127	175	284	127	175	293	127	175
250	10	338	146	210	360	146	210	329	146	210	329	146	210	338	146	210	355	146	210
300	12	408	181	270	419	181	270	380	181	270	380	181	270	402	181	270	419	181	270
350	14	450	184	300	484	222	320	440	184	300	440	184	300	460	184	300	476	222	320
400	16	514	191	372	538	232	370	490	191	372	495	191	372	514	191	372	548	232	370
450	18	548	203	416	595	264	430	540	203	416	556	203	416	565	203	416	572	264	430
500	20	605	219	560	652	292	460	595	219	560	618	219	560	625	219	560	630	292	460
600	24	716	222	580	772	318	550	696	222	580	735	222	580	733	222	580	748	318	550
*700	28	830	282	640	895	370	680	810	282	640	810	282	640	834	282	640	853	370	680
750	30	880	305	662	950	370	720	-	-	-	-	-	-	-	-	-	-	-	-
*800	32	937	305	750	1000	420	770	915	305	750	915	305	750	942	305	750	974	420	770
900	36	1046	368	830	1115	480	880	1015	368	830	1015	368	830	1042	368	830	1084	480	880
1000	40	-	-	-	-	-	-	1124	431	890	1124	431	890	1154	431	890	1194	540	995
1200	48	1380	524	1145	1486	630	1190	1340	524	1145	1340	524	1145	1364	524	1145	1400	630	1190

DN		CLASS 600			CLASS 900			CLASS 1500			PN 64			PN 100			PN 160			PN 250		
mm	"	A	B	C	A	B	C	A	B	C	A	B	C	A	B	C	A	B	C	A	B	C
50	2	108	60	28	140	70	-	140	70	-	114	60	28	120	60	28	120	70	-	136	70	-
65	2 1/2	128	67	-	162	83	-	162	83	-	138	67	-	146	67	-	144	83	-	154	83	-
80	3	146	73	40	166	83	60	172	83	60	149	73	50	155	73	50	154	83	60	172	83	60
100	4	190	80	88	203	102	80	208	102	80	175	80	88	182	80	88	181	102	80	202	102	80
150	6	265	137	105	286	159	130	280	159	130	248	137	105	258	137	105	258	159	130	285	159	130
200	8	318	165	180	356	206	170	350	206	170	310	165	180	325	165	180	325	206	170	360	206	170
250	10	397	213	230	432	241	210	432	247	210	356	213	230	390	213	230	390	241	210	442	247	210
300	12	455	229	280	496	292	260	518	305	255	425	229	280	460	229	280	458	292	260	540	305	255
350	14	490	273	315	518	356	290	575	356	290	487	273	315	512	273	315	-	-	-	-	-	-
400	16	562	305	360	572	384	320	640	384	320	544	305	360	572	305	360	-	-	-	-	-	-
450	18	610	362	402	636	451	400	702	468	400	588	362	402	628	362	402	-	-	-	-	-	-
500	20	680	368	450	696	451	420	754	533	420	658	368	450	706	368	450	-	-	-	-	-	-
600	24	788	438	540	836	495	540	900	559	540	766	438	540	818	438	540	-	-	-	-	-	-

Belgicast

DN 40 - 300 / PN 10 - 16

Dual Plate Check Valves

EMG Model

Features

Short face to face distance according to DIN 3202 K3
Centering lugs valid for installation between flanges PN6, PN10, PN16, ANSI-150, BS Table E/D, JIS 5K/10K.
Maximum working pressure 16 bar.
For higher pressures, our dual plate model C and model B are available.
Minimum back pressure to ensure water tightness 0,5 bar
Internal fully lined body with NBR or EPDM.
No flange gasket required.
Casette type internal parts, allowing easy replacement (plates, shaft and springs)
Quick and silent closing
No external holes or plugs in the body.
Protected with blue epoxy powder coating
Maximum working temperature according to material selection
See pages 18 and 19 for correct installation.

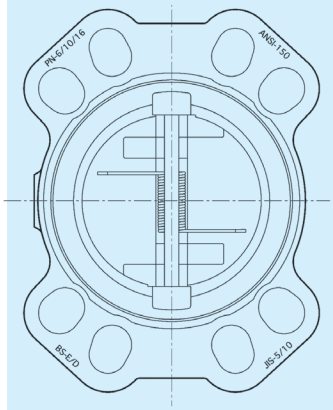

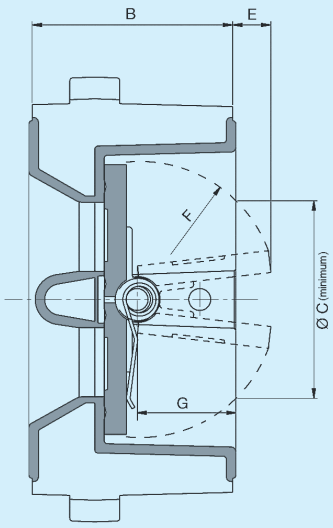

Materials

Code	Body	Plates	Shafts	Springs	Keys	Liner
105	GG-25	AISI-316	AISI-304	AISI-302	AISI-316	NBR
701	GG-25	AISI-316	AISI-304	AISI-302	AISI-316	EPDM
177	GGG-40	AISI-316	AISI-304	AISI-302	AISI-316	NBR
718	GGG-40	AISI-316	AISI-304	AISI-302	AISI-316	EPDM

Note: Codes 177 and 718 from DN40 to DN65
Codes 105 and 701 from DN80 to DN300
Other materials upon request

Dimensions

DN (mm)	DN (inch)	B	C	E	F	G
40	1 1/2	33	43	8	23,5	15
50	2	43	49	10	29	21
65	2 1/2	46	64	14	35,5	22
80	3	64	70	11	42	30
100	4	64	91	21	51,5	30
125	5	70	125	38	66	32
150	6	76	148	47	77	32
200	8	89	200	64	101	35
250	10	114	240	78	129	48
300	12	114	300	103	158	50

Dual Plate Check Valves

Rubber liner and applications

MATERIAL	ISO	CHEMICAL NAME		WORKING TEMP. (°C)
EPDM	EPDM	Ethylene-Propylene Terpolymer	Water, weak mineral acids and basis, water ketones, esters	−10° +80°
EPDM-HT			High temperature	−10° +130°
			Normative FDA	−20° +130°
NITRILE	NBR	Acrylonitrile-Butadiene Copolymer	Oils, Greases, Fuel, Gas oil, CO_2, CO, H_2	−10° +80°
HYPALON	CSM	Chlorosulfonated Polyethylene	Moderate resistance to oil, greases and weak acids	−20° +120°
VITON	FPM	Hexafluorpropylene vinylidene fluoride copolymer	Best chemical resistence	−15° +200°
		HFP-VDF-TFE terpolymer	Oxygenated Gasoline	−5° +70°
NATURAL	NR	1,4 cis Polyisoprene	Very good abrasion resistance	−15° +70°
SILICONE	MVQ	Poly methyl vinyl siloxane	Highest and lowest temperature resistance	−60° +200°
STEAM SILICONE			Steam water	−60° +140°

Guidance information provided by rubber suppliers.
Final performance of the rubber will depend on media composition.

Pressure drop

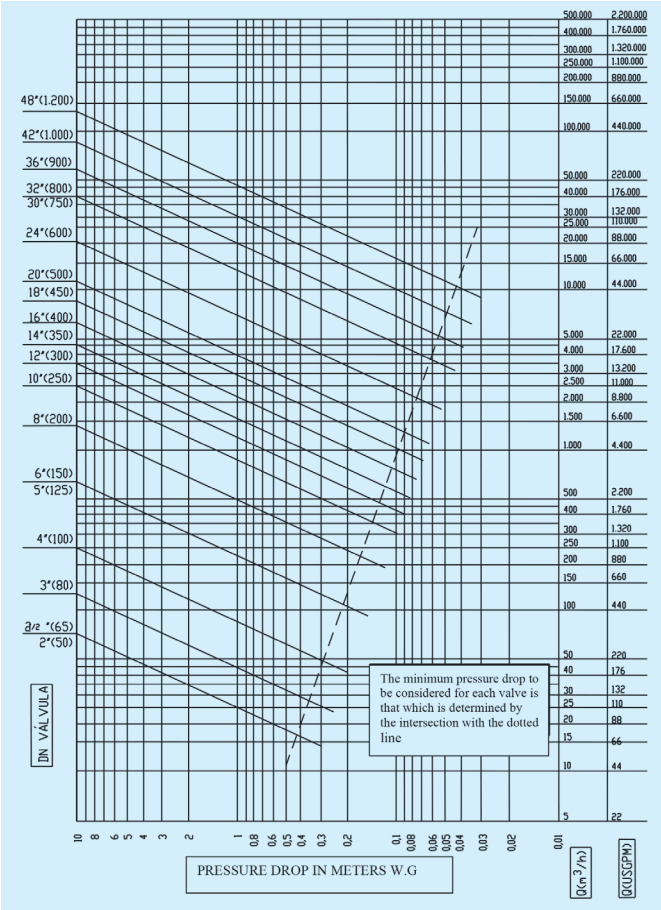

DN mm	DN "	CV	KV m³/sg	mm water column spring action
40	11/2	90	0.0215	300
50	2	90	0.0215	300
65	21/2	90	0.0215	300
80	3	150	0.0359	300
100	4	300	0.0718	200
125	5	800	0.19157	150
150	6	800	0.19157	150
200	8	1700	0.4070	140
250	10	3000	0.7183	140
300	12	4000	0.9578	130
350	14	5350	1.2811	130
400	16	7400	1.772	100
450	18	10000	2.394	70
500	20	13000	3.113	70
600	24	24000	5.747	60
700	28	40000	9.578	60
800	32	45500	10.895	50
900	36	62000	14.846	50
1000	40	90000	21.551	40
1200	48	130000	31.130	30

SHAFT ON VERTICAL POSITION

PRESSURE DROP WITH STANDARD SPRING

DN	50	65	80	100	125	150	200	250	300	350	400	450	500	600	700	800	900	1000	1200
KV	0,0215	0,0215	0,0359	0,0718	0,19157	0,19157	0,407	0,7183	0,9578	1,2811	1,772	2,394	3,113	5,747	9,578	10,895	14,846	21,551	31,13
Standard Spring	0,3	0,3	0,3	0,2	0,15	0,15	0,14	0,14	0,13	0,13	0,1	0,07	0,07	0,06	0,06	0,05	0,05	0,04	0,03
Flow m³/s	0	0	0	0	0	0	0	0	0	0	0	0	0	0	0	0	0	0	0
Density	1	1	1	1	1	1	1	1	1	1	1	1	1	1	1	1	1	1	1
ΔP mm.W.c.	300	300	300	200	150	150	140	140	130	130	100	70	70	60	60	50	50	40	30

PRESSURE DROP WITH LOW TORQUE SPRING

DN	50	65	80	100	125	150	200	250	300	350	400	450	500	600	700	800	900	1000	1200
KV	0,0215	0,0215	0,0359	0,0718	0,19157	0,19157	0,407	0,7183	0,9578	1,2811	1,772	2,394	3,113	5,747	9,578	10,895	14,846	21,551	31,13
Low Torque Spring	0,21	0,21	0,21	0,14	0,105	0,105	0,098	0,098	0,091	0,091	0,07	0,049	0,049	0,042	0,042	0,035	0,035	0,028	0,021
Flow m³/s	0	0	0	0	0	0	0	0	0	0	0	0	0	0	0	0	0	0	0
Density	1	1	1	1	1	1	1	1	1	1	1	1	1	1	1	1	1	1	1
ΔP mm.W.c.	210	210	210	140	105	105	98	98	91	91	70	49	49	42	42	35	35	28	21

PRESSURE DROP WITH HIGH TORQUE SPRING

DN	50	65	80	100	125	150	200	250	300	350	400	450	500	600	700	800	900	1000	1200
KV	0,0215	0,0215	0,0359	0,0718	0,19157	0,19157	0,407	0,7183	0,9578	1,2811	1,772	2,394	3,113	5,747	9,578	10,895	14,846	21,551	31,13
High Torque Spring	0,39	0,39	0,39	0,26	0,195	0,195	0,182	0,182	0,169	0,169	0,13	0,091	0,091	0,078	0,078	0,065	0,065	0,052	0,039
Flow m³/s	0	0	0	0	0	0	0	0	0	0	0	0	0	0	0	0	0	0	0
Density	1	1	1	1	1	1	1	1	1	1	1	1	1	1	1	1	1	1	1
ΔP mm.W.c.	390	390	390	260	195	195	182	182	169	169	130	91	91	78	78	65	65	52	39

MINIMAL PRESSURE TO OPEN

DN	50	65	80	100	125	150	200	250	300	350	400	450	500	600	700	800	900	1000	1200
Standard Spring																			
ΔP mm.W.c.	300	300	300	200	150	150	140	140	130	130	100	70	70	60	60	50	50	40	30
Low Torque Spring																			
ΔP mm.W.c.	210	210	210	140	105	105	98	98	91	91	70	49	49	42	42	35	35	28	21
High Torque Spring																			
ΔP mm.W.c.	390	390	390	260	195	195	182	182	169	169	130	91	91	78	78	65	65	52	39

THIS TABLE IS APPLICABLE AS LONG AS THE FLOW RATE IS BELOW THE CRITICAL VALUE, i. e.: $\Delta P < F_L^2 (P_1 - P_V)$

F_L^2.....0,65 (Pressure-drop factor)

P_1.....Pressure at the valve inlet

P_V.....Vapour pressure of the liquid

DN 25 - 400 / PN 10 - 16

Ball Check Valves - BV-05-38

Flanged and threaded type

Features:

Maximum working pressure 16 bar up to DN200,bigger sizes 10 bar.
Valid for installation between PN10 or PN16 flanges or BSP thread.
Temperature from -10ºC to +80ºC
Minimum differential pressure to ensure water tightness 0,5 bar.
Full bore.
Easy maintenance.
Anti-corrosion epoxy coating.

Operation:

Operation is based on a free ball housed inside the body which is pushed by the pumped flow to the side cavity, allowing the liquid to pass through. When the pump stops and the ball is no longer pushed aside, it takes up a position in the inlet port and prevents flow return.

Ball check valve specially designed for pumping waste water.
It can also be used with clean water because of its low headloss.

Pressure drop:

Flanged type

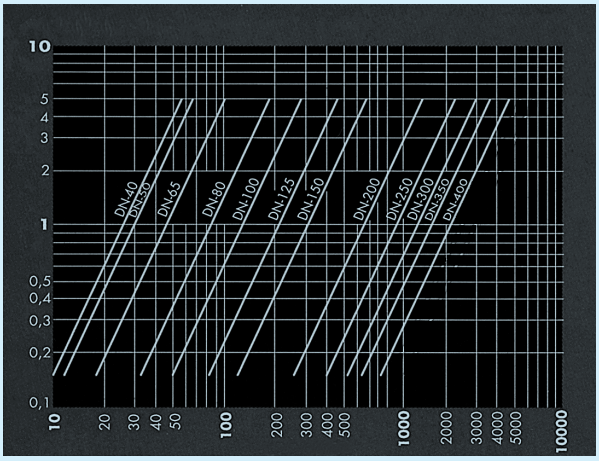

Threaded type

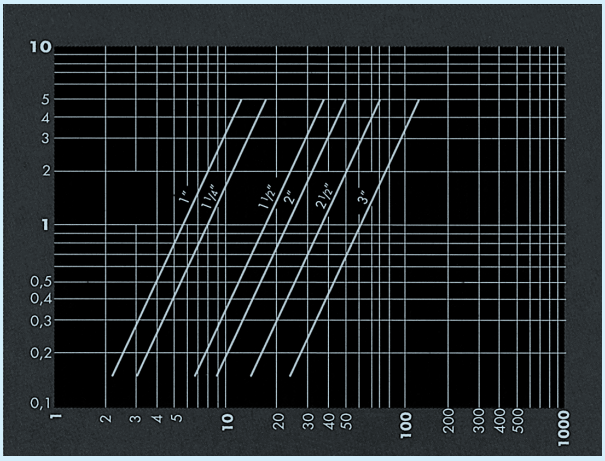

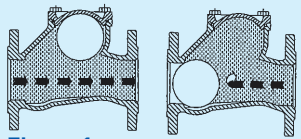

Figure 1

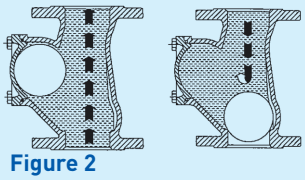

Figure 2

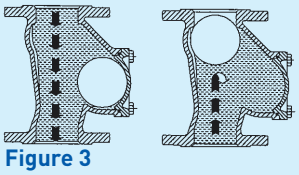

Figure 3

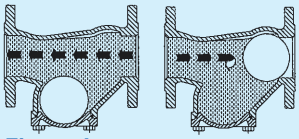

Figure 4

Internal ball types:

Ball check valves may also be supplied with balls of lower weight depending on particular requirements.
Floating balls may be supplied on request for the following models to work as a dual-purpose vent (air admission and discharge):

- Flanged type: ND-80 to ND-200
- Threaded type: ND 40 to ND 65

Installation:

May be fitted horizontally or vertically.

- Horizontal flow
  Valves to be installed with cover at the top, as figure 1
- Vertical flow upwards
  Valves to be installed as figure 2
- Floating ball-check valves
  Ball check valves can be fitted as an air valve (vertically installed) or to prevent used water from flowing back. In this case, valves can be installed in either horizontal or vertical pipes, but they must always be fitted as shown in figure 3 for upward vertical flow and according to figure 4 for horizontal flow.

Belgicast

Ball Check Valves - BV-05-38

Materials and dimensions

Flanged type

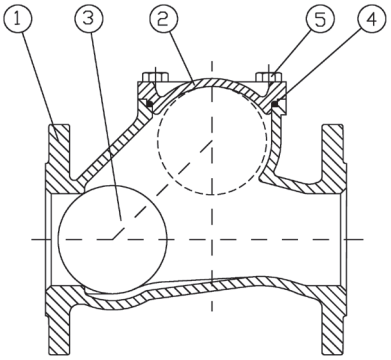

Nº	NAME	Nº OF PARTS	MATERIAL
1	BODY	1	GGG-40
2	BALL	1	DN 40/200 ALUMINIUM+NITRYL DN 250/400 GGG-40+NITRYL
3	BONNET	1	GGG-40
4	BODY BONNET GASKET	1	NITRILE
5	BOLTS	ACC/DN	STAINLESS STEEL

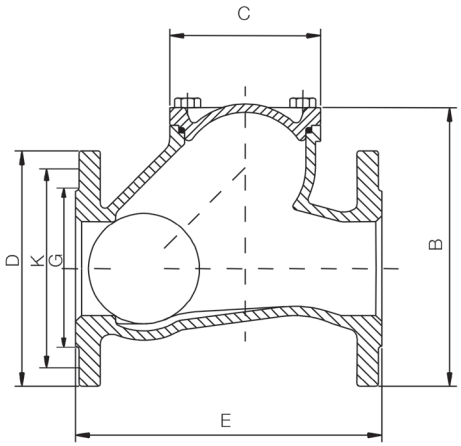

DN		ISO 2531 PN-10				E	C	B	KVo m3/h	Weight Kg
mm	"	D	K	G	nºxd					
40	11/2	150	110	88	4x19	180	95	172	80	7,5
50	2	165	125	102	4x19	200	95	180	90	8,5
65	21/2	185	145	122	4x19	240	114	210	140	12
80	3	200	160	138	8x19	260	128	240	253	15
100	4	220	180	158	8x19	300	160	285	396	22
125	5	250	210	188	8x23	350	200	330	642	34
150	6	285	240	212	8x23	400	230	390	962	45
200	8	340	295	268	8x28	500	320	480	1990	80
250	10	400	350	320	12x28	600	414	600	3100	135
300	12	450	400	370	12x28	700	460	680	4100	200
350	14	505	460	430	16x28	850	596	800	5050	300
400	16	565	515	482	16x28	1100	690	1050	6500	600

Threaded type

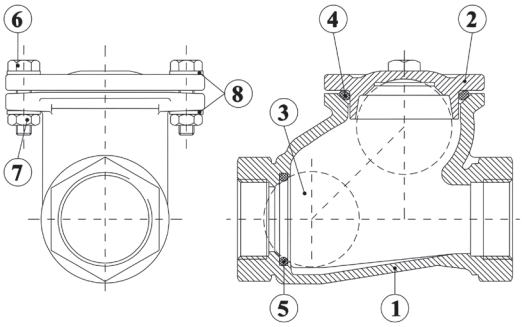

Nº	NAME	Nº OF PARTS	MATERIAL
1	BODY	1	GGG-40
2	BONNET	1	GGG-40
3	BALL	1	PHENOLIC RESIN
4	BODY BONNET GASKET	1	NITRILE
5	SEAT GASKET	1	NITRILE
6	SCREW	2	STAINLESS STEEL
7	NUT	2	STAINLESS STEEL
8	WASHERS	4	STAINLESS STEEL

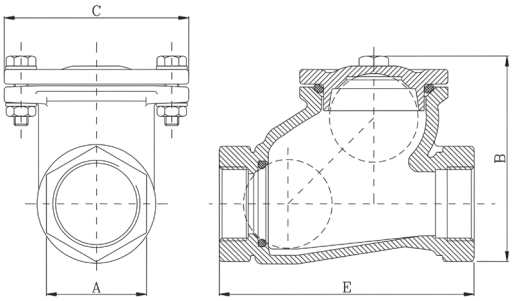

DN		A	B	C	E	KVo m3/h	Weight Kg
mm	inch						
25*	1	45	92	96	120	18	1,9
32	1¼	50	105	106	135	32	2,4
40	1½	60	115	112	142	58	2,8
50	2	70	155	136	175	75	3,7
65	2½	90	170	155	198	118	6,3
80*	3	105	197	180	238	185	7,6

*Valves without bonnet. Drawing upon request.

DN 50 - 250 / PN 10 - 16

Iprocheck - BV-05-92

Axial disc foot valve

Features:

Axial disc check valve for protection and non-return on pumping equipment for either clean or/and filter water.
High hydraulic performance.
Minimum back pressure to ensure water tightness 0,5 bar for valves up to DN150, bigger sizes 1 bar.
Silent operation.
May be fitted in horizontal or vertical position.
Excellent water hammer performance.
Temperature from -10°C to +80°C.
Anti-corrosion epoxy protection.
Easy maintenance

Strainer is supplied upon request. Standard material of the strainer is zinc coated, upon request in stainless steel.
The strainer basket protects pumping equipment against the entry of foreign objects capable of damaging impellers and other pump components.

Operation:

When the pumping equipment is in operation, the disc is pushed back allowing the fluid to flow. When the pump stops, the disc is quickly closed by spring pressure before any overpressure occurs due to the return flow.

Pressure drop:

Iprocheck

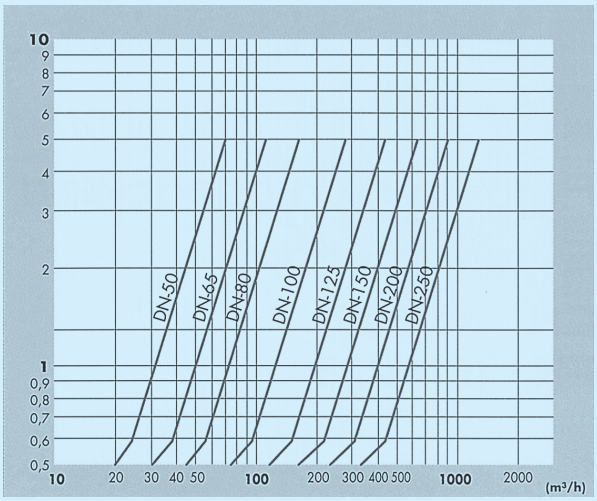

Iprocheck with strainer

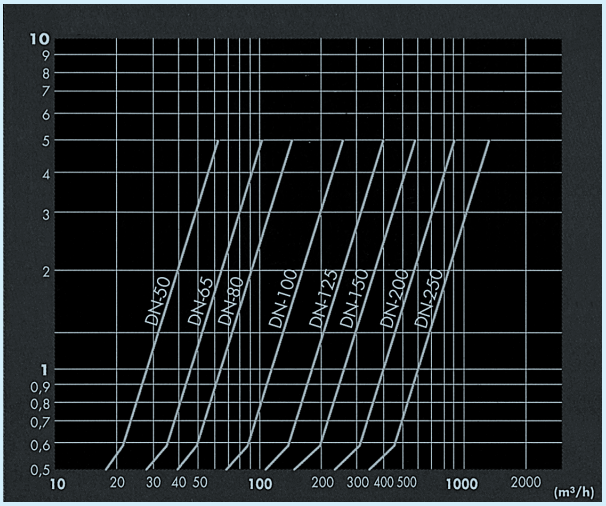

Belgicast

Iprocheck - BV-05-92

Materials and dimensions

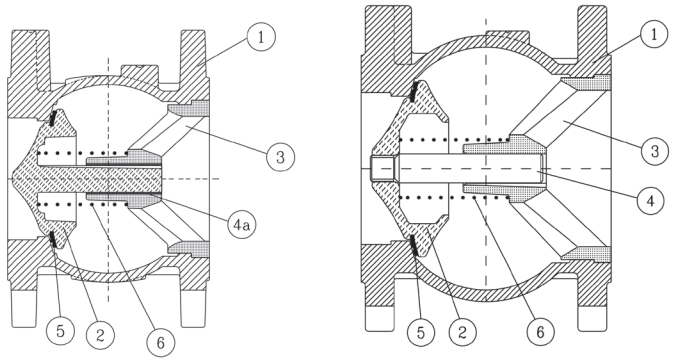

Nº	NAME	Nº OF PARTS	MATERIAL
1	BODY	1	GG-25
2	WEDGE	1	GG-25
3	GUIDE	1	GG-25
4	STEM	1	AISI 303
4a	BUSH	2	DN 50/80 NYLON 6-52Mo DN 100/150 ST. STEEL AISI 300 DN 200/250 BRONZE
5	SEALING GASKET	2	EPDM
6	SPRING	2	AISI 302
7	STRAINER	1	ZINC COATED STEEL or AISI 304

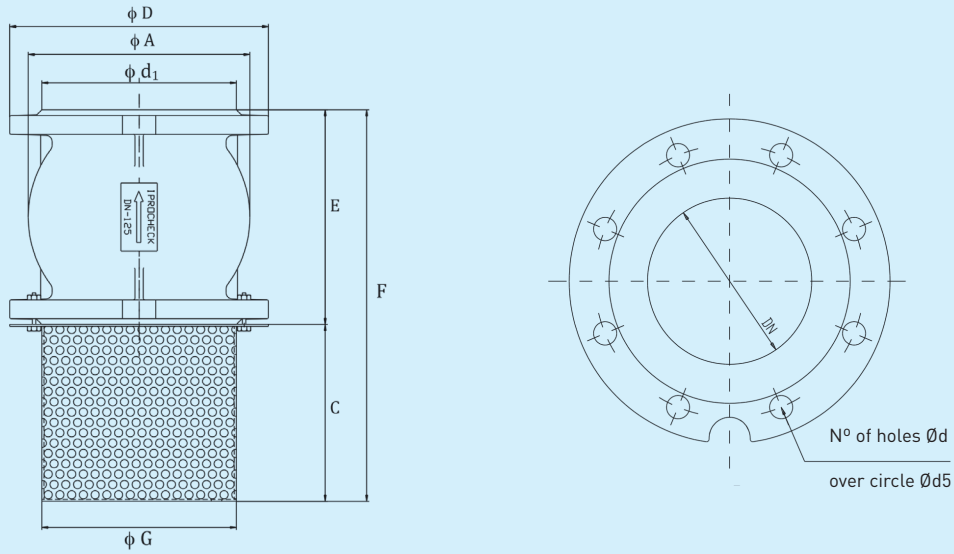

DN	PN-10		PN-16		A	C	D	E	F	G	d1	KVo m³/h	Valve Weight Kg	Basket Weight Kg
	d5	nºxd	d5	nºxd										
50	125	4x19	125	4x19	96	77	165	100	177	91	102	100	6	0,4
65	145	4x19	145	4x19	121	100	185	120	220	127	120	160	5,5	0,7
80	160	8x19	160	8x19	140	125	200	136	261	127	138	230	11,0	0,8
100	180	8x19	180	8x19	185	142	220	175	317	164	158	390	15,0	1
125	210	8x19	210	8x19	214	166	250	200	366	180	188	625	23,0	1,5
150	240	8x23	240	8x23	248	200	285	234	434	212	212	900	30,0	2,7
200	295	8x23	295	12x23	345	300	340	300	600	255	270	1100	48,5	3,5
250	350	12x23	355	12x27	415	380	405	370	750	330	320	1800	81,5	4,5

DN 40 - 400 / PN 10 - 16

Swing check valve - B6 50

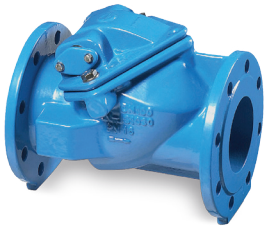

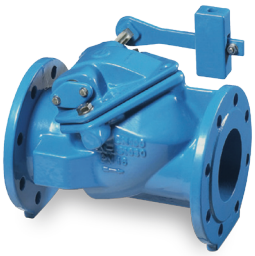

Features:

Maximum working pressure 16 bar up to DN300, bigger sizes 10 bar.
Maximum temperature: from 0ºC to +60ºC
Maximum speed: 3 m/s for PN10 and 4m/s for PN16
Seating: class A according to standard EN 12666-1.
Face-to-face dimensions according to EN 558-1 series 48 and ISO 5752 series 48.
Flange drilling according to standards EN 1092-2 and ISO 7005-2

Description:

Low headloss
Opening on low differential pressure
Stainless steel seat (except DN40)
Stainless steel shaft
Lubricated bearings
Removable bonnet for easy maintenance
Horizontal or upward vertical mounting
Weight-loaded lever upon request

Hydraulic features:

Measured curve of a swing check valve DN100 with weight-loaded lever, mounted on vertical pipe, for water at 20ºC. Thanks to geometric similarity, these values can be applied to other nominal diameters for approximate calculation. Please, consult us for exact values and data for other nominal diameters.

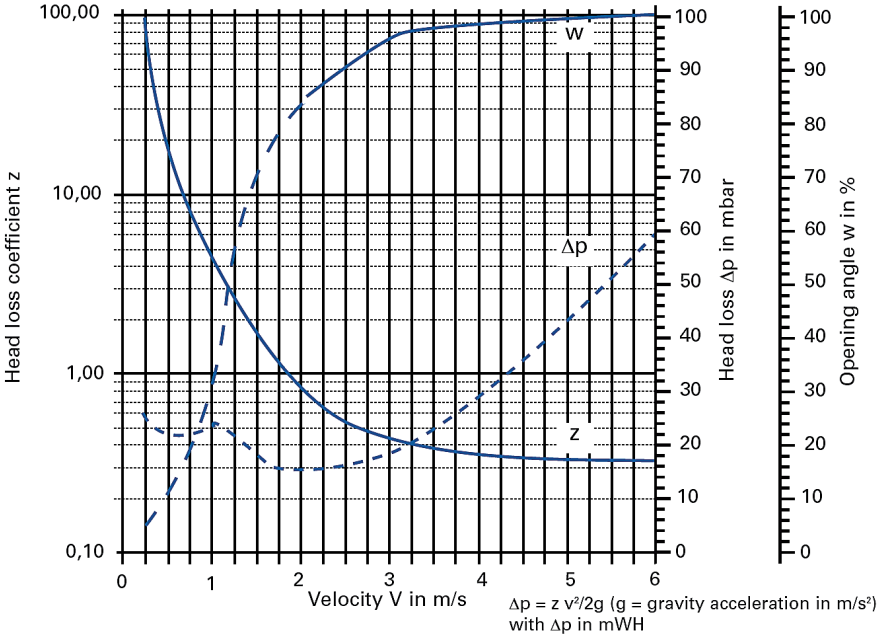

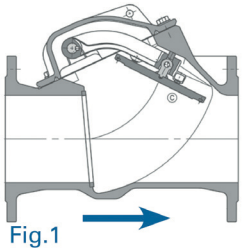

Fig.1

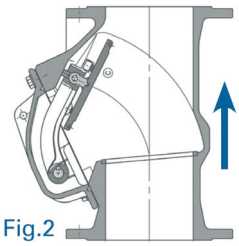

Fig.2

Installation:

In order to avoid accidents caused by the weight-loaded lever travel, install a protective guard system according to rules in force (see options).
The arrow indicates the flow direction, pumps in operation (same direction as that indicated on the swing check valve).
Horizontal installation (Fig. 1) or upward vertical installation (Fig. 2) possible. For swing check valves with weight-loaded lever, the weight must always assist (or help) the closing of the flap.

Belgicast

Swing check valve - B6 50

Materials and dimensions

Item	Designation	Qty	Materials	Standards
1	Body*	1	Ductile iron / EN-GJS-400-15	EN 1563
2	Seat	1	Stainless steel 420/ X30CN3	EN 10088
3	Centring pin	2	Stainless steel 316Tí / X6CrNiMoTi17-12-2	EN 10088
4	Bonnet*	1	Ductile iron / EN-GJS-400-15	EN 1563
5	Bearing	2	Copper alloy / CuZn39Pb3	EN 12165
6	O-ring	4	Elastomer/NBR	
7	O-ring	2	Elastomer / NBR	
8	Bush	2	Polyacetal / POM	
9	Shaft	1	Stainless steel 420 / X20Cr13	EN 10088
10	Clapper arm	1	Stainless steel CF-8/GX5CrNi19-10	EN 10283
11	Pin	1	Stainless steel 430F/ X14CrMoS17	EN 10088
12	Buffer	1	Elastomer / NBR	
13	Buffer	2	Elastomer / NBR	
14	Flap	1	Stainless steel 304/X5CrNi18-10	EN 10088
15	Resilient valve disc	1	Elastomer/NBR	
16	Blind flange*: without weight-loaded lever	2	Ductile iron/EN-GJS-400-15	EN 1563
	with weight-loaded lever	1	Ductile iron/EN-GJS-400-15	EN 1563
17	Washer	4	Stainless steel A2	EN 10088
18	Screw	4	Stainless steel A2	EN 10088
19	Washer	acc/DN	Stainless steel A2	EN 10088
20	Screw	acc/DN	Stainless steel A2	EN 10088
21	Body/bonnet gasket	1	Elastomer/NBR	

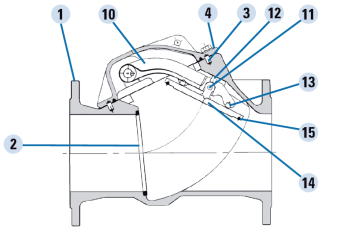

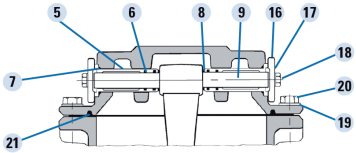

*Blue epoxy coating.

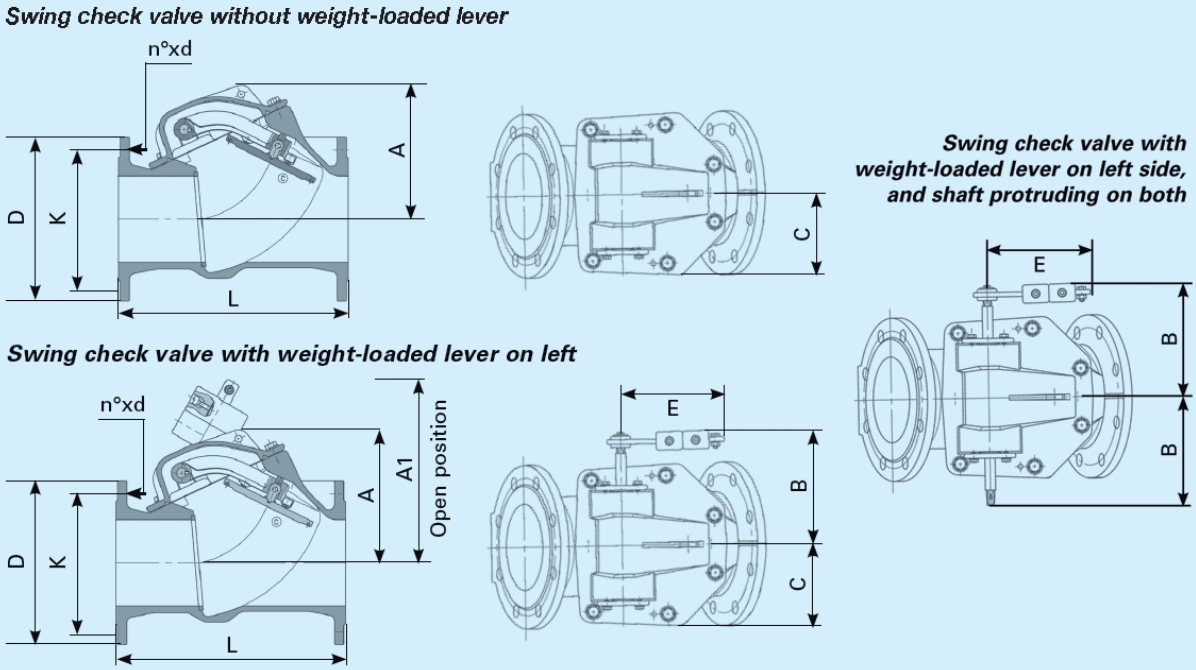

Drawings for DN 50 to 300, please consult us for other DN.

DN	D	ISO PN10 drilling K	ISO PN10 drilling n°xd	ISO PN16 drilling K	ISO PN16 drilling n°xd	L	A	A1	B	C	E	Weight W/O lever	Weight W/O lever	By-pass DN/ weight
	mm	mm		mm		mm	mm	mm	mm	mm	mm	kg	kg	mm/kg
40	150	110	4x19	110	4x19	180	115	-	-	-	-	8	-	-
50	165	125	4x19	125	4x19	200	105	226	131	74	170	10	12	-
65 drilled 60	185	135	4x19	135	4x19	240	105	226	131	74	180	12	14	-
65	185	145	4x19	145	4x19	240	105	226	131	74	180	12	14	-
80 drilled 4/8 holes	200	160	4x19+8x19	160	4x19+8x19	260	145	264	170	170	180	21	23	15/1.1
80	200	160	8x19	160	8x19	260	145	264	170	170	180	21	23	15/1.1
100	220	180	8x19	180	8x19	300	200	264	170	170	180	24	27	20/1.5
125	250	210	8x19	210	8x19	350	220	317	195	140	180	40	43	20/1.5
150	285	240	8x23	240	8x23	400	230	317	195	140	180	46	50	20/1.5
200	340	295	8x23	295	12x23	500	300	391	265	185	230	75	80	25/1.7
250	400	350	12x23	355	12x28	600	385	490	355	245	230	148	154	25/1.7
300	455	400	12x23	410	12x28	700	410	500	355	245	250	169	175	32/2.0
350	520	460	16x23	-	-	800	400	610	415	278	400	320	360	32/2.0
400	580	515	16x28	-	-	900	455	660	445	325	400	430	480	40/3.0

DN 40 - 400 / PN 10 - 16

“Y” strainer - BC-03-20

Features:

Maximum working pressure 16 bar up to DN300, bigger sizes 10 bar.
Face-to-face distance according to EN 558 series 1.
Flange connection according to ISO 70052 PN16.
Maximum working pressure 16 bar.
Simple strainer for network protection services.
Easy maintenance and installation.
Widely used in irrigation networks.
Anticorrosive epoxy coating.
Mesh hole dimension 1,6 mm

Material and dimensions

Item	Description	Material
1	Body	GG-25
2	Bonnet	GG-25
3	Screen	AISI-304
4	Body Bonnet gasket	EPDM
5	Bolting	Stainless Steel A2
6	Plug	Malleable iron

DN	L	D	K	G	f	b	dxnº	A	Ø Screen hole	Weight (kg)
40	200	150	125	102	3	19	19x4	107	1,6	6,4
50	230	165	125	102	3	19	19x4	116	1,6	7,9
65	290	185	145	122	3	19	19x4	141	1,6	11,5
80	310	200	160	138	3	19	19x8	162	1,6	13,5
100	350	220	180	158	3	19	19x8	192	1,6	17,6
125	400	250	210	188	3	19	19x8	244	1,6	26
150	480	285	240	212	3	19	23x8	277	1,6	37,5
200	600	340	295	268	3	20	23x12	348	1,6	62
250	730	405	355	319	3	22	28x12	433	1,6	122
300	850	460	410	370	4	24,5	28x12	477	1,6	160

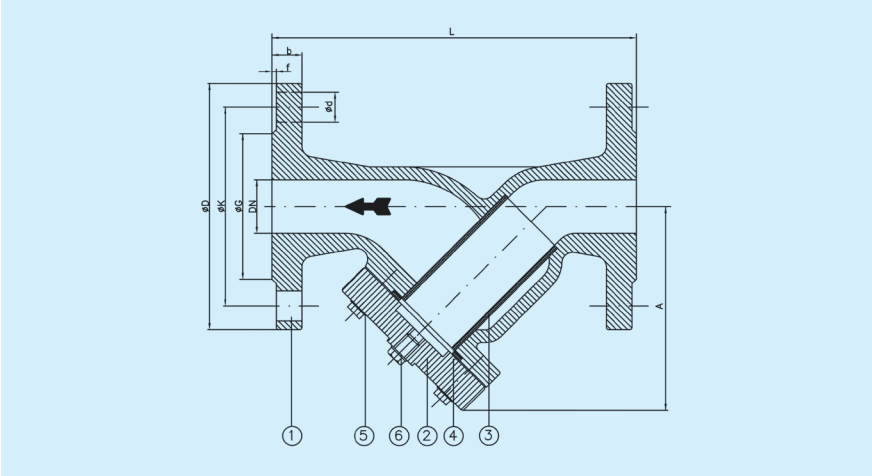

Belgicast

Strainer box - MP type

DN 40 - 400 / PN 10 - 16

Features:
Maximum working pressure 25 bar.
Maximum differential pressure 16 bar.
Flange drilling according to EN 1092-2 and ISO 7005-2: ISO PN10, 16 or 25.
Temperatures: +1ºC to +70ºC
Standard mesh: 2 mm (optional: 0,5 or 1mm, 8x8 mm).

Description:
Compact design.
Lateral drain plugs allowing installation of a drainage valve (upon request).
for maintenance without interrupting the water distribution supply.
Anticorrosive epoxy powder coating.
Easy dismantling of the bonnet and the screen from the top.
Widely used in drinking water and irrigation networks.

Hydraulic features:

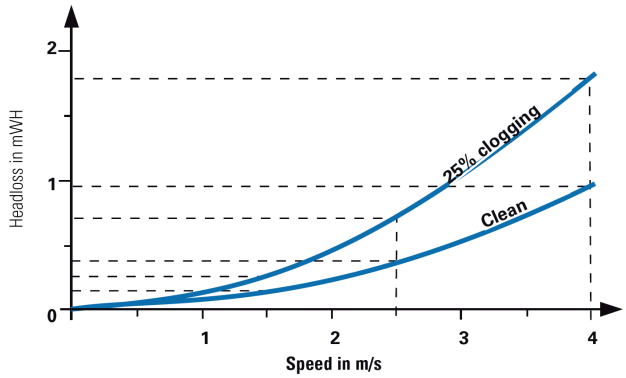

Headloss is low, even in case of partial clogging thanks to an important filtering section.

DN	A mm	B mm	C mm	D mm	Weight kg
50*	230	82	112	210	21
65**	230	88	112	210	23
80***	300	105	142	260	25,5
100	300	105	142	260	28,5
125	400	142	192	360	41,5
150	400	142	192	360	44,5
200	500	198	230	452	79,5
250	600	212	230	452	93

* Double drilling 50/40
** Double drilling 65/60
*** Loose flanges enable mounting on flanges 4 and 8 holes.

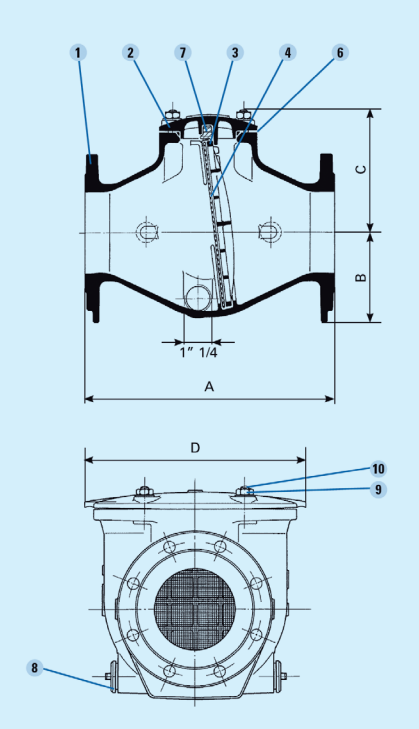

Item	Designation	Qty	Materials	Standards
1	Body	1	Ductile iron/ EN-GJS 450-10	EN 1563
2	Bonnet	1	Ductile iron/ EN-GJS 450-10	EN 1563
3	Screen holder	1	Ductile iron/ EN-GJS 450-10	EN 1563
4	Standard screen (2mm mesh)	1	Stainless steel 316L/X2CrNiMo 17-12-2	EN 10088
5	Optional screen*	1	Stainless steel 316L/X2CrNiMo 17-12-2	EN 10088
6	O-ring body/bonnet	1	Elastomer /EPDM	
7	Filter gasket	1	Elastomer /NBR	
8	Drain cap 1»1/4	2	Copper-alloy /CuZn39Pb2	EN 12164
9	Bolts	acc/DN	Galvanised steel	EN ISO 898
10	Studs	acc/DN	Stainless steel 303/X8CrNiS 18-9	EN 10088

*Mesh of 0.5 – 1 or 8x8 mm.

Technical information is valid for DN40-250 - Series F3 10. Drawing for bigger sizes upon request.

Installation and use instructions

Assembly in pipe

Wafer assembly: valves must be installed between pipe flanges with bolts or through studs, placing applicable gaskets between valve and flange faces. The valve body outside diameter is guided and centered by bolts or through studs used for valve mounting on pipe flanges.

Flanged type: bolts must be tightened gradually and diagonally following a pattern that ensures that none are completely tightened while the rest are completely loose.

Minimum pressure for tightness

For BELGICAST dual plate check valves and ball check valves the minimum pressure for tightness (backpressure on the plates/ball) is 0,5 bar (5 water column meters).

Mounting precautions

A proper performance of a check valve requires that the flow is as uniform as possible and that turbulence is minimized, to avoid that when the valve is opened, the plates can be opened and closed in rotation angle next to the total opening position, producing the rapid wear of the washers and the side faces of the hinges of the plates.

Check valves can be installed on horizontal or vertical pipes with upwards or downwards fluid flow, however the following precautions should be noticed:

Dual plate check valves

- **Horizontal flow**

Valves must be mounted with the disc rotation axis in vertical position, such that the discs seat on the support rings and have a balanced swing taking the same stress

- **Vertical flow upwards**

There is no definite position for the disk axis in this case, any direction being acceptable, selecting the most adequate direction depending on the pipe layout.

For this valve arrangement, the seat takes the disc weight, and an additional pressure drop takes place. In these cases and for diameters above 6", mounting low torque springs for counteracting the disk weight effect is recommended.

- **Vertical flow downwards**

Regarding the disc axis, the above stated applies.

For this valve arrangement, the disk weight is in the opening direction, and this must be known in advance to be able to mount high torque springs for valve diameters greater than 6".

Installation and use instructions

General installation precautions for check valves

A correct performance of a check valve requires that the flow is as uniform as possible and that turbulence is minimized, to avoid that when the valve is opened, the plates can be opened and closed in rotation angle next to the total opening position, producing the rapid wear of the washers and the side faces of the hinges of the plates.

Therefore it is very important to consider the following:

1) For valves with elastic seat, never weld next to the valve.
2) Never install the valve when flow is intermittent (pulsations).
3) If the valve is to be installed at a conical diffuser outlet, it must be adequately designed to avoid turbulence at the valve inlet. If it should be possible, off center diffusers with guiding vanes should be placed at diffuser outlet.
4) If the valve is to be installed at an elbow outlet, the same precautions as per above paragraph shall be taken.
5) When mounted on pump discharge side, valves must be installed as far as possible from diffusers and elbows, in a stable flow area, at a minimum distance of 5 times the valve nominal diameter.

For correct performance and to avoid premature wearing, it must be avoided to install this kind of valves in areas where the flow could be turbulent. In order to assure that the valve is working under stable flow conditions, it must be installed after a minimum straight pipe length of 5 times the DN of the valve from the pump of other elements which could provoke turbulences, such as cones, bends...

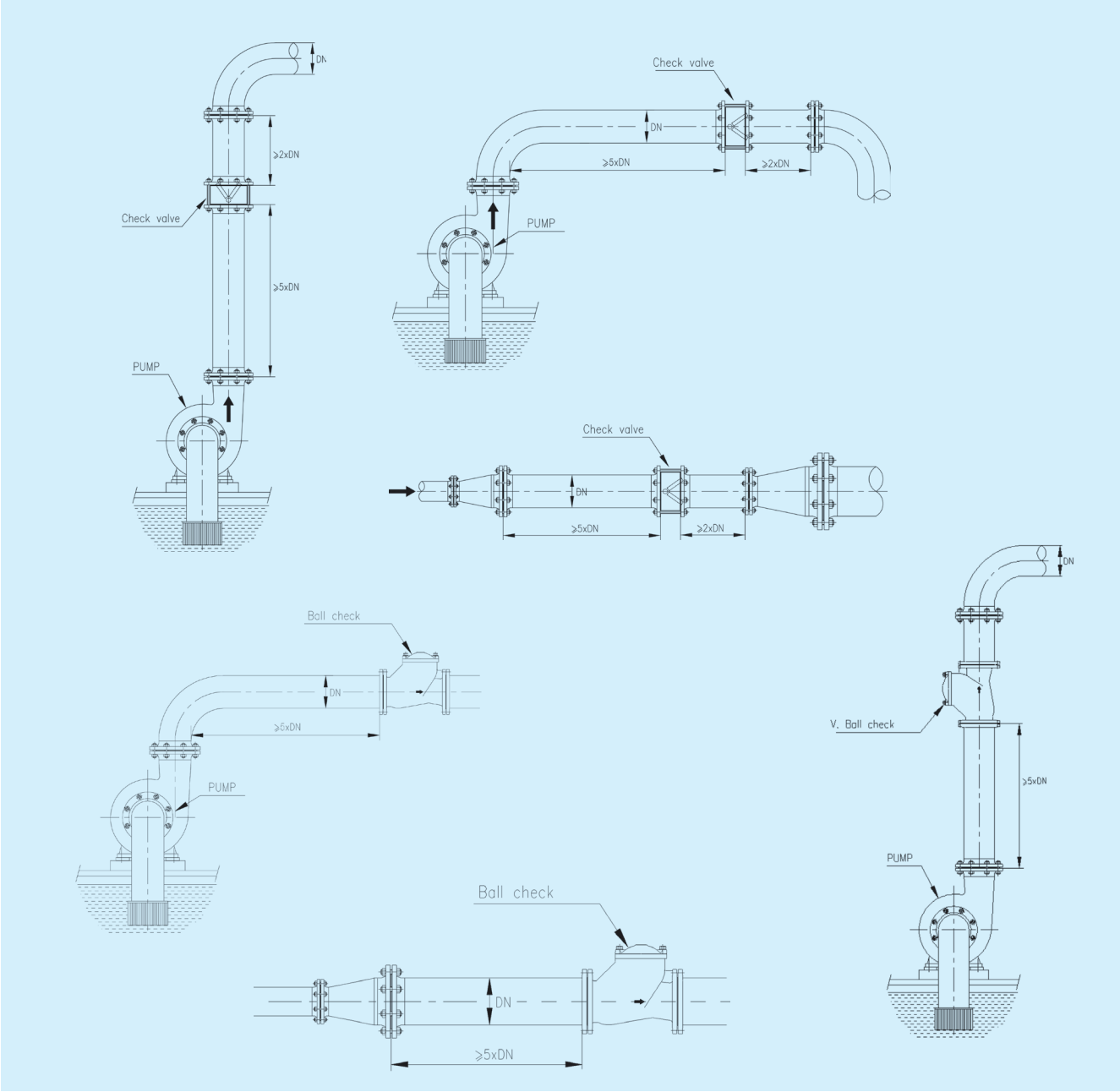

TALIS

Product Brochure

EVOLUTION Double Eccentric Butterfly Valve

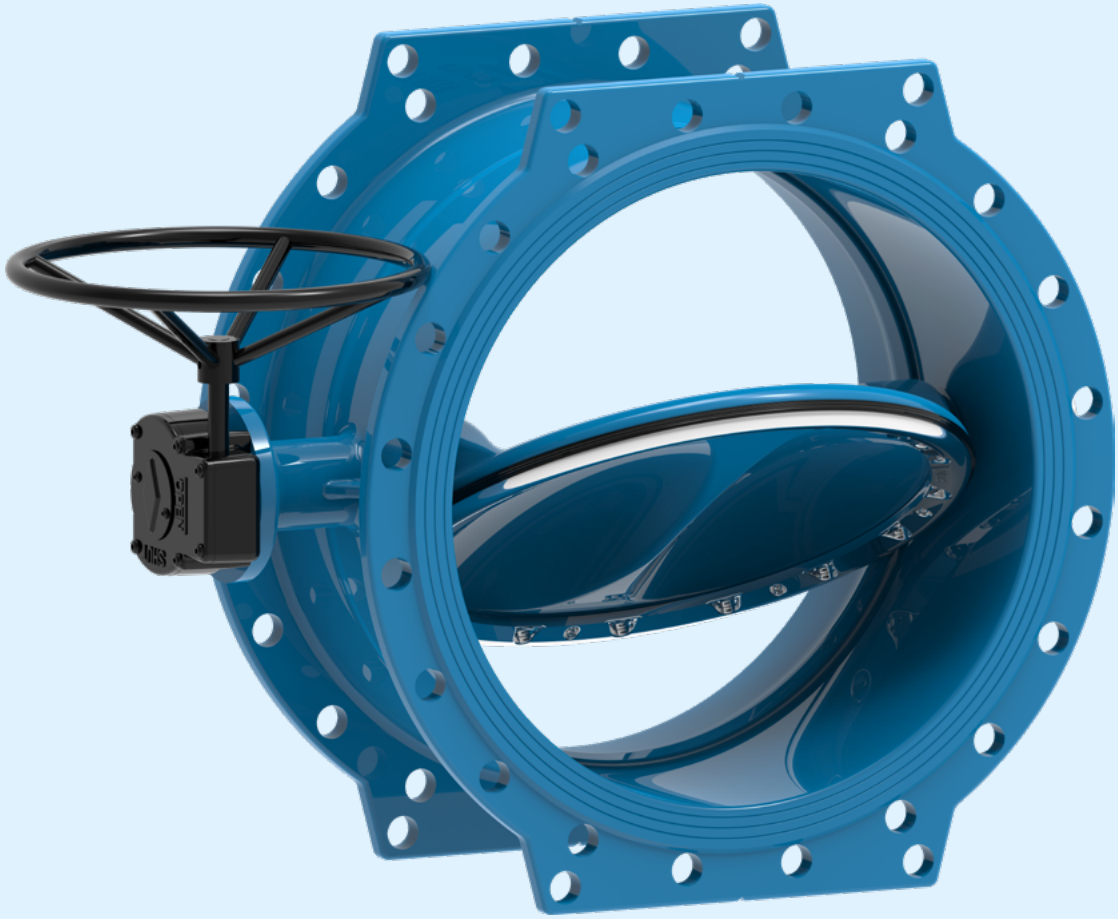

PBR_DBV200325_EVOLUTION_EN

DOUBLE ECCENTRIC BUTTERFLY VALVE

EVOLUTION

TALIS' new double eccentric butterfly valve represents the essence of an efficient butterfly valve designed for when economy is a high priority.

EVOLUTION is functional and reliable, providing reduced complexity.
It covers the needs in standard applications for drinking water in terms of design, materials and standards.

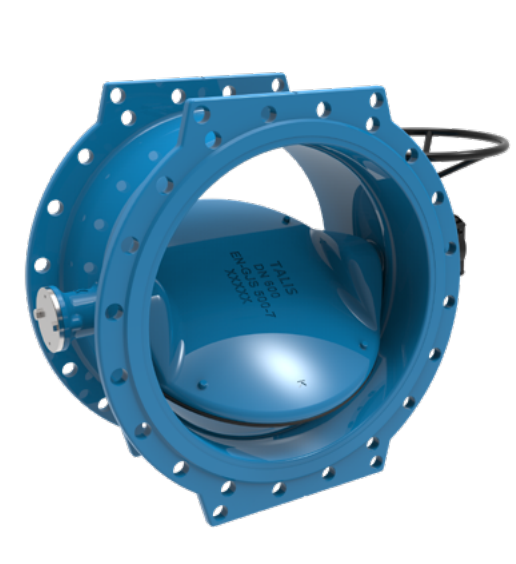

ADVANTAGES

- **ESSENTIAL:** Design and material selection are optimized for use in low and medium pressure drinking water applications.
- **DURABLE:** Uninterrupted corrosion protection with pin-less connection and closed disc eyes ensure long service life and clean water.
- **EFFICIENT:** Flow-efficient design for minimized head loss and low energy consumption significantly reduces the cost of ownership.

APPLICATIONS

Water treatment

Water distribution network

Water transmission

CHARACTERISTICS

- **Economic solution** providing all required features for standard drinking water applications.
- **Long service life** due to uninterrupted corrosion protection and high quality components.
- **Clean drinking water by using** certified high quality components
- **100% tested** according to EN 12266-1

APPROVALS

- WRAS, ACS, CNAS

TECHNICAL DATA

- **Nominal diameter (DN)**
  DN300 - DN1800
- **Nominal pressure (PN)**
  PN10 and PN16
- **Double eccentric butterfly valve** acc. to design standards EN 593 and EN1074-1/2
- **Face-to-face dimension** acc. to EN558 series 14
- **Flange Drilling** acc. to EN 1092-2
- **Medium** Drinking water
- **Temperature** min. -10°C, max. +50°C
- **Coating** Epoxy min. 250 µm
- **Actuation types**
  Handwheel with standard gearbox
  Prepared for electric actuation
  Adapted for pneumatic actuation
- **Gearbox enclosure** IP67 (optional IP68)

MAIN COMPONENTS

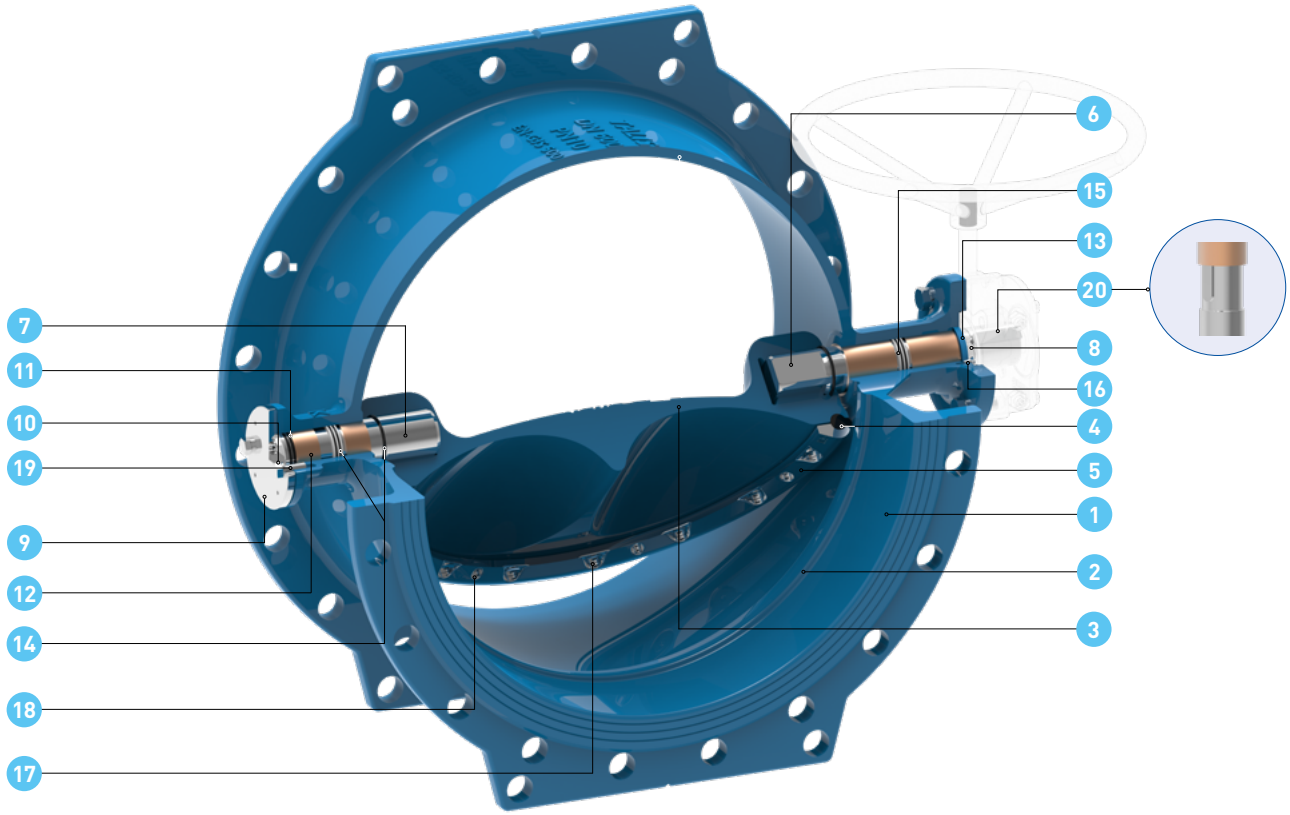

POS.	DESCRIPTION	MATERIAL - STANDARD	OPTIONAL	SPARE PART	WATER CONTACT
1	Body	EN-GJS-500-7, epoxy coated 250µm			x
2	Seat area	Integral, epoxy coated	Welded stainless steel AISI 309L		x
3	Disc	EN-GJS-500-7, epoxy coated 250µm			x
4	Sealing ring	EPDM	NBR	x	x
5	Retaining ring	CF8			x
6	Drive shaft	AISI 420			x
7	Shaft	AISI 420			x
8	Drive side cover	AISI 304			
9	End cover	AISI 304			
10	Spacer	AISI 304			
11	Washer	POM			
12	Bush	Self-lubricating steel + bronze PTFE coated			x
13	U-ring	NBR		x	
14	O-ring	EPDM	NBR	x	x
15	Washer	PTFE		x	x
16	Screws	A2			
17	Screws	A2			x
18	Set screws	A2			
19	Screws	A2			
20	Key	C45			

BENEFITS AND FEATURES

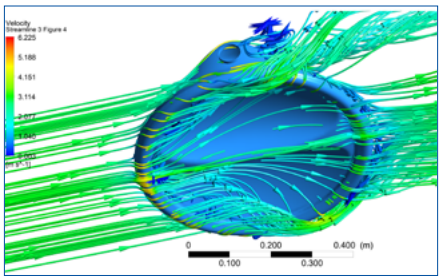

1: Flow-efficient design

- Disc design and inner body diameter are designed for maximum flow
- Low energy consumption due to minimized head loss
- **Reduced total cost of ownership**

2: Optoptimized for drinking water

- Materials in contact with water are **certified high quality**
- **WRAS approval** on components and full product
- Corrosion protection and stainless steel components ensure **clean water**

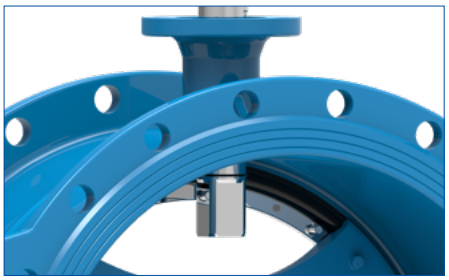

3: Uninterrupted corrosion protection

- Shaft-disc connection by means of a square shaft **without pins**
- Closed disc eyes
- 250 µm epoxy coating
- **Clean water** and **high durability**

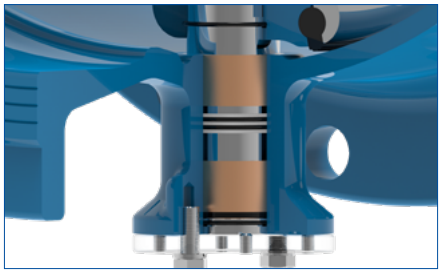

4: Adjustable disc position

- Lower cover design allows axial adjusting of disc position over time **for vertical installations**
- **Easy maintenance** without disassembling the valve

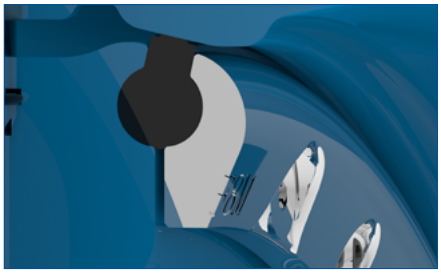

5: Low-wear sealing ring

- Saw-tooth profile for **self-sealing** effect and low friction
- Wearing is compensated by compressing the sealing ring over time
- **High durability**

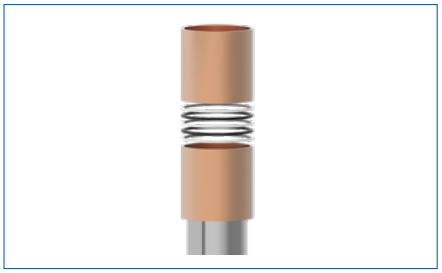

6: Self-lubricating bushes

- **Self-lubricating** bushes of steel + bronze
- PTFE coated
- Without lead
- **Maintenance-free**

ENERGY EFFICIENCY

EVOLUTION contributes to an overall optimized hydraulic system for a low consumption of energy.

Key figures are Kv and ζ (zeta) values:

- The Kv-factor of a valve indicates the water flow in m³/h at a pressure drop across the valve of 1 kg /cm2 at5-30°C when the valve is 100% open.
- The head loss coefficient ζ (zeta) or resistance coefficient is a dimensionless measure in fluid mechanics reflecting the resistance in a certain hydraulic element.
- High Kv factors and low zeta values mean reduced pressure losses and smaller pump capacities.

EVOLUTION valves minimize total cost of ownership

	PN10		PN16	
DN	Kv m³/h	ζ (zeta)	Kv m³/h	ζ (zeta)
300	5,138	0.49	5,291	0.46
400	10,371	0.38	10,238	0.39
450	13,302	0.37	13,302	0.37
500	16,649	0.36	15,639	0.41
600	27,684	0.27	25,509	0.32
700	40,826	0.23	33,778	0.34
800	55,806	0.21	44,118	0.34
900	60,260	0.23	58,068	0.25
1000	74,395	0.23	69,258	0.27
1200	111,503	0.22	105,928	0.24
1400	175,246	0.16	145,814	0.23
1600	217,147	0.18	207,041	0.20
1800	232,271	0.25	241,039	0.23

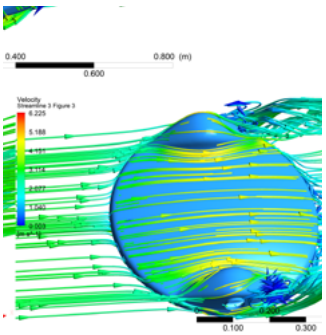

DIMENSIONS AND WEIGHTS

DOUBLE ECCENTRIC BUTTERFLY VALVE - EVOLUTION
WITH HANDWHEEL

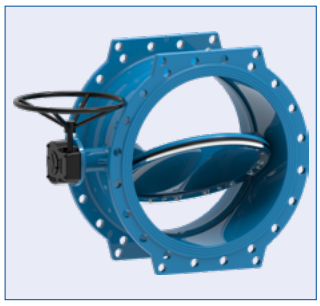

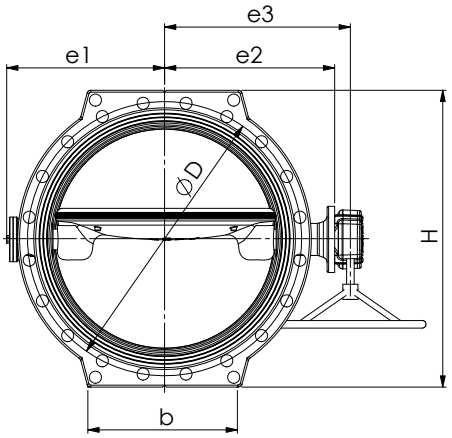

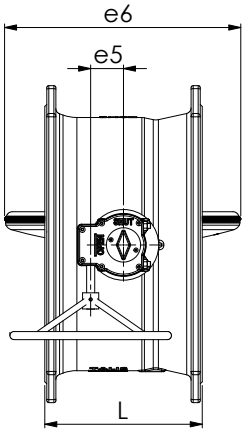

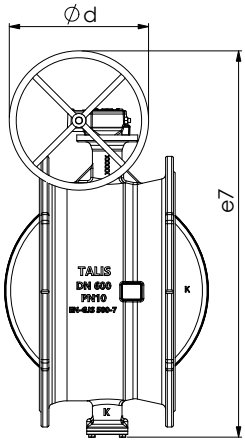

DN	PN	Weight	D	d	e1	e2	e3	L	e5	e6	e7	H	b
		kg	mm	mm	mm	mm	mm	mm	mm	mm	mm	mm	mm
300	10	61	400	300	235	270	298	270	55	280	658	445	150
	16	67	410	300	243	288	322	270	55	280	690	460	150
350	10	80	460	300	265	310	344	290	55	330	759	505	180
	16	88	470	300	272	315	349	290	55	330	771	520	180
400	10	102	515	300	295	340	374	310	55	375	819	565	200
	16	119	525	300	307	359	397	310	69	375	854	580	200
450	10	149	565	300	347	385	423	330	69	430	920	640	275
	16	149	585	300	347	385	423	330	69	430	920	640	275
500	10	161	620	400	350	410	452	350	69	480	977	670	368
	16	197	650	400	373	410	452	350	81	480	1 000	715	368
600	10	235	725	400	400	455	497	390	81	580	1 072	780	400
	16	315	770	400	428	504	555	390	104.5	580	1 158	840	400
700	10	352	840	400	480	550	601	430	104.5	675	1 281	895	430
	16	408	840	400	497	555	616	430	53	675	1 313	910	430
800	10	494	950	500	540	600	661	470	53	780	1 451	1 022	450
	16	569	950	500	555	600	661	470	53	780	1 466	1 030	450
900	10	652	1 050	600	592	647	708	510	53	880	1 600	1 115	510
	16	660	1 050	600	626	665	730	510	130	880	1 656	1 125	536
1 000	10	893	1 160	600	678	717	782	550	130	982	1 760	1 230	560
	16	1 158	1 170	600	701	772	850	550	140	982	1 851	1 255	560
1 200	10	1 568	1 380	600	799	865	943	630	140	1 171	2 042	1 455	655
	16	1 771	1 390	600	822	930	1 027	630	140	1 171	2 149	1 485	655
1 400	10	2 008	1 590	500	920	1 025	1 122	710	182	1 375	2 292	1 675	755
	16	2 337	1 590	600	973	1 055	1 163	710	209	1 375	2 436	1 685	755
1 600	10	3 125	1 820	600	1 061	1 180	1 288	790	209	1 569	2 649	1 915	900
	16	3 702	1 820	600	1 104	1 215	1 327	790	256	1 569	2 731	1 930	900
1 800	10	4 617	2 020	600	1 195	1 286	1 398	870	256	1 776	2 893	2 115	1 013
	16	5 209	2 020	800	1 198	1 335	1 434	870	246	1 776	3 032	2 130	1 013

DIMENSIONS AND WEIGHTS

DOUBLE ECCENTRIC BUTTERFLY VALVE - EVOLUTION

BARE SHAFT AND SQUARE SHAFT PREPARED FOR PNEUMATIC ACTUATOR

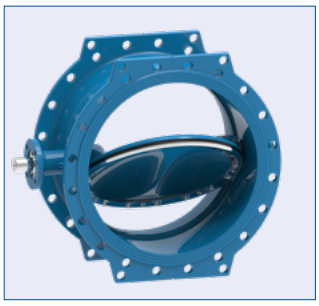

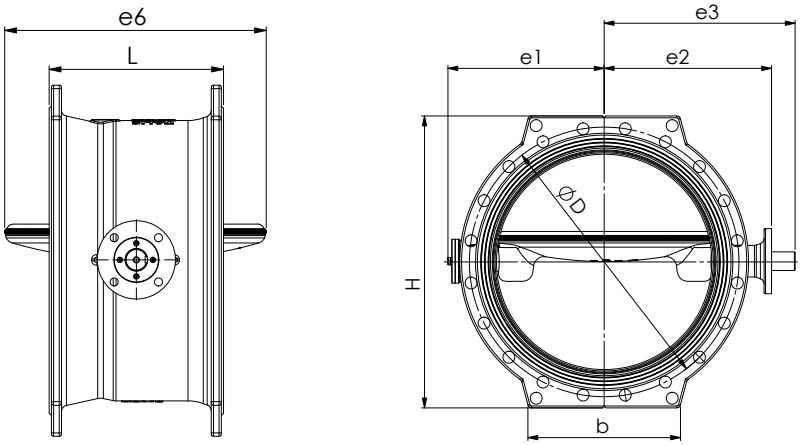

DN	PN	Weight	D	e1	e2	e3	L	e6	H	b	For gearbox / electric actuator		For pneumatic actuator
		kg	mm	mm	mm	mm	mm	mm	mm	mm	Round shaft Ø mm	Key	Square shaft mm
300	10	57	400	235	270	307.5	270	280	445	150	28	C8x36	22 x 22
	16	62	410	243	288	339	270	280	460	150	28	C8x50	27 x 27
350	10	75	460	265	310	361	290	330	505	180	28	C8x50	27 x 27
	16	83	470	272	315	366	290	330	520	180	36	C10x45	27 x 27
400	10	97	515	295	340	391	310	375	565	200	36	C10x45	27 x 27
	16	112	525	307	359	410	310	375	580	200	42	C12x60	36 x 36
450	10	142	565	347	385	447	330	430	640	275	42	C12x60	36 x 36
	16	142	585	347	385	447	330	430	640	275	42	C12x60	36 x 36
500	10	154	620	350	410	471	350	480	670	368	42	C12x60	36 x 36
	16	188	650	373	410	472	350	480	715	368	50	C14x60	36 x 36
600	10	226	725	400	455	517	390	580	780	400	50	C14x60	36 x 36
	16	292	770	428	504	582	390	580	840	400	60	C18x60	46 x 46
700	10	329	840	480	550	627	430	675	895	430	60	C18x80	46 x 46
	16	380	840	497	555	632	430	675	910	430	72	C20x80	46 x 46
800	10	466	950	540	600	677	470	780	1 022	450	72	C20x80	46 x 46
	16	541	950	555	600	708	470	780	1 030	450	80	C22x110	55 x 55
900	10	628	1 050	592	647	756	510	880	1 115	510	80	C22x110	55 x 55
	16	721	1 050	626	665	772	510	880	1 125	536	80	C22x110	55 x 55
1 000	10	861	1 160	678	717	827	550	982	1 230	560	80	C22x110	55 x 55
	16	1 109	1 170	701	772	895	550	982	1 255	560	100	C28x120	75 x 75
1 200	10	1 519	1 380	799	865	988	630	1 171	1 455	655	100	C28x120	75 x 75
	16	1 708	1 390	822	930	1051	630	1 171	1 485	655	100	C28x120	75 x 75
1 400	10	1 945	1 590	920	1 025	1 145	710	1 375	1 675	755	100	C28x120	75 x 75
	16	2 202	1 590	973	1 055	1 215	710	1 375	1 685	755	157	C40x155	-
1 600	10	2 990	1 820	1 061	1 180	1 340	790	1 569	1 915	900	157	C40x155	-
	16	3 482	1 820	1 104	1 215	1 382	790	1 569	1 935	900	157	C40x155	-
1 800	10	4 397	2 020	1 195	1 286	1 453	870	1 776	2 120	1 013	157	C40x155	-
	16	4 987	2 020	1 198	1 335	1 495	870	1 776	2 135	1 013	157	C40x155	-

DOUBLE ECCENTRIC BUTTERFLY VALVE - EVOLUTION

WITH GEARBOX PREPARED FOR ELECTRIC ACTUATOR

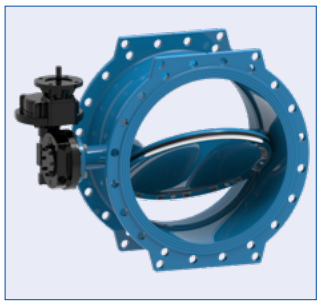

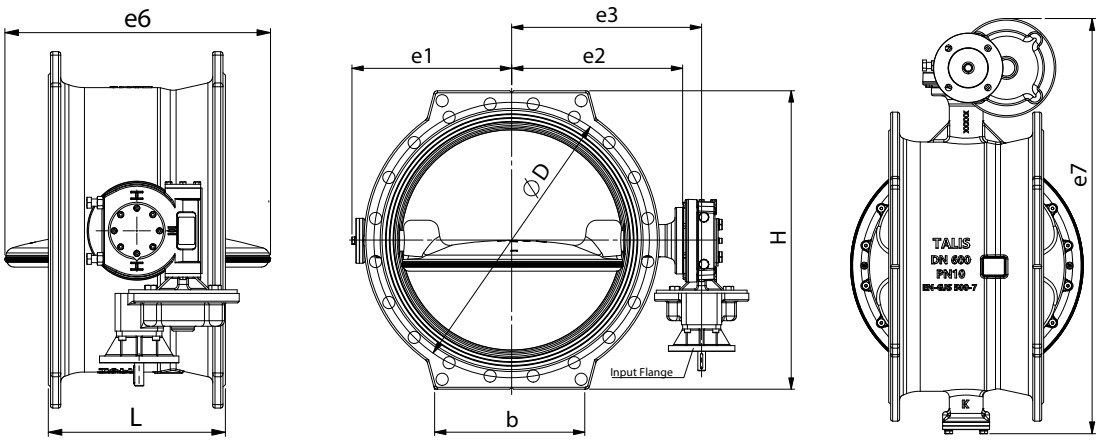

DN	PN	Weight	D	d	e1	e2	e3	L	e6	e7	H	b
		kg	mm	mm	mm	mm	mm	mm	mm	mm	mm	mm
300	10	68	400	300	235	270	319	270	280	704	445	150
	16	84	410	200	243	288	337	270	280	680	460	150
350	10	86	460	300	265	310	360	290	330	775	505	180
	16	105	470	200	272	315	365	290	330	737	520	180
400	10	119	515	200	295	340	390	310	375	785	565	200
	16	134	525	300	307	359	409	310	375	866	580	200
450	10	164	565	300	347	385	435	330	430	932	640	275
	16	164	585	300	347	385	435	330	430	932	640	275
500	10	184	620	300	350	410	460	350	480	960	670	368
	16	218	650	300	373	410	470	350	480	993	715	368
600	10	256	725	300	400	455	515	390	580	1 065	780	400
	16	345	770	300	428	504	554	390	580	1 132	840	400
700	10	382	840	300	480	550	600	430	675	1 230	895	430
	16	433	840	300	497	555	605	430	675	1 252	910	430
800	10	524	950	300	540	600	669	470	780	1 359	1 022	450
	16	620	950	300	555	600	670	470	780	1 375	1 030	450
900	10	655	1 050	300	592	647	723	510	880	1 370	1 115	510
	16	766	1 050	300	626	665	745	510	880	1 426	1 125	536
1 000	10	906	1 160	300	678	717	797	550	982	1 540	1 230	560
	16	1 165	1 170	300	701	772	865	550	982	1 630	1 255	560
1 200	10	1 575	1 380	300	799	865	958	630	1 171	1 820	1 455	655
	16	1 801	1 390	600	822	930	1047	630	1 171	1 939	1 485	655
1 400	10	2 038	1 590	600	920	1 025	1 162	710	1 375	2 132	1 675	755
	16	2 337	1 590	600	973	1 055	1 183	710	1 375	2 236	1 685	755
1 600	10	3 125	1 820	600	1 061	1 180	1 308	790	1 569	2 449	1 915	900
	16	3 702	1 820	1 000	1 104	1 215	1 347	790	1 569	2 541	1 935	900
1 800	10	4 617	2 020	1 000	1 195	1 286	1 418	870	1 776	2 703	2 120	1013
	16	5 209	2 020	1 000	1 198	1 335	1 454	870	1 776	2 732	2 135	1013

GEARBOX AND ACTUATOR SIZING

OPERATION WITH HANDWHEEL

STANDARD GEARBOX, CLOCKWISE CLOSING, IP67

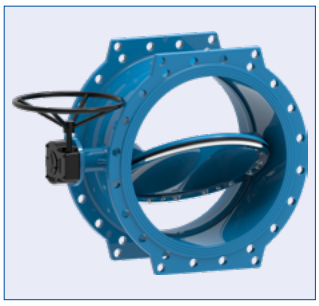

DN	PN	Torque at shaft Nm	Connection ISO 5211 - Shaft Ø mm	Gearbox size	Ratio:1	Number of turns	Handwheel Ø mm	Max. input torque at gearbox Nm
300	10	610	F10 - 28	242-30S	40	10	250	650
	16	760	F12 - 28	242-40S	40	10	250	1200
350	10	650	F12 - 28	242-30M	40	10	300	650
	16	850	F12 - 36	242-40S	40	10	300	1200
400	10	740	F12 - 36	242-40S	40	10	300	650
	16	930	F14 - 42	242-40M	40	10	300	1 200
450	10	1 000	F14 - 42	242-40M	40	10	300	1 200
	16	1 200	F14 - 42	242-40M	40	10	300	1 200
500	10	1 420	F14 - 42	242-45M	50	13	350	1 200
	16	1 780	F14 - 50	242-45M	50	13	350	2 000
600	10	1 710	F14 - 50	242-45M	50	13	350	2 000
	16	2 140	F16 - 60	AB1250N	55	14	350	3 250
700	10	2 770	F16 - 60	AB1250N	55	14	400	3 250
	16	3 250	F16 - 72	AB2000N	109	27	400	4 500
800	10	3 520	F16 - 72	AB2000N	109	27	500	4 500
	16	4 400	F25 - 80	AB2000NLB	109	27	500	4 500
900	10	4 500	F25 - 80	AB2000NLB	109	27	500	4 500
	16	5 250	F25 - 80	AB1950N	217	54	600	7 000
1 000	10	5 500	F25 - 80	AB1950N	217	54	600	7 000
	16	7 500	F30 - 100	AB3000NLB/PR4	243	61	600	9 000
1 200	10	7 000	F30 - 100	AB3000NLB/PR4	243	61	600	9 000
	16	8 500	F30 - 100	AB3000NLB/PR6	348	87	600	11 000
1 400	10	12 500	F30 - 100	AB6800N	468	117	500	17 000
	16	14 500	F35 - 157	A200N	729	182	600	26 000
1 600	10	15 500	F35 - 157	A200N	729	182	600	26 000
	16	17 500	F40 - 157	A250N	729	182	600	32 000
1 800	10	25 000	F40 - 157	A250N	729	182	600	32 000
	16	32 500	F48 - 157	IW82	360	90	800	37 000

OPERATION WITH HANDWHEEL

OPTIONAL GEARBOX, ANTI-CLOCKWISE CLOSING AND/OR IP68

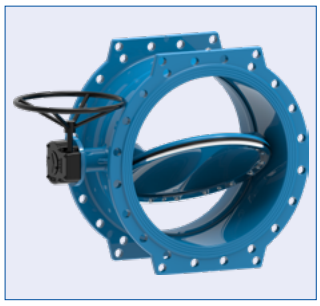

DN	PN	Torque at shaft Nm	Connection ISO 5211 - Shaft Ø mm	Gearbox size	Ratio:1	Number of turns	Handwheel Ø mm	Max. input torque at gearbox Nm
300	10	610	F10 - 28	AB550N	34	9	300	1 000
	16	760	F12 - 28	AB550N	34	9	300	1 000
350	10	650	F12 - 28	AB550N	34	9	300	1 000
	16	850	F12 - 36	AB550N	34	9	300	1 000
400	10	740	F12 - 36	AB550N	34	9	300	1 000
	16	930	F14 - 42	AB880N	38	10	400	2 000
450	10	1 000	F14 - 42	AB880N	38	10	400	2 000
	16	1 200	F14 - 42	AB880N	38	10	400	2 000
500	10	1 420	F14 - 42	AB880N	38	10	400	2 000
	16	1 780	F14 - 50	AB880N	38	10	400	2 000
600	10	1 710	F14 - 50	AB1250N	55	14	400	3 250
	16	2 140	F16 - 60	AB1250N	55	14	400	3 250
700	10	2 770	F16 - 60	AB1250N	55	14	400	3 250
	16	3 250	F16 - 72	AB2000N	109	27	500	4 500
800	10	3 520	F16 - 72	AB2000N	109	27	500	4 500
	16	4 400	F25 - 80	AB2000NLB	109	27	500	4 500
900	10	4 500	F25 - 80	AB2000NLB	109	27	500	4 500
	16	5 250	F25 - 80	AB1950N	217	54	600	7 000
1000	10	5 500	F25 - 80	AB1950N	217	54	600	7 000
	16	7 500	F30 - 100	AB3000NLB/PR4	243	61	600	9 000
1200	10	7 000	F30 - 100	AB3000NLB/PR4	243	61	600	9 000
	16	8 500	F30 - 100	AB3000NLB/PR6	348	87	600	11 000
1400	10	12 500	F30 - 100	AB6800N	468	117	500	17 000
	16	14 500	F35 - 157	A200N	729	182	600	26 000
1600	10	15 500	F35 - 157	A200N	729	182	600	26 000
	16	17 500	F40 - 157	A250N	729	182	600	32 000
1800	10	25 000	F40 - 157	A250N	729	182	600	32 000
	16	32 500	F48 - 157	IW82	360	90	800	37 000

GEARBOX AND ACTUATOR SIZING

GEARBOX PREPARED FOR ELECTRIC ACTUATOR

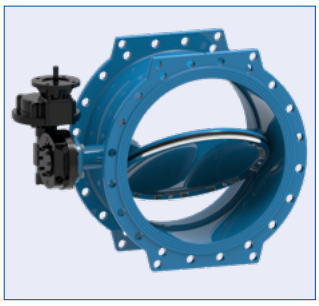

DN	PN	Torque at shaft Nm	Connection ISO 5211 at valve - Shaft Ø mm	Connection ISO 5210 at gearbox - Shaft Ø mm	Gearbox size (Rotork)	Handwheel Ø mm	Ratio:1	Number of turns	Mechanical Advantage	Torque at gearbox Nm	Max. motorized input torque Nm	Required torque at gearbox Nm
300	10	610	F10 - 28	F10 - 15	IW3	300	40	10	15	1 085	72	41
	16	760	F12 - 28	F10 - 17	IW4	200	70	18	23	2 034	88	33
350	10	650	F12 - 28	F10 - 15	IW3	300	40	10	15	1 085	72	43
	16	850	F12 - 36	F10 - 17	IW4	200	70	18	23	2 034	88	37
400	10	740	F12 - 36	F10 - 17	IW4	300	70	18	23	2 034	88	32
	16	930	F14 - 42	F10 - 17	IW4	300	70	18	23	2 034	88	40
450	10	1 000	F14 - 42	F10 - 17	IW4	300	70	18	23	2 034	88	43
	16	1 200	F14 - 42	F10 - 20	IW4	300	80	20	29	2 440	84	41
500	10	1 420	F14 - 42	F10 - 20	IW4	300	80	20	29	2 440	84	49
	16	1 780	F14 - 50	F10 - 20	IW4	300	120	30	43	2 617	61	41
600	10	1 710	F14 - 50	F10 - 20	IW4	300	120	30	43	2 617	61	40
	16	2 140	F16 - 60	F10 - 20	IW5	300	160	40	65	4 447	68	33
700	10	2 770	F16 - 60	F10 - 20	IW5	300	160	40	65	4 447	68	43
	16	3 250	F16 - 72	F10 - 20	IW5	300	160	40	65	4 447	68	50
800	10	3 520	F16 - 72	F10 - 20	IW52	300	200	50	81	5 334	66	43
	16	4 400	F25 - 80	F10 - 20	IW6	300	280	70	88	9 924	113	50
900	10	4 500	F25 - 80	F10 - 20	IW6	300	280	70	88	9 924	113	51
	16	5 250	F25 - 80	F10 - 20	IW6	300	280	70	88	9 924	113	60
1000	10	5 500	F25 - 80	F10 - 20	IW6	300	350	88	110	9 924	90	50
	16	7 500	F30 - 100	F10 - 20	IW6	300	420	105	132	9 924	75	57
1200	10	7 000	F30 - 100	F10 - 20	IW7	300	480	120	189	15 253	81	37
	16	8 500	F30 - 100	F10 - 20	IW72	600	360	90	142	20 000	141	60
1400	10	12 500	F30 - 100	F10 - 20	IW72	600	360	90	142	20 000	141	88
	16	14 500	F35 - 157	F10 - 20	IW8	600	480	120	189	26 031	138	77
1600	10	15 500	F35 - 157	F10 - 20	IW8	600	480	120	189	26 031	138	82
	16	17 500	F40 - 157	F14 - 30	IW82	1 000	360	90	142	37 000	261	123
1800	10	25 000	F40 - 157	F14 - 30	IW82	1 000	360	90	142	37 000	261	176
	16	32 500	F48 - 157	F14 - 30	IW82	1 000	360	90	142	37 000	261	229

OPERATION WITH ELECTRIC ACTUATOR

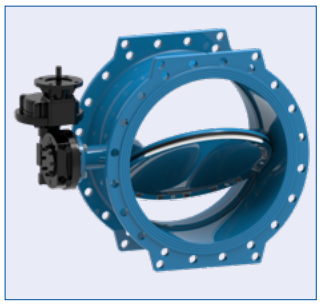

DN	PN	Rotork actuator size	Rotork speed RPM	Operating time Rotork s	Actuator torque Rotork Nm	Motorized output torque Rotork Nm	Auma actuator size	Auma speed RPM	Operating time Auma s	Actuator torque Auma Nm	Motorized output torque Auma Nm
300	10	CK60	24	25	60	900	SA 07.6	32	19	60	900
	16	CK60	24	44	60	1 380	SA 07.6	63	17	60	1 380
350	10	CK60	24	25	60	900	SA 07.6	32	19	60	900
	16	CK60	24	44	60	1 380	SA 07.6	63	17	60	1 380
400	10	CK60	24	44	60	1 380	SA 07.6	63	17	60	1 380
	16	CK60	24	44	60	1 380	SA 07.6	63	17	60	1 380
450	10	CK60	24	44	60	1 380	SA 07.6	63	17	60	1 380
	16	CK60	24	50	60	1 740	SA 07.6	63	19	60	1 740
500	10	CK60	24	50	60	1 740	SA 07.6	63	19	60	1 740
	16	CK60	24	75	60	2 580	SA 07.6	63	29	60	2 580
600	10	CK60	24	75	60	2 580	SA 07.6	63	29	60	2 580
	16	CK60	24	100	60	3 900	SA 07.6	90	27	60	3 900
700	10	CK60	24	100	60	3 900	SA 07.6	90	27	60	3 900
	16	CK60	24	100	60	3 900	SA 07.6	90	27	60	3 900
800	10	CK60	24	125	60	4 860	SA 07.6	90	33	60	4 860
	16	CK60	24	175	60	5 280	SA 07.6	90	47	60	5 280
900	10	CK60	24	175	60	5 280	SA 07.6	90	47	60	5 280
	16	CK60	24	175	60	5 280	SA 07.6	90	47	60	5 280
1 000	10	CK60	24	219	60	6 600	SA 07.6	90	58	60	6 600
	16	CK60	24	263	60	7 920	SA 07.6	90	70	60	7 920
1 200	10	CK60	24	300	60	11 340	SA 07.6	90	80	60	11 340
	16	CK120	24	225	120	17 040	SA 07.6	90	60	60	8520
1 400	10	CK120	24	225	120	17 040	SA 10.2	90	60	120	17 040
	16	CK120	24	300	120	22 680	SA 10.2	90	80	120	22 680
1 600	10	CK120	24	300	120	22 680	SA 10.2	90	80	120	22 680
	16	CK250	24	225	250	35 500	SA 14.2	63	86	250	35 500
1 800	10	CK250	24	225	250	35 500	SA 14.2	63	86	250	35 500
	16	CK250	24	225	250	35 500	SA 14.2	63	86	250	35 500

TALIS

House Connections

Welcome to the world of TALIS

Our job is to protect water, the element that is vital for life. Together with our customers and partners, we are living up to this responsibility all over the world. Our ideas, work and products are the driving force for this.

Using the latest technologies, we are helping to develop responsible supply and disposal systems. Exemplary standards guarantee efficiency. Making use of the power, purity and availability of water is our maxim.

For generations our globally recognised brands have been proof of this ability. Our knowledge has grown along with our customers. In Europe, Africa, Asia, Australia and America our products are helping to guarantee not only the safety of water but also operations and investments. We can provide probably the most comprehensive range of products for the water and sewage industry. With a broad range of products, from small air valves to the huge DN 3600 butterfly valve, TALIS has the right product for every job. TALIS also has the engineering expertise to configure products to specifically match our customer's requirements.

We are fully motivated and committed to continue working on these achievements and responsibilities of today and tomorrow: for our future – water.

Contents

Meterboxes

Meterbox Introduction 5
Single Meterboxes 6
Double and Twin Meterboxes 16
Multi Meterboxes 20
Spare Parts and Accessories 22

Service Connections

Gunmetal Straps, Ferrules & STFS Introduction 27
Technical Data 29
Flat Boss Saddle & Straps 30
Swivel Ferrules 37
Combined Saddle Ferrules 47
Self Tapping Ferrules Straps 57
Replacement Banjos 68

ERHARD

ERHARD ASBP Service Saddle 71

Talbot

Talbot Pushfit 74
Grippa 75
Pushfit Connections 76
Talbot Pushfit Leadfit 83
Pushfit & Grippa Instructions 84

EBCO Fittings

EBCO-B Fittings for PE Pipe 85
EBCO-S Gunmetal Type B Copper Compression Fittings ... 90
EBCO Gunmetal BSP Threaded Fittings 93

Manifolds

Technical Data 103
Manifolds 104
Accessories & Replacements 113

Valves & Stopcocks

Technical Data 114
Valves and Stopcocks 116

EBCO Gunmetal Hose Fittings

Technical Data 127
Hose Fittings 128

Meter Boxes

Introduction - Boundary Water Meter Boxes

TALIS UK brings you the combined portfolio of Talbot, EBCO and Atplas Meterboxes; with the extensive experience of supplying to the UK Water Utilities and European Municipalities since the early 1980's. Now looking further afield in conjunction with TALIS Group colleagues; to introduce the concepts to the wider global market and to bring home innovations for the UK.

Innovation has been the foundation of our success and product has evolved to meet both the technical and cost criteria encountered. The product range has expanded beyond a simple chamber with a meter-port and valve at the bottom, to include different connections, employing new materials and multiple service alternatives

Installation control and flexibility has always been the top practical consideration and continues to top the list with 'one visit' installation being a key factor, keeping costs down for the installer.

The TALIS range of Below Ground Boundary boxes are designed to be installed in non-traffic locations, giving meter reader and consumer easy and convenient access. The range has a proven track record with many millions fitted over the last 30 years.

The range provides flexibility for installers, all as a result of significant innovation and cooperation since the early 1980's; working closely with customers and installers.

Key Benefits: An Integral Chamber, Valve, Meter Manifold & Surface Cover optimise conditions for:

- Access to read the meter or operate the valve
- Simplify logistics in stores and for installers
- Controlled standards of installation with assured meter and valve position
- Integrated pipe connections, help to minimise additional joints, reducing leakage potential and reducing excavation & reinstatement

Design features: Designed to comply with the Water Industry Specification WIS 4.37.01 and BS5834-2 and manufactured in an ISO 9001 and ISO14001 environment. The range holds all necessary WRAS approvals.

The range uses engineered materials with characteristics suitable for the intended purpose and appropriate for the anticipated environment in which the product will be installed.

All boxes offer a Class C Frame & Cover.

TALBOT Matrix Single Box

Benefits

Telescopic chamber – One single moulding

Greatly reduces the risk of ground water getting into the system through any seals or joints. This means that the meter reader is less likely to encounter a chamber that is full of water. The telescopic chamber combined with a final height adjustment of up to 50mm in the surface box gives excellent overall height adjustment.

Ease of installation

Small, stable footprint makes it easy to install in congested trenches and requires minimal excavation. The round surface box has a removable square flange that makes correct back filling easy. The surface box flange can also be rotated through 360° and the surface box has up to 8° of tilt making alignment with paving materials and gradients simple.

Ease of operation

The surface box lid provides excellent visibility and access to the meter and shut off device. The shut off device is a 1/4 turn ball valve that greatly reduces head loss and has a built in stop, making it simple to turn the supply on and off. The system can also be converted to meet the requirements for automatic meter reading installation.

16 bar pressure rating

The 16 bar pressure rating of the Talbot Matrix Boundary box not only exceeds the 8 – 10 bar normal working pressure, it also exceeds the typical 12 bar pressure rating of the pipe. Matrix is designed to cope with almost any eventuality regarding water pressure fluctuations, reducing the risk of failure in the field.

Flexible connection system

Optional vertical or horizontal Talbot Pushfit inlets and outlets are available in 20mm, 25mm and 32mm. alternatives as well as their imperial equivalents and Irish heavy gauge sizes. These alternatives offer an easy and efficient method of connection, helping in congested trench conditions where traditionally several connections may have been needed to effect an installation.

Feature	Single Telescopic Sealed
Frame & Cover	Universal 8° tilt. Pluck lid. Square swivel plate. Lid tether as standard. Irish boxes lid marked WATER and UISCE Glass Filled Polypropylene. Grade C load bearing according to WIS 4-37-01
Guard Tube Material	Mineral Filled Polypropylene
Guard Tube Profile	Stadium profile with 173mm x 116mm opening
Height Adjustment (approx)	470mm to 850mm (inc. 50mm final height adjustment in surface box and 25mm guard tube overlap). Short 281mm to 495mm
Frost Protection	As standard in accordance with WIS 4-37-01
Water Tightness	Watertight (WIS 4.37.01)
Shut Off Device	¼ Turn Ball valve or 360° Spherical valve
Non Return Valve	In accordance with WIS 5-11-01, BS EN 13959: 2004 Family E Type
Manifold	Raised style; Plastic (Acetal Co-Polymer)
Meter Connection	1½" BSP concentric meters up to Qn 2.5m^3/ hr
Head Loss	< 3 metres @ 25 l/min flow-rate with meter in accordance with WIS 4-37-01
Inlet options	25mm or 32mm Pushfit in accordance with WIS 4-32-11, ½" IHG Pushfit for PE
Outlet	Outlet as per selected inlet
Blanking Plugs	Full Flow (standard) - 27/28mm tapered A/F hexagonal upstand
Product Weight (approx)	3.4kg - 4.5 kg
Pallet Quantity	40 per pallet

TALBOT Matrix
Sealed Single Box
Sealed Telescopic | Plastic

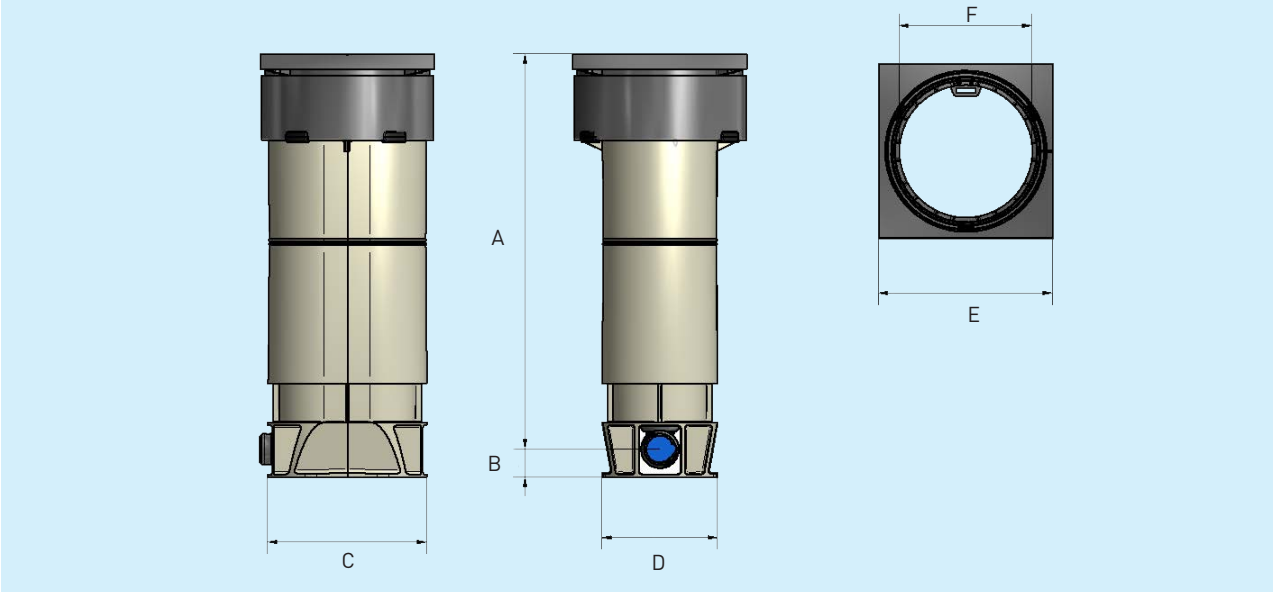

Box	A (min/max)	B	C	D	E	F
MATRIX	See below	35mm	208mm	151mm	227mm	173mm

Sealed Telescopic Plastic Raised Manifold

Part Number	Connections	Shut off	Manifold	Height (A)	Lid
E8951	25mm PF	¼ Turn	Plastic - Raised	470-850mm	Tilt Pluck Swivel Square
E9136	32mm PF	¼ Turn	Plastic - Raised	470-850mm	Tilt Pluck Swivel Square
E9859	25mm PF	360° Spherical	Plastic - Raised	470-850mm	Tilt Pluck Swivel Square
E9884	32mm PF	360° Spherical	Plastic - Raised	470-850mm	Tilt Pluck Swivel Square
E9663	25mm PF	¼ Turn	Plastic - Raised	281-495mm	Tilt Pluck Swivel Square

Sealed Telescopic Plastic Raised Manifold Irish Water (Lid marked WATER and UISCE)

Part Number	Connections	Shut off	Manifold	Height (A)	Lid (WATER and UISCE)
E9130	½" Irish HG PF	Screw-down	Plastic - Raised	470-850mm	Tilt Pluck Swivel Square
E9195	20mm PF	Screw-down	Plastic - Raised	470-850mm	Tilt Pluck Swivel Square
E9196	25mm PF	Screw-down	Plastic - Raised	470-850mm	Tilt Pluck Swivel Square

EBCO
Single Box - Telescopic

HINGED LID (SSSH)
MANIFOLD IN GUNMETAL

PLUCK LID (TPSS)
MANIFOLD IN PLASTIC

Benefits

A light one piece unit with a slope/tilt plastic lid secured to the upper guard tube. Both the inner and outer guard tube can be removed from the base during installation and cut to site requirement if needed. Height adjustement from 550 to 900mm, 360° rotational, 6° slope/tilt alignment with hinged lid and 8° tilt with pluck lid.

Telescopic Chambers

- Manifolds in gunmetal or plastic.
- Manifolds in base or raised pattern
- Available with Hinged lid or Pluck lid designs
- Plastic Manifolds 12 bar pressure rating
- Gunmetal Manifolds 16 bar pressure rating

Feature	Single Telescopic
Frame & Cover	Hinged Lid: Universal 6° tilt. Rectangular frame and lid. Sealed, hinged with snap shut lid or lockable lid. 30mm of final height adjustment. Pluck Lid: Universal 8° tilt. Pluck lid. Square swivel plate. Lid tether as standard. Glass Filled Polypropylene. Grade C load bearing according to WIS 4-37-01
Guard Tube Material	PVC
Guard Tube Profile	Cylindrical with 188/200 mm diameter / 4 mm
Height Adjustment (approx)	475mm to 770mm (inc. surface box height adjustment and 25mm guard tube overlap)
Frost Protection	As standard in accordance with WIS 4-37-01.
Water Tightness	Watertight (WIS 4.37.01) OR Unsealed
Shut Off Device	¼ turn valve in Plastic or Gunmetal
Non Return Valve	In accordance with (WIS 5-11-01) BS EN 13959:2004 Family E Type B
Manifold	Raised or Base style in Plastic or Gunmetal
Meter Connection	G1.5 (1½" BSP) Concentric Meter-port (typically for Meters up to Qn2.5 rating)
Head Loss	< 3 metres @ 25 l/min flow-rate with meter in accordance with WIS 4-37-01
Inlet options	25mmPF or ¾"F BSP in accordance with WIS 4-32-11
Outlet	Outlet as per selected inlet
Blanking Plugs	Full flow (standard) 27/28 tapered A/F hexagonal upstand. Plastic dust cap if required.
Product Weight (approx)	4.8 kg - 5.8 kg
Pallet Quantity	40 per pallet

EBCO
Single Box - Telescopic
Sealed or Unsealed Telescopic | Gunmetal or Plastic

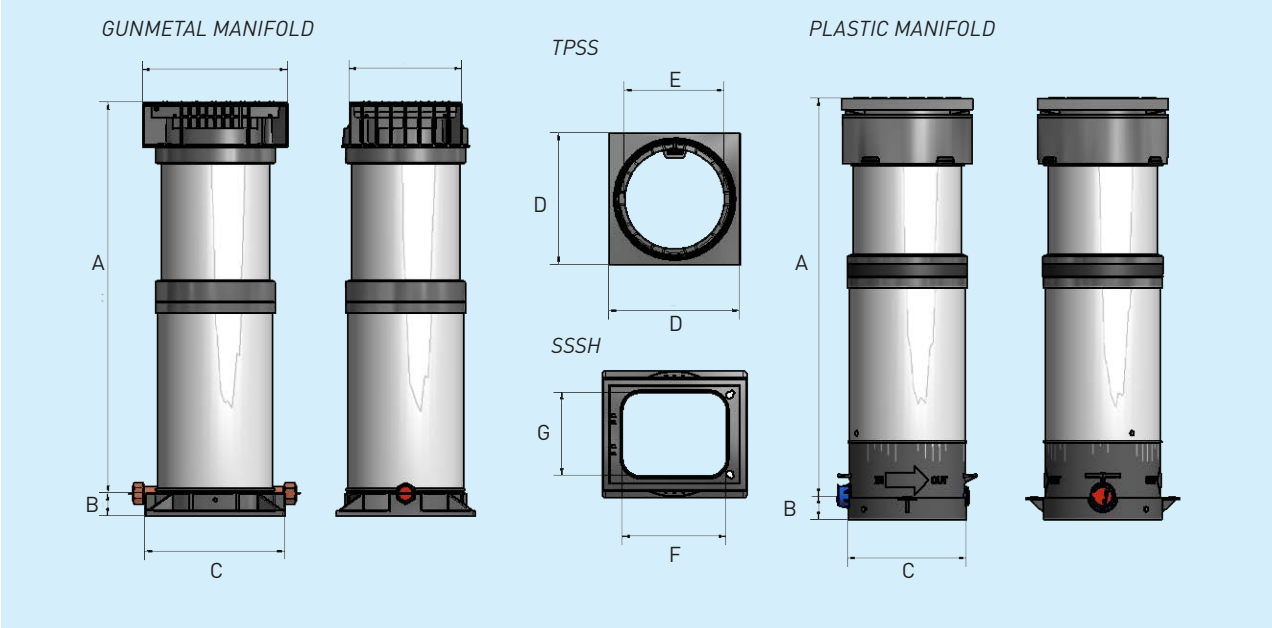

Box	A (min/max)	B	C	D	E	F	G
EBCO Gunmetal	See below	40mm	242mm	225mm	195mm	178mm	145mm
EBCO Plastic	See below	40mm	208mm	225mm	173mm	N/A	N/A
EBCO Plastic MBR100/UN	See below	40mm	208mm	251mm	195mm	178mm	145mm

Sealed Telescopic

Part Number	Connections	Shut off	Manifold	Height (A)	Lid
MBR1120	25mm BPF	¼ Turn	Plastic - Raised	568-878mm	Tilt Pluck Swivel Square (UISCE Lid)
MBB2010	3/4" Female	¼ Turn	Gunmetal - Base	470-730mm	Snap-shut Sealed Hinged

Unsealed Telescopic Plastic Manifold

Part Number	Connections	Shut off	Manifold	Height (A)	Lid
MBB1100	25mm BPF	¼ Turn	Plastic - Base	560-820mm	Tilt Pluck Swivel Square
MBR1100	25mm BPF	¼ Turn	Plastic - Raised	610-880mm	Tilt Pluck Swivel Square
MBR1000/UN	25mm BPF	¼ Turn	Plastic - Raised	565-860mm	Snap Shut Unsealed Hinged

EBCO
Single Box - Rigid

Benefits

Exceeds the requirements of BS5834 part 2 class 'C' load bearing.

Constructed from 500mm, 600mm or 710mm , cut to the required depth on site.

The fixed height guard tube can be cut to the desired height on site ensuring precise final height adjustment.

The 200mm diameter white guard tube provides good access and high visibility of the meter and control valve making installation, operation and meter reading simple.

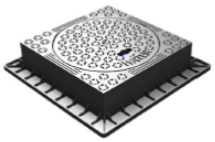

Surface Box Options Available: Plastic Grade C

Part Number	Description
9981	Matrix Surface Box Tilt in order to fit pavement camber, pluck lid, square swivel plate. Different options are available.
MB600200BK	EBCO Surface Box Tilt in order to fit pavement camber, hinged lid, rigid oblong frame. Different options are available.
WMB83	TALIS Surface Box Pluck lid, rigid square frame. Different options are available.

Feature	Single Rigid Unsealed
Guard Tube Material	PVC
Guard Tube Profile	Cylindrical with 200 mm diameter / 4 mm thick
Height	500, 600 or 710mm
Frost Protection	As standard in accordance with WIS 4-37-01
Water Tightness	Unsealed
Shut Off Device	¼ turn valve in Plastic or Gunmetal
Non Return Valve	In accordance with (WIS 5-11-01) BS EN 13959:2004 Family E Type B
Manifold	Raised or Base style in Plastic (Acetal Co-Polymer) or Gunmetal secured to manifold holder at bottom of chamber, pre-plumbed per WIS 4.37.01
Meter Connection	G1.5 (1½" BSP) Concentric meter-port (typically for meters up to Qn2.5 rating)
Head Loss	< 3 metres @ 25 l/min flow-rate with meter in accordance with WIS 4-37-01
Inlet options	25mmPF, ¾"F BSP or 25mm PE tail in accordance with WIS 4-32-11
Outlet	Outlet as per selected inlet
Blanking Plugs	Full Flow (standard) - 27/28mm tapered A/F hexagonal upstand
Product Weight (approx)	4.2 - 5.2kg
Pallet Quantity	40 per pallet

EBCO
Unsealed Single Box - Rigid

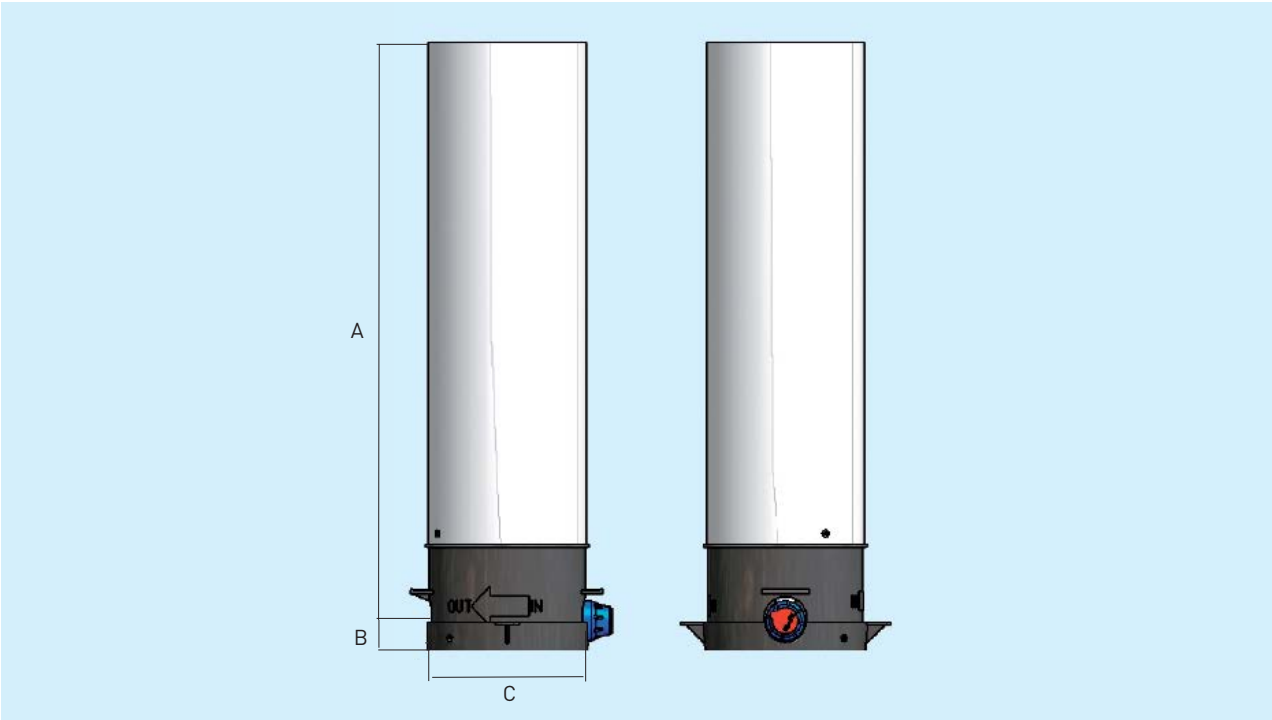

Box	A (min/max)	B	C
EBCO	See below	40mm	208 mm MAX

Unsealed Rigid Box

Part Number	Connections	Shut off	Manifold	Height (A)	Lid
MBR0905	25mm PE Tail	¼ Turn	Plastic - Raised	811mm	Supplied without lid
MBR903	25mm BPF	¼ Turn	Plastic - Raised	695mm	Supplied without lid
MBB0700S	25mm BPF	¼ Turn	Plastic - Base	674mm	Supplied without lid
MBB0775	¾" Female	¼ Turn	Plastic - Base	567mm	Supplied without lid
MBB0460	¾" Female	¼ Turn	Gunmetal - Base	677mm	Supplied without lid
MBR600	25mm PE Tail	¼ Turn	Gunmetal - Pentagon Raised	698mm	Supplied without lid

EBCO
Single Box - Ratchet

Benefits

Easy installation due to telescopic height adjustment in 5mm ratchet intervals.

Feature	Single Ratchet Unsealed
Frame & Cover (where provided)	Swivel square trim with round tethered pluck lid. PP - Grade C load bearing in accordance with WIS 4-37-01
Guard Tube Material	PVC tube, with PP upper frame
Guard Tube Profile	Cylindrical tube 200mm with 173mm circular opening
Height Adjustment (approx)	330-530mm or 550-750mm
Frost Protection	As standard in accordance with WIS 4-37-01
Water Tightness	Unsealed
Shut Off Device	¼ turn spherical valve in Plastic
Non Return Valve	In accordance with (WIS 5-11-01) BS EN 13959:2004 Family E Type B
Manifold	Raised or Base style in Plastic secured to manifold holder at bottom of chamber, pre-plumbed per WIS 4.37.01
Meter Connection	G1.5 (1½" BSP) Concentric meter-port (typically for meters up to Qn2.5 rating)
Head Loss	< 3 metres @ 25 l/min flow-rate with meter in accordance with WIS 4-37-01
Inlet options	25mmPF in accordance with WIS 4-32-11
Outlet	Outlet as per inlet
Blanking Plugs	Full Flow (standard) - 27/28mm tapered A/F hexagonal upstand
Product Weight (approx)	4.0 kg
Pallet Quantity	20 per pallet

EBCO
Unsealed Single Box - Ratchet

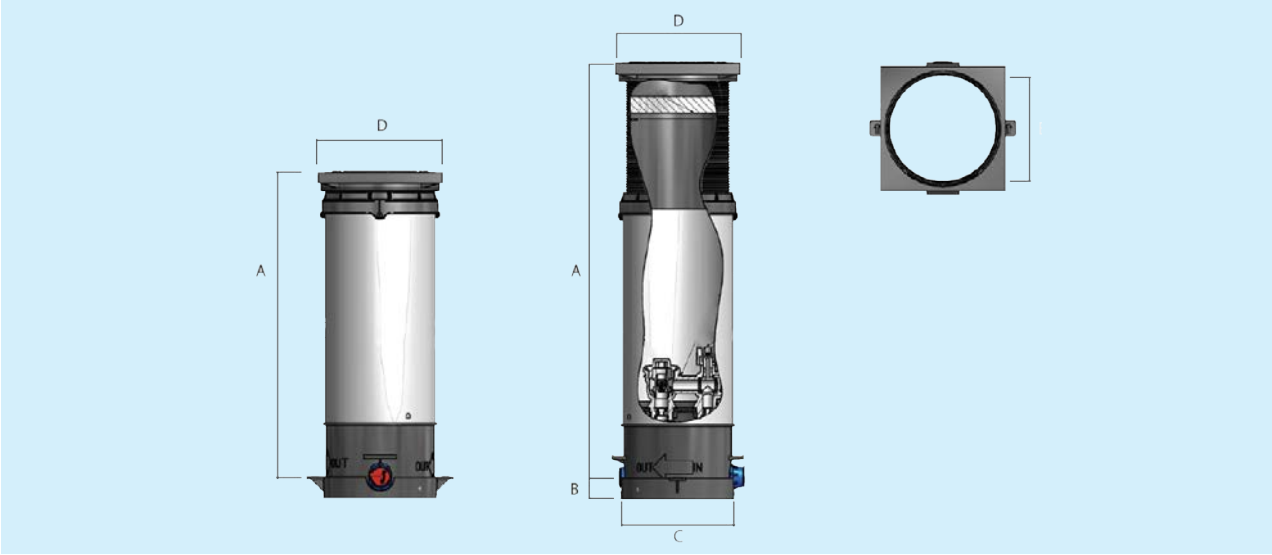

Box	A(min/max)	B	C	D	E
EBCO	See below	40mm	208mm	227mm	173mm

Ratchet Unsealed Telescopic Plastic Manifold

Part Number	Connections	Shut off	Manifold	Height (A)	Lid
MBR1200B	25mm PF	¼ Turn	Plastic- Raised	550-750mm	Fixed Pluck Swivel Square
MBR1205	25mm PE Tail	¼ Turn	Plastic- Raised	550-750mm	Fixed Pluck Swivel Square
MBB1200B	25mm PF	¼ Turn	Plastic- Base	330-530mm	Fixed Pluck Swivel Square
MBB1201S	25mm PF	¼ Turn	Plastic- Base	290-490mm	Fixed Pluck Swivel Square

ATPLAS
Single Box - Standard and Mini

Benefits

A Stadium shaped chamber helps prevent rotation and is intended to transfer any torque resulting from meter installation / removal to the ground around, through the 'flat sides' avoiding impact on service connections.

The Rising-Spindle Stop-valve design helps minimise damage through possible over-tightening, using a piston and bore arrangement with positive stop points and torque failsafe in the key and valve cap. The box is also available with a quarter turn valve instead.

Non-return valve can be replaced in-situ using appropriate tools and with regard for local regulations and working practices.

Water flow is assisted by the DN20 nominal bore through the manifold, with its non-return valve adapted to suit the concentric G1.5 meter interface.

The robust plastic surface box has a load bearing capacity of over 30 kN.

The removable square surface box flange aids back filling and can be rotated through 360° to make final alignment with paving materials easy. If needed a round surface box profile can be supplied to suit other surface material.

Up to 6° tilt and 30mm of final height adjustment on the surface box allows for easy and accurate alignment with surface levels and gradients.

Feature	Single Rigid
Frame & Cover	Universal 6° tilt. Swivel Square plate or Round rim. Pluck lid. Lid tether Glass Filled Polyester DMC - Grade C load bearing in accordance with WIS 4-37-01
Guard Tube Material	Glass Filled Polyester DMC (Dough Moulding Compound)
Guard Tube Profile	150mm by 122mm opening ~ Stadium profile
Height Adjustment (approx)	500mm to 825mm nom - Standard Box 275mm to 350mm nom - MINI Box * 25mm final height adjustment in surface box and 25mm guard tube overlap
Frost Protection	As standard in accordance with WIS 4-37-01. * Subject to deletion on request.
Water Tightness	Watertight (WIS 4.37.01) OR Unsealed
Shut Off Device	Rising-spindle with key as standard
Non Return Valve	In accordance with WIS 5-11-01
Manifold	Elevated arrangement in Plastic (Acetal Co-Polymer) secured into DMC chamber body, pre-plumbed per WIS 4.37.01
Meter Connection	G1.5 (1½" BSP) Concentric Meter-port (typically for Meters up to Qn2.5 rating)
Head Loss	< 3 metres @ 25 l/min flow-rate with meter in accordance with WIS 4-37-01
Inlet options	3/4"F BSP, 25mmPF and 32mmPF in accordance with WIS 4-32-11
Outlet	Outlet as per selected inlet
Blanking Plugs	Full Flow (standard) - 27/28mm tapered A/F hexagonal upstand
Product Weight (approx)	7 kg
Pallet Quantity	25 per pallet

ATPLAS
Below Ground Boundary Box
Sealed or Unsealed Single Box - Standard and Mini

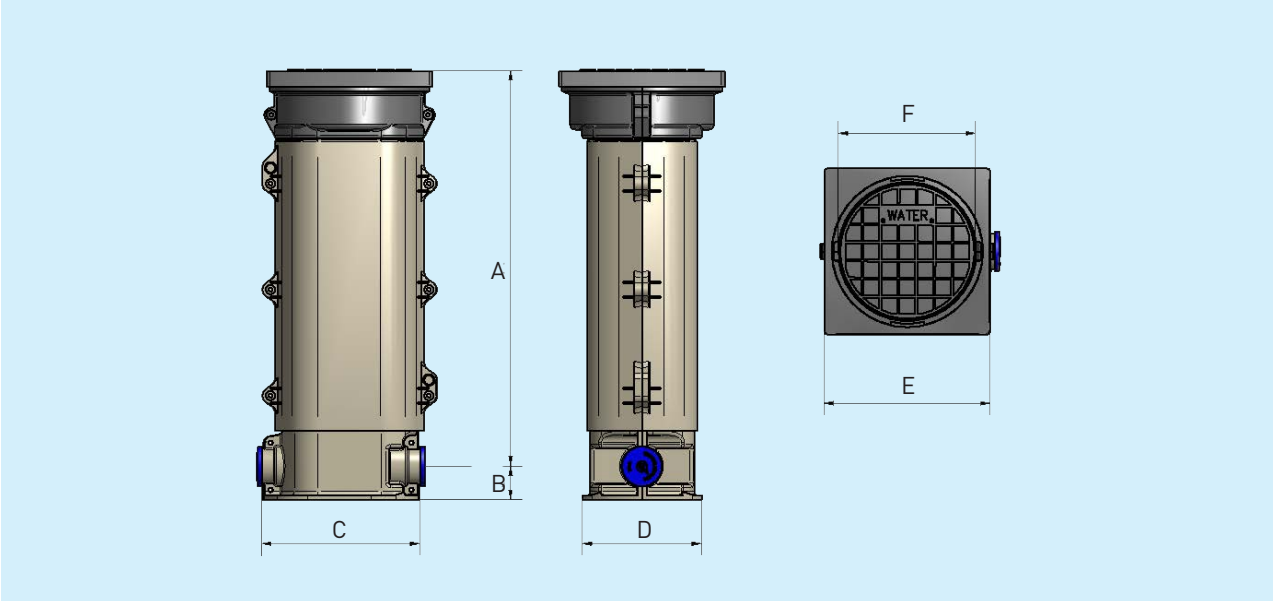

Box	A(min/max)	B	C	D	E	F
ATPLAS	See below	45mm	215mm	155mm	210mm	122mm

Sealed Telescopic Plastic Raised Manifold

Part Number	Connections	Shut off	Manifold	Height (A)	Lid
APC00525	25mm PF	Rising Spindle	Plastic-Raised	500-865mm	Tilt Pluck Swivel Square
APC00523	32mm PF	Rising Spindle	Plastic-Raised	500-865mm	Tilt Pluck Swivel Square
APC00491	¾" Female	Rising Spindle	Plastic-Raised	500-865mm	Tilt Pluck Swivel Square
APC00273	25mm PF	Rising Spindle	Plastic-Raised	500-865mm	Tilt Pluck Swivel Round
APC00883	32mm PF	Rising Spindle	Plastic-Raised	500-865mm	Tilt Pluck Swivel Round
APC00534	¾" Female	Rising Spindle	Plastic-Raised	500-865mm	Tilt Pluck Swivel Round
APC00551	¾" Female	Rising Spindle	Plastic-Raised	270-385mm	Tilt Pluck Swivel Square

Unsealed Telescopic Plastic Raised Manifold

Part Number	Connections	Shut off	Manifold	Height (A)	Lid
INT01286	25mm PF	Rising Spindle	Plastic-Raised	500-865mm	Tilt Pluck Swivel Square
INT01287	32mm PF	Rising Spindle	Plastic-Raised	500-865mm	Tilt Pluck Swivel Square
INT01288	¾" Female	Rising Spindle	Plastic-Raised	500-865mm	Tilt Pluck Swivel Square
MIN01303	¾" Female	Rising Spindle	Plastic-Raised	270-385mm	Tilt Pluck Swivel Square
INT01185	25mm PF	¼ Turn	Plastic-Raised	500-865mm	Tilt Pluck Swivel Square
INT01186	32mm PF	¼ Turn	Plastic-Raised	500-865mm	Tilt Pluck Swivel Square
INT01187	¾" Female	¼ Turn	Plastic-Raised	500-865mm	Tilt Pluck Swivel Square
MIN01175	¾" Female	¼ Turn	Plastic-Raised	270-385mm	Tilt Pluck Swivel Square
INT01122	25mm PF	Rising Spindle	Plastic-Raised	500-865mm	Tilt Pluck Round
INT01124	32mm PF	Rising Spindle	Plastic-Raised	500-865mm	Tilt Pluck Round
INT01123	¾" Female	Rising Spindle	Plastic-Raised	500-865mm	Tilt Pluck Round
MIN01125	¾" Female	Rising Spindle	Plastic-Raised	270-385mm	Tilt Pluck Round

EBCO
Unsealed Double and Twin Box - Rigid

Benefits

Simple low cost option to provide two metered outlets from single or twin inlets.

Exceeds the requirements of BS5834 part 2 class 'C' load bearing.

Constructed from 750mm tube, cut to the required depth on site.

The 250mm diameter white guard tube provides good access and high visibility of the meter and control valve making installation, operation and meter reading simple.

The fixed height guard tube can be cut to the desired height on site ensuring precise final height adjustment.

- Double box is single inlet and two outlets
- Twin box is two inlets and two outlets

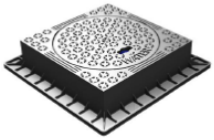

Surface Box Options (Plastic Grade C)

Part Number	Description
WMB84	TALIS Surface Box Pluck lid, rigid square frame. Different options are available.
MB601295BK	EBCO Surface Box Tilt in order to fit pavement camber, hinged lid, rigid oblong frame. Different options are available.

Feature	Single Rigid Unsealed
Frame & Cover (where provided)	Rectangular frame and lid. Sealed, hinged lid. Glass Filled Polypropylene. Grade C load bearing according to WIS 4-37-01.
Guard Tube Material	PVC
Guard Tube Profile	Cylindrical with 250 mm diameter / 5.3-5.7mm thick
Height Adjustment (approx)	670mm * 25mm guard tube overlap
Frost Protection	As standard in accordance with WIS 4-37-01
Water Tightness	Unsealed
Shut Off Device	2 x ¼ turn valves or screw down valves in plastic
Non Return Valve	In accordance with (WIS 5-11-01) BS EN 13959:2004 Family E Type B
Manifold	Raised or base style in plastic (Acetal Co-Polymer) secured to manifold holder at bottom of chamber, pre-plumbed per WIS 4.37.01
Meter Connection	G1.5 (1½" BSP) Concentric meter-port (typically for meters up to Qn2.5 rating)
Head Loss	< 3 metres @ 25 l/min flow-rate with meter in accordance with WIS 4-37-01
Inlet options	25mm PF, 32mm PF and BSP Thread in accordance with WIS 4-32-11
Outlet	Outlet as per Table page 121
Blanking Plugs	Dust caps on Gunmetal, full flow on plastic
Product Weight (approx)	4.2 - 5.2kg
Pallet Quantity	40 per pallet

EBCO
Unsealed Double and Twin Box - Rigid

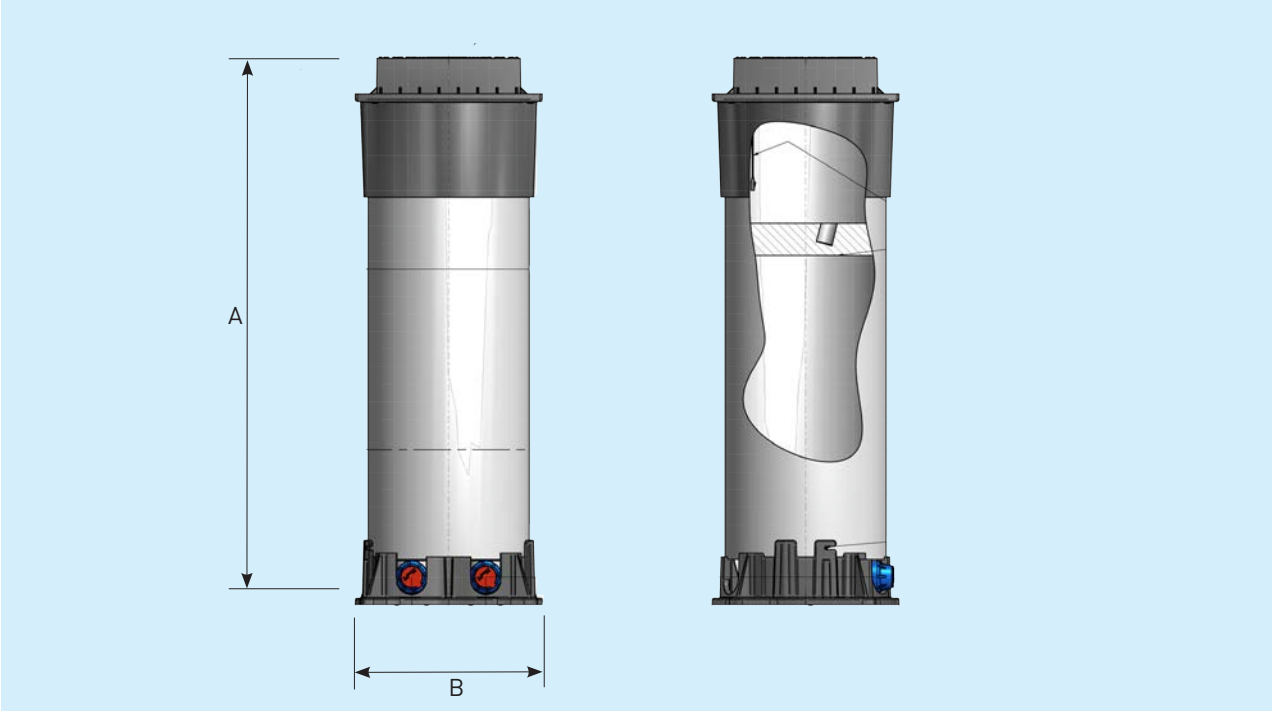

Box	A(min/max)	B
EBCO	See below	290mm

Unsealed Telescopic

Part Number	Connections	Type	Shut off	Manifold	Height (A)	Lid
MBB0931CWC	2 x 25mm BPF by 2 x 25mm BPF	Twin	¼ Turn	Plastic- Base	737mm	None
MBR5030	32mm BPF by 2 x 25mm BPF	Double	¼ Turn	Plastic- Raised	722-897mm	Snap-shut Unsealed Hinged
MBB0910	2 x 1" Male by 2 x ¾" Female	Twin	¼ Turn	Gunmetal- Base	600mm	None
MBR0920	1" Female by 2 x ¾" Female	Double	¼ Turn	Gunmetal- Base	600mm	None
MBB0931SB3	2 x 25mm BPF by 2 x 25mm BPF	Twin	¼ Turn	Plastic- Base	812-930mm	Tilt pluck swivel round
MBR5052	2 x 25mm BPF by 2 x 25mm BPF	Twin	¼ Turn	Plastic- Raised	755-872mm	Tilt pluck swivel round

ATPLAS
Double box

Benefits

A stadium shaped chamber helps prevent rotation and is intended to transfer any torque resulting from meter installation / removal to the ground around, through the 'flat sides' avoiding impact on service connections.

The Rising-Spindle Stop-valve design helps minimise damage through possible over-tightening, using a piston and bore arrangement with positive stop points and torque failsafe in the key and valve cap.The box is also vailable with a quarter turn valve instead.

Non-return valve can be replaced in-situ using appropriate tools and with regard for local regulations and working practices.

Water flow is assisted by the DN20 nominal bore through the manifold, with its non-return valve adapted to suit the concentric G1.5 meter interface.The robust plastic surface box has a load bearing capacity of over 30 kN.

Up to 6° tilt and 30mm of final height adjustment on the surface box allows for easy and accurate alignment with surface levels and gradients.

The outlets on the double box have an 'eye ball' angular adjustment to help installation in congested trench conditions.

Feature	Double Box
Frame & Cover	Universal 6° tilt 340mm by 260mm. Oval Pluck lid and tether - standard. Glass Filled Polyester DMC. Grade C load bearing according to WIS 4-37-01 reference BS5384-2
Guard Tube Material	Glass Filled Polyester DMC (Dough Moulding Compound)
Guard Tube Profile	270mm by 190mm opening ~ Stadium profile
Height Adjustment (approx)	520/865mm * 30mm final height adjustment in surface box and 25mm guard tube overlap
Frost Protection	Sealed box: As standard in accordance with WIS 4.37.01 * Subject to deletion on request. Unsealed box: None. Please order separately
Water Tightness	Watertight (WIS 4.37.01) OR Unsealed
Shut Off Device	2no. Rising-spindle with key (WIS 4.23.04)
Non Return Valve	In accordance with (WIS 5-11-01) BS EN 13959:2004 Family E Type B
Manifolds	Elevated arrangement in Plastic (Acetal Co-Polymer) secured into DMC nest secured in chamber, pre-plumbed per WIS 4.37.01
Meter Connection	2no. G1.5 (1½" BSP) Concentric meter-ports (typically for meters up to Qn2.5 rating)
Head Loss	< 3 metres @ 25 l/min flowrate with meter in accordance with WIS 4.37.01
Inlet options	32mmPF in accordance with WIS 4.32.11
Outlet	2no. 25mmPF Swivel Eyeball format in accordance with WIS 4.32.11
Blanking Plugs	Full Flow (standard) - 27/28mm tapered A/F hexagonal upstand
Product Weight (approx)	13.5 kg
Pallet Quantity	10 per pallet

ATPLAS
Sealed or Unsealed Double Box

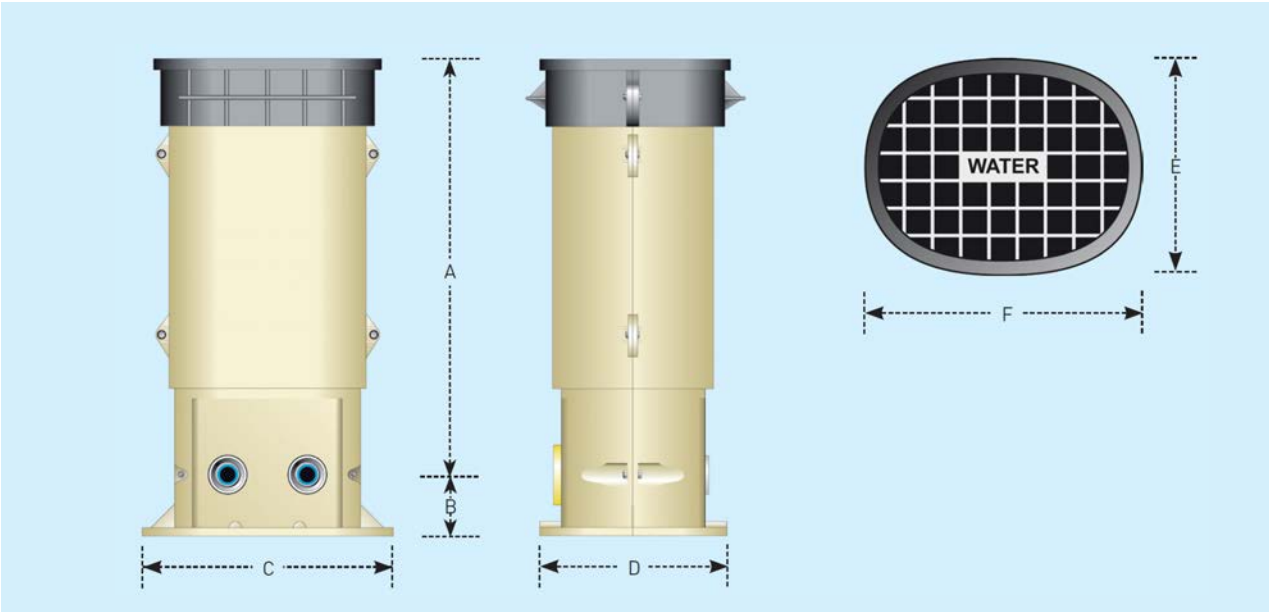

Box	A (min/max)	B	C	D	E	F
ATPLAS	See below	80mm	350 mm	270 mm	225 mm	300 mm

Double box Sealed Telescopic Plastic Raised Manifold

Part Number	Connections	Shut off	Manifold	Height (A)	Lid
APC00396	32mm PF by 2 x 25mm PF	Rising spindle	Plastic - Raised	520/865 mm	Tilting Pluck Lid Frame/Cover
APC00698	32mm PF by 2 x 25mm PF	¼ Turn	Plastic - Raised	520/865 mm	Tilting Pluck Lid Frame/Cover

Double Box Unsealed Telescopic Plastic Raised Manifold

Part Number	Connections	Shut off	Manifold	Height (A)	Lid
DBL01165	32mm PF by 2 x 25mm PF	Rising Spindle	Plastic - Raised	520/865 mm	Tilting Pluck Lid Frame/Cover
DBL01188	32mm PF by 2 x 25mm PF	¼ Turn	Plastic - Raised	520/865 mm	Tilting Pluck Lid Frame/Cover

ATPLAS
Multi-Manifold Box

Benefits

An oblong shaped chamber helps prevent rotation and is intended to transfer any torque resulting from meter installation / removal to the ground around, through the 'flat sides' avoiding impact on service connections.

The Rising-Spindle Stop-valve design helps minimise damage through possible over-tightening, using a piston and bore arrangement with positive stop points and torque failsafe in the key and valve cap. The box is also available with a quarter turn valve instead.

Non-return valve can be replaced in-situ using appropriate tools and with regard for local regulations and working practices.

Water flow is assisted by the DN20 nominal bore through the manifold, with its non-return valve adapted to suit the concentric G1.5 meter interface.

The robust plastic surface box has a load bearing capacity of over 30 kN.

Up to 6° tilt and 38mm of final height adjustment on the surface box allows for easy and accurate alignment with surface levels and gradients.

The outlets on the multimanifold box have an 'eye ball' angular adjustment to help installation in congested trench conditions.

Feature	Multi-manifold
Frame & Cover	Universal 6° tilt 750mm by 200mm. Pluck lid (Lifting Handles incorporated). Glass Filled Polyester DMC. Grade C load bearing according to WIS 4-37-01 reference BS5384-2
Guard Tube Material	Glass Filled Polyester DMC (Dough Moulding Compound)
Guard Tube Profile	700mm by 160mm opening ~ Stadium profile
Height Adjustment (approx)	Sealed: 410mm to 770mm * 38mm final height adjustment in surface box * Height adjusted with 90mm and 180mm Riser sections Unsealed: 410:590mm
Frost Protection	Sealed: As standard in accordance with WIS 4.37.01 Unsealed: No frost protection
Water Tightness	Watertight (WIS 4.37.01) OR Unsealed
Shut Off Device	4 or 6no. Rising-spindle (WIS 4.23.04)
Non Return Valve	In accordance with (WIS 5-11-01) BS EN 13959:2004 E Type B
Manifolds	Elevated arrangement in Plastic (Acetal Co-Polymer) secured into DMC nest secured in chamber, pre-plumbed per WIS 4.37.01
Meter Connection	4 or 6no. G1.5 (1½" BSP) Concentric Meter-port (typically for Meters up to Qn2.5 rating)
Head Loss	< 3 metres @ 25 l/min flowrate with meter in accordance with WIS 4.37.01
Inlet options	2" F BSP threaded Gun-metal
Outlet	4 or 6no. 25mmPF Swivel Eyeball format in accordance with WIS 4.32.11
Blanking Plugs	Full Flow (standard) - 27/28mm tapered A/F hexagonal upstand
Product Weight (approx)	40 - 45 kg
Pallet Quantity	5 per pallet

ATPLAS
Sealed or Unsealed Multi-Manifold Box

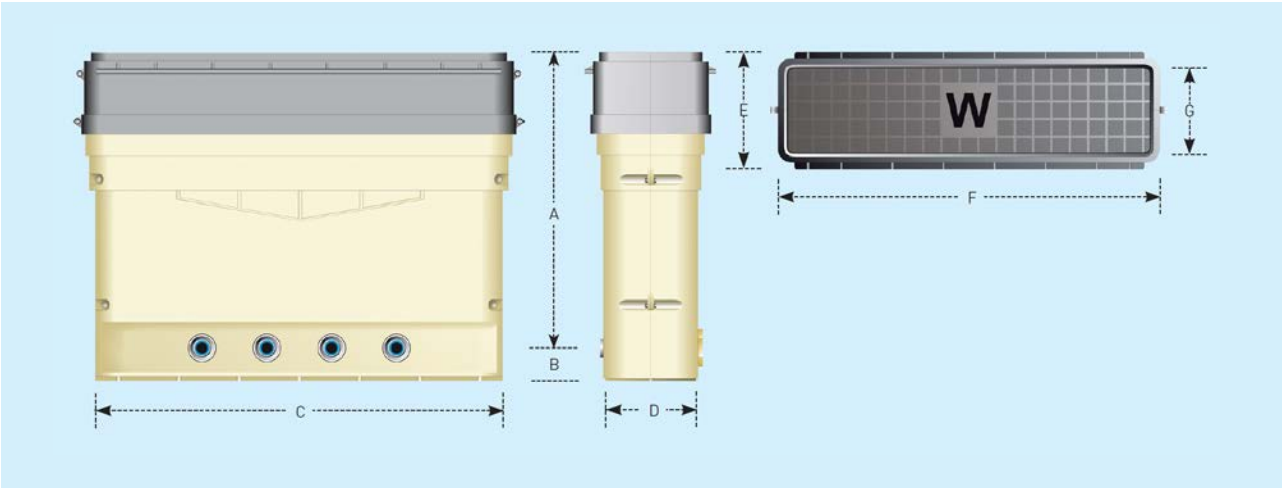

Box	A (min/max)	B	C	D	E	F	G
ATPLAS	See below	70 mm	735 mm	197 mm	286 mm overall	748 mm	202 mm (Top Frame)

4 Port Multi-manifold box Sealed Telescopic Plastic Raised Manifold

Part Number	Connections	Shut off	Manifold	Height (A)	Lid
APC00853	2" BSP Female by 4 x 25mm PF	Rising spindle	4 Port Plastic - Raised	410-770mm	Tilting Pluck Lid Frame/Cover
APC00700	2" BSP Female by 4 x 25mm PF	¼ Turn	4 Port Plastic - Raised	410-770mm	Tilting Pluck Lid Frame/Cover

6 Port Multi-manifold box Sealed Telescopic Plastic Raised Manifold

Part Number	Connections	Shut off	Manifold	Height (A)	Lid
APC00642	2" BSP Female by 6 x 25mm PF	Rising spindle	6 Port Plastic - Raised	410-770mm	Tilting Pluck Lid Frame/Cover
APC00699	2" BSP Female by 6 x 25mm PF	¼ Turn	6 Port Plastic - Raised	410-770mm	Tilting Pluck Lid Frame/Cover

4 Port Multi-Manifold box Unsealed Telescopic Plastic Raised Manifold

Part Number	Connections	Shut off	Manifold	Height (A)	Lid
MUL01166	2" BSP Female by 4 x 25mm PF	Rising spindle	4 Port Plastic - Raised	410-590mm	Tilting Pluck Lid Frame/Cover
MUL01189	2" BSP Female by 4 x 25mm PF	¼ Turn	4 Port Plastic - Raised	410-590mm	Tilting Pluck Lid Frame/Cover

6 Port Multi-Manifold box Unsealed Telescopic Plastic Raised Manifold

Part Number	Connections	Shut off	Manifold	Height (A)	Lid
MUL01167	2" BSP Female by 6 x 25mm PF	Rising spindle	6 Port Plastic - Raised	410-590mm	Tilting Pluck Lid Frame/Cover
MUL01190	2" BSP Female by 6 x 25mm PF	¼ Turn	6 Port Plastic - Raised	410-590mm	Tilting Pluck Lid Frame/Cover

Service Connections

Gunmetal Straps, Ferrules & STFS
Introduction

The EBCO and Talbot ranges of Flat Boss Straps, Swivel Ferrules and Self Tapping Ferrule Straps can be used to connect PE, copper and threaded pipes to almost any type and size of mains pipe.

Benefits

- Available in a range of self tapping ferrule straps and flat boss straps to suit mains pipes from 32mm (1")
- Ferrules are available with ½" to 2" BSP female threads; 15mm to 54mm copper and 16mm- 63mm PE outlets
- Design and selection of materials gives high strength for reliable installation and light weight for easy handling
- Quick and efficient installation onto all common pipe materials in virtually any trench condition, wet or dry
- Prolonged life of the fitting due to the high quality corrosion resistant materials used

Safety

As with all industrial products it is important to take adequate safety precautions such as the use of adequate protective clothing like gloves, overalls, eye protection and safety footwear during installation and maintenance of this product.

Flat Boss Straps

EBCO and Talbot Flat Boss Straps are designed for making service connections into PE, PVC, asbestos cement, cast iron, ductile iron and steel mains. A ferrule can then be connected to the main via the strap boss using drilling and tapping equipment whilst the main is pressurised or dry. The flat boss strap range provides maximum thread engagement into the boss of the strap and tappings from ½" to 2" can be made into most flat boss straps. Alternatively, the strap can be pre-drilled, tapped and fitted with a ferrule prior to delivery and the wall of the pipe then simply drilled using under pressure drilling equipment.

Solid flat boss straps can also be used as blanking straps for sealing existing holes in mains after removal of a ferrule. These flat boss straps are made from corrosion resistant materials to give years of trouble free service.

Note: flat boss straps can be supplied with a 3/8" pilot hole through the boss to help the drilling and tapping process.

- Quick and simple to install

  Quick, permanent, leak free connection provided by a tried and tested design
- Extensive Range

  A range has been developed which enables the user to make connections to almost any type of mains pipe, either under pressure or dry
- Robust and long lasting

  Straps made from gunmetal are immune to corrosion and so give years of trouble free service
- Reliable and leak free

  Provides maximum thread engagement for leak free connections suitable for a working pressure up to 16 bar (240 psi)

Gunmetal Straps, Ferrules & STFS

Swivel Ferrules

EBCO and Talbot Swivel Ferrules provide a quick, permanent, leak free service connection, consisting of a stem with an inner plug for valve isolation and a 360° swivel outlet at 90° to the stem. The swivel outlet provides a direct connection to the service line via an integral joint in the ferrule banjo so no adaptor is needed. These ferrules will provide service connections dry or under pressure directly into cast iron, ductile iron and steel mains. Asbestos cement, PE and PVC mains can also be tapped via a Flat Boss Strap.

- Quick and simple to install

  Quick, permanent, leak free connection provided by a tried and tested design

- Extensive Range

  A range has been developed which enables the user to make connections to almost any type of mains pipe and service pipe, either under pressure or dry

- Robust and long lasting

  These ferrules can provide years of service in even the most aggressive soil conditions

- Reliable and leak free

  Specifically designed to operate at pressures up to 16 bar (240 psi) subject to the ratings of pipe and strap if used.

Self Tapping Ferrule Straps

EBCO and Talbot Self Tapping Ferule Straps for PE, PVC and asbestos cement mains pipes incorporate an integral ferrule with a self contained cutter, eliminating the need for drilling machines. Straps are made from gunmetal or a combination of gunmetal and plastic making the product durable and corrosion resistant. The strap also uses a specially designed cutter, which tests show greatly reduces the risk of bursting a PE/PVC main or creating a swarf blockage whilst cutting.

- No special equipment or controlled conditions needed

  The fitting has an integrated cutter and requires only a spanner or standard ferrule key to install and carry out the drilling operation, dry or under pressure and in wet and congested trench conditions making it a viable alternative to electrofusion.

- Integral cutter

  The integral cutter is designed to greatly reduce the risk of fracturing PE/PVC pipe during the drilling procedure. Its design also reduces the chance of swarf blockage whilst tapping by retaining the PE/PVC slug. The cutter also provides a shut off facility once the tapping has been made.

- Range of outlets

  Self Tapping Ferrule Straps can be supplied with a variety of banjo outlet types to suit copper, male threaded and PE pipe (both barrier pipe for use in contaminated land sites and conventional PE pipe).

Gunmetal Straps, Ferrules & STFS
Technical Data

Working Pressure[1] :	Up to 16 bar (240 psi)		
Temperature[2] :	Up to 40°C		
Sizes	Mains Pipe:	From 32mm (1")	
	Stems:	½" - 2"	
	Outlets:	Female threaded	½" - 2"
		EBCO Pushfit/Talbot Pushfit for PE	20mm (½") to 63mm (2")
		Compression for PE	20mm (½") to 63mm (2")
		Compression for copper	15mm to 54mm
Materials:	Metals:	Gunmetal to BS EN 1982:2008 CC491K (formerly BS1400 LG2)	
		Aluminium Bronze to BS EN 1982:2008 CC331G	
	Plastics:	Acetal or Polypropylene	
	Fasteners:	Stainless Steel (A2 and A4)	
	Seals:	Nitrile or EPDM rubber	

[1] The pressure stated above applies with water temperatures up to 20°C.
[2] For further information relating to operating temperatures please contact our Customer Service department on the telephone number shown below.

Technical Help:

For further technical data, product specifications and general information please contact Customer Service on +44 (0)845 077 9797.

Flat Boss Saddle
Asbestos Cement / Cast Iron Pipe

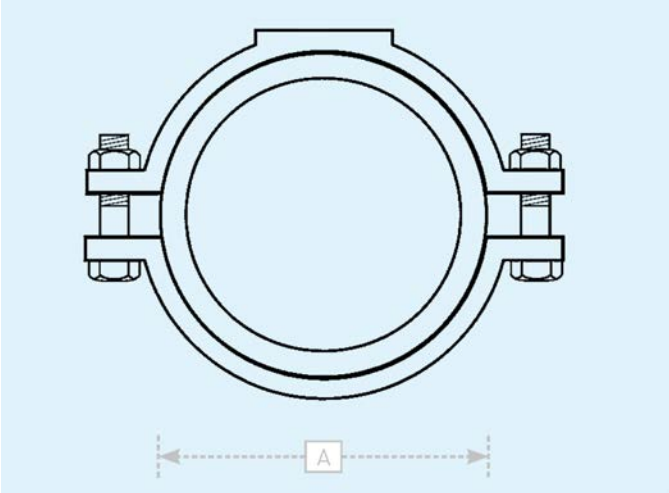

Imperial Pipe Sizes

Part Number	Nominal Pipe Bore	Strap Size (A)	Tapping Size	Box Quantity	Weight (Kg each)
SBFA015T0	1 ½" (40mm)	55 - 61mm	Undrilled		
SBFA015T2	1 ½" (40mm)	55 - 61mm	½" BSP		
SBFA002T0	2" (50mm)	62 - 74mm	Undrilled		1.158
SBFA002T2	2" (50mm)	62 - 74mm	½" BSP		
SBFA002T3	2" (50mm)	62 - 74mm	¾" BSP	10	1.172
SBFA002T4	2" (50mm)	62 - 74mm	1" BSP		1.309
SBFA003T0	3" (80mm)	96 - 101mm	Undrilled		0.996
SBFA003T2	3" (80mm)	96 - 101mm	½" BSP		
SBFA003T3	3" (80mm)	96 - 101mm	¾" BSP	10	0.952
SBFA003T4	3" (80mm)	96 - 101mm	1" BSP		
SBFA004T0	4" (100mm)	122 - 130mm	Undrilled	10	
SBFA004T2	4" (100mm)	122 - 130mm	½" BSP		
SBFA004T3	4" (100mm)	122 - 130mm	¾" BSP	10	1.318
SBFA004T4	4" (100mm)	122 - 130mm	1" BSP		1.295
SBFA005T0	5" (125mm)	144 - 154mm	Undrilled		1.493
SBFA005T2	5" (125mm)	144 - 154mm	½" BSP		
SBFA005T3	5" (125mm)	144 - 154mm	¾" BSP		1.410
SBFA005T4	5" (125mm)	144 - 154mm	1" BSP		
SBFA006T0	6" (150mm)	177 - 185mm	Undrilled		
SBFA006T2	6" (150mm)	177 - 185mm	½" BSP		
SBFA006T3	6" (150mm)	177 - 185mm	¾" BSP	8	
SBFA006T4	6" (150mm)	177 - 185mm	1" BSP		1.852
SBFA006T5	6" (150mm)	177 - 185mm	1¼" BSP		
SBFA007T0	7" (175mm)	200 - 210mm	Undrilled		1.910
SBFA007T4	7" (175mm)	200 - 210mm	1" BSP		
SBFA008T0	8" (200mm)	229 - 237mm	Undrilled		1.767
SBFA008T2	8" (200mm)	229 - 237mm	½" BSP		
SBFA008T3	8" (200mm)	229 - 237mm	¾" BSP	5	
SBFA008T4	8" (200mm)	229 - 237mm	1" BSP	4	
SBFA009T0	9" (225mm)	256 - 284mm	Undrilled		
SBFA009T3	9" (225mm)	256 - 284mm	¾" BSP	4	2.189
SBFA009T4	9" (225mm)	256 - 284mm	1" BSP	4	
SBFA010T0	10" (250mm)	286 - 294mm	Undrilled		2.235
SBFA010T2	10" (250mm)	286 - 294mm	½" BSP		
SBFA010T3	10" (250mm)	286 - 294mm	¾" BSP	3	2.223
SBFA010T4	10" (250mm)	286 - 294mm	1" BSP	3	
SBFA012T2	12" (300mm)	344 - 352mm	½" BSP		
SBFA012T3	12" (300mm)	344 - 352mm	¾" BSP		
SBFA012T4	12" (300mm)	344 - 352mm	1" BSP		

Flat Boss Saddle
Asbestos Cement / Cast Iron Pipe

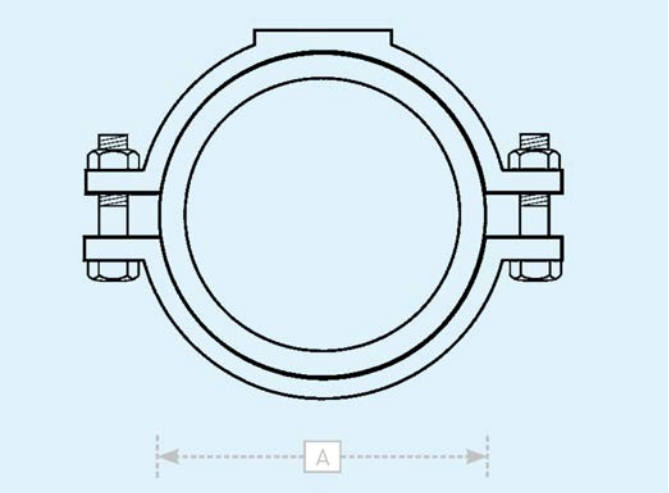

Imperial Pipe Sizes

Part Number	Nominal Pipe Bore	Strap Size (A)	Tapping Size	Box Quantity	Weight (Kg each)
E8776	1 ½" (40mm)	55 - 61mm	½" BSP		
E3195	2" (50mm)	62 - 74mm	½" BSP		
E3196	2" (50mm)	62 - 74mm	¾" BSP		
E7798	2" (50mm)	62 - 74mm	1" BSP		
E3209	3" (80mm)	96 - 101mm	Undrilled		
E4276	3" (80mm)	96 - 101mm	½" BSP		
E3231	3" (80mm)	96 - 101mm	¾" BSP	12	
E3239	3" (80mm)	96 - 101mm	1" BSP		
E4191	3" (80mm)	96 - 101mm	1½" BSP		
E3211	4" (100mm)	122 - 130mm	Undrilled	10	1.374
E3223	4" (100mm)	122 - 130mm	½" BSP	10	
E3233	4" (100mm)	122 - 130mm	¾" BSP		
E3251	4" (100mm)	122 - 130mm	1½" BSP		
E6101	4" (100mm)	122 - 130mm	2" BSP		
E3214	6" (150mm)	177 - 185mm	Undrilled	6	1.620
E4688	6" (150mm)	177 - 185mm	½" BSP		1.505
E3235	6" (150mm)	177 - 185mm	¾" BSP	6	
E3244	6" (150mm)	177 - 185mm	1" BSP		
E3253	6" (150mm)	177 - 185mm	1½" BSP		
E4568	8" (200mm)	229 - 237mm	Undrilled	5	1.807
E8961	8" (200mm)	229 - 237mm	1" BSP		
E3216*	8" (200mm)	238 - 246mm	Undrilled		
E3227*	8" (200mm)	238 - 246mm	½" BSP		
E4691*	8" (200mm)	238 - 246mm	¾" BSP		
E3246*	8" (200mm)	238 - 246mm	1" BSP		
E4724*	8" (200mm)	238 - 246mm	1½" BSP		
E3217	9" (225mm)	250 - 258mm	Undrilled		
E11171	9" (225mm)	250 - 258mm	¾" BSP		
E9248	9" (225mm)	250 - 258mm	1" BSP		
E9495	9" (225mm)	250 - 258mm	1½" BSP		
E3218*	9" (225mm)	268 - 276mm	Undrilled	3	
E3228*	9" (225mm)	268 - 276mm	½" BSP		
E3237*	9" (225mm)	268 - 276mm	¾" BSP		
E3247*	9" (225mm)	268 - 276mm	1" BSP		
E8949*	9" (225mm)	268 - 276mm	1 ¼" BSP		
E3255*	9" (225mm)	268 - 276mm	1½" BSP		
E6289*	9" (225mm)	268 - 276mm	2" BSP		
E3193*	10" (250mm)	294 - 302mm	Undrilled		
E10316*	10" (250mm)	294 - 302mm	½" BSP		
E4088*	10" (250mm)	294 - 302mm	¾" BSP		
E7811*	10" (250mm)	294 - 302mm	1" BSP		
E8103*	10" (250mm)	294 - 302mm	2" BSP		
E3220	12" (300mm)	344 - 352mm	Undrilled	5	2.796

Flat Boss Saddle
Asbestos Cement / Cast Iron Pipe

Imperial Pipe Sizes (continued)

Part Number	Nominal Pipe Bore	Strap Size (A)	Tapping Size	Box Quantity	Weight (Kg each)
E11269	12" (300mm)	344 - 352mm	½" BSP		
E7803	12" (300mm)	344 - 352mm	¾" BSP		
E7810	12" (300mm)	344 - 352mm	1" BSP		
E7087	12" (300mm)	344 - 352mm	2" BSP		
E4864+	14" (350mm)		Undrilled		

** Metric Asbestos Cement Pipe Class 25*
+ Imperial Asbestos Cement Pipe Class C/D

Flat Boss Saddle
Ductile Iron Pipe

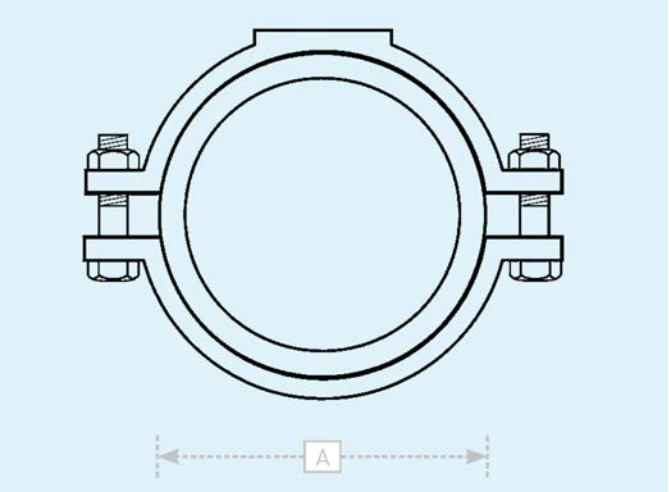

Imperial Pipe Sizes

Part Number	Nominal Pipe Bore	Strap Size (A)	Tapping Size	Box Quantity	Weight (Kg each)
SBFD080	3" (80mm)	96 - 101mm	Undrilled		
SBFD080T2	3" (80mm)	96 - 101mm	½" BSP		
SBFD080T3	3" (80mm)	96 - 101mm	¾" BSP		
SBFA003T4	3" (80mm)	96 - 101mm	1" BSP		
SBFD100	4" (100mm)	110 - 118mm	Undrilled	10	
SBFD100T2	4" (100mm)	110 - 118mm	½" BSP		
SBFD100T3	4" (100mm)	110 - 118mm	¾" BSP		
SBFP004T4	4" (100mm)	110 - 118mm	1" BSP		
SBFP005T0	5" (125mm)	135 - 147mm	Undrilled		
SBFP005T3	5" (125mm)	135 - 147mm	¾" BSP	10	
SBFP006T0	6" (150mm)	165 - 173mm	Undrilled	6	1.62
SBFP006T2	6" (150mm)	165 - 173mm	½" BSP		
SBFP006T3	6" (150mm)	165 - 173mm	¾" BSP	8	1.48
SBFP006T4	6" (150mm)	165 - 173mm	1" BSP		1.53
SBFP008T0	8" (200mm)	217 - 255mm	Undrilled	6	
SBFP008T2	8" (200mm)	217 - 255mm	½" BSP		1.774
SBFP008T3	8" (200mm)	217 - 255mm	¾" BSP		1.731
SBFP008T4	8" (200mm)	217 - 255mm	1" BSP		1.820
SBFP010T0	10" (250mm)	268 - 276mm	Undrilled	4	
SBFP010T2	10" (250mm)	268 - 276mm	½" BSP		
SBFP010T3	10" (250mm)	268 - 276mm	¾" BSP		2.603
SBFP010T4	10" (250mm)	268 - 276mm	1" BSP		2.443
SBFP012T0	12" (300mm)	322 - 330mm	Undrilled	8	2.133
SBFP012T2	12" (300mm)	322 - 330mm	½" BSP		
SBFP012T3	12" (300mm)	322 - 330mm	¾" BSP		2.150
SBFP012T4	12" (300mm)	322 - 330mm	1" BSP		2.094

Flat Boss Saddle
Ductile Iron Pipe

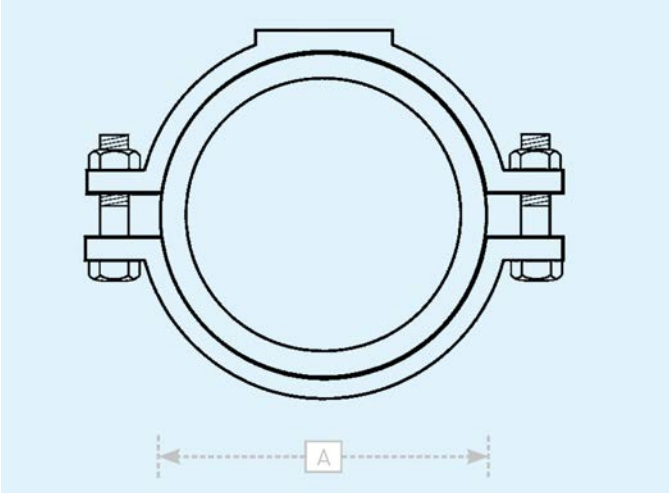

Imperial Pipe Sizes

Part Number	Nominal Pipe Bore	Strap Size (A)	Tapping Size	Box Quantity	Weight (Kg each)
E3209	3" (80mm)	96 - 101mm	Undrilled		
E4276	3" (80mm)	96 - 101mm	½" BSP		
E3231	3" (80mm)	96 - 101mm	¾" BSP		
E3239	3" (80mm)	96 - 101mm	1" BSP		
E4191	3" (80mm)	96 - 101mm	1½" BSP		
E3210	4" (100mm)	110 - 118mm	Undrilled		1.37
E3222	4" (100mm)	110 - 118mm	½" BSP		1.20
E3232	4" (100mm)	110 - 118mm	¾" BSP		
E3240	4" (100mm)	110 - 118mm	1" BSP		
E7685	4" (100mm)	110 - 118mm	1¼" BSP		
E3250	4" (100mm)	110 - 118mm	1½" BSP		
E3256	4" (100mm)	110 - 118mm	2" BSP		1.07
E3213	6" (150mm)	165 - 173mm	Undrilled		
E3225	6" (150mm)	165 - 173mm	½" BSP		
E3234	6" (150mm)	165 - 173mm	¾" BSP		
E3243	6" (150mm)	165 - 173mm	1" BSP		
E3993	6" (150mm)	165 - 173mm	1¼" BSP		
E3257	6" (150mm)	165 - 173mm	2" BSP		
E3215	8" (200mm)	217 - 225mm	Undrilled		1.77
E3226	8" (200mm)	217 - 225mm	½" BSP		
E3236	8" (200mm)	217 - 225mm	¾" BSP		
E3245	8" (200mm)	217 - 225mm	1" BSP		
E5230	8" (200mm)	217 - 225mm	1¼" BSP		
E3254	8" (200mm)	217 - 225mm	1½" BSP		
E3258	8" (200mm)	217 - 225mm	2" BSP		
E3218	10" (250mm)	268 - 276mm	Undrilled		
E3228	10" (250mm)	268 - 276mm	½" BSP		
E3237	10" (250mm)	268 - 276mm	¾" BSP		2.60
E3247	10" (250mm)	268 - 276mm	1" BSP		2.44
E8949	10" (250mm)	268 - 276mm	1¼" BSP		
E3255	10" (250mm)	268 - 276mm	1½" BSP		
E6289	10" (250mm)	268 - 276mm	2" BSP		
E3219	12" (300mm)	322 - 330mm	Undrilled		2.36
E3229	12" (300mm)	322 - 330mm	½" BSP		
E4205	12" (300mm)	322 - 330mm	¾" BSP		
E3248	12" (300mm)	322 - 330mm	1" BSP		
E4588	12" (300mm)	322 - 330mm	1¼" BSP		
E4861	12" (300mm)	322 - 330mm	1½" BSP		
E11445	12" (300mm)	322 - 330mm	2" BSP		
E11443	14" (350mm)	373 - 381mm	Undrilled		
E4064	16" (400mm)	429 - 439mm	Undrilled		4.11
E7188	16" (400mm)	429 - 439mm	1"BSP		
E11480	20" (500mm)	532 - 540mm	Undrilled		
E11442	24" (600mm)	630 - 637mm	Undrilled		

Flat Boss Saddle
PE/PVC Pipe

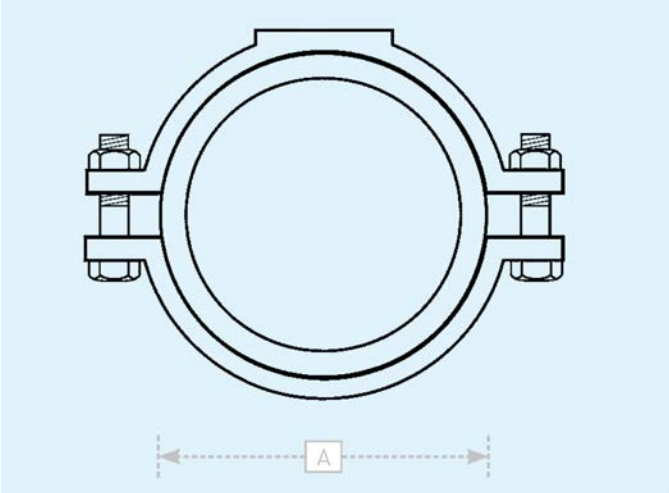

Imperial Pipe Sizes

Part Number	Nominal Pipe Bore	Strap Size (A)	Tapping Size	Box Quantity	Weight (Kg each)
SBFP00015T0	1½" (40mm)	45 - 52mm	Undrilled		
SBFP00015T2	1½" (40mm)	45 - 52mm	½" BSP		
SBFP00015T3	1½" (40mm)	45 - 52mm	¾" BSP		
SBFP002T0	2" (50mm)	58 - 62mm	Undrilled		
SBFP002T2	2" (50mm)	58 - 62mm	½" BSP		0.676
SBFP002T3	2" (50mm)	58 - 62mm	¾" BSP		
SBFP002T4	2" (50mm)	58 - 62mm	1" BSP		
SBFP003T0	3" (80mm)	88 - 92mm	Undrilled	15	1.000
SBFP003T2	3" (80mm)	88 - 92mm	½" BSP		
SBFP003T3	3" (80mm)	88 - 92mm	¾" BSP		1.093
SBFP004T0	4" (100mm)	110 - 118mm	Undrilled	10	1.292
SBFP004T2	4" (100mm)	110 - 118mm	½" BSP		
SBFP004T3	4" (100mm)	110 - 118mm	¾" BSP		
SBFP004T4	4" (100mm)	110 - 118mm	1" BSP		
SBFP005T0	5" (125mm)	135 - 147mm	Undrilled		
SBFP005T3	5" (125mm)	135 - 147mm	¾" BSP	10	
SBFP006T0	6" (150mm)	165 - 173mm	Undrilled	6	1.621
SBFP006T2	6" (150mm)	165 - 173mm	½" BSP		
SBFP006T3	6" (150mm)	165 - 173mm	¾" BSP	8	1.475
SBFP006T4	6" (150mm)	165 - 173mm	1" BSP		1.528
SBFP008T0	8" (200mm)	217 - 225mm	Undrilled	6	
SBFP008T2	8" (200mm)	217 - 225mm	½" BSP		1.774
SBFP008T3	8" (200mm)	217 - 225mm	¾" BSP		1.731
SBFP008T4	8" (200mm)	217 - 225mm	1" BSP		1.820
SBFP009T0	9" (225mm)	238 - 246mm	Undrilled		
SBFP009T3	9" (225mm)	238 - 246mm	¾" BSP	4	2.384
SBFP009T4	9" (225mm)	238 - 246mm	1" BSP		
SBFP010T0	10" (250mm)	268 - 276mm	Undrilled	4	
SBFP010T2	10" (250mm)	268 - 276mm	½" BSP		
SBFP010T3	10" (250mm)	268 - 276mm	¾" BSP		2.603
SBFP010T4	10" (250mm)	268 - 276mm	1" BSP		2.443
SBFP012T0	12" (300mm)	322 - 330mm	Undrilled	8	2.133
SBFP012T2	12" (300mm)	322 - 330mm	½" BSP		
SBFP012T3	12" (300mm)	322 - 330mm	¾" BSP		2.150
SBFP012T4	12" (300mm)	322 - 330mm	1" BSP		2.094
SBFP014T0	14" (350mm)	351 - 359mm	Undrilled		3.042

Flat Boss Saddle
PE/PVC Pipe

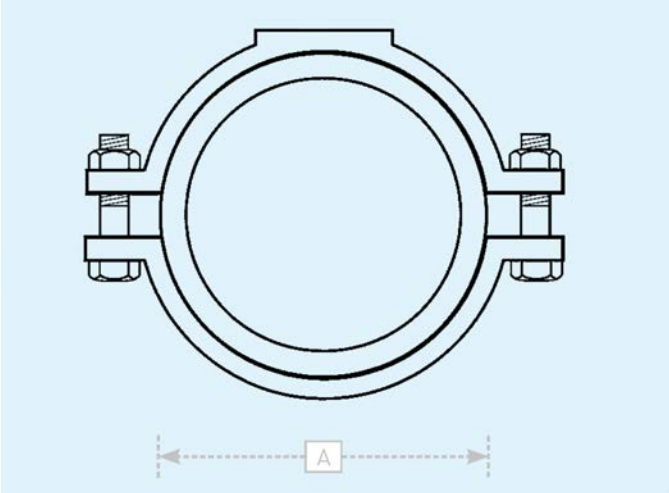

Imperial Pipe Sizes

Part Number	Nominal Pipe Bore	Strap Size (A)	Tapping Size	Box Quantity	Weight (Kg each)
E3282	2" (50mm)	58 - 62mm	Undrilled		
E3284	2" (50mm)	58 - 62mm	¾" BSP		
E3208	3" (80mm)	88 - 92mm	Undrilled	16	
E3221	3" (80mm)	88 - 92mm	½" BSP		
E3230	3" (80mm)	88 - 92mm	¾" BSP		
E3238	3" (80mm)	88 - 92mm	1" BSP		
E9156	3" (80mm)	88 - 92mm	1 ¼ " BSP		
E3249	3" (80mm)	88 - 92mm	1 ½ " BSP		
E3210	4" (100mm)	110 - 118mm	Undrilled	10	1.366
E3222	4" (100mm)	110 - 118mm	½" BSP		1.201
E3232	4" (100mm)	110 - 118mm	¾" BSP		
E3240	4" (100mm)	110 - 118mm	1" BSP	10	
E7685	4" (100mm)	110 - 118mm	1 ¼ " BSP		
E3250	4" (100mm)	110 - 118mm	1 ½ " BSP		
E3256	4" (100mm)	110 - 118mm	2" BSP	10	1.065
E3213	6" (150mm)	165 - 173mm	Undrilled	8	
E3225	6" (150mm)	165 - 173mm	½" BSP		
E3234	6" (150mm)	165 - 173mm	¾" BSP		
E3243	6" (150mm)	165 - 173mm	1" BSP	8	
E3993	6" (150mm)	165 - 173mm	1 ¼ " BSP		
E3257	6" (150mm)	217 - 225mm	2" BSP		
E3215	8" (200mm)	217 - 225mm	Undrilled	5	1.768
E3226	8" (200mm)	217 - 225mm	½" BSP		
E3236	8" (200mm)	217 - 225mm	¾" BSP		
E3245	8" (200mm)	217 - 225mm	1" BSP	10	
E5230	8" (200mm)	217 - 225mm	1 ¼ " BSP		
E3254	8" (200mm)	217 - 225mm	1 ½ " BSP		
E3258	8" (200mm)	217 - 225mm	2" BSP		
E3216	9" (225mm)	238 - 246mm	Undrilled		
E3227	9" (225mm)	238 - 246mm	½" BSP		
E4691	9" (225mm)	238 - 246mm	¾" BSP		
E3246	9" (225mm)	238 - 246mm	1" BSP		
E4724	9" (225mm)	238 - 246mm	1 ½" BSP		
E3218	10" (250mm)	268 - 276mm	Undrilled	3	
E3228	10" (250mm)	268 - 276mm	½" BSP		
E3237	10" (250mm)	268 - 276mm	¾" BSP		2.443
E3247	10" (250mm)	268 - 276mm	1" BSP		
E8949	10" (250mm)	268 - 276mm	1 ¼ " BSP		
E3255	10" (250mm)	268 - 276mm	1 ½ " BSP		
E6289	10" (250mm)	268 - 276mm	2" BSP		2.355

Flat Boss Saddle
PE/PVC Pipe

Imperial Pipe Sizes (continued)

Part Number	Nominal Pipe Bore	Strap Size (A)	Tapping Size	Box Quantity	Weight (Kg each)
E3219	12" (300mm)	322 - 330mm	Undrilled		
E3229	12" (300mm)	322 - 330mm	½" BSP		
E4205	12" (300mm)	322 - 330mm	¾ " BSP		
E3248	12" (300mm)	322 - 330mm	1" BSP		
E4588	12" (300mm)	322 - 330mm	1 ¼ " BSP		
E4861	12" (300mm)	322 - 330mm	1 ½ " BSP		

Metric Pipe Sizes

Part Number	Nominal Pipe Bore	Strap Size (A)	Tapping Size	Box Quantity	Weight (Kg each)
E3212	160mm	155 - 163mm	Undrilled		
E3224	160mm	155 - 163mm	½" BSP	8	
E4697	160mm	155 - 163mm	¾" BSP		
E3242	160mm	155 - 163mm	1" BSP		
E9494	160mm	155 - 163mm	1 ¼ " BSP		
E3252	160mm	155 - 163mm	1 ½ " BSP		
E10275	160mm	155 - 163mm	2 " BSP		
E4569	180mm	174 - 182mm	Undrilled		
E4679	180mm	174 - 182mm	¾" BSP		
E8788	180mm	174 - 182mm	1" BSP		
E8789	180mm	174 - 182mm	1 ½ " BSP		
E4996	180mm	174 - 182mm	2" BSP		
E10496	200mm	195 - 203mm	Undrilled		
E10269	200mm	195 - 203mm	1 ½ " BSP		
E9347	200mm	195 - 203mm	2" BSP		
E7971	315mm	308 - 316mm	Undrilled		
E9231	315mm	308 - 316mm	¾" BSP		
E4839	315mm	308 - 316mm	1" BSP		
E10270	315mm	308 - 316mm	1 ½ " BSP		

EBCO Standard Pattern Swivel Ferrule BSP Outlet

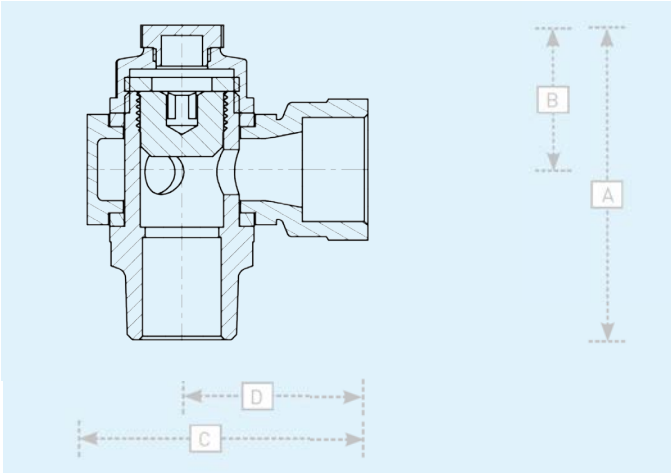

Gunmetal Banjo, EBCO BSP female outlet

Part Number	Inlet	Outlet	A (mm)	B (mm)	C (mm)	D (mm)	Box Quantity	Weight (Kg each)
SFR202F	½"	½" Female	86	38	62	40	25	0.178
SFR302F	¾"	½" Female						
SFR303F	¾"	¾" Female	82	38	66	43	20	0.478
SFR9D03F	¾"	2 x ¾" Female (90°)					15	
SFR304F	¾"	1" Female						
SFR404F	1"	1" Female	94	44	82	54	12	0.748
SFR505F	1 ¼"	1 ¼" Female	107	50	102	68		
SFR606F	1 ½ "	1 ½ " Female	106	50	118	77	4	2.405
SFR808F	2"	2" Female	120	48	140	92	3	3.240

EBCO Standard Pattern Swivel Ferrule Pushfit Outlet

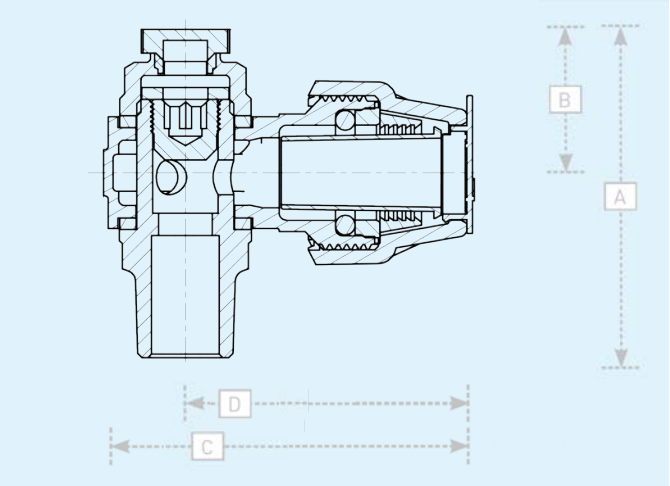

Gunmetal Banjo, EBCO Pushfit outlet for metric MDPE pipe

Part Number	Inlet	Outlet	A (mm)	B (mm)	C (mm)	D (mm)	Box Quantity	Weight (Kg each)
SFR220Z	½"	20mm BPF	86	38	84	61	20	0.475
SFR225Z	½"	25mm BPF	88	35	99	77	15	0.544
SFR325Z	¾"	25mm BPF	82	38	100	79	15	0.551
SFR432Z	1"	32mm BPF	94	44	122	94	10	0.537
SFR650Z	1 ½ "	50mm BPF	106	50	195	154	4	2.780
SFR863Z	2"	63mm BPF	120	48	219	172	5	3.660

Plastic Banjo, EBCO Pushfit outlet for metric MDPE pipe

Part Number	Inlet	Outlet	A (mm)	B (mm)	C (mm)	D (mm)	Box Quantity	Weight (Kg each)
SFR225Z/P	½"	25mm BPF	86	35	105	80	15	0.315
SFR325Z/P	¾"	25mm BPF	82	38	100	79	15	0.319
SFR432Z/P	1"	32mm BPF	94	44	122	94	10	0.532

EBCO Standard Pattern Swivel Ferrule B Compression Fitting Outlet

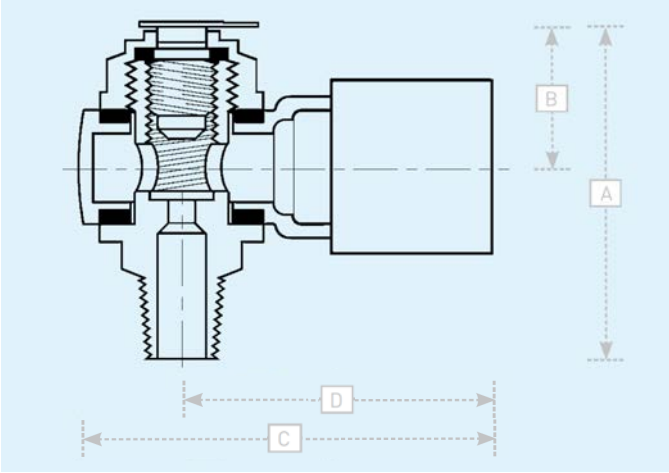

Gunmetal Banjo, EBCO-B outlet

Part Number	Inlet	Outlet	A (mm)	B (mm)	C (mm)	D (mm)	Box Quantity	Weight (Kg each)
SFR220B	½"	20mm EBCO-B	86	38	74	52		
SFR325B	¾"	25mm EBCO-B	82	38	87	62		
SFR432B	1"	32mm EBCO-B	94	44	95	67		
SFR650B	1 ½"	50mm EBCO-B	106	50	143	102		
SFR663B	1½ "	63mm EBCO-B	106	50	138	97	4	3.273
SFR863B	2"	63mm EBCO-B	120	48	159	112		

EBCO Standard Pattern Swivel Ferrule S Compression Fitting Outlet

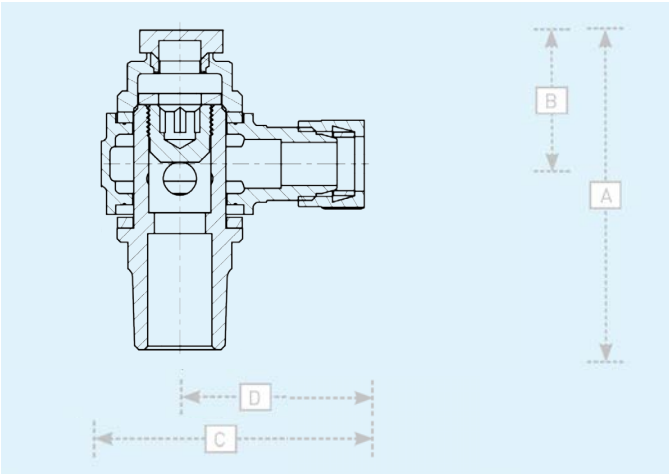

Gunmetal Banjo, EBCO-S compression fitting outlet for type B copper tube

Part Number	Inlet	Outlet	A (mm)	B (mm)	C (mm)	D (mm)	Box Quantity	Weight (Kg each)
SFR215S	½"	15mm Copper	86	38	77	54		0.474
SFR222S	½"	22mm Copper						
SFR315S	¾"	15mm Copper						
SFR322S	¾"	22mm Copper	82	38	78	55	20	0.501
SFR328S	¾"	28mm Copper						
SFR428S	1"	28mm Copper	94	44	92	64	12	0.819
SFR535S	1 ¼"	35mm Copper	107	50	112	78		
SFR642S	1 ½ "	42mm Copper	106	50	127	86		
SFR854S	2"	54mm Copper	120	48	142	95		

TALBOT Standard Pattern Swivel Ferrule Pushfit Outlet - Gunmetal Banjo

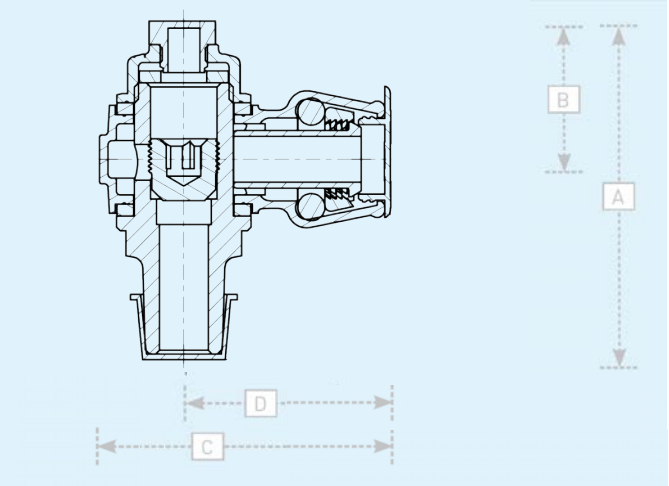

Gunmetal Banjo, Metric MDPE Pushfit outlet with liner

Part Number	Inlet	Outlet	A (mm)	B (mm)	C (mm)	D (mm)	Box Quantity	Weight (Kg each)
E2885	½"	20mm PF	90	38	76	54	20	
E2887	½"	25mm PF	90	38	83	61		
E2888	¾"	25mm PF	88	38	83	61	15	
E2890	1"	32mm PF	87	38	107	79	10	
E2891	1 ½"	50mm PF	126	55	171	131		2.639
E2892	1 ½"	63mm PF	127	57	198	152		
E2893	2"	63mm PF	127	57	198	152		

Gunmetal Banjo, Metric MDPE Pushfit outlet with no liner

Part Number	Inlet	Outlet	A (mm)	B (mm)	C (mm)	D (mm)	Box Quantity	Weight (Kg each)
E2879	½"	20mm PF	90	38	76	54	20	
E2880	¾"	25mm PF	88	38	83	61	15	
E2881	1"	32mm PF	87	38	107	79		
E10108	1 ¼"	40mm PF	116	50	144	110		
E4455	1 ½"	50mm PF	126	55	171	131		0.821
E9212	1 ½"	63mm PF	127	57	198	152		
E4877	2"	63mm PF	127	57	198	152	3	

Gunmetal Banjo, Metric MDPE Pushfit outlet, no liner with gunmetal top threaded plug

Part Number	Inlet	Outlet	A (mm)	B (mm)	C (mm)	D (mm)	Box Quantity	Weight (Kg each)
E10261	½"	20mm PF	87	35	76	54	20	
E10262	¾"	25mm PF	85	35	83	61		
E10263	1"	32mm PF	89	40	107	79		
E10264	1 ½"	50mm PF	124	54	171	131		0.474
E10265	2"	63mm PF	126	56	198	152		0.804

Gunmetal Banjo, Imperial PE Pushfit outlet with no liner

Part Number	Inlet	Outlet	A (mm)	B (mm)	C (mm)	D (mm)	Box Quantity	Weight (Kg each)
E8599	½"	½" PF	90	38	76	54		
E2877	½"	¾" PF	90	38	83	61		
E4137	¾"	½" PF	88	38	76	54		
E2876	¾"	¾" PF	88	38	83	61		0.474
E3774	1"	1" PF	87	38	107	79		0.804
E9215	2"	2" PF	127	57	198	152		

Gunmetal Banjo, Heavy Gauge IRS135 MDPE pipe outlet with no liner

Part Number	Inlet	Outlet	A (mm)	B (mm)	C (mm)	D (mm)	Box Quantity	Weight (Kg each)
E2878	½"	½" HG	90	38	76	54	20	
E5948	¾"	½" HG	88	38	76	54		

TALBOT Standard Pattern Swivel Ferrule Pushfit Outlet - Plastic Banjo

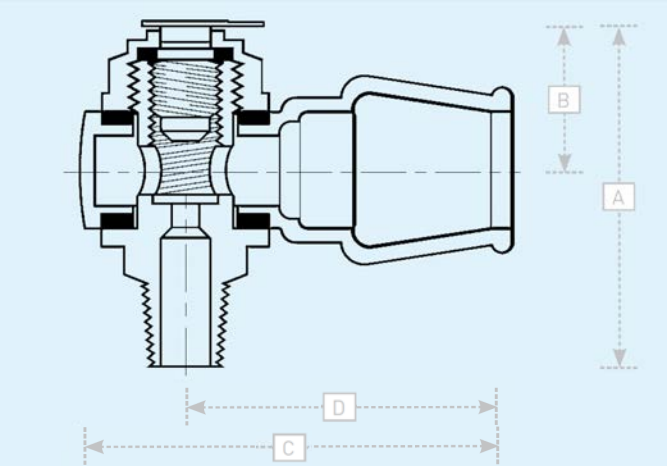

Plastic Banjo, Metric MDPE Pushfit outlet with liner

Part Number	Inlet	Outlet	A (mm)	B (mm)	C (mm)	D (mm)	Box Quantity	Weight (Kg each)
E3835	½"	20mm PF	83	32	97	73	18	0.303
E3961	½"	25mm PF	83	32	103	79	15	0.305
E3964	¾"	25mm PF	83	32	103	79	15	0.317
E3870	¾"	32mm PF	90	39	115	88	10	0.416
E3871	1"	32mm PF	94	44	115	88	10	0.455

Plastic Banjo, Metric MDPE Pushfit outlet, liner with gunmetal top cap

Part Number	Inlet	Outlet	A (mm)	B (mm)	C (mm)	D (mm)	Box Quantity	Weight (Kg each)
E8551	1 ¼"	40mm PF	107	51	144	110		
E6540	1 ½"	50mm PF	122	56	173	131	5	1.779
E6541	1 ½"	63mm PF	126	57	201	152		
E6542	2"	63mm PF	126	57	201	152	3	2.464

Plastic Banjo, Imperial PE Pushfit outlet with no liner

Part Number	Inlet	Outlet	A (mm)	B (mm)	C (mm)	D (mm)	Box Quantity	Weight (Kg each)
E6067	½"	½" PF	83	32	97	73		
E3967	½"	¾" PF	83	32	103	79		
E3968	¾"	¾" PF	83	32	103	79		
E3901	1"	1" PF	94	44	115	88		

Plastic Banjo, Heavy Gauge IRS135 MDPE Pushfit outlet with no liner

Part Number	Inlet	Outlet	A (mm)	B (mm)	C (mm)	D (mm)	Box Quantity	Weight (Kg each)
E3837	½"	½" HG	83	32	97	73	18	0.297
E9903	¾"	¾" HG	87	38	95	73	15	0.345
E9904	1"	1" HG	94	44	115	88		

EBCO Screwdown Pattern Swivel Ferrule B Compression Fitting Outlet

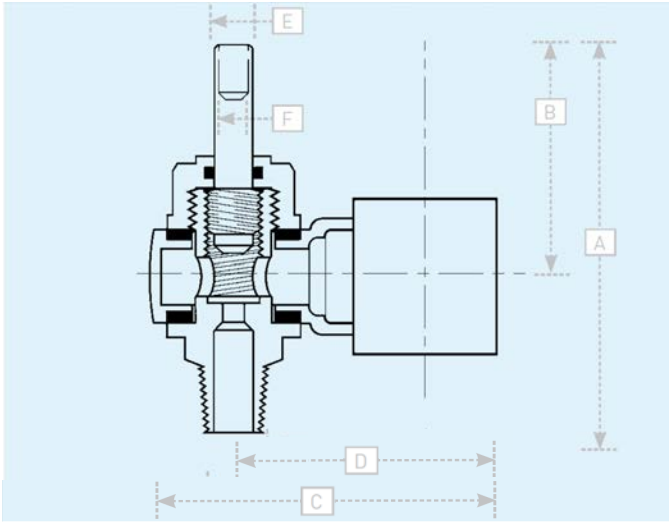

Gunmetal Banjo, EBCO-B outlet for metric MDPE pipe

Part Number	Inlet	Outlet	A (mm)	B (mm)	C (mm)	D (mm)	E (mm)	F (mm)	Box Quantity	Weight (Kg each)
SFS220B	½"	20mm EBCO-B	108	58	74	52	11	10		1.051
SFS325B	¾"	25mm EBCO-B	105	58	87	62	11	10	15	0.649
SFS432B	1"	32mm EBCO-B	116	65	95	67	16	13	10	1.049
SFS650B	1 ½"	50mm EBCO-B	151	93	143	102	22	19	4	
SFS863B	2"	63mm EBCO-B	168	100	159	112	25	19	2	

Gunmetal Banjo, EBCO-B outlet for imperial low density class C (BS1972) pipe

Part Number	Inlet	Outlet	A (mm)	B (mm)	C (mm)	D (mm)	E (mm)	F (mm)	Box Quantity	Weight (Kg each)
SFS202B	½"	½" EBCO-B	108	58	74	52	11	10		
SFS303B	¾"	¾" EBCO-B	105	58	87	62	11	10	15	0.653
SFS404B	1"	1" EBCO-B	116	65	95	67	16	13	10	1.057
SFS606B	1 ½"	1 ½" EBCO-B	151	93	143	102	22	19	4	
SFS808B	2"	2" EBCO-B	168	100	159	112	25	19		

EBCO Screwdown Pattern Swivel Ferrule S Compression Fitting Outlet

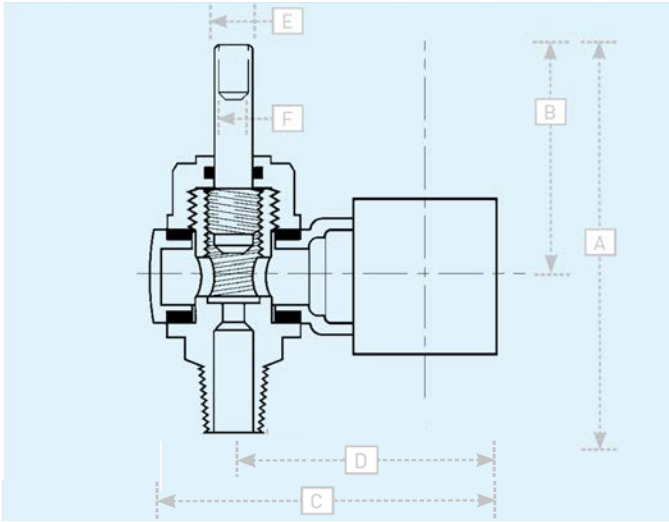

Gunmetal Banjo, EBCO-S Compression outlets for type B copper tube

Part Number	Inlet	Outlet	A (mm)	B (mm)	C (mm)	D (mm)	E (mm)	F (mm)	Box Quantity	Weight (Kg each)
SFS215S	½"	15mm Copper	108	58	77	54	11	10		
SFS322S	¾"	22 mm Copper	105	58	78	55	11	10		
SFS428S	1"	28 mm Copper	116	65	92	64	16	13		
SFS642S	1 ½"	42 mm Copper	151	93	127	86	22	19		
SFS854S	2"	54 mm Copper	168	100	142	95	25	19		

TALBOT Screwdown Pattern Swivel Ferrule Pushfit Outlet - Gunmetal Banjo

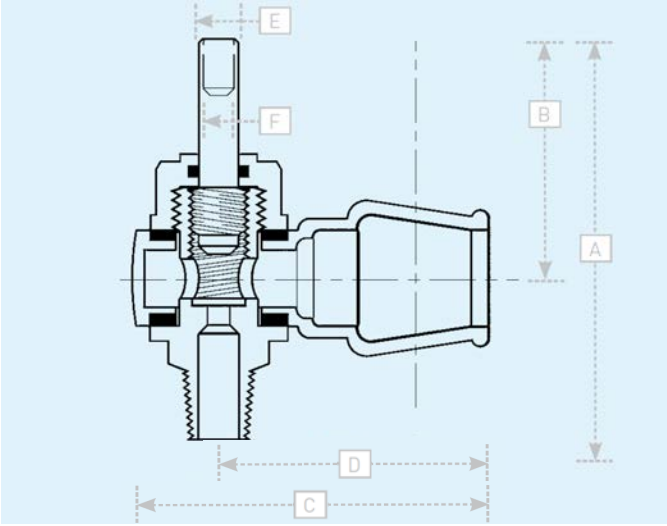

Gunmetal Banjo, Pushfit outlet for metric MDPE with liner

Part Number	Inlet	Outlet	A (mm)	B (mm)	C (mm)	D (mm)	E (mm)	F (mm)	Box Quantity	Weight (Kg each)
E2886	½"	20mm PF	124	72	76	54	11	13	15	
E2894	¾"	25mm PF	122	72	84	61	11	13		
E2896	1"	32mm PF	136	87	108	79	17	13		
E7013	1½"	50mm PF	160	93	171	131	22	19		
E7275	2"	63mm PF	170	100	198	152	25	19	15	

Gunmetal Banjo, Pushfit outlet for metric MDPE no liner

Part Number	Inlet	Outlet	A (mm)	B (mm)	C (mm)	D (mm)	E (mm)	F (mm)	Box Quantity	Weight (Kg each)
E4214	½"	20mm PF	124	72	76	54	11	13		
E2882	¾"	25mm PF	122	72	84	61	11	13		
E2883	1"	32mm PF	136	87	108	79	17	13		
E9477	1½"	50mm PF	160	93	171	131	22	19		
E4062	2"	63 mm PF	170	100	198	152	25	19	4	3.475

TALBOT Screwdown Pattern Swivel Ferrule Pushfit Outlet - Plastic Banjo

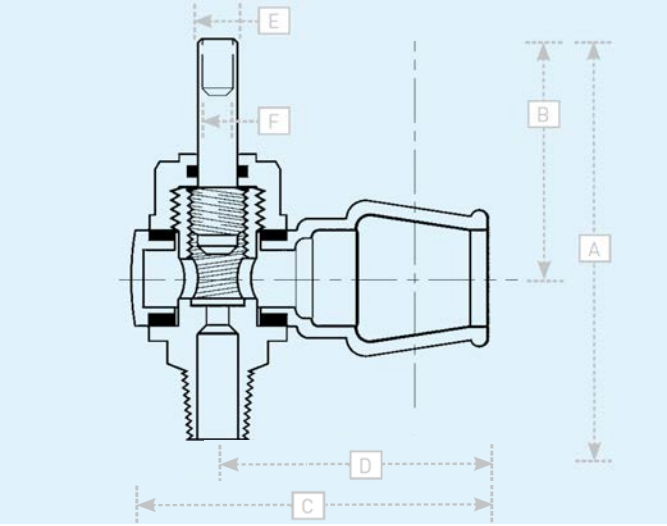

Plastic Banjo, Pushfit outlet for metric MDPE with liner

Part Number	Inlet	Outlet	A (mm)	B (mm)	C (mm)	D (mm)	E (mm)	F (mm)	Box Quantity	Weight (Kg each)
E6542	2"	63mm PF	170	100	201	152	25	19		

Plastic Banjo, Pushfit outlet for metric MDPE no liner

Part Number	Inlet	Outlet	A (mm)	B (mm)	C (mm)	D (mm)	E (mm)	F (mm)	Box Quantity	Weight (Kg each)
E6547	2"	63mm PF	170	100	201	152	25	19		

Plastic Banjo, Pushfit outlet for metric MDPE with liner with Crutch Head

Part Number	Inlet	Outlet	A (mm)	B (mm)	C (mm)	D (mm)	E (mm)	F (mm)	Box Quantity	Weight (Kg each)
E6545	2"	63mm PF	170	100	201	152	25	19		

EBCO Combined Saddle Ferrule
Asbestos Cement / Cast Iron Pipe

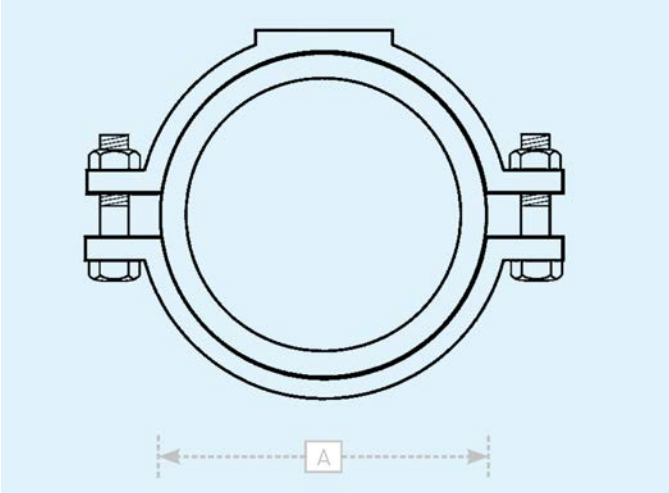

Gunmetal Banjo, EBCO-B Compression fitting outlet for metric MDPE pipe

Part Number	Nominal Pipe Bore	Strap Size (A)	Outlet	Box Quantity	Weight (Kg each)
SCA00220B	2" (50mm)	62 - 74mm	20mm EBCO-B		
SCA00225B	2" (50mm)	62 - 74mm	25mm EBCO-B		
SCA00320B	3" (80mm)	96 - 101mm	20mm EBCO-B		
SCA00325B	3" (80mm)	96 - 101mm	25mm EBCO-B		
SCA00332B	3" (80mm)	96 - 101mm	32mm EBCO-B		
SCA00420B	4" (100mm)	122 - 130mm	20mm EBCO-B		
SCA00425B	4" (100mm)	122 - 130mm	25mm EBCO-B		
SCA00432B	4" (100mm)	122 - 130mm	32mm EBCO-B		
SCA00520B	5" (125mm)	144 - 154mm	20mm EBCO-B		
SCA00525B	5" (125mm)	144 - 154mm	25mm EBCO-B		
SCA00532B	5" (125mm)	144 - 154mm	32mm EBCO-B		
SCA00620B	6" (150mm)	177 - 185mm	20mm EBCO-B		
SCA00625B	6" (150mm)	177 - 185mm	25mm EBCO-B		
SCA00632B	6" (150mm)	177 - 185mm	32mm EBCO-B		
SCA00820B	8" (200mm)	229 - 237mm	20mm EBCO-B		
SCA00825B	8" (200mm)	229 - 237mm	25mm EBCO-B		
SCA00832B	8" (200mm)	229 - 237mm	32mm EBCO-B		
SCA00920B	9" (225mm)	256 - 264mm	20mm EBCO-B		
SCA00925B	9" (225mm)	256 - 264mm	25mm EBCO-B		
SCA00932B	9" (225mm)	256 - 264mm	32mm EBCO-B		

Gunmetal Banjo, EBCO-C Compression fitting outlet for type B copper tube

Part Number	Nominal Pipe Bore	Strap Size (A)	Outlet	Box Quantity	Weight (Kg each)
SCA00215S	2" (50mm)	62 - 74mm	15mm Copper		
SCA00222S	2" (50mm)	62 - 74mm	22mm Copper		
SCA00315S	3" (80mm)	96 - 101mm	15mm Copper		
SCA00322S	3" (80mm)	96 - 101mm	22mm Copper		
SCA00328S	3" (80mm)	96 - 101mm	28mm Copper		
SCA00415S	4" (100mm)	122 - 130mm	15mm Copper		
SCA00422S	4" (100mm)	122 - 130mm	22mm Copper		
SCA00428S	4" (100mm)	122 - 130mm	28mm Copper		
SCA00515S	5" (125mm)	144 - 154mm	15mm Copper		
SCA00522S	5" (125mm)	144 - 154mm	22mm Copper		
SCA00528S	5" (125mm)	144 - 154mm	28mm Copper		
SCA00615S	6" (150mm)	177 - 185mm	15mm Copper		
SCA00622S	6" (150mm)	177 - 185mm	22mm Copper		
SCA00628S	6" (150mm)	177 - 185mm	28mm Copper		
SCA00815S	8" (200mm)	229 - 237mm	15mm Copper		
SCA00822S	8" (200mm)	229 - 237mm	22mm Copper		
SCA00828S	8" (200mm)	229 - 237mm	28mm Copper		
SCA00915S	9" (225mm)	256 - 264mm	15mm Copper		
SCA00922S	9" (225mm)	256 - 264mm	22mm Copper		
SCA00928S	9" (225mm)	256 - 264mm	28mm Copper		

Gunmetal Banjo, EBCO BSP female outlet

Part Number	Nominal Pipe Bore	Strap Size (A)	Outlet	Box Quantity	Weight (Kg each)
SCA00202F	2" (50mm)	62 - 74mm	½" Female		
SCA00203F	2" (50mm)	62 - 74mm	¾" Female		
SCA00302F	3" (80mm)	96 - 101mm	½" Female		
SCA00303F	3" (80mm)	96 - 101mm	¾" Female		
SCA00304F	3" (80mm)	96 - 101mm	1" Female		
SCA00402F	4" (100mm)	122 - 130mm	½" Female		
SCA00403F	4" (100mm)	122 - 130mm	¾" Female		
SCA00404F	4" (100mm)	122 - 130mm	1" Female		
SCA00502F	5" (125mm)	144 - 154mm	½" Female		
SCA00503F	5" (125mm)	144 - 154mm	¾" Female		
SCA00504F	5" (125mm)	144 - 154mm	1" Female		
SCA00602F	6" (150mm)	177 - 185mm	½" Female		
SCA00603F	6" (150mm)	177 - 185mm	¾" Female		
SCA00604F	6" (150mm)	177 - 185mm	1" Female		
SCA00802F	8" (200mm)	229 - 237mm	½" Female		
SCA00803F	8" (200mm)	229 - 237mm	¾" Female		
SCA00804F	8" (200mm)	229 - 237mm	1" Female		
SCA00902F	9" (225mm)	256 - 264mm	½" Female		
SCA00903F	9" (225mm)	256 - 264mm	¾" Female		
SCA00904F	9" (225mm)	256 - 264mm	1" Female		

Plastic Banjo, EBCO Pushfit outlet for metric MDPE pipe

Part Number	Nominal Pipe Bore	Strap Size (A)	Outlet	Box Quantity	Weight (Kg each)
SCA01525Z/P	1 ½" (40mm)	55 - 61mm	25mm BPF		
SCA00225Z/P	2" (50mm)	62 - 74mm	25mm BPF	5	1.390
SCA00325Z/P	3" (80mm)	96 - 101mm	25mm BPF		
SCA00425Z/P	4" (100mm)	122 - 130mm	25mm BPF		
SCA00432Z/P	4" (100mm)	122 - 130mm	32mm BPF		
SCA00625Z/P	6" (150mm)	177 - 185mm	25mm BPF		
SCA00725Z/P	7" (100mm)	200 - 210mm	25mm BPF	4	
SCA00825Z/P	8" (200mm)	229 - 237mm	25mm BPF	3	
SCA00925Z/P	9" (225mm)	256 - 264mm	25mm BPF	2	2.807
SCA01025Z/P	10" (250mm)	286 - 294mm	25mm BPF	5	
SCA01225Z/P	12" (300mm)	344 - 352mm	25mm BPF	5	3.744
SCA01232Z/P	12" (300mm)	344 - 352mm	32mm BPF		

Gunmetal Banjo, EBCO Pushfit outlet for metric MDPE pipe

Part Number	Nominal Pipe Bore	Strap Size (A)	Outlet	Box Quantity	Weight (Kg each)
SCA00220Z	2" (50mm)	62 - 74mm	20mm BPF		
SCA00225Z	2" (50mm)	62 - 74mm	25mm BPF		
SCA00320Z	3" (80mm)	96 - 101mm	20mm BPF		
SCA00325Z	3" (80mm)	96 - 101mm	25mm BPF		
SCA00332Z	3" (80mm)	96 - 101mm	32mm BPF		
SCA00420Z	4" (100mm)	122 - 130mm	20mm BPF		
SCA00425Z	4" (100mm)	122 - 130mm	25mm BPF		
SCA00432Z	4" (100mm)	122 - 130mm	32mm BPF		
SCA00520Z	5" (125mm)	144 - 154mm	20mm BPF		
SCA00525Z	5" (125mm)	144 - 154mm	25mm BPF	5	1.938
SCA00532Z	5" (125mm)	144 - 154mm	32mm BPF		
SCA00620Z	6" (150mm)	177 - 185mm	20mm BPF		
SCA00625Z	6" (150mm)	177 - 185mm	25mm BPF		
SCA00632Z	6" (150mm)	177 - 185mm	32mm BPF		
SCA00820Z	8" (200mm)	229 - 237mm	20mm BPF		
SCA00825Z	8" (200mm)	229 - 237mm	25mm BPF		2.327
SCA00832Z	8" (200mm)	229 - 237mm	32mm BPF		
SCA00920Z	9" (225mm)	256 - 264mm	20mm BPF		
SCA00925Z	9" (225mm)	256 - 264mm	25mm BPF		
SCA00932Z	9" (225mm)	256 - 264mm	32mm BPF		
SCA01025Z	10" (250mm)	286 - 294mm	25mm BPF		3.013
SCA01032Z	10" (250mm)	286 - 294mm	32mm BPF		
SCA01225Z	12" (300mm)	344 - 352mm	25mm BPF		
SCA01232Z	12" (300mm)	344 - 352mm	32mm BPF		3.590

TALBOT Combined Saddle Ferrule Asbestos Cement / Cast Iron Pipe

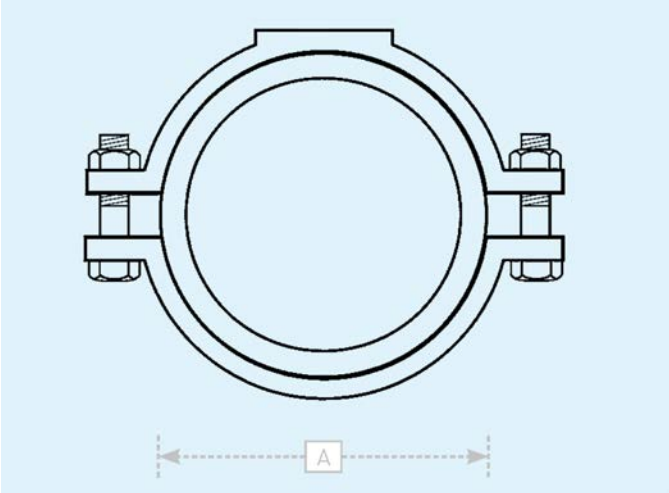

Imperial Pipe Sizes
Gunmetal Banjo, Talbot Pushfit outlet for metric MDPE with liner

Part Number	Nominal Pipe Bore	Strap Size (A)	Outlet	Box Quantity	Weight (Kg each)
E3824	2" (50mm)	62 - 74mm	20mm PF		
E3003	2" (50mm)	62 - 74mm	25mm PF		
E2907	3" (80mm)	96 - 101mm	20mm PF		
E2911	3" (80mm)	96 - 101mm	25mm PF		
E2908	4" (100mm)	122 - 130mm	20mm PF		
E2913	4" (100mm)	122 - 130mm	25mm PF		
E2928	4" (100mm)	122 - 130mm	32mm PF		
E2909	6" (150mm)	177 - 185mm	20mm PF		
E2915	6" (150mm)	177 - 185mm	25mm PF		
E3624	6" (150mm)	177 - 185mm	32mm PF		
E11260	6" (150mm)	177 - 185mm	50mm PF	2	
E11295	8" (200mm)	229 - 237mm	20mm PF		
E11294	8" (200mm)	229 - 237mm	32mm PF		
E2917*	8" (200mm)	236 - 246mm	25mm PF		
E2929*	8" (200mm)	236 - 246mm	32mm PF		
E2918*	9" (225mm)	268 - 276mm	25mm PF		
E4237*	9" (225mm)	268 - 276mm	32mm PF	2	
E4132*	9" (225mm)	268 - 276mm	63mm PF		
E9107*	10" (250mm)	294 - 302mm	25mm PF		
E9106*	10" (250mm)	294 - 302mm	32mm PF		
E4859	12" (300mm)	344 - 352mm	20mm PF		
E3004	12" (300mm)	344 - 352mm	25mm PF		

Plastic Banjo, Talbot Pushfit outlet for metric MDPE with liner

Part Number	Nominal Pipe Bore	Strap Size (A)	Outlet	Box Quantity	Weight (Kg each)
E3867	2" (50mm)	62 - 74mm	20mm PF		
E3945	2" (50mm)	62 - 74mm	25mm PF		
E10469	2" (50mm)	62 - 74mm	32mm PF		
E3847	3" (80mm)	96 - 101mm	20mm PF		
E3918	3" (80mm)	96 - 101mm	25mm PF		
E3913	4" (100mm)	122 - 130mm	25mm PF	8	
E3877	4" (100mm)	122 - 130mm	32mm PF		
E3856	6" (150mm)	177 - 185mm	20mm PF		
E3916	6" (150mm)	177 - 185mm	25mm PF		
E3897	6" (150mm)	177 - 185mm	32mm PF		
E3920*	8" (200mm)	238 - 246mm	25mm PF		
E3878*	8" (200mm)	238 - 246mm	32mm PF		
E3938*	9" (225mm)	268 - 276mm	25mm PF		
E3944	12" (300mm)	344 - 352mm	25mm PF		

TALBOT Combined Saddle Ferrule Asbestos Cement / Cast Iron Pipe

Gunmetal Banjo, Talbot Pushfit outlet for imperial PE no liner

Part Number	Nominal Pipe Bore	Strap Size (A)	Outlet	Box Quantity	Weight (Kg each)
E4731	2" (50mm)	62 - 74mm	¾" PF		
E5772	4" (100mm)	122 - 130mm	½" PF		
E6062	4" (100mm)	122 - 130mm	¾" PF		
E3456	4" (100mm)	122 - 130mm	1" PF		
E7186	4" (100mm)	122 - 130mm	2" PF		
E7564	6" (150mm)	177 - 185mm	½" PF		
E7565	6" (150mm)	177 - 185mm	1" PF		
E6957	6" (150mm)	177 - 185mm	1 ½" PF		
E6066	6" (150mm)	177 - 185mm	2" PF		
E6063*	8" (200mm)	238 - 246mm	2" PF		
E8503*	9" (225mm)	268 - 276mm	¾" PF		
E8502*	9" (225mm)	268 - 276mm	1" PF		
E8762	12" (300mm)	344 - 352mm	2" PF		

Plastic Banjo, Talbot Pushfit outlet for imperial PE no liner

Part Number	Nominal Pipe Bore	Strap Size (A)	Outlet	Box Quantity	Weight (Kg each)
E5837	4" (100mm)	122 - 130mm	½" PF		
E3892	4" (100mm)	122 - 130mm	1" PF		
E6064*	8" (200mm)	238 - 246mm	½" PF		
E6065*	8" (200mm)	238 - 246mm	1" PF		
E7843	12" (300mm)	344 - 352mm	1 ½" PF		

**Metric Asbestos Cement Pipe Class 25*

EBCO Combined Saddle Ferrule
Ductile Iron Pipe

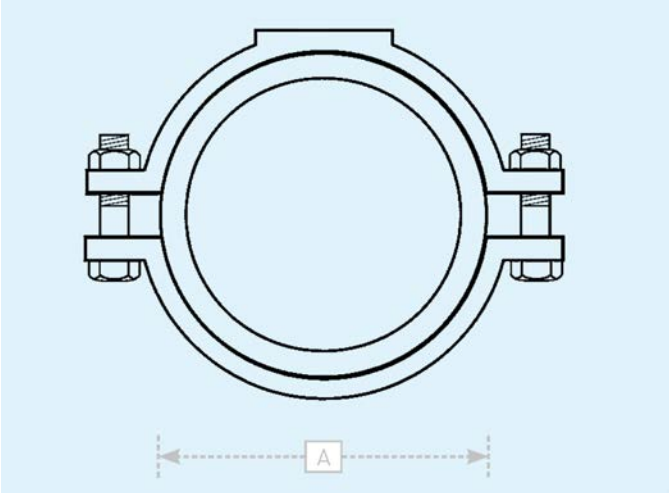

Gunmetal Banjo, EBCO Pushfit outlet for metric MDPE pipe

Part Number	Nominal Pipe Bore	Strap Size (A)	Outlet	Box Quantity	Weight (Kg each)
SCA00320Z	3" (80mm)	96 - 101mm	20mm PF		
SCA00325Z	3" (80mm)	96 - 101mm	25mm PF		
SCA00332Z	3" (80mm)	96 - 101mm	32mm PF		
SCA00425Z	4" (100mm)	110 - 118mm	25mm PF		
SCA00625Z	6" (150mm)	165 - 175mm	25mm PF		
SCA00825Z	8" (200mm)	217 - 225mm	25mm PF		
SCA00920Z	10" (250mm)	268 - 276mm	20mm PF		
SCA00925Z	10" (250mm)	268 - 276mm	25mm PF		
SCA00932Z	10" (250mm)	268 - 276mm	32mm PF	2	

Plastic Banjo, EBCO Pushfit outlet for metric MDPE pipe

Part Number	Nominal Pipe Bore	Strap Size (A)	Outlet	Box Quantity	Weight (Kg each)
SCA00325Z/P	3" (80mm)	96 - 101mm	25mm BPF		
SCA00925Z/P	10" (250mm)	268 - 276mm	25mm BPF	2	2.81

Gunmetal Banjo, EBCO-B Compression fitting outlet for metric MDPE pipe

Part Number	Nominal Pipe Bore	Strap Size (A)	Outlet	Box Quantity	Weight (Kg each)
SCA00320B	3" (80mm)	96 - 101mm	20mm EBCO-B		
SCA00325B	3" (80mm)	96 - 101mm	25mm EBCO-B		
SCA00332B	3" (80mm)	96 - 101mm	32mm EBCO-B		
SCA00920B	10" (250mm)	268 - 276mm	20mm EBCO-B		
SCA00925B	10" (250mm)	268 - 276mm	25mm EBCO-B		
SCA00932B	10" (250mm)	268 - 276mm	32mm EBCO-B		

Gunmetal Banjo, EBCO-S Compression fitting outlet for type B copper tube

Part Number	Nominal Pipe Bore	Strap Size (A)	Outlet	Box Quantity	Weight (Kg each)
SCA00315S	3" (80mm)	96 - 101mm	15mm Copper		
SCA00322S	3" (80mm)	96 - 101mm	22mm Copper		
SCA00328S	3" (80mm)	96 - 101mm	28mm Copper		
SCA00915S	10" (250mm)	268 - 276mm	15mm Copper		
SCA00922S	10" (250mm)	268 - 276mm	22mm Copper		
SCA00928S	10" (250mm)	268 - 276mm	28mm Copper		

TALBOT Combined Saddle Ferrule Ductile Iron Pipe

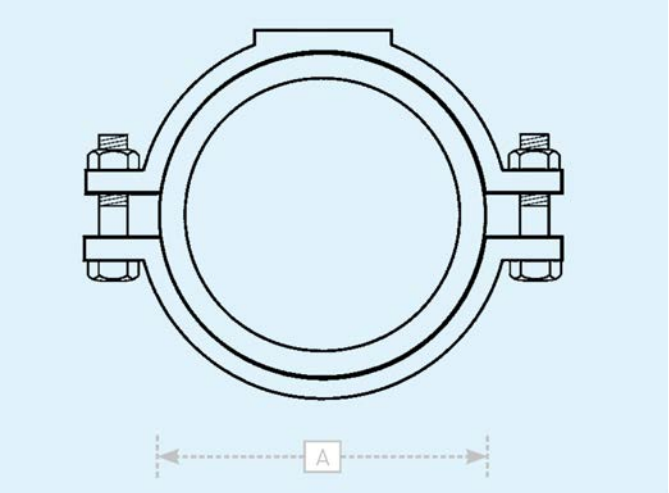

Gunmetal Banjo, Talbot Pushfit Outlet for metric MDPE with liner

Part Number	Nominal Pipe Bore	Strap Size (A)	Outlet	Box Quantity	Weight (Kg each)
E2907	3" (80mm)	96 - 101mm	20mm PF		
E2911	3" (80mm)	96 - 101mm	25mm PF		
E5757	4" (100mm)	110 - 118mm	20mm PF		
E2912	4" (100mm)	110 - 118mm	25mm PF		
E5809	4" (100mm)	110 - 118mm	63mm PF		
E2914	6" (150mm)	165 - 173mm	25mm PF		
E5302	6" (150mm)	165 - 173mm	50mm PF		
E4696	6" (150mm)	165 - 173mm	63mm PF		
E2916	8" (200mm)	217 - 225mm	25mm PF		
E4338	8" (200mm)	217 - 225mm	32mm PF	6	
E9979	8" (200mm)	217 - 225mm	63mm PF	2	
E2918	10" (250mm)	268 - 276mm	25mm PF		
E4237	10" (250mm)	268 - 276mm	32mm PF	2	
E4132	10" (250mm)	268 - 276mm	63mm PF		
E4107	12" (300mm)	322 - 330mm	25mm PF	5	
E9899	12" (300mm)	322 - 330mm	32mm PF	5	
E9980	12" (300mm)	322 - 330mm	63mm PF		

Plastic Banjo, Talbot Pushfit Outlet for metric MDPE with liner

Part Number	Nominal Pipe Bore	Strap Size (A)	Outlet	Box Quantity	Weight (Kg each)
E3847	3" (80mm)	96 - 101mm	20mm PF		
E3918	3" (80mm)	96 - 101mm	25mm PF		
E3914	4" (100mm)	110 - 118mm	25mm PF		
E6550	4" (100mm)	110 - 118mm	63mm PF		
E3917	6" (150mm)	165 - 173mm	25mm PF		
E6553	6" (150mm)	165 - 173mm	63mm PF		
E3915	8" (200mm)	217 - 225mm	25mm PF		
E3938	10" (250mm))	268 - 276mm	25mm PF		
E8369	12" (300mm)	322 - 330mm	32mm PF		

Gunmetal Banjo, Talbot Pushfit outlet for imperial PE no liner

Part Number	Nominal Pipe Bore	Strap Size (A)	Outlet	Box Quantity	Weight (Kg each)
E2903	4" (100mm)	110 - 118mm	¾" PF		
E3906	8" (100mm)	217 - 225mm	¾" PF		
E8503	10" (250mm)	268 - 276mm	¾" PF		
E8502	10" (250mm)	268 - 276mm	1" PF		
E8504	12" (300mm)	322 - 330mm	¾" PF		
E8505	12" (300mm)	322 - 330mm	1" PF		

TALBOT Combined Saddle Ferrule Ductile Iron Pipe

Plastic Banjo, Talbot Pushfit outlet for imperial PE no liner

Part Number	Nominal Pipe Bore	Strap Size (A)	Outlet	Box Quantity	Weight (Kg each)
E3965	4" (100mm)	110 - 118mm	¾" PF		
E11214	4" (100mm)	110 - 118mm	1 ½" PF		
E5839	6" (150mm)	165 - 173mm	2" PF		
E5836	8" (200mm)	217 - 225mm	½" PF		
E5840	8" (200mm)	217 - 225mm	1" PF		
E5838	8" (200mm)	217 - 225mm	2" PF		

EBCO Combined Saddle Ferrule PE / PVC Pipe

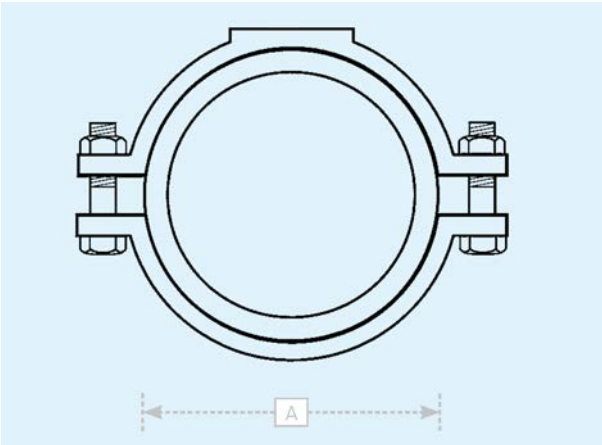

Imperial Pipe Sizes

Gunmetal Banjo, EBCO BSP female outlet

Part Number	Nominal Pipe Bore	Strap Size (A)	Outlet	Box Quantity	Weight (Kg each)
SCP00408F	4" (100mm)	110 - 118mm	2" Female		
SCP00608F	6" (150mm)	165 - 173mm	2" Female	2	
SCP00808F	8" (200mm)	217 - 225mm	2" Female		

Gunmetal Banjo, EBCO Pushfit outlet for metric MDPE pipe

Part Number	Nominal Pipe Bore	Strap Size (A)	Outlet	Box Quantity	Weight (Kg each)
SCP00425Z	4" (100mm)	110 - 118mm	25mm BPF		
SCP00625Z	6" (150mm)	165 - 173mm	25mm BPF		
SCP00825Z	8" (200mm)	217 - 225mm	25mm BPF		
SCP00925Z	9" (225mm)	238 - 246mm	25mm BPF		

Plastic Banjo, EBCO Pushfit outlet for metric MDPE pipe

Part Number	Nominal Pipe Bore	Strap Size (A)	Outlet	Box Quantity	Weight (Kg each)
SCP00925Z/P	9" (225mm)	238 - 246mm	25mm BPF	5	
SCP00932Z/P	9" (225mm)	238 - 246mm	32mm BPF	2	

Metric Pipe Sizes

Gunmetal Banjo, EBCO Pushfit outlet for metric MDPE pipe

Part Number	Nominal Pipe Outside Diameter	Strap Size (A)	Outlet	Box Quantity	Weight (Kg each)
SCP09025Z	90mm	88 - 92mm	25mm BPF		

Plastic Banjo, EBCO Pushfit outlet for metric MDPE pipe

Part Number	Nominal Pipe Outside Diameter	Strap Size (A)	Outlet	Box Quantity	Weight (Kg each)
SCP40025Z/P	400mm	396 - 404mm	25mm BPF		
SCP40032Z/P	400mm	396 - 404mm	32mm BPF		
SCP45025Z/P	450mm		25mm BPF		
SCP56032Z/P	560mm		32mm BPF		

Gunmetal Banjo, EBCO-B Compression Fitting Outlet

Part Number	Nominal Pipe Outside Diameter	Strap Size (A)	Outlet	Box Quantity	Weight (Kg each)
SCP06320B*	63mm	58 - 62mm	20mm EBCO-B		

Gunmetal Banjo, EBCO-S Compression Fitting Outlet (Type B Copper Tube)

Part Number	Nominal Pipe Outside Diameter	Strap Size (A)	Outlet	Box Quantity	Weight (Kg each)
SCP11022S	110mm	110 - 118mm	22mm Copper		

** Not suitable for metric PVC pipe*

TALBOT Combined Saddle Ferrule PE / PVC Pipe

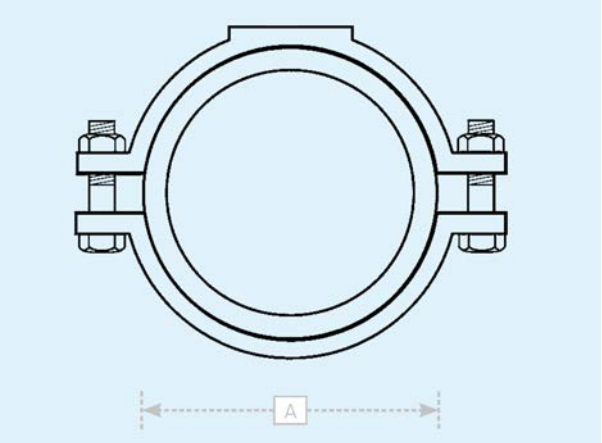

Imperial Pipe Sizes

Gunmetal Banjo, Talbot Pushfit outlet for metric MDPE pipe with liner

Part Number	Nominal Pipe Bore	Strap Size (A)	Tapping Size	Box Quantity	Weight (Kg each)
E3009	2" (50mm)	60 - 64mm	20mm PF		
E3010	2" (50mm)	60 - 64mm	25mm PF		
E2910	3" (80mm)	88 - 92mm	25mm PF		
E6656	3" (80mm)	88 - 92mm	63mm PF		
E5757	4" (100mm)	110 - 118mm	20mm PF		
E2912	4" (100mm)	110 - 118mm	25mm PF		
E5809	4" (100mm)	110 - 118mm	63mm PF		
E2914	6" (150mm)	165 - 173mm	25mm PF		
E5302	6" (150mm)	165 - 173mm	50mm PF		
E4696	6" (150mm)	165 - 173mm	63mm PF		
E2916	8" (200mm)	217 - 225mm	25mm PF		
E4338	8" (200mm)	217 - 225mm	32mm PF		
E9979	8" (200mm)	217 - 225mm	63mm PF		
E2917	9" (225mm)	238 - 246mm	25mm PF		
E2929	9" (225mm)	238 - 246mm	32mm PF		
E2918	10" (250mm)	268 - 276mm	25mm PF		
E4237	10" (250mm)	268 - 276mm	32mm PF		
E4132	10" (250mm)	268 - 276mm	63mm PF		
E4107	12" (300mm)	322 - 330mm	25mm PF		
E9899	12" (300mm)	322 - 330mm	32mm PF		
E9980	12" (300mm)	322 - 330mm	63mm PF		

Plastic Banjo, Talbot Pushfit outlet for metric MDPE with liner

Part Number	Nominal Pipe Bore	Strap Size (A)	Outlet	Box Quantity	Weight (Kg each)
E3848	2" (50mm)	60 - 64mm	20mm PF		
E3922	2" (50mm)	60 - 64mm	25mm PF		
E3919	3" (80mm)	88 - 92mm	25mm PF		
E3914	4" (100mm)	110 - 118mm	25mm PF		
E6550	4" (100mm)	110 - 118mm	63mm PF		
E3917	6" (150mm)	165 - 173mm	25mm PF		
E6553	6" (150mm)	165 - 173mm	63mm PF		
E3915	8" (200mm)	217 - 225mm	25mm PF		
E3920	9" (225mm)	238 - 246mm	25mm PF		
E3878	9" (225mm)	238 - 246mm	32mm PF		
E3938	10" (250mm)	268 - 276mm	25mm PF		
E8369	12" (300mm)	322 - 330mm	32mm PF		

TALBOT Combined Saddle Ferrule PE / PVC Pipe

Gunmetal Banjo, Talbot Pushfit outlet for imperial PE no liner

Part Number	Nominal Pipe Bore	Strap Size (A)	Outlet	Box Quantity	Weight (Kg each)
E4742	2" (50mm)	60 - 64mm	¾" PF		
E2903	4" (100mm)	110 - 118mm	¾" PF		
E3906	8" (200mm)	217 - 225mm	¾" PF		
E6063	9" (225mm)	238 - 246mm	2" PF		
E8503	10" (250mm)	268 - 276mm	¾" PF		
E8502	10" (250mm)	268 - 276mm	1" PF		
E8504	12" (300mm)	322 - 330mm	¾" PF		
E8505	12" (300mm)	322 - 330mm	1" PF		

Metric Pipe Sizes

Gunmetal Banjo, Talbot Pushfit outlet for metric MDPE with liner

Part Number	Nominal Pipe	Strap Size (A)	Outlet	Box Quantity	Weight (Kg each)
E2906	63mm	60 - 64mm	20mm PF		
E5134	160mm	155 - 163mm	25mm PF		

Plastic Banjo, Talbot Pushfit outlet for metric MDPE with liner

Part Number	Nominal Pipe	Strap Size (A)	Outlet	Box Quantity	Weight (Kg each)
E3854	63mm	60 - 64mm	20mm PF		
E7378	315mm	308 - 316mm	25mm PF		
E7379	315mm	308 - 316mm	32mm PF		

EBCO Self Tapping Ferrule Straps
Asbestos Cement Pipe

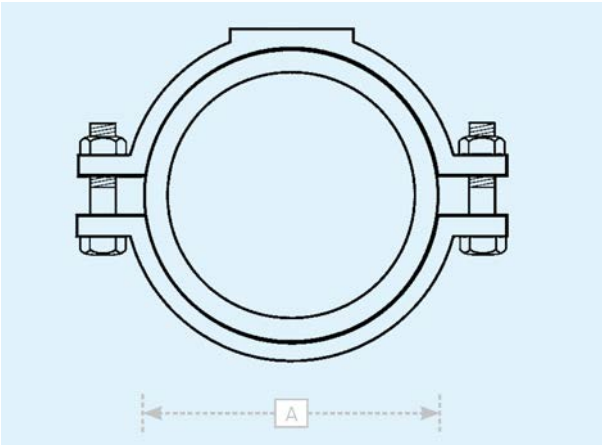

Imperial Pipe Sizes

Gunmetal Banjo, EBCO BSP female threaded outlet

Part Number	Nominal Pipe Bore	Strap Size (A)	Outlet	Box Quantity	Weight (Kg each)
STA00202F	2" (50mm)	62 - 74mm	½" Female		
STA00203F	2" (50mm)	62 - 74mm	¾" Female		
STA00302F	3" (80mm)	96 - 101mm	½" Female		
STA00303F	3" (80mm)	96 - 101mm	¾" Female		
STA00402F	4" (100mm)	122 - 130mm	½" Female		
STA00403F	4" (100mm)	122 - 130mm	¾" Female		
STA00602F	6" (150mm)	177 - 185mm	½" Female		
STA00603F	6" (150mm)	177 - 185mm	¾" Female		1.66
STA00802F	8" (200mm)	229 - 237mm	½" Female		
STA00803F	8" (200mm)	229 - 237mm	¾" Female		

Gunmetal Banjo, EBCO Pushfit outlet for metric MDPE pipe

Part Number	Nominal Pipe Bore	Strap Size (A)	Outlet	Box Quantity	Weight (Kg each)
STA00225Z	2" (50mm)	62 - 74mm	25mm BPF	10	
STA00320Z	3" (80mm)	96 - 101mm	20mm BPF		
STA00325Z	3" (80mm)	96 - 101mm	25mm BPF	12	1.096
STA00420Z	4" (100mm)	122 - 130mm	20mm BPF		
STA00425Z	4" (100mm)	122 - 130mm	25mm BPF	8	1.336
STA00525Z	5" (125mm)	144 - 154mm	25mm BPF		
STA00620Z	6" (150mm)	177 - 185mm	20mm BPF		
STA00625Z	6" (150mm)	177 - 185mm	25mm BPF	5	1.660
STA00725Z	7" (175mm)	200 - 210mm	25mm BPF		
STA00825Z	8" (200mm)	229 - 237mm	25mm BPF	3	2.668
STA00925Z	9" (225mm)	258 - 264mm	25mm BPF		3.053

Plastic Banjo, EBCO Pushfit outlet for metric MDPE pipe

Part Number	Nominal Pipe Bore	Strap Size (A)	Outlet	Box Quantity	Weight (Kg each)
STA00225Z/P	2" (50mm)	62 - 74mm	25mm BPF		1.450
STA00325Z/P	3" (80mm)	96 - 101mm	25mm BPF	12	1.029
STA00425Z/P	4" (100mm)	122 - 130mm	25mm BPF	8	1.088
STA00625Z/P	6" (150mm)	177 - 185mm	25mm BPF	5	1.400
STA00825Z/P	8" (200mm)	229 - 237mm	25mm BPF		1.324

EBCO Self Tapping Ferrule Straps
Asbestos Cement Pipe

Gunmetal Banjo, EBCO-B Compression fitting outlet

Part Number	Nominal Pipe Bore	Strap Size (A)	Outlet	Box Quantity	Weight (Kg each)
STA00320B	3" (80mm)	96 - 101mm	20mm EBCO-B		
STA00325B	3" (80mm)	96 - 101mm	25mm EBCO-B		
STA00420B	4" (100mm)	122 - 130mm	20mm EBCO-B		
STA00425B	4" (100mm)	122 - 130mm	25mm EBCO-B		
STA00620B	6" (150mm)	177 - 185mm	20mm EBCO-B		
STA00625B	6" (150mm)	177 - 185mm	25mm EBCO-B		

Gunmetal Banjo, EBCO-S Compression fitting outlet for type B copper tube

Part Number	Nominal Pipe Bore	Strap Size (A)	Outlet	Box Quantity	Weight (Kg each)
STA00315S	3" (80mm)	96 - 101mm	15mm Copper		1.450
STA00322S	3" (80mm)	96 - 101mm	22mm Copper		1.029
STA00415S	4" (100mm)	122 - 130mm	15mm Copper		1.088
STA00422S	4" (100mm)	122 - 130mm	22mm Copper		1.400
STA00615S	6" (150mm)	177 - 185mm	15mm Copper		1.324

TALBOT Self Tapping Ferrule Straps
Asbestos Cement Pipe

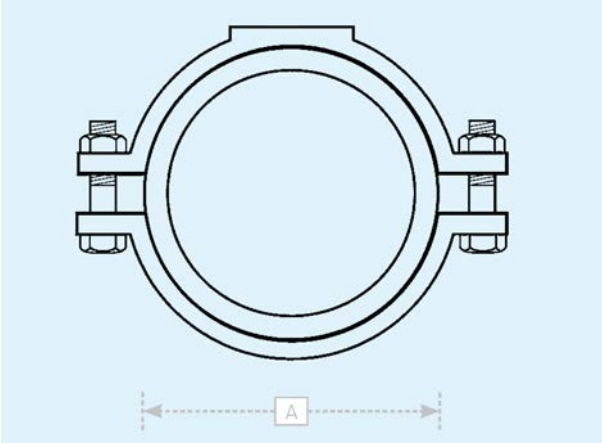

Gunmetal Banjo, Talbot Pushfit outlet for metric MDPE no liner

Part Number	Nominal Pipe Bore	Strap Size (A)	Outlet	Box Quantity	Weight (Kg each)
E11268	4" (100mm)	122 -130mm	20mm PF		
E11364	4" (100mm)	122 -130mm	25mm PF		

Plastic Banjo, Talbot Pushfit outlet for metric MDPE with liner

Part Number	Nominal Pipe Bore	Strap Size (A)	Outlet	Box Quantity	Weight (Kg each)
E8358	3" (80mm)	96 - 101mm	20mm PF		
E8359	3" (80mm)	96 - 101mm	25mm PF	12	
E8360	3" (80mm)	96 - 101mm	32mm PF	10	
E8361	4" (100mm)	122 - 130mm	20mm PF		
E8362	4" (100mm)	122 - 130mm	25mm PF	8	
E8363	4" (100mm)	122 - 130mm	32mm PF	7	
E8364	6" (150mm)	177 - 185mm	20mm PF		
E8365	6" (150mm)	177 - 185mm	25mm PF	5	
E8366	6" (150mm)	177 - 185mm	32mm PF	5	

Plastic Banjo, Talbot Pushfit outlet for imperial PE no liner

Part Number	Nominal Pipe Bore	Strap Size (A)	Outlet	Box Quantity	Weight (Kg each)
E8744	3" (80mm)	96 - 101mm	¾" PF		
E8742	4" (100mm)	122 - 130mm	¾" PF		
E8743	6" (150mm)	177 - 185mm	¾" PF		

EBCO Self Tapping Ferrule Straps PE / PVC Pipe

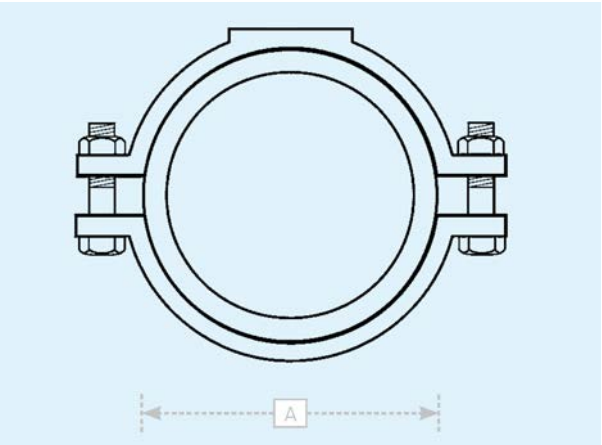

Imperial Pipe Sizes

Gunmetal Banjo, EBCO BSP female outlet

Part Number	Nominal Pipe Bore	Strap Size (A)	Outlet	Box Quantity	Weight (Kg each)
STP00602F	6" (150mm)	165 - 173mm	½" Female		
STP00603F	6" (150mm)	165 - 173mm	¾" Female		1.484
STP00604F	6" (150mm)	165 - 173mm	1" Female	6	1.896
STP00802F	8" (200mm)	217 - 225mm	½" Female		2.175
STP00803F	8" (200mm)	217 - 225mm	¾" Female	5	
STP00804F	8" (200mm)	217 - 225mm	1" Female		
STP01004F	10" (250mm)	268 - 276mm	1" Female		

Gunmetal Banjo, EBCO Pushfit outlet for metric MDPE pipe

Part Number	Nominal Pipe Bore	Strap Size (A)	Outlet	Box Quantity	Weight (Kg each)
STP00620Z	6" (150mm)	165 - 173mm	20mm BPF		
STP00625Z	6" (150mm)	165 - 173mm	25mm BPF		1.553
STP00632Z	6" (150mm)	165 - 173mm	32mm BPF		
STP00820Z	8" (200mm)	217 - 225mm	20mm BPF		
STP00825Z	8" (200mm)	217 - 225mm	25mm BPF		
STP00832Z	8" (200mm)	217 - 225mm	32mm BPF		
STP01020Z	10" (250mm)	268 - 276mm	20mm BPF		
STP01025Z	10" (250mm)	268 - 276mm	25mm BPF		
STP01232Z	12" (300mm)	322 - 330mm	32mm BPF		

Plastic Banjo, EBCO Pushfit outlet for metric MDPE pipe

Part Number	Nominal Pipe Bore	Strap Size (A)	Outlet	Box Quantity	Weight (Kg each)
STP00620Z/P	6" (150mm)	165 - 173mm	20mm BPF		
STP00625Z/P	6" (150mm)	165 - 173mm	25mm BPF		1.304
STP00632Z/P	6" (150mm)	165 - 173mm	32mm BPF		
STP00820Z/P	8" (200mm)	217 - 225mm	20mm BPF		
STP00825Z/P	8" (200mm)	217 - 225mm	25mm BPF		1.631
STP00832Z/P	8" (200mm)	217 - 225mm	32mm BPF		1.980
STP01020Z/P	10" (250mm)	268 - 276mm	20mm BPF		
STP01025Z/P	10" (250mm)	268 - 276mm	25mm BPF	3	3.217
STP01032Z/P	10" (250mm)	268 - 276mm	32mm BPF		2.829
STP01232Z/P	12" (300mm)	322 - 330mm	32mm BPF		

EBCO Self Tapping Ferrule Straps PE / PVC Pipe

Gunmetal Banjo, EBCO-B Compression fitting outlet for metric MDPE pipe

Part Number	Nominal Pipe Bore	Strap Size (A)	Outlet	Box Quantity	Weight (Kg each)
STP00625B	6" (150mm)	165 - 173mm	25mm EBCO-B		
STP00632B	6" (150mm)	165 - 173mm	32mm EBCO-B		
STP00825B	8" (200mm)	217 - 225mm	25mm EBCO-B		
STP00832B	8" (200mm)	217 - 225mm	32mm EBCO-B		

Gunmetal Banjo, EBCO-S Compression fitting outlet for type B copper tube

Part Number	Nominal Pipe Bore	Strap Size (A)	Outlet	Box Quantity	Weight (Kg each)
STP00428S	4" (100mm)	110 - 118mm	28mm Copper		
STP00615S	6" (150mm)	165 - 173mm	15mm Copper		
STP00622S	6" (150mm)	165 - 173mm	22mm Copper		
STP00628S	6" (150mm)	165 - 173mm	28mm Copper		
STP00815S	8" (200mm)	217 - 225mm	15mm Copper		
STP00822S	8" (200mm)	217 - 225mm	22mm Copper		
STP00828S	8" (200mm)	217 - 225mm	28mm Copper		

Metric Pipe Sizes

Gunmetal Banjo, EBCO BSP female outlet

Part Number	Nominal Pipe	Strap Size (A)	Outlet	Box Quantity	Weight (Kg each)
STP03202F	32mm	29 - 34mm	½" Female		
STP03203F	32mm	29 - 34mm	¾" Female		
STP05002F	50mm	46 - 50.5mm	½" Female		
STP05003F	50mm	46 - 50.5mm	¾" Female		
STP06302F	63mm	60 - 64mm	½" Female		
STP06303F	63mm	60 - 64mm	¾" Female		1.040
STP09002F	90mm	88 - 92mm	½" Female		
STP09003F	90mm	88 - 92mm	¾" Female	8	
STP09004F	90mm	88 - 92mm	1" Female		1.469
STP11002F	110mm	110 - 118mm	½" Female		
STP11003F	110mm	110 - 118mm	¾" Female	8	1.382
STP11004F	110mm	110 - 118mm	1" Female	8	
STM12503F	125mm	122 - 130mm	¾" Female		
STM12504F	125mm	122 - 130mm	1" Female		
STP16002F	160mm	155 - 164mm	½" Female		
STP16003F	160mm	155 - 164mm	¾" Female		
STP16004F	160mm	155 - 164mm	1" Female		
STM18002F/P	180mm	177 - 185mm	½" Female		
STM18003F/P	180mm	177 - 185mm	¾" Female		
STM18004F	180mm	177 - 185mm	1" Female		
STP20002F	200mm	195 - 203mm	½" Female		
STP20003F	200mm	195 - 203mm	¾" Female		
STP20004F	200mm	195 - 203mm	1" Female		
STP22503F	225mm	217 - 225mm	¾" Female	3	
STP25002F	250mm	250 - 258mm	½" Female		
STP25003F	250mm	250 - 258mm	¾" Female	3	
STP25004F	250mm	250 - 258mm	1" Female		
STP31502F	315mm	315mm	½" Female		
STP31503F	315mm	315mm	¾ " Female		
STP31504F	315mm	315mm	1" Female		

Gunmetal Banjo, EBCO Pushfit outlet for metric MDPE pipe

Part Number	Nominal Pipe	Strap Size (A)	Outlet	Box Quantity	Weight (Kg each)
STP03220Z	32mm	29 - 34mm	20mm BPF		
STP03225Z	32mm	29 - 34mm	25mm BPF		
STP05020Z	50mm	46 - 50..5mm	20mm BPF		
STP05025Z	50mm	46 - 50.5mm	25mm BPF		
STP06320Z	63mm	60 - 64mm	20mm BPF		
STP06325Z	63mm	60 - 64mm	25mm BPF	15	1.116
STP06332Z	63mm	60 - 64mm	32mm BPF		
STP09020Z	90mm	88 - 92mm	20mm BPF		
STP09025Z	90mm	88 - 92mm	25mm BPF	12	1.228
STP09032Z	90mm	88 - 92mm	32mm BPF	8	
STP11020Z	110mm	110 - 118mm	20mm BPF		
STP11025Z	110mm	110 - 118mm	25mm BPF	10	1.259
STP11032Z	110mm	110 - 118mm	32mm BPF		
STM12520Z	125mm	122 - 130mm	20mm BPF		
STM12525Z	125mm	122 - 130mm	25mm BPF		1.320
STM12532Z	125mm	122 - 130mm	32mm BPF	5	1.775
STP16020Z	160mm	155 - 163mm	20mm BPF		
STP16025Z	160mm	155 - 163mm	25mm BPF		
STP16032Z	160mm	155 - 163mm	32mm BPF	6	
STM18020Z	180mm	177 - 185mm	20mm BPF		
STM18025Z	180mm	177 - 185mm	25mm BPF	6	1.559
STM18032Z	180mm	177 - 185mm	32mm BPF	5	
STP20020Z	200mm	195 - 203mm	20mm BPF		
STP20025Z	200mm	195 - 203mm	25mm BPF		
STP20032Z	200mm	195 - 203mm	32mm BPF		
STP22525Z	225mm	217 - 225mm	25mm BPF		
STP25020Z	250mm	250 - 258mm	20mm BPF		
STP25025Z	250mm	250 - 258mm	25mm BPF		
STP25032Z	250mm	250 - 258mm	32mm BPF		
STP31520Z	315mm	315mm	20mm BPF		
STP31525Z	315mm	315mm	25mm BPF		
STP31532Z	315mm	315mm	32mm BPF		

Plastic Banjo, EBCO Pushfit outlet for metric MDPE pipe

Part Number	Nominal Pipe	Strap Size (A)	Outlet	Box Quantity	Weight (Kg each)
STP03225Z/P	32mm	29 - 34mm	25mm BPF	12	0.907
STP05020Z/P	50mm	46 - 50.5mm	20mm BPF		
STP05025Z/P	50mm	46 - 50.5mm	25mm BPF	12	0.640
STP06320Z/P	63mm	60 - 64mm	20mm BPF		
STP06325Z/P	63mm	60 - 64mm	25mm BPF	15	0.868
STP06332Z/P	63mm	60 - 64mm	32mm BPF	10	
STP09020Z/P	90mm	88 - 92mm	20mm BPF		
STP09025Z/P	90mm	88 - 92mm	25mm BPF	12	0.878
STP09032Z/P	90mm	88 - 92mm	32mm BPF	10	
STP11020Z/P	110mm	110 - 118mm	20mm BPF		
STP11025Z/P	110mm	110 - 118mm	25mm BPF	10	1.022
STP11032Z/P	110mm	110 - 118mm	32mm BPF	8	1.307
STM12520Z/P	125mm	122 - 130mm	20mm BPF		
STM12525Z/P	125mm	122 - 130mm	25mm BPF	8	1.090
STM12532Z/P	125mm	122 - 130mm	32mm BPF	8	0.719
STP16020Z/P	160mm	155 - 163mm	20mm BPF		
STP16025Z/P	160mm	155 - 163mm	25mm BPF		1.279
STP16032Z/P	160mm	155 - 163mm	32mm BPF		
STM18020Z/P	180mm	177 - 185mm	20mm BPF	6	
STM18025Z/P	180mm	177 - 185mm	25mm BPF	6	1.379
STM18032Z/P	180mm	177 - 185mm	32mm BPF		1.705
STP20025Z/P	200mm	195 - 203mm	25mm BPF	5	1.580
STP20032Z/P	200mm	195 - 203mm	32mm BPF	8	
STP22525Z/P	225mm	217 - 225mm	25mm BPF	5	1.685
STP25025Z/P	250mm	250 - 258mm	25mm BPF	3	1.907
STP25032Z/P	250mm	250 - 258mm	32mm BPF	3	2.180
STP31525Z/P	315mm	315mm	25mm BPF	5	
STP31532Z/P	315mm	315mm	32mm BPF	5	3.200

EBCO Self Tapping Ferrule Straps PE / PVC Pipe

Gunmetal Banjo, EBCO-B Compression fitting outlet for metric MDPE pipe

Part Number	Nominal Pipe	Strap Size (A)	Outlet	Box Quantity	Weight (Kg each)
STP03220B	32mm	29 - 34mm	20mm EBCO-B		
STP03225B	32mm	29 - 34mm	25mm EBCO-B		
STP05020B	50mm	46 - 50.5mm	20mm EBCO-B		
STP05025B	50mm	46 - 50.5mm	25mm EBCO-B		
STP06320B	63mm	60 - 64mm	20mm EBCO-B		
STP06325B	63mm	60 - 64mm	25mm EBCO-B		
STP09020B	90mm	88 - 92mm	20mm EBCO-B		
STP09025B	90mm	88 - 92mm	25mm EBCO-B		
STP09032B	90mm	88 - 92mm	32mm EBCO-B		
STP11025B	110mm	110 - 118mm	25mm EBCO-B		
STP11032B	110mm	110 - 118mm	32mm EBCO-B		
STM12520B	125mm	122 - 130mm	20mm EBCO-B		
STM12525B	125mm	122 - 130mm	25mm EBCO-B		
STM12532B	125mm	122 - 130mm	32mm EBCO-B		
STP16025B	160mm	155 - 163mm	25mm EBCO-B		
STP16032B	160mm	155 - 163mm	32mm EBCO-B		
STM18020B	180mm	177 - 185mm	20mm EBCO-B		
STM18032B	180mm	177 - 185mm	32mm EBCO-B		
STP20025B	200mm	195 - 203mm	25mm EBCO-B		
STP20032B	200mm	195 - 203mm	32mm EBCO-B		
STP25020B	250mm	250 - 258mm	20mm EBCO-B		
STP25025B	250mm	250 - 258mm	25mm EBCO-B		
STP25032B	250mm	250 - 258mm	32mm EBCO-B		
STP31520B	315mm	315mm	20mm EBCO-B		
STP31525B	315mm	315mm	25mm EBCO-B		
STP31532B	315mm	315mm	32mm EBCO-B		

Gunmetal Banjo, EBCO-S Compression fitting outlet for type B copper tube

Part Number	Nominal Pipe	Strap Size (A)	Outlet	Box Quantity	Weight (Kg each)
STP03215S	32mm	29 - 34mm	15mm Copper		
STP03222S	32mm	29 - 34mm	22mm Copper		
STP05015S	50mm	46 - 50.5mm	15mm Copper		
STP05022S	50mm	46 - 50.5mm	22mm Copper		
STP06315S	63mm	60 - 64mm	15mm Copper		
STP06322S	63mm	60 - 64mm	22mm Copper		
STP09015S	90mm	88 - 92mm	15mm Copper		
STP09022S	90mm	88 - 92mm	22mm Copper		
STP09028S	90mm	88 - 92mm	28mm Copper		
STP11015S	110mm	110 - 118mm	15mm Copper		
STP11022S	110mm	110 - 118mm	22mm Copper		
STM12515S	125mm	122 - 130mm	15mm Copper		
STM12522S	125mm	122 - 130mm	22mm Copper		
STM12528S	125mm	122 - 130mm	28mm Copper		
STP16015S	160mm	155 - 163mm	15mm Copper		
STP16022S	160mm	155 - 163mm	22mm Copper		
STP16028S	160mm	155 - 163mm	28mm Copper		
STM18022S	180mm	177 - 185mm	22mm Copper		
STP20015S	200mm	195 - 203mm	15mm Copper		
STP20022S	200mm	195 - 203mm	22mm Copper		
STP20028S	200mm	195 - 203mm	28mm Copper		
STP25015S	250mm	250 - 258mm	15mm Copper		
STP25022S	250mm	250 - 258mm	22mm Copper		
STP25028S	250mm	250 - 258mm	28mm Copper		
STP31515S	315mm	315mm	15mm Copper		
STP31522S	315mm	315mm	22mm Copper		
STP31528S	315mm	315mm	28mm Copper		

TALBOT Self Tapping Ferrule Straps PE / PVC Pipe

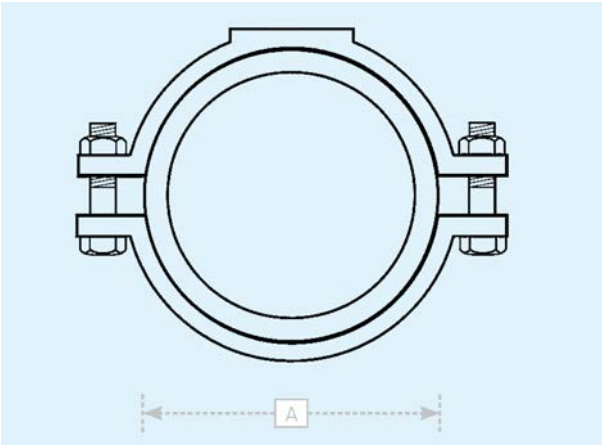

Gunmetal Banjo, Talbot Pushfit outlet for metric MDPE with liner

Part Number	Nominal Pipe Bore	Strap Size (A)	Outlet	Box Quantity	Weight (Kg each)
E3075	2" (50mm)	60 - 64mm	20mm PF		
E3080	2" (50mm)	60 - 64mm	25mm PF		
E3076	3" (80mm)	88 - 92mm	20mm PF		
E3083	3" (80mm)	88 - 92mm	25mm PF		
E3087	3" (80mm)	88 - 92mm	32mm PF		
E3077	4" (100mm)	110 - 118mm	20mm PF		
E3084	4" (100mm)	110 - 118mm	25mm PF	10	1.382
E3088	4" (100mm)	110 - 118mm	32mm PF	8	1.665
E3078	6" (150mm)	165 - 173mm	20mm PF		
E3085	6" (150mm)	165 - 173mm	25mm PF		
E3089	6" (150mm)	165 - 173mm	32mm PF	5	
E3079	8" (200mm)	217 - 225mm	20mm PF		
E3086	8" (200mm)	217 - 225mm	25mm PF		
E3090	8" (200mm)	217 - 225mm	32mm PF		
E11230	10" (250mm)	268 - 276mm	20mm PF		
E11149	10" (250mm)	268 - 276mm	25mm PF		

Plastic Banjo, Talbot Pushfit outlet for metric MDPE with liner

Part Number	Nominal Pipe Bore	Strap Size (A)	Outlet	Box Quantity	Weight (Kg each)
E3924	2" (50mm)	60 - 64mm	25mm PF		
E4795	3" (80mm)	88 - 92mm	20mm PF		
E5223	3" (80mm)	88 - 92mm	25mm PF	12	
E4796	3" (80mm)	88 - 92mm	32mm PF		
E3888*	3" (80mm)	88 - 92mm	32mm PF	15	
E4797	4" (100mm)	110 - 118mm	20mm PF		
E4056	4" (100mm)	110 - 118mm	25mm PF	10	
E4057	4" (100mm)	110 - 118mm	32mm PF	8	
E3889*	4" (100mm)	110 - 118mm	32mm PF		
E4798	6" (150mm)	165 - 173mm	20mm PF		
E4799	6" (150mm)	165 - 173mm	25mm PF	6	
E4800	6" (150mm)	165 - 173mm	32mm PF	6	
E3890*	6" (150mm)	165 - 173mm	32mm PF		
E8326	8" (200mm)	217 - 225mm	20mm PF		
E3926	8" (200mm)	217 - 225mm	25mm PF	5	
E8327	8" (200mm)	217 - 225mm	32mm PF		
E3891*	8" (200mm)	217 - 225mm	32mm PF	4	
E8325	10" (250mm)	268 - 276mm	32mm PF		

TALBOT Self Tapping Ferrule Straps PE / PVC Pipe

Gunmetal Banjo, Talbot Pushfit outlet for imperial MDPE no liner

Part Number	Nominal Pipe Bore	Strap Size (A)	Outlet	Box Quantity	Weight (Kg each)
E4388	1½" (40mm)	46 - 50.5mm	¾" PF		
E3066	2" (50mm)	60 - 64mm	½" PF		
E4635	2" (50mm)	60 - 64mm	¾" PF	15	1.021
E3069	3" (80mm)	88 - 92mm	½" PF		
E4463	3" (80mm)	88 - 92mm	¾" PF	12	1.13
E10525	3" (80mm)	88 - 92mm	1" PF	10	1.565
E4633	4" (100mm)	110 - 118mm	½" PF	10	1.082
E3072	4" (100mm)	110 - 118mm	¾" PF	10	1.182
E5146	4" (100mm)	110 - 118mm	1" PF	8	
E4632	6" (150mm)	165 - 173mm	½" PF		
E4732	6" (150mm)	165 - 173mm	¾" PF	6	
E5145	6" (150mm)	165 - 173mm	1" PF		
E3073	8" (200mm)	217 - 225mm	¾" PF	5	1.85
E3074	8" (200mm)	217 - 225mm	1" PF		

Plastic Banjo, Talbot Pushfit outlet for imperial PE no liner

Part Number	Nominal Pipe Bore	Strap Size (A)	Outlet	Box Quantity	Weight (Kg each)
E3861	2" (50mm)	60 - 64mm	½" PF		
E7948	3" (80mm)	88 - 92mm	½" PF		
E7941	3" (80mm)	88 - 92mm	¾" PF		
E7942	4" (80mm)	110 - 118mm	½" PF		
E7943	4" (80mm)	110 - 118mm	¾" PF		
E7944	4" (80mm)	110 - 118mm	1" PF		
E7945	6" (150mm)	165 - 173mm	½" PF		
E7946	6" (150mm)	165 - 173mm	¾" PF		
E7947	6" (150mm)	165 - 173mm	1" PF		
E3955	8" (200mm)	217 - 225mm	¾" PF		
E3887	8" (200mm)	217 - 225mm	1" PF		

Gunmetal Banjo, Talbot Pushfit outlet for Heavy Gauge IRS135 pipe no liner

Part Number	Nominal Pipe Bore	Strap Size (A)	Outlet	Box Quantity	Weight (Kg each)
E4218	3" (80mm)	88 - 92mm	½" HG		
E3070	4" (100mm)	110 - 118mm	½" HG	10	
E4417	6" (150mm)	165 - 173mm	½" HG		
E3071	8" (200mm)	217 - 225mm	½" HG		

Plastic Banjo, Talbot Pushfit outlet for Heavy Gauge IRS135 no liner

Part Number	Nominal Pipe Bore	Strap Size (A)	Outlet	Box Quantity	Weight (Kg each)
E7699	3" (80mm)	88 - 92mm	½" HG	12	0.949
E10006	3" (80mm)	88 - 92mm	¾" HG		
E10010	3" (80mm)	88 - 92mm	1" HG		
E3851	4" (100mm)	110 - 118mm	½" HG	10	
E10007	4" (100mm)	110 - 118mm	¾" HG	10	
E10011	4" (100mm)	110 - 118mm	1" HG	8	
E3850	8" (200mm)	217 - 225mm	½" HG	5	1.661
E11026	10" (250mm)	268 - 276mm	½" HG	3	

TALBOT Self Tapping Ferrule Straps PE / PVC Pipe

Metric Pipe sizes

Gunmetal Banjo, Talbot Pushfit outlet for metric MDPE with liner

Part Number	Nominal Pipe	Strap Size (A)	Outlet	Box Quantity	Weight (Kg each)
E3051	32mm	29 - 34mm	20mm PF		
E3057	32mm	29 - 34mm	25mm PF		
E3052	50mm	46 - 50.5mm	20mm PF		
E3058	50mm	46 - 50.5mm	25mm PF		
E3053	63mm	60 - 64mm	20mm PF		
E3059	63mm	60 - 64mm	25mm PF		1.040
E4789	63mm	60 - 64mm	32mm PF	10	1.471
E3054	90mm	88 - 92mm	20mm PF		
E3060	90mm	88 - 92mm	25mm PF		1.469
E3063	90mm	88 - 92mm	32mm PF		
E3055	125mm	122 - 130mm	20mm PF		1.382
E3061	125mm	122 - 130mm	25mm PF		
E3064	125mm	122 - 130mm	32mm PF		
E7197	160mm	155 - 163mm	20mm PF		
E3081	160mm	155 - 163mm	25mm PF		
E4181	160mm	155 - 163mm	32mm PF		
E3056	180mm	177 - 185mm	20mm PF		
E3062	180mm	177 - 185mm	25mm PF		
E3065	180mm	177 - 185mm	32mm PF		
E3082	200mm	195 - 203mm	25mm PF		
E4182	200mm	195 - 203mm	32mm PF		

Plastic Banjo, Talbot Pushfit outlet for metric MDPE with liner

Part Number	Nominal Pipe	Strap Size (A)	Outlet	Box Quantity	Weight (Kg each)
E3952	32mm	29 - 34mm	25mm PF	12	
E3857	50mm	46 - 50.5mm	20mm PF		
E3921	50mm	46 - 50.5mm	25mm PF	12	
E7225	63mm	60 - 64mm	20mm PF		
E3950	63mm	60 - 64mm	25mm PF	15	
E4788	63mm	60 - 64mm	32mm PF	10	
E7200	90mm	88 - 92mm	20mm PF		
E5226	90mm	88 - 92mm	32mm PF	10	
E7304	110mm	110 - 118mm	20mm PF		
E7305	110mm	110 - 118mm	25mm PF	10	
E7306	110mm	110 - 118mm	32mm PF	8	
E7201	125mm	122 - 130mm	20mm PF		
E5224	125mm	122 - 130mm	25mm PF	8	
E5227	125mm	122 - 130mm	32mm PF	8	
E7307	160mm	155 - 163mm	20mm PF		
E7308	160mm	155 - 163mm	25mm PF	6	
E7309	160mm	155 - 163mm	32mm PF	6	
E7202	180mm	177 - 185mm	20mm PF		
E5225	180mm	177 - 185mm	25mm PF	6	
E5228	180mm	177 - 185mm	32mm PF	5	
E3928	200mm	195 - 203mm	25mm PF		
E7970	200mm	195 - 203mm	32mm PF		

Gunmetal Banjo, Talbot Pushfit outlet for imperial PE no liner

Part Number	Nominal Pipe Bore	Strap Size (A)	Outlet	Box Quantity	Weight (Kg each)
E11378	50mm	46 - 50.5mm	½" PF		
E9557	50mm	46 - 50.5mm	¾" PF		
E4297	63mm	60 - 64mm	½" PF		
E4634	63mm	60 - 64mm	¾" PF	15	
E10110	125mm	122 - 130mm	½" PF		
E10118	180mm	177 - 185mm	¾" PF		

TALBOT Self Tapping Ferrule Straps PE / PVC Pipe

Plastic Banjo Talbot Pushfit for imperial PE no liner

Part Number	Nominal Pipe	Strap Size (A)	Outlet	Box Quantity	Weight (Kg each)
E8936	63mm	60 - 64mm	½" PF		
E8937	63mm	60 - 64mm	¾" PF		
E4296*	63mm	60 - 64mm	¾" PF		
E8033	160mm	155 - 163mm	1" PF		

** Gunmetal Top Cap*

Gunmetal Banjo, Talbot Pushfit outlet for Heavy Gauge IRS135 pipe no liner

Part Number	Nominal Pipe	Strap Size (A)	Outlet	Box Quantity	Weight (Kg each)
E4020	160mm	155 - 163mm	½" HG	6	

Plastic Banjo, Talbot Pushfit outlet for Heavy Gauge IRS135 pipe no liner

Part Number	Nominal Pipe	Strap Size (A)	Outlet	Box Quantity	Weight (Kg each)
E10363	125 mm	122 - 130mm	½" HG		
E8338	160 mm	155 - 163mm	½" HG	6	1.238
E10008	160 mm	155 - 163mm	¾" HG		
E10012	160 mm	155 - 163mm	1" HG	6	
E10364	180 mm	177 - 185mm	½" HG		
E10236	200 mm	195 - 203mm	½" HG	5	1.219
E11271	200 mm	195 - 203mm	¾ " HG		

EBCO Replacement Banjos

EBCO BSP Outlet

Female Outlet

Part Number	Stem	Outlet	Box Quantity	Weight (Kg each)
SFB202F	½"	½" Female	50	0.452
SFB303F	¾"	¾" Female	48	0.201
SFB404F	1"	1" Female	20	0.341
SFB606F	1 ½"	1 ½" Female		
SFB808F	2"	2" Female		

Male Outlet

Part Number	Stem	Outlet	Box Quantity	Weight (Kg each)
SFB303M	¾"	¾" Male		

EBCO Pushfit Outlet

Gunmetal Banjo

Part Number	Stem	Outlet	Box Quantity	Weight (Kg each)
SFB220Z	½"	20mm BPF	20	0.206
SFB325Z	¾"	25mm BPF	20	0.262

Plastic Banjo

Part Number	Stem	Outlet	Box Quantity	Weight (Kg each)
SFB325Z/P	¾ "	25mm BPF	20	0.079
SFB432Z/P	1"	32mm BPF	12	0.135

EBCO B Compression Fitting Outlet

Metric MDPE

Part Number	Stem	Outlet	Box Quantity	Weight (Kg each)
SFB220B	½"	20mm EBCO-B		
SFB325B	¾"	25mm EBCO-B		
SFB432B	1"	32mm EBCO-B		
SFB650B	1 ½"	50mm EBCO-B		
SFB863B	2"	63mm EBCO-B		

EBCO S Compression Fitting Outlet

Type B Copper Tube

Part Number	Stem	Outlet	Box Quantity	Weight (Kg each)
SFB215S	½"	15mm Copper		
SFB322S	¾"	22mm Copper		
SFB428S	1"	28mm Copper		
SFB642S	1 ½"	42mm Copper		
SFB854S	2"	54mm Copper		

Talbot Pushfit Outlet - Gunmetal Banjo

Metric MDPE with liner

Part Number	Stem	Outlet	Box Quantity	Weight (Kg each)
E3532	½"	20mm PF	40	0.178
E3533	¾"	25mm PF		
E3534	1"	32mm PF		
E3535	1 ½"	50mm PF		
E3536	2"	63mm PF		

Imperial PE no liner

Part Number	Stem	Outlet	Box Quantity	Weight (Kg each)
E8234	¾"	¾" PF		
E4776	1"	1" PF	20	
E8233	1 ½"	1 ½" PF		

Heavy Gauge IRS135 no liner

Part Number	NStem	Outlet	Box Quantity	Weight (Kg each)
E4885	½"	¾" HG	36	

Talbot Pushfit Outlet - Plastic Banjo

Metric MDPE with liner

Part Number	Stem	Outlet	Box Quantity	Weight (Kg each)
E3450	¾"	25mm PF	20	0.074
E3451	1"	32mm PF	12	0.125
E6538	1 ½"	50mm PF		
E6539	1"	63mm PF		

Imperial PE no liner

Part Number	Stem	Outlet	Box Quan-tity	Weight (Kg each)
E4456	¾"	½" PF		
E4470	1"	¾" PF		
E4457	1 ½"	1" PF		

Heavy Gauge IRS135 no liner

Part Number	Stem	Outlet	Box Quan-tity	Weight (Kg each)
E4729	½"	½" HG		

Replacement Stem

Part Number	Stem	Outlet	Box Quantity	Weight (Kg each)
SFRS22	½"	½" / ¾"	48	0.276
SFRS33	¾"	½" / ¾"	45	0.275
SFRS44	1"	1"	36	
SFRS66	1 ½"	1 ½"		
SFRS88	2"	2"		

ERHARD ABSP Service Saddle

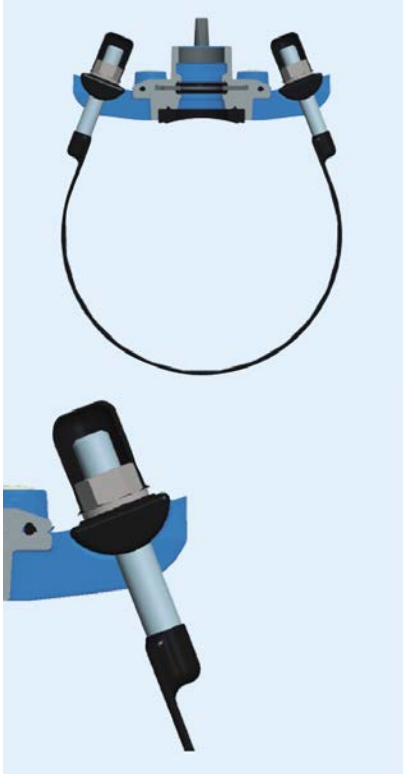

The preformed retaining brackets with a width of 48 mm for cast-iron and steel pipes or 90 mm for fibre cement pipes are securely and permanently attached to the pipe saddle through their special design features.

Flexible deployment

With the new ERHARD ABS Premium service valve it has been possible to reduce the number of required models dramatically. There is a separate casing type for each different combination of pressure stages and outlets. Models are available for pipes made of cast iron and steel, of coated cast iron and steel and of fibre cement.

Adjustments to the various pipe diameters are then simply made using an adjustable retaining bracket, which is combined with the appropriate casing according to requirements. Together with the optimised weight of the cases, this reduces both storage and transportation costs and facilitates their daily use.

ERHARD ABS Premium service valves are suitable for nominal sizes DN 80 to DN 300 and for pressure PN 16. A wide range of connection options facilitates the application.

Reliable drive

A reduction to just two moving parts ensures that the valve of the ERHARD ABS Premium service valve will continue to function reliably and can be moved dependably for years to come:

1. *Pinion Shaft with o-rings*
2. *Collar bush with o-rings*
3. *Washer*
4. *Rotary Disk*
5. *Connection Cover for outlet Rp 1 ½ or plasson system*
6. *Connection piece*
7. *Sealing ring*
8. *Saddle strap*

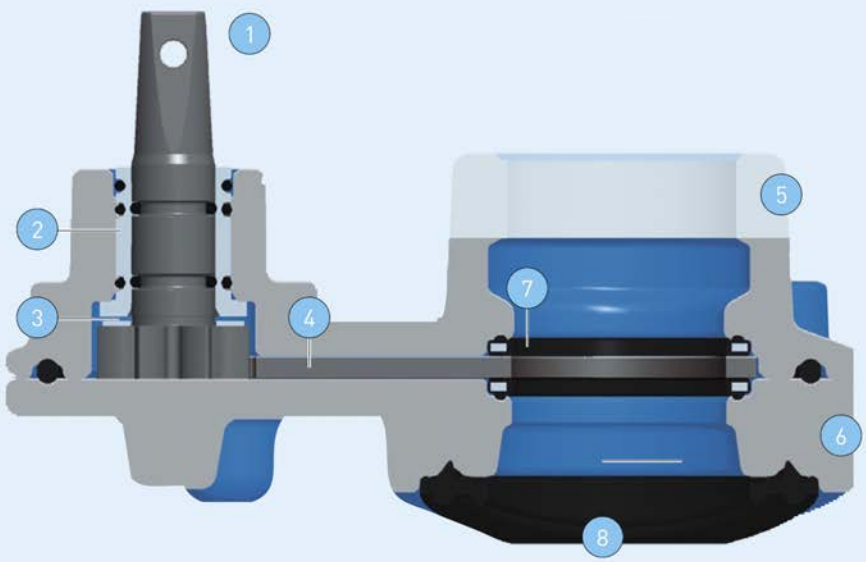

ERHARD ABSP Service Saddle

- The pinion shaft made of stainless steel is securely aligned over the middle of the pipe and mounted in a corrosion protected shaft bushing. It has a standardised square connection.

- The rotary movement is then transferred to the rotary disc via an interlocking system. The 4 mm thickness of the material guarantees a high level of dependability even under a high operating pressure. The smooth surface of the disc prevents the build up of deposits and damage to the sealing rings. The shearing principle between the rotary disc and the steel-sheathed sealing rings also ensures that the parts are self-cleaning.

Opening and closing takes place with a 1¾ rotation. This ensures that there is no water hammer with high flow rates. The pipe saddle also has robust and reliable end stops which easily surpass the values required by the relevant standard.

Sealing system further optimised

Even the seals of the ERHARD ABS Premium service valve have been further improved. In addition to the multiple-sealing o-rings [9] on the pinion shaft, the steel-sheathed sealing rings [10] on the rotary disc and the double gasket, this above all concerns the newly conceived saddle seal with the innovative duo-sealing system [11]. The system, which is made of EPDM in the drinking water model and of NBR for the gas model, ensures the sealant function is proportionate to the pressure, since the sealing lip seals tighter as the pressure increases.

Reliable corrosion protection

All ERHARD premium service valves are coated as standard with ERHARD EKB fusion bonded epoxy, which complies with the requirements of the quality mark RAL-GZ 662 of the "Quality Association for the Heavy Duty Corrosion Protection of Powder Coated Valves and Fittings" (GSK). The coating thickness is at least 250 µm. Epoxy is physiologically harmless for use with drinking water and has, for example, confirmed certification from the DVGW-TZW Research Centre in Karlsruhe and the Hygiene Institute of Gelsenkirchen.

Alternatively, ERHARD ABS Premium service valves are also available fully enammled with a special fiber enamel. This variation provides the very highest standard in drinking water protection and protection from encrustation, as well as ensuring the longest product life. The highly resistant ERHARD Pro-Enamel also provides the valve with outstanding external protection and increased impact strength. The model complies with the requirements of DIN 51178.

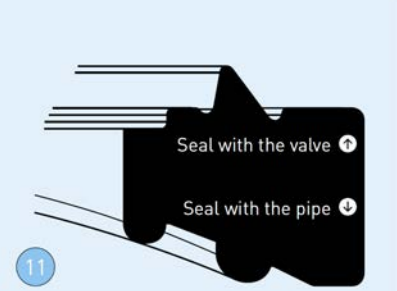

The o-rings [9], the steel-sheathed sealing rings [10], the rotary disc and the new saddle seal with the duo-sealant system [11], as well as the tried and tested drive with toothed washer and disc [12] guarantee reliable operations even after years of service.

ERHARD ABSP Service Saddle

ERHARD ABS Premium Service Valve

Connection to pipe type and diameter through seperatly ordered strap

With Epoxy Coating

DN	Outlet	Code
80 - 300	vert. Rp 1 ½	969110
80 - 300	horiz. Rp 1 ½	969114

With Enamel Coating

DN	Outlet	Code
80 - 300	vert. Rp 1 ½	969111
80 - 300	horiz. Rp 1 ½	969115

Strap

For cost iron and steel pipes (strap width 48mm)

DN	Pipe OD	Code
80	87 - 104	969050-80
100	110 - 125	969052-100
125	136 - 152	969054-125
150	163 - 179	969056-150
200	215 - 230	969058-200
250	270 - 283	969060-250
300	320 - 335	969062-300

For asbestos cement pipes (strap width 90mm)

DN	Pipe OD	Code
80	96 - 115	969382
100	117 - 138	969383
125	145 - 167	969384
150	176 - 197	969385
200	232 - 253	969386
250	284 - 302	969387
300	340 - 357	969388

Service Valve for PVC Pipe

For cast iron and steel pipes (strap width 48mm)

DN	Outlet	Top Part Epoxy Coated	Top Part Enamelled
80	vert. Rp 1 ½	969485	969492
80	hor. Rp 1 ½	969499	969506
100	vert. Rp 1 ½	969486	969493
100	hor. Rp 1 ½	969500	969507
125	vert. Rp 1 ½	969487	969494
125	hor. Rp 1 ½	969501	969508
150	vert. Rp 1 ½	969488	969495
150	hor. Rp 1 ½	969502	969509
200	vert. Rp 1 ½	969489	969496
200	hor. Rp 1 ½	969503	969510
250	vert. Rp 1 ½	969490	969497
250	hor. Rp 1 ½	969504	969511
300	vert. Rp 1 ½	969491	969498
300	hor. Rp 1 ½	969505	969512

Talbot Pushfit - Fittings for Water Pipe

The Talbot Pushfit connection is a tried and tested method of connecting low, medium and high density metric polyethylene water pipe from 16mm to 63mm.

Benefits

- User Friendly
  The Talbot Pushfit fitting is quick and easy to use with no nuts to leave undone , simply push the pipe into the fitting.

- Stronger Than The Pipe
  The fittings grip and seal on the pipe increases with water pressure and tensile load. This means that the PE pipe will burst or neck before the connection fails. The Talbot Pushfit fitting is pressure rated PN 16.

- Tough and Robust
  Talbot Pushfit fittings are manufactured from high performance materials for resistance to distortion and corrosion and for strong threaded connections.

- Adaptor from Imperial to Metric pipe
  Select the fitting type you need, and using the imperial components that are available, convert the fitting to an adaptor.

WRAS APPROVED PRODUCT

Talbot Grippa Universal Service Connector

The Talbot Grippa is a universal fitting that connects onto a wide variety of existing lead, galvanised iron and copper pipes with no change of components. The range consists of just three fittings which suit all metal pipes with outside diameters of 15mm (¾") to 34mm (⅜").

Benefits

- Universal
  One fitting securely connects onto lead, copper and galvanised iron service pipes.

- Simple to install
  Simply push the pipe into the fitting and tighten, no loose assembly of components or special preparation of the pipe or cutting of threads.

- Cost Effective
  With only three fittings covering the majority of lead, copper and galvanised iron pipe sizes, stock is dramatically reduced.

Range Information				
Universal End				**PE End - Suits:**
	⅜" Grippa	½" Grippa	¾" Grippa	Metric BS6572 and 6730 pipe with a liner and DIN and ISO pipes. (Blue grip ring, black 'O' ring marked 'M'), or Imperial B.S pipe (black grip ring, black 'O' ring.
Pipe OD range	15-21mm	21-27mm	27-34mm	
Type of pipe				
Lead	⅜" 4lb-6lb	½" 5lb-9lb	¾" 7lb-11lb	
Galvanised Iron	⅜"	½"	¾"	
Copper	15mm, ½"	22mm, ¾"	28mm, 1"	

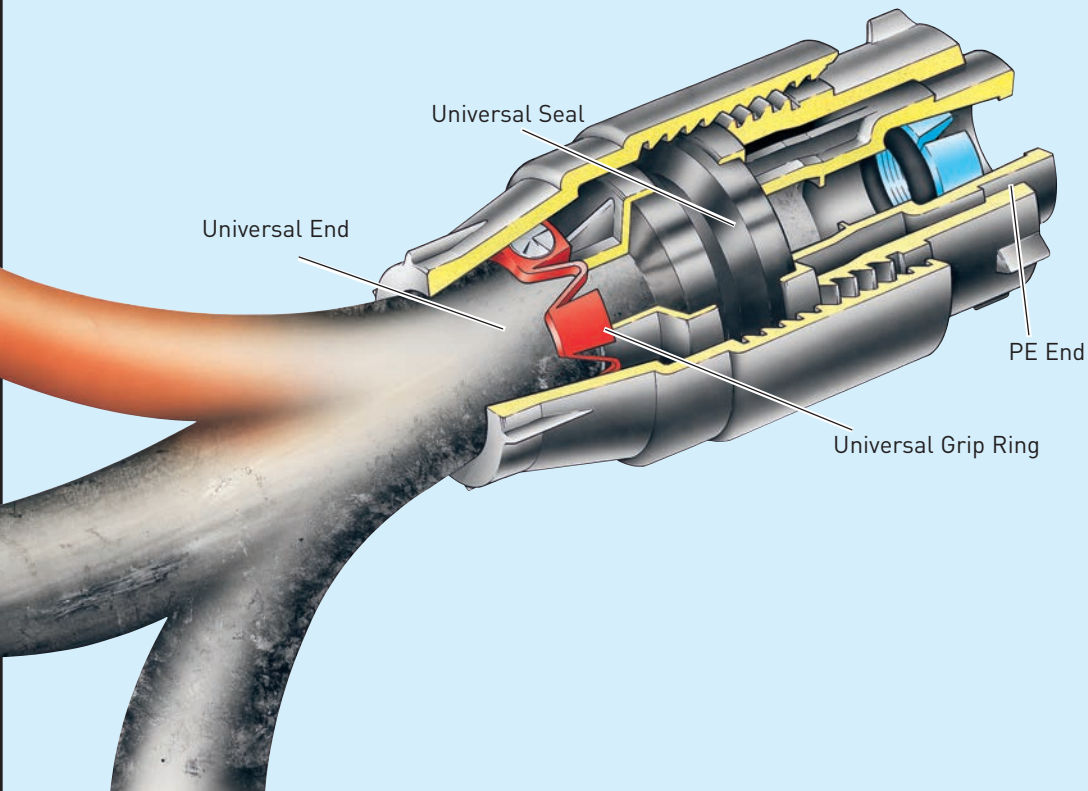

Extractors - Plastic

Code	Size	Bag Quantity	Weight
E2946	20mm (½")	10 sets	0.051
E2947	25mm (¾")	10 sets	0.065
E2948	32mm (1")	10 sets	0.063

Extractors - Metal

Code	Size	Bag Quantity	Weight
E2935	20mm (½")	1 set	0.041
E2936	25mm (¾")	1 set	0.041
E2937	32mm (1")	1 set	0.064
E2554	40mm (1¼")	1 set	0.086
E2938	50mm (1½")	1 set	0.108
E2939	63mm (2")	1 set	0.179
E2940	90mm	1 set	
E2941	125mm	1 set	
E2942	180mm	1 set	

Bevellers - Metal

Code	Size	Bag Quantity	Weight
1775	20mm (½")	1	0.036
1776	25mm (¾")	1	0.167
1777	32mm (1")	1	0.088
2534	40mm (1¼")	1	0.120
1779	50mm (1½")	1	0.177
1780	63mm (2")	1	0.588

Liners for PE Pipe

Code	Size	Bag Quantity	Weight
1829	20mm (SDR 9)	10	0.004
1830	25mm (SDR 11)	10	0.005
1832	32mm (SDR 11)	10	0.010
8009	40mm (SDR 11)		
4230	50mm (SDR 11)	5	0.033
4217	63mm (SDR 11)	5	0.059

Pushfit Connections

Components, PE - Grip Rings

Code				Size	Bag Quantity	Weight
Metric	Imperial	HG	NG			
1890	1884	9760	10154	20mm x (½")	10	
1891	2634	9723	10156	25mm x (¾")	10	
1894	1887	9725	10157	32mm x (1")	10	
6159	6160	-	-	40mm x (1¼")	5	
7745	1889	-	-	50mm x (1½")	5	
7746	2658	-	-	63mm x (2")	5	

Components, PE - 'O' Rings

Code				Size	Bag Quantity	Weight
Metric	Imperial	HG	NG			
1861	1856	1855	3355	20mm x (½")	10	
1862	1857	1857	1862	25mm x (¾")	10	
1863	1859	1859	2599	32mm x (1")	10	
7315	6251	-	-	40mm x (1¼")	5	
1864	1860	-	-	50mm x (1½")	5	
1865	2598	-	-	63mm x (2")	5	

Components, Lead Grip & 'O' Rings

Code		Size	Bag Quantity	Weight
Metric	Imperial			
-	9068	Grip Ring - ¾" 9lb	10	
-	9069	Grip Ring - 1" 16lb	10	
-	9116	'O' Ring - ¾" 9lb	10	
-	9117	'O' Ring - 1" 16lb	10	

Converters, Pushfit x Female Thread

Code		Size	Bag Quantity	Weight
Metric	Imperial			
E5062	-	20mm x ½" Fl	5	0.027
E5061	-	20mm x ¾" Fl	5	0.028
E5060	-	25mm x ½" Fl	5	
E5058	-	25mm x ¾" Fl	5	0.042
E5059	-	25mm x 1" Fl	5	0.045
E5057	-	32mm x 1" Fl	5	0.073
E5056	-	32mm x 1¼" Fl	5	0.081

Talbot Pushfit - Leadfit

Talbot Pushfit - PE To Lead Pipe Conversion

The Talbot Pushfit connecter has for many years provided a quality and reliable way of joining PE pipe for potable water distribution networks throughout the world. This tried and tested method of connecting pipe has now been developed to suit lead pipe and offers the same high levels of performance associated with the original Talbot Pushfit fitting. Talbot Leadfit fittings are quick and easy to assemble. The pipe is simply pushed fully home into the fitting, past both the grip and 'O' ring, no further tightening is needed. The Pushfit principle ensures that the pipe is held securely within the fitting and seals against working pressures up to 16 bar.

The Leadfit fitting utilises a standard Talbot Pushfit body with a set of specially designed inter-changeable components that enable the Talbot Leadfit fitting to grip and seal on lead pipe.

Benefits

- Quick to Install
  Both the lead and PE pipe are simply pushed into the fitting - no loose nuts or other fixings to worry about.

- Stronger Than The Pipe
  In tests Leadfit is consistently stronger than the lead or PE pipe - even at pressures considerably above normal mains working pressure.

- Ideal in Cramped Conditions
  The simplicity of Leadfit makes it ideal when making transitions from lead pipe in poorly accessed areas, like under a kitchen sink. No spanners or tools are needed to make an effective installation.

The Talbot Leadfit fitting is available in two forms, firstly a range of pre-assembled fittings for connection to lead pipe. Lead to PE adaptors, lead to female or male threaded adaptors as well as lead to copper adaptors are all available. An alternative to buying a pre-assembled fitting and in order to give users full advantage of the flexibility and extensive range of the Talbot Pushfit connection, Talbot Leadfit components are also supplied separately and can quickly and easily convert any Pushfit fitting into a fitting for lead pipe. Fittings and components are available for lead pipe in sizes 3/4" 9lb (29.41mm) using 32mm Pushfit bodies and 1" 16lb (39.22mm) using 40mm Pushfit bodies.

Pushfit Assembly and Dismantling Instructions

User experience indicates that Pushfit fittings cope better with adverse site conditions than compression fittings. However if a connection failure occurs please check that:

- The pipe has been pushed fully home.
- Correct components have been used.
- The 'O' ring or the grip ring are not damaged.
- Pipe is not excessively scored at the sealing area.

Pushfit Assembly Instructions

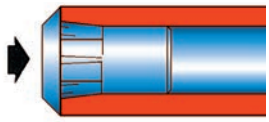

1a. For metric British standard pipe only, push the correct liner fully into the pipe.

1b. For imperial BS, DIN and ISO pipe only. Bevel the pipe. No liner is required.

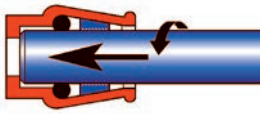

2. Push the pipe fully into the fitting with a slight twist.

3. Ensure that the pipe passes two points of resistance and is fully seated.

Pushfit Dismantling Instructions

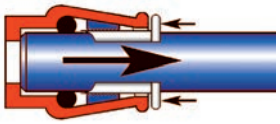

1. Slide extractors home and withdraw the pipe.

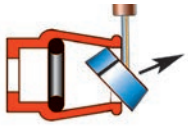

2. Extract the grip ring with a screwdriver. Do not re-use the grip ring.

3. Extract and inspect the 'O' ring - replace it if damaged.

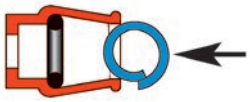

4. Insert a new grip ring by forming a figure '6' and pressing it in.

5. Ensure the grip ring is inserted the correct way round.

Grippa Assembly Instructions

Set out below are the assembly instructions for the universal end of the Grippa fitting. For instructions on how to assemble the Pushfit end of the connection please refer to the Pushfit assembly instructions shown above.

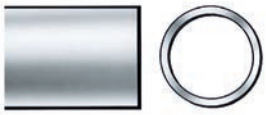

1. Cut the pipe square and ensure it is clean, round and within tolerance. Scrape off any loose paint or deep scratches.

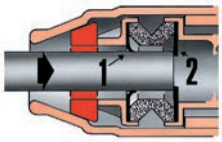

2. Push the universal end of the fitting onto the pipe, PAST the first point of resistance and UP TO the second.

3. Hand tighten the nut on the PE end.

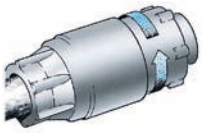

4. Tighten with a spanner or wrench a further $1^1/2$ turns.

EBCO-B Fittings for PE Pipe

The EBCO-B connector is designed for use with PE pipes. The fitting is made from virtually corrosion immune gunmetal so will give many years of trouble free service in even the most aggressive of ground conditions and the seal created is secure, providing a leak free connection. This security combined with the product's robust gunmetal construction offers customers the knowledge that any connections made using the EBCO-B are secure, robust and reliable.

The EBCO-B connection is available in sizes from 20mm to 63mm in diameter. The fitting will also suit the imperial equivalents to these metric pipes using simply interchanged internal components.

Benefits

- The EBCO-B compression fitting can be used on either metric or imperial PE pipes from 20mm to 63mm in diameter. (Please specify pipe type and class when ordering to enable the correct product to be supplied.)
- Made from corrosion immune gunmetal, EBCO-B compression fittings will provide years of trouble free service in even the most arduous of ground conditions.
- The extensive range of EBCO-B compression fittings covers the majority of operational requirements with stopcocks and ferrules also being available with EBCO compression outlet.

Technical Data

Sizes:	20mm (½") to 63mm (2")	
Thread Types:	BS21, (BS EN 10226) BS EN ISO 228	
Material:	Body & Thrust nut:	Gunmetal BS EN 1982:2008 CC491K (formerly BS1400 LG2)
	Serrated inserts:	Copper
	Compression gland:	EPDM/Nitrile
	Friction washer:	Polypropylene

EBCO-B Assembly Instructions

Ensure the pipe is cut square then disassemble the end of the fitting to be connected, slide the thrust nut (1) then the friction washer (2), then the compression gland (3) over the end of the pipe to be connected. Insert the serrated insert (4) into the pipe and securely hammer it fully home with a soft faced mallet. Place the end of the pipe into the fitting's body (5) and screw the thrust nut fully into the body, securely locating the friction washer and sealing rubber inside the body of the fitting. Once the thrust nut has been hand tightened use a spanner and tighten a further 1 ½ to 2 turns to form a fully sealed connection. The connection is now made.

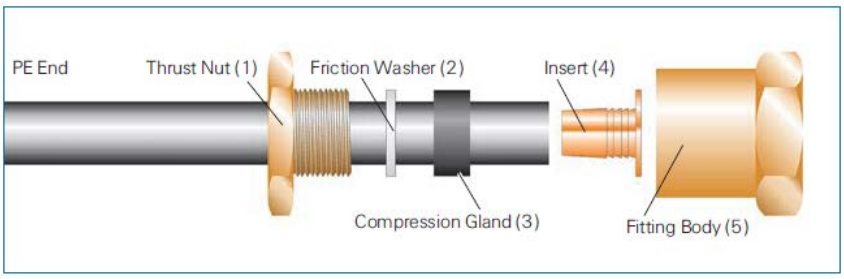

EBCO-B Fittings for PE Pipe

EBCO B Connectors Metric

Code	Size	Bag Quantity	Weight (kg)
GCB20	20mm		0.203
GCB25	25mm		0.293
GCB32	32mm		
GCB50	50mm		1.067
GCB63	63mm		1.295

EBCO B Connectors Imperial

Code	Size	Bag Quantity	Weight (kg)
GCB02	½" BS1972 C		0.204
GCB02/1	½" BS3284 D		
GCB03	¾" BS1972 C		0.301
GCB03/1	¾" BS3284 D		
GCB04	1" BS1972 C		0.459
GCB04/1	1" BS3284 D		
GCB06	1 ½" BS1972 C		1.07
GCB08	2" BS1972C		

EBCO B Connectors Metric/Imperial

Code	Size	Bag Quantity	Weight (kg)
GCB0650	1 ½" BS1972C X 50mm		
GCB0863	2" BS1972 C X 63mm		1.54
GCB0863/1	2" BS3284 D X 63mm		

EBCO B Reducing Connectors Metric

Code	Size	Bag Quantity	Weight (kg)
GCB2025	20mm x 25mm		0.318
GCB2032	20mm x 32mm		
GCB2532	25mm x 32mm		0.098
GCB2550	25mm x 50mm		
GCB3220	32mm x 20mm		
GCB3225	32mm x 25mm		0.098
GCB3263	32mm x 63mm		1.559
GCB5020	50mm x 20mm		
GCB5032	50mm x 32mm		
GCB6320	63mm x 20mm		
GCB6325	63mm x 25mm		
GCB6350	63mm x 50mm		

EBCO B Reducing Connectors Imperial

Code	Size	Bag Quantity	Weight (kg)
GCB0304	¾" BS1972 C x 1" BS1972 C		
GCB0603	1 ½" BS1972 C x ¾" BS1972 C		

EBCO-B Fittings for PE Pipe

EBCO B Joint Reducer Metric

Code	Size	Bag Quantity	Weight (kg)
GJR2520B	25mm x 20mm		0.156
GJR3225B	32mm x 25mm		0.244
GJR5032B	50mm x 32mm		
GJR6332B	63mm x 32mm		
GJR6350B	63mm x 50mm		

EBCO B Joint Reducer Imperial

Code	Size	Bag Quantity	Weight (kg)
GJR0302B	¾" BS1972 C x ½" BS1972 C		
GJR0403B	1" BS1972 C x ¾" BS1972 C		
GJR0604B	1 ½" BS1972 C x 1" BS1972 C		

EBCO B Male Adaptors Metric

Code	Size	Bag Quantity	Weight (kg)
GAB2M20	20mm x ½" M		0.163
GAB3M25	25mm x ¾" M		
GAB4M32	32mm x 1" M		0.369
GAB6M50	50mm x 1 ½" M		0.912
GAB8M63	63mm x 2" M		1.314

EBCO B Male Adaptors Imperial

Code	Size	Bag Quantity	Weight (kg)
GAB2M02	½" BS1972 C x ½" M		0.164
GAB2M02/1	½" BS3284 D x ½" M		
GAB3M03	¾" BS1972 C x ¾" M		0.024
GAB3M03/1	¾" BS3284 D x ¾" M		
GAB4M04	1" BS1972 C x 1" M		0.373
GAB4M04/1	1" BS3284 D x 1" M		
GAB6M06	1 ½" BS1972 C x 1 ½" M		
GAB8M08	2" BS1972 C x 2" M		

EBCO-B Fittings for PE Pipe

EBCO B Female Adaptors Metric

Code	Size	Bag Quantity	Weight (kg)
GAB2F20	20mm x ½" F		0.171
GAB3F25	25mm x ¾" F		0.247
GAB4F32	32mm x 1" F		0.411
GAB6F50	50mm x 1 ½" F		1.008
GAB8F63	63mm x 2" F		1.359

EBCO B Female Adaptors Imperial

Code	Size	Bag Quantity	Weight (kg)
GAB2F02	½" BS1972 C x ½" F		0.172
GAB2F02/1	½" BS3284 D x ½" F		
GAB3F03	¾" BS1972 C x ¾" F		0.25
GAB3F03/1	¾" BS3284 D x ¾" F		
GAB4F04	1" BS1972 C x 1" F		0.411
GAB4F04/1	1" BS3284 D x 1" F		
GAB6F06	1 ½" BS1972 C x 1 ½" F		
GAB8F08	2" BS1972 C x 2" F		

EBCO B Elbows

Code	Size	Bag Quantity	Weight (kg)
GEB20	20mm		
GEB25	25mm		
GEB32	32mm		
GEB3225R	32mm x 25mm		
GEB50	50mm		
GEB63	63mm		

EBCO B Equal Tees Metric

Code	Size	Bag Quantity	Weight (kg)
GTB20	20mm		
GTB25	25mm		
GTB32	32mm		
GTB50	50mm		2.832
GTB63	63mm		

EBCO B Equal Tees Imperial

Code	Size	Bag Quantity	Weight (kg)
GTB02	½" BS1972 C		
GTB02/1	½" BS3284 D		
GTB03	¾" BS1972C		
GTB03/1	¾" BS3284 D		
GTB04	1" BS1972 C		
GTB04/1	1" BS3284 D		
GTB06	1 ½" BS1972 C		
GTB08	2" BS1972 C		

EBCO-B Fittings for PE Pipe

EBCO B Unequal Tees Metric

Code	Size	Bag Quantity	Weight (kg)
GTB2520R	25mm x 25mm x 20mm		
GTB3220R	32mm x 32mm x 20mm		
GTB3225R	32mm x 32mm x 25mm		
GTB502525R	50mm x 25mm x 25mm		
GTB5020R	50mm x 50mm x 20mm		3.227
GTB5025R	50mm x 50mm x 25mm		
GTB5032R	50mm x 50mm x 32mm		3.159
GTB6320R	63mm x 63mm x 20mm		
GTB6325R	63mm x 63mm x 25mm		
GTB6332R	63mm x 63mm x 32mm		
GTB6350R	63mm x 63mm x 50mm		

EBCO B Unequal Tees Imperial

Code	Size	Bag Quantity	Weight (kg)
GTB0403R	1" BS 1972 C x 1" BS 1972 C x ¾" BS1972 C		
GTB0803R	2" BS 1972 C x 2" BS 1972 C x ¾" BS1972 C		
GTB0804R	2" BS 1972 C x 2" BS 1972 C x 1" BS1972 C		
GTB0806R	2" BS 1972 C x 2" BS 1972 C x 1 ½" BS1972 C		

EBCO B Stop End Imperial

Code	Size	Bag Quantity	Weight (kg)
GSB2	2"		

EBCO B Straight Meter Union

Code	Size	Bag Quantity	Weight (kg)
GSMC20B	20mm x ¾" FI		0.229

EBCO-S
Gunmetal Type B Copper Compression Fittings

The robust and easy to use EBCO range of Type B copper adaptors are manufactured in gunmetal and conform to BS EN 1254. These fittings are suitable for use with half hard copper tube to BS EN 1057:2006.

Benefits

- Made from virtually corrosion immune gunmetal, EBCO Type copper tube fittings will provide years of trouble free service in even the most arduous of ground conditions.
- The extensive range offered covers the majority of operational requirements.

Technical Data

Sizes:	½ " to 2"
Material:	Gunmetal BS EN 1982:2008 CC491K (formerly BS1400 LG2)
Thread Type:	BS21 , (BS EN 10226) or BS EN ISO 228

Gunmetal Type B Copper Compression Fittings Assembly Instructions

Disassemble the end of the fitting to be connected, slide the integral compression nut and ring (1) assembly over the pipe end. Using an appropriately sized flaring tool (2) bell out the end of the copper pipe. Re assemble the fitting ensuring that the pipe sits snugly against the cone on the fitting body (3). Tighten the compression nut fully to create an end load resistant and watertight connection. The connection is now made.

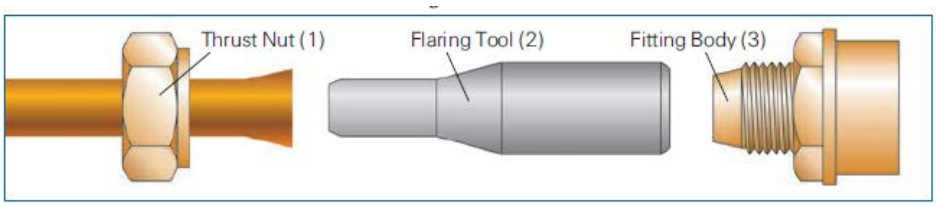

EBCO-S
Gunmetal Type B Copper Compression Fittings

EBCO S Connectors

Code	Size	Bag Quantity	Weight (kg)
GCC22S	22mm		0.252
GCC28S	28mm		
GCC54S	54mm		

EBCO S Male Adaptors

Code	Size	Bag Quantity	Weight (kg)
GAC02M15S	15mm x ½" M		0.108
GAC03M22S	22mm x ¾" M		
GAC04M28S	28mm x 1" M		
GAC08M54S	54mm x 2" M		

EBCO S Female Adaptors

Code	Size	Bag Quantity	Weight (kg)
GAC02F15S	15mm x ½" F		0.118
GAC03F22S	22mm x ¾" F		
GAC04F28S	28mm x 1" F		
GAC06F42S	42mm x 1 ½" F		0.662
GAC06F54S	54mm x 1 ½" F		

EBCO S Elbows

Code	Size	Bag Quantity	Weight (kg)
GEC15S	15mm		
GEC22S	22mm		0.537
GEC28S	28mm		

EBCO-S
Gunmetal Type B Copper Compression Fittings

EBCO S Elbow Male Adaptors

Code	Size	Bag Quantity	Weight (kg)
GEC15S02M	15mm x ½" M		
GEC22S03M	22mm x ¾" M		
GEC28S04M	28mm x 1" M		

EBCO S Elbow Female Adaptors

Code	Size	Bag Quantity	Weight (kg)
GEC15S02F	15mm x ½" F		
GEC22S03F	22mm x ¾" F		0.326
GEC28S04F	28mm x 1" F		0.598

EBCO S Tee

Code	Size	Bag Quantity	Weight (kg)
GTC15S	15mm x 15mm x 15mm		
GTC22S	22mm x 22mm x 22mm		
GTC28S	28mm x 28mm x 28mm		
GTC2822S	28mm x 28mm x 22mm		

EBCO S / EBCO B Adaptors

Code	Size	Bag Quantity	Weight (kg)
GAC22S25B	22mm S x 25mm B		
GAC35S50B	35mm S X 50mm B		
GAC42S50B	42mm S x 50mm B		
GAC42S63B	42mm S x 63mm B		
GAC54S63B	54mm S x 63mm B		

EBCO Gunmetal BSP Threaded Fittings Technical Data

The EBCO range of traditional gunmetal pipe fittings for threaded pipe is robust and contains a wide variety of product types and sizes. The fitting's threads are to BS EN 10226-1 (BS21) and products are available in sizes ¼" to 4".

Sizes:	¼" to 4"
Thread:	BS EN 10226-1 (BS21)
Materials:	Gunmetal BS EN 1982:2008 CC491K (formerly BS1400 LG2)

British Standard Pipe thread (BSP) is a family of standard screw thread types that has been adopted internationally for interconnecting and sealing pipe ends by mating an external (male) with an internal (female) thread.

Two types of thread are distinguished:

- Parallel threads, which have a constant diameter.
- Taper threads, whose diameter increases or decreases along the length of the thread.

Jointing threads: These are pipe threads for joints made pressure-tight by the mating of the threads. They use a taper external (male) thread, and a parallel internal (female) thread. Best practice is to always use a jointing compound on the threads. Minimum order quantities may apply.

Benefits:

- Made from corrosion immune gunmetal, EBCO threaded pipe fittings will provide years of trouble free service in even the most arduous of ground conditions.
- The extensive range of EBCO threaded pipe fittings will cover the majority of operational needs.

Application:

These products are designed for use with cold potable water. Save with the express written permission of TALIS-UK Ltd, no warranty is given for any other use. Dimensions and weights are provided for guidance only.

Safety:

As with all industrial products it is important to take adequate safety precautions such as the use of adequate protective clothing like gloves, overalls, eye protection and safety footwear during installation and maintenance of this product.

Technical Help:

For further technical data, product specifications and general information please contact Customer Service on +44 (0)845 077 9797.

90° Equal Elbow Female x Female

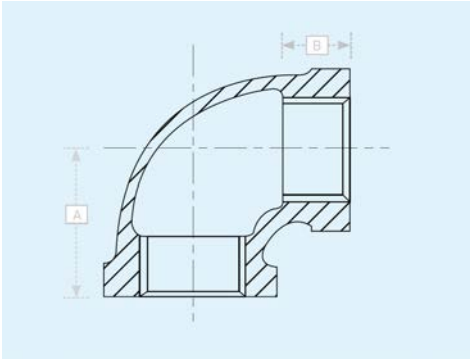

Part Number	Size	A (ins)	B (ins)	Pack Quantity			Weight (Kg each)
				Bag	Box	Carton	
BSPE015F	⅜"	0.82	0.36	5	25	300	0.07
BSPE02F	½"	1.01	0.43	5	25	200	0.11
BSPE03F	¾"	1.18	0.50	5	25	100	0.18
BSPE04F	1"	1.43	0.58	5	25	75	0.28
BSPE05F	1 ¼"	1.69	0.67	5		50	0.49
BSPE06F	1 ½"	1.84	0.70	5		35	0.63
BSPE08F	2"	2.12	0.75	1		20	0.91

90° Elbow Male x Female

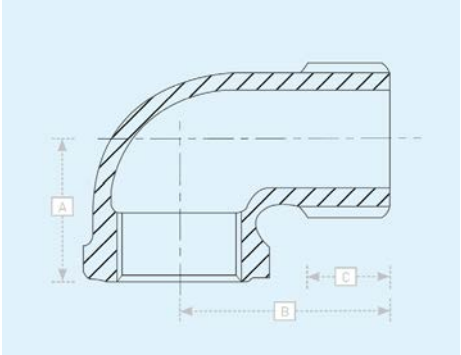

Part Number	Size	A (ins)	B (ins)	C (ins)	Pack Quantity			Weight (Kg each)
					Bag	Box	Carton	
BSPE01MF	¼"	0.71	1.11	0.41	5	25	250	0.04
BSPE015MF	⅜"	0.82	1.24	0.41	5	25	300	0.07
BSPE02MF	½"	1.01	1.48	0.54	5	25	200	0.10
BSPE03MF	¾"	1.18	1.65	0.55	5	25	100	0.17
BSPE04MF	1"	1.43	1.98	0.69	5	25	75	0.26
BSPE06MF	1 ½"	1.84	2.46	0.73	5		35	0.60
BSPE08MF	2"	2.12	2.88	0.76	1		20	0.89

45° Equal Elbow Female x Female

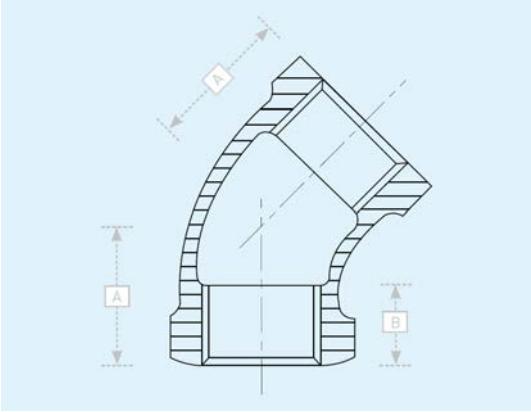

Part Number	Size	A (ins)	B (ins)	Pack Quantity			Weight (Kg each)
				Bag	Box	Carton	
BSP45E03F	¾ "	0.89	0.50	5	25	100	0.15

90° Reducing Elbow Female x Female

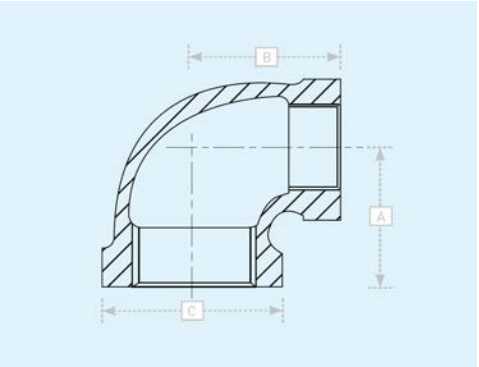

Part Number	Size	A (ins)	B (ins)	C (ins)	Pack Quantity			Weight (Kg each)
					Bag	Box	Carton	
BSPE0301F	¾" x ¼"	1.08	1.11	1.42	5	25	100	0.12
BSPE1002F	2 ½" x ½"	2.20	2.60	3.49	1		15	0.90
BSPE1005F	2 ½" x 1 ¼"	2.38	2.60	3.49	1		16	1.16

Equal Cross Female All Ends

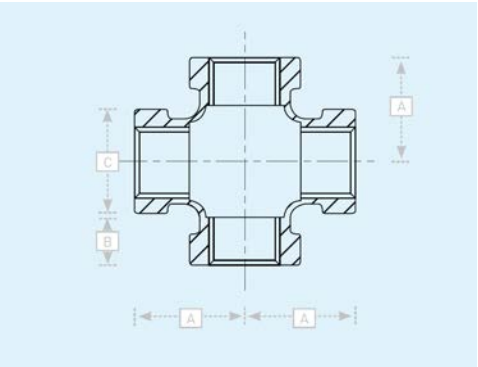

Part Number	Size	A (ins)	B (ins)	C (ins)	Pack Quantity			Weight (Kg each)
					Bag	Box	Carton	
BSPC02F	½"	1.12	0.45	1.34	5	25	75	0.20

Equal Tee Female All Ends

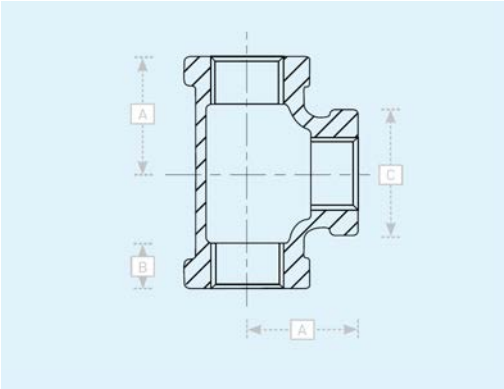

Part Number	Size	A (ins)	B (ins)	C (ins)	Pack Quantity			Weight (Kg each)
					Bag	Box	Carton	
BSPT01F	¼"	0.72	0.35	0.81	5		300	0.06
BSPT015F	⅜"	0.83	0.37	1.00	5		100	0.12
BSPT02F	½"	1.03	0.45	1.17	5		100	0.16
BSPT03F	¾"	1.19	0.52	1.47	5		75	0.24
BSPT04F	1"	1.43	0.60	1.72	5		40	0.41
BSPT05F	1 ¼"	1.71	0.67	2.10	5		35	0.63
BSPT06F	1 ½"	1.87	0.70	2.38	5		24	0.79
BSPT08F	2"	2.14	0.76	2.92	1		15	1.31

Reducing Tee Female All Ends

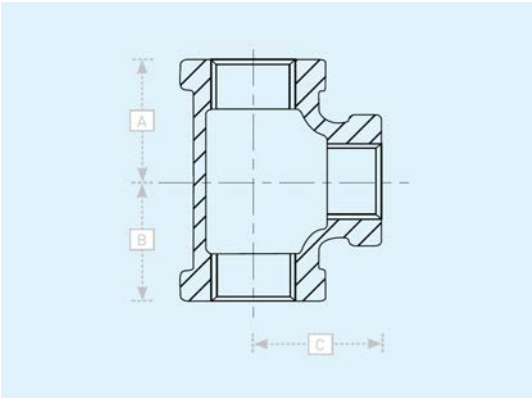

Part Number	Size (inlet x outlet x branch)	A (ins)	B (ins)	C (ins)	Pack Quantity			Weight (Kg each)
					Bag	Box	Carton	
BSPT030302F	¾" x ¾" x ½"	1.08	1.08	1.11	5	25		0.21
BSPT040402F	1" x 1" x ½"	1.20	1.20	1.24	5	10		0.31
BSPT040403F	1" x 1" x ¾"	1.30	1.30	1.31	5	10		0.33
BSPT060603F	1 ½" x 1 ½" x ¾"	1.42	1.42	1.60	5			0.62
BSPT101004F	2 ½" x 2 ½" x 1"	2.16	2.16	2.51	1			1.50
BSPT161610F	4" x 4" x 2 ½"	3.30	3.30	3.60	1			4.41
BSPT040504F	1" x 1 ¼" x 1"	1.67	1.67	1.67	5			0.49
BSPT050205F	1 ¼" x ½" x 1 ¼"	1.69	1.40	1.69	5			0.55
BSPT050302F	1 ¼" x ¾" x ½"	1.45	1.31	1.62	5			0.37
BSPT050304F	1 ¼" x ¾" x 1"	1.58	1.45	1.50	5			0.50
BSPT060505F	1 ½" x 1 ¼" x 1 ¼"	1.82	1.82	1.88	5			0.84
BSPT060506F	1 ½" x 1 ¼" x 1 ½"	1.94	1.88	1.94	5			0.79
BSPT080208F	2" x ½" x 2"	2.25	1.88	2.25	1			1.04
BSPT080308F	2" x ¾" x 2"	2.25	1.97	2.25	1			1.13

Equal Socket Female x Female

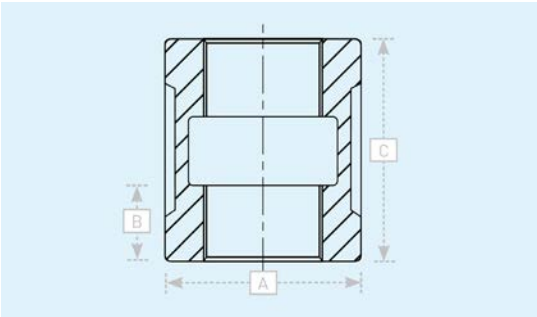

Part Number	Size	A (ins)	B (ins)	C (ins)	Pack Quantity			Weight (Kg each)
					Bag	Box	Carton	
BSPS01F	¼"	0.81	0.32	0.97	5	25	600	0.03
BSPS02F	½"	1.17	0.43	1.29	5	25	200	0.09
BSPS03F	¾"	1.42	0.50	1.43	5	25	100	0.13
BSPS04F	1"	1.72	0.58	1.68	5	25	100	0.21
BSPS05F	1 ¼"	2.10	0.67	1.86	5	25	75	0.33
BSPS06F	1 ½"	2.38	0.70	1.92	51		50	0.44
BSPS08F	2"	2.92	0.75	2.20			30	0.67

Reducing Socket Female x Female

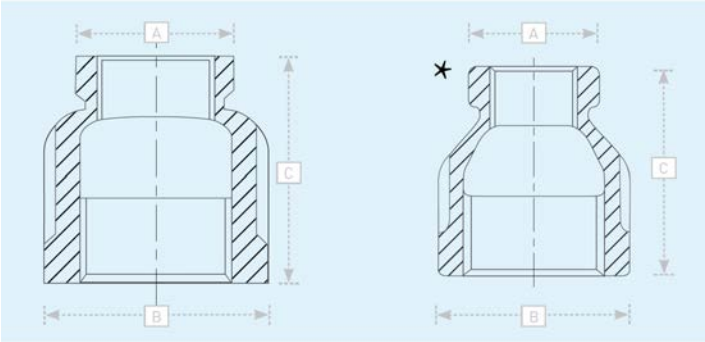

Part Number	Size	A (ins)	B (ins)	C (ins)	Pack Quantity			Weight (Kg each)
					Bag	Box	Carton	
BSPS01501F	⅜" x ¼"	0.81	1.00	0.92	5	25	150	0.05
BSPS02015F	½" x ⅜"	1.00	1.17	1.17	5	25	200	0.07
BSPS0302F	¾" x ½"	1.17	1.42	1.35	5	25	175	0.13
BSPS0401F	1" x ¼"	0.81	1.72	1.56	5	25	50	0.17
BSPS0402F	1" x ½"	1.17	1.72	1.56	5	25	75	0.17
BSPS0403F	1" x ¾"	1.42	1.72	1.56	5	25	100	0.18
BSPS0503F	1 ¼" x ¾"	1.42	2.10	1.77	5		90	0.26
BSPS0504F	1 ¼" x 1"	1.72	2.10	1.77	5		70	0.28
BSPS0603F	1 ½" x ¾"	1.42	2.38	1.80	5		50	0.33
BSPS0604F	1 ½" x 1"	1.72	2.38	1.80	5		70	0.34
BSPS0605F	1 ½" x 1 ¼"	2.10	2.38	1.80	5		50	0.38
BSPS0802F	2" x ½"	1.17	2.92	2.03	1		25	0.53
BSPS0804F	2" x 1"	1.72	2.92	2.03	1		25	0.52
BSPS0805F	2" x 1 ¼"	2.10	2.92	2.03	1		25	0.52
BSPS0806F	2" x 1 ½"	2.38	2.92	2.3	1		43	0.57

Straight Union (Flat Joint) Female x Female

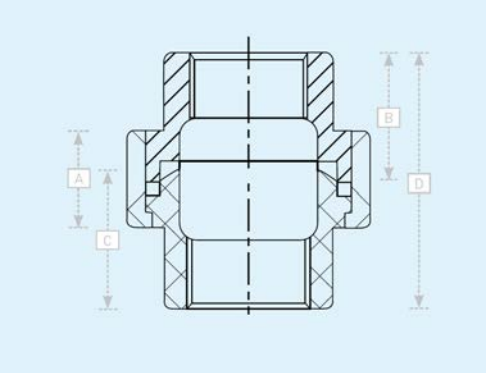

Part Number	Size	A (ins)	B (ins)	C (ins)	Pack Quantity			Weight (Kg each)
					Bag	Box	Carton	
BSPU01	¼"	0.53	0.68	0.78	1.26	5	100	0.11
BSPU015	⅜"	0.62	0.82	0.86	1.49	5	100	0.18
BSPU03	¾"	0.73	0.98	1.06	1.90	5	75	0.30
BSPU04	1"	0.78	1.12	1.20	2.12	5	40	0.45
BSPU05	1 ¼"	0.94	1.26	1.37	2.36	5	35	0.65
BSPU06	1 ½"	1.02	1.35	1.53	3.67	5	25	0.81
BSPU10	2 ½"	1.16	1.67	1.87	3.40	1	10	2.10

BSP Locknut

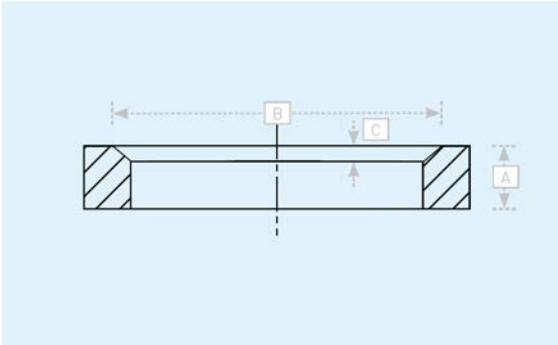

Part Number	Size	A (ins)	B (ins)	C (ins)	Pack Quantity			Weight (Kg each)
					Bag	Box	Carton	
BSPL05	1¼"	0.42	1.86	0.06	5		50	0.12
BSPL08	2"	0.53	2.63	0.09	1		50	0.28
BSPL10	2½"	0.59	3.18	0.09	1		25	0.50
BSPL12	3"	0.67	3.84	0.09	1		25	0.55
BSPL16	4"	0.80	5.00	0.13	1		25	0.81

Reducing Hexagon Bush

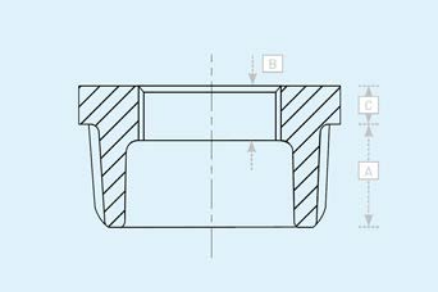

Part Number	Size	A (ins)	B (ins)	C (ins)	Pack Quantity			Weight (Kg each)
					Bag	Box	Carton	
BSPB01501	⅜" x ¼"	0.48	0.40	0.16	5	25	600	0.02
BSPB0201	½" x ¼"	0.56	0.32	0.19	5	25	450	0.04
BSPB02015	½" x ⅜"	0.56	0.41	0.19	5	25	450	0.04
BSPB0302	¾" x ½"	0.63	0.53	0.22	5	25	300	0.06
BSPB0402	1" x ½"	0.75	0.43	0.25	5	25	150	0.12
BSPB0403	1" x ¾"	0.75	0.50	0.25	5	25	150	0.10
BSPB0502	1 ¼" x ½"	0.80	0.43	0.34	5		120	0.16
BSPB0503	1 ¼" x ¾"	0.80	0.50	0.28	5		115	0.21
BSPB0504	1 ¼" x 1"	0.80	0.58	0.28	5		120	0.15
BSPB0602	1 ½" x ½"	0.83	0.43	0.37	5		105	0.23
BSPB0603	1 ½" x ¾"	0.83	0.50	0.37	5		105	0.23
BSPB0604	1 ½" x 1"	0.83	0.58	0.31	5		90	0.27
BSPB0605	1 ½" x 1 ¼"	0.83	0.71	0.31	5		100	0.19
BSPB08015	2" x ⅜"	0.88	0.36	0.30	1		25	0.43
BSPB0802	2" x ½"	0.88	0.43	0.41	1		83	0.30
BSPB0803	2" x ¾"	0.88	0.50	0.41	1		76	0.33
BSPB0804	2" x 1"	0.88	0.58	0.41	1		67	0.37
BSPB0805	2" x 1 ¼"	0.88	0.67	0.34	1		59	0.42
BSPB0806	2" x 1 ½"	0.88	0.70	0.34	1		78	0.32
BSPB1002	2 ½" x ½"	1.07	0.43	0.41	1		25	0.49
BSPB1003	2 ½" x ¾"	1.07	0.50	0.41	1		25	0.50

Equal Hexagon Nipple

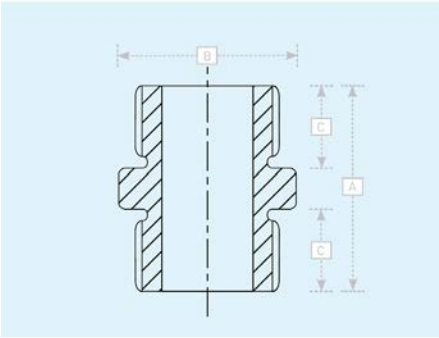

Part Number	Size	A (ins)	B (ins)	C (ins)	Pack Quantity			Weight (Kg each)
					Bag	Box	Carton	
BSPN01	¼"	1.34	0.67	0.47	5	25	350	0.03
BSPN015	⅜"	1.42	0.83	0.51	5	25	175	0.05
BSPN02	½"	1.77	1.06	0.73	5	25	200	0.08
BSPN03	¾"	1.89	1.26	0.77	5	25	100	0.13
BSPN04	1"	2.09	1.50	0.85	5	25	80	0.20
BSPN05	1 ¼"	2.21	1.89	0.91	5		35	0.28
BSPN06	1 ½"	2.36	2.17	0.95	5		25	0.35
BSPN08	2"	2.76	2.76	1.10	1		10	0.52

Plain Plug Male

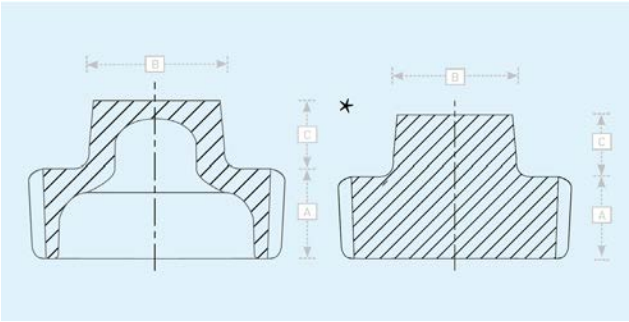

Part Number	Size	A (ins)	B (ins)	C (ins)	Pack Quantity			Weight (Kg each)
					Bag	Box	Carton	
BSPP015M	*⅜"	0.41	0.43	0.31	5	25	325	0.03
BSPP02M	½"	0.54	0.56	0.38	5	25	500	0.05
BSPP03M	¾"	0.55	0.62	0.44	5	25	300	0.07
BSPP04M	1"	0.69	0.81	0.50	5	25	200	0.12
BSPP05M	1 ¼"	0.71	0.93	0.56	5		140	0.17
BSPP06M	1 ½"	0.73	1.12	0.62	5		95	0.26
BSPP08M	2"	0.76	1.31	0.68	1		50	0.34
BSPP10M	2 ½"	1.07	1.50	0.74	1		25	0.60

Reducing Hexagon Nipple

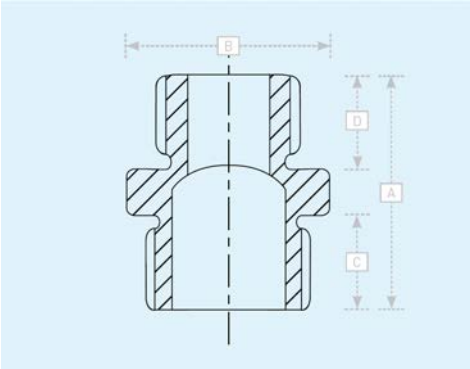

Part Number	Size	A (ins)	B (ins)	C (ins)	D (ins)	Pack Quantity			Weight (Kg each)
						Bag	Box	Carton	
BSPN0302	¾" x ½"	1.85	1.18	0.81	0.69	5	25	100	0.12
BSPN0403	1" x ¾"	2.09	1.42	0.89	0.81	5		150	0.15
BSPN0504	1 ¼" x 1"	2.24	1.81	0.98	0.87	5		50	0.29
BSPN0603	1 ½" x ¾"	2.32	1.97	1.02	0.83	5		50	0.42
BSPN0604	1 ½" x 1"	2.32	1.97	0.98	0.87	5		50	0.31
BSPN0802	2" x ½"	2.68	2.56	1.30	0.83	1		25	0.46
BSPN0803	2" x ¾"	2.68	2.56	1.26	0.87	1		25	0.46

Solid Plain Plug Male

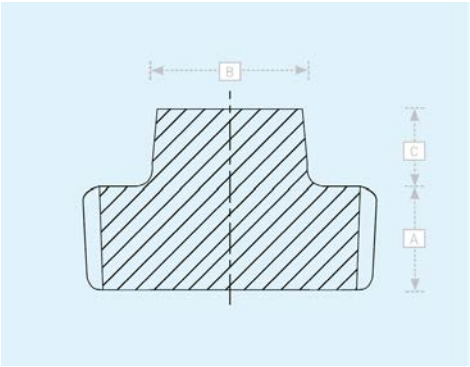

Part Number	Size	A (ins)	B (ins)	C (ins)	D (ins)	Pack Quantity			Weight (Kg each)
						Bag	Box	Carton	
BSPSP04M	1"	0.69	0.81	0.50	5			50	0.17

Blank Cap

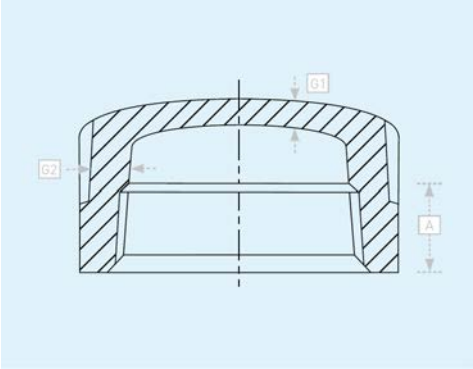

Part Number	Size	A (ins)	G1 (ins)	G2 (ins)	Pack Quantity			Weight (Kg each)
					Bag	Box	Carton	
BSPCA015	⅜"	0.36	0.09	0.11	5	25	100	0.04
BSPCA04	1"	0.58	0.11	0.15	5	25	150	0.15
BSPCA05	1 ¼"	0.67	0.12	0.17	5		75	0.25
BSPCA08	2"	0.75	0.15	0.22	1		46	0.53

EBCO Meter Valves

EBCO meter valves are made from corrosion resistant gunmetal with either ½" or ¾" valves and are available in ½" to 1" size range with male/female BSP threaded connections, 25mm EBCO Push-Fit connections for PE pipe and copper connections from 15mm to 22mm.

A 1" base spherical meter valve is available on request.

EBCO Meter Housings

EBCO gunmetal meter housings are corrosion resistant and available in the following sizes: ¾" to 1¼" male and 1" female BSP threaded connections and 15mm copper connections.

Working Pressure:	Up to 16 bar	
Temperature *:	Up to 40°C	
Materials:	Manifold body and components:	Gunmetal BS EN 1982:2008 CC491K (formerly BS1400 LG2)
	Blanking plugs:	Plastic (Acetal) or Gunmetal
	O rings:	Nitrile or EPDM rubber
	Washers:	Nitrile or EPDM rubber
	Gland packing:	Graphite aramid fibre and rubber compound
	Ball seals:	Moulded or EPDM rubber

* Temperature increases may affect the installed life of the product. For further information relating to operating temperatures and pressure please contact our Customer Service department on the telephone number shown below.
Please note that meters are not supplied as standard with the EBCO Manifold System.

Benefits

- Staggered meter mounts means that the unit is compact enough to fit an 18" by 24" meter chamber
- 1½ " female inlet and ¾" male, ¾" or 1" female or 25mm PE outlets (1" female inlet on 2 port manifold) allow most types of pipe material to be connected
- Each outlet has its own shut-off valve which is available with either screwdown or ¼ turn valve operation
- Each unit is supplied individually boxed for quick and easy on-site assembly
- Made from gunmetal throughout the unit is robust and corrosion resistant in even the most aggressive ground conditions

Safety

As with all industrial products it is important to take adequate safety precautions such as the use of adequate protective clothing like gloves, overalls, eye protection and safety footwear during installation and maintenance of this product.

Technical Help:

For further technical data, product specifications and general information please contact Customer Service on:
+44 (0)845 077 9797

EBCO - 2 Port Manifold

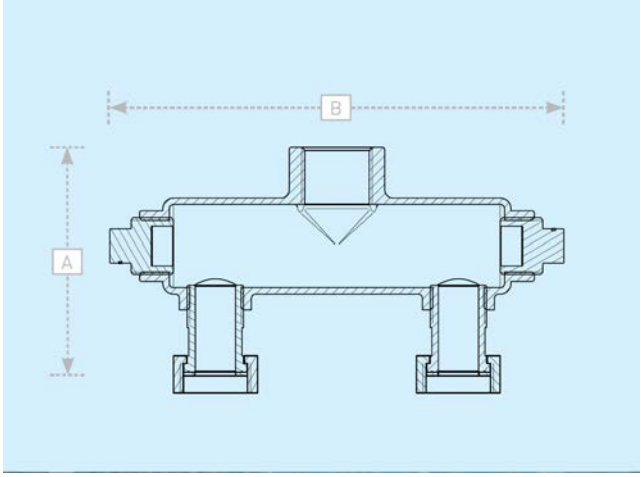

Manifold (Without Meter Valve)

Part Number	Inlet x 1	Outlet x 2	Valve Size	Head Works	Blanking Plug	A (mm)	B (mm)	Pack Quantity			Weight (Kg each)
								Bag	Box	Carton	
MANI22	1" Female	1" Female Swivel				108	214				1.34

Talbot Modular Manifold Systems

Manifolds with more than 12 ports are available.
Please contact us for details.

Manifold - PE Inlet, Concentric Type Meter Connections and PE outlets

Code	Size	Bag Quantity	Weight (Kg each)
E3707	2 port, 25mm PE outlet x 50mm PE inlet	1	
E3708	3 port, 25mm PE outlet x 50mm PE inlet	1	
E3709	4 port, 25mm PE outlet x 50mm PE inlet	1	
E3710	5 port, 25mm PE outlet x 50mm PE inlet	1	
E3711	6 port, 25mm PE outlet x 50mm PE inlet	1	
E3712	7 port, 25mm PE outlet x 50mm PE inlet	1	
E3713	8 port, 25mm PE outlet x 50mm PE inlet	1	
E3714	9 port, 25mm PE outlet x 50mm PE inlet	1	
E3715	10 port, 25mm PE outlet x 50mm PE inlet	1	
E3716	11 port, 25mm PE outlet x 50mm PE inlet	1	
E3717	12 port, 25mm PE outlet x 50mm PE inlet	1	
E3718	2 port, 25mm PE outlet x 63mm PE inlet	1	
E3719	3 port, 25mm PE outlet x 63mm PE inlet	1	
E3720	4 port, 25mm PE outlet x 63mm PE inlet	1	
E3721	5 port, 25mm PE outlet x 63mm PE inlet	1	
E3722	6 port, 25mm PE outlet x 63mm PE inlet	1	
E3723	7 port, 25mm PE outlet x 63mm PE inlet	1	
E3724	8 port, 25mm PE outlet x 63mm PE inlet	1	
E3725	9 port, 25mm PE outlet x 63mm PE inlet	1	
E3726	10 port, 25mm PE outlet x 63mm PE inlet	1	
E3727	11 port, 25mm PE outlet x 63mm PE inlet	1	
E3728	12 port, 25mm PE outlet x 63mm PE inlet	1	

Manifolds with more than 12 ports are available.
Please contact us for details.

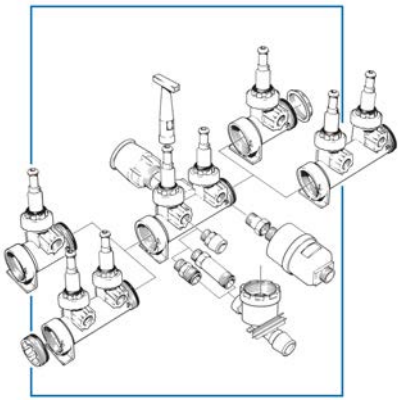

Manifold - PE Inlet, Concentric Type Meter Connections and PE outlets

Code	Size	Bag Quantity	Weight (Kg each)
E3751	2 port, 25mm PE outlet x 50mm PE inlet	1	
E3752	3 port, 25mm PE outlet x 50mm PE inlet	1	
E3753	4 port, 25mm PE outlet x 50mm PE inlet	1	
E3754	5 port, 25mm PE outlet x 50mm PE inlet	1	
E3755	6 port, 25mm PE outlet x 50mm PE inlet	1	
E3756	7 port, 25mm PE outlet x 50mm PE inlet	1	
E3757	8 port, 25mm PE outlet x 50mm PE inlet	1	
E3758	9 port, 25mm PE outlet x 50mm PE inlet	1	
E3759	10 port, 25mm PE outlet x 50mm PE inlet	1	
E3760	11 port, 25mm PE outlet x 50mm PE inlet	1	
E3761	12 port, 25mm PE outlet x 50mm PE inlet	1	
E3762	2 port, 25mm PE outlet x 63mm PE inlet	1	
E3763	3 port, 25mm PE outlet x 63mm PE inlet	1	
E3764	4 port, 25mm PE outlet x 63mm PE inlet	1	
E3765	5 port, 25mm PE outlet x 63mm PE inlet	1	
E3766	6 port, 25mm PE outlet x 63mm PE inlet	1	
E3767	7 port, 25mm PE outlet x 63mm PE inlet	1	
E3768	8 port, 25mm PE outlet x 63mm PE inlet	1	
E3769	9 port, 25mm PE outlet x 63mm PE inlet	1	
E3770	10 port, 25mm PE outlet x 63mm PE inlet	1	
E3771	11 port, 25mm PE outlet x 63mm PE inlet	1	
E3772	12 port, 25mm PE outlet x 63mm PE inlet	1	

EBCO - 4 Port Manifold

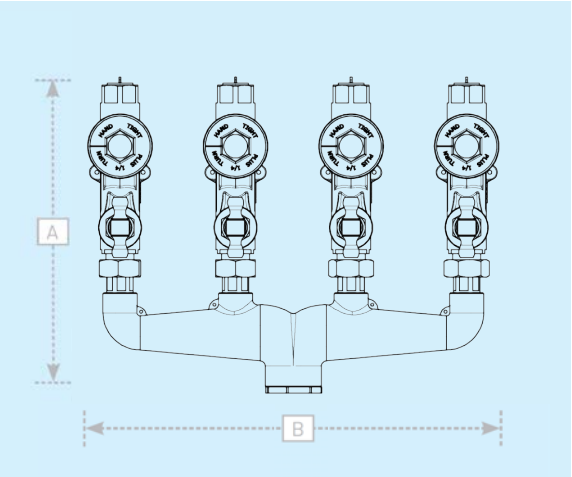

Manifold (Without Meter Valve)

Part Number	Inlet x 1	Outlet x 4	Valve Size	Head Works	Blanking Plug	A (mm)	B (mm)	Pack Quantity			Weight (Kg each)
								Bag	Box	Carton	
MANI4	1 ½" Female	¾" Female				94	380				1.74
MANI43	1 ½" Female	¾" Female Swivel				135	390				2.41
MANI44	1 ½" Female	1" Female Swivel				126	390				2.53

Manifold (Kit Form)

Part Number	Inlet x 1	Outlet x 4	Valve Size	Head Works	Blanking Plug	A (mm)	B (mm)	Pack Quantity			Weight (Kg each)
								Bag	Box	Carton	
MANI401	1 ½" Female	¾" Male	½"	Crutch Head	Dust Cap	312	408				6.79
MANI402	1 ½" Female	¾" Male	½"	Crutch Head	Full Flow	312	408				6.97
MANI403	1 ½" Female	¾" Male	½"	Crutch Head	Trickle Flow	312	408				7.02
MANI410	1 ½" Female	¾" Female	¾"	Crutch Head	Dust Cap	301	408				9.15
MANI411	1 ½" Female	¾" Female	¾"	Crutch Head	Full Flow	301	408				9.37
MANI451	1 ½" Female	¾" Female	¾"	¼" Turn	Full Flow	367	408				8.85
MANI451s	1 ½" Female	¾" Female	¾"	¼" Turn	Full Flow	290	408				7.19

Manifold (Assembled)

Part Number	Inlet x 1	Outlet x 4	Valve Size	Head Works	Blanking Plug	A (mm)	B (mm)	Pack Quantity			Weight (Kg each)
								Bag	Box	Carton	
MANI420	1 ½" Female	¾" Female	¾"	Crutch Head	Full Flow	301	408				9.33
MANI452	1 ½" Female	¾" Female	¾"	¼" Turn	Full Flow	367	408				8.85

EBCO - 6 Port Manifold

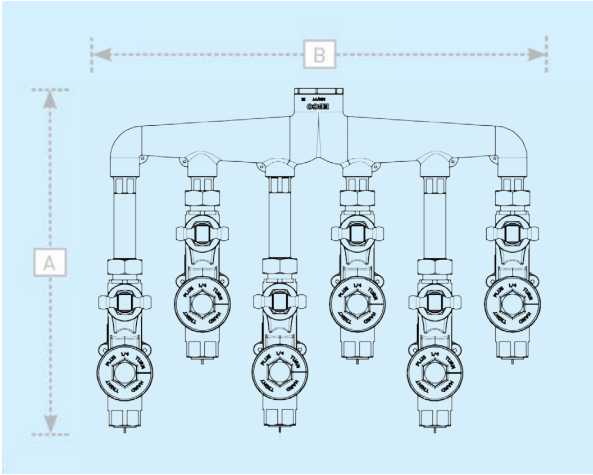

Manifold (Without Meter Valve)

Part Number	Inlet x 1	Outlet x 6	Valve Size	Head Works	Blanking Plug	A (mm)	B (mm)	Pack Quantity			Weight (Kg each)
								Bag	Box	Carton	
MANI6	1 ½" Female	¾" Female				96	480				2.22
MANI63	1 ½" Female	¾" Female Swivel				220	480				3.52
MANI64	1 ½" Female	1" Female Swivel				210	480				3.83

Manifold (Kit Form)

Part Number	Inlet x 1	Outlet x 6	Valve Size	Head Works	Blanking Plug	A (mm)	B (mm)	Pack Quantity			Weight (Kg each)
								Bag	Box	Carton	
MANI601	1 ½" Female	¾" Male	½"	Crutch Head	Dust Cap	382	510				10.09
MANI602	1 ½" Female	¾" Male	½"	Crutch Head	Full Flow	382	510				10.37
MANI603	1 ½" Female	¾" Male	½"	Crutch Head	Trickle Flow	382	510				10.44
MANI610	1 ½" Female	¾" Female	¾"	Crutch Head	Dust Cap	382	510				13.95
MANI611	1 ½" Female	¾" Female	¾"	Crutch Head	Full Flow	382	510				14.01
MANI651	1 ½" Female	¾" Female	¾"	¼" Turn	Full Flow	448	510				13.31

EBCO - ½" Base Meter Valve

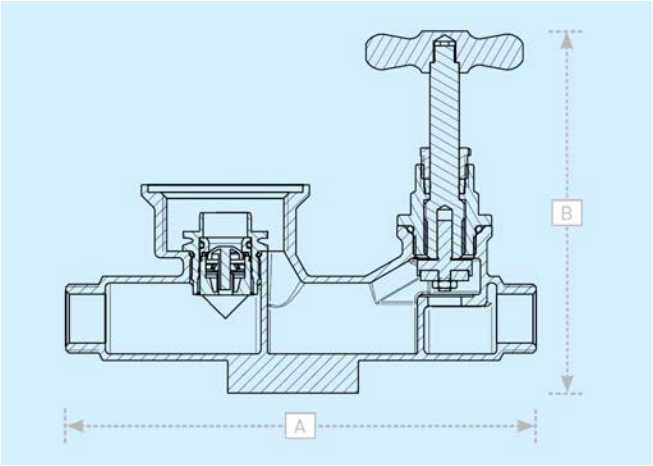

Part Number	Inlet	Outlet	Head Works	Blanking Plug	A (mm)	B (mm)	Pack Quantity			Weight (Kg each)
							Bag	Box	Carton	
MVB0010	½" Female	½" Female	Crutch Head	Full Flow	180	139				1.24
MVB0020	¾" Male	¾" Male	Crutch Head	Dust Cap	180	139		8		1.14
MVB0030	¾" Male	¾" Male	Crutch Head	Full Flow	180	139		8		1.18
MVB0040	¾" Male	¾" Male	Crutch Head	No Flow	180	139		8		1.19
MVB0045	¾" Male	¾" Male	Crutch Head	Trickle Flow	180	139		8		1.19
MVB0100	½" Female	½" Female	½" Square Head	Dust Cap	180	139				1.18
MVB0110	½" Female	½" Female	½" Square Head	Full Flow	180	139				1.22
MVB0120	¾" Male	¾" Male	½" Square Head	Dust Cap	180	139				1.12
MVB0130	¾" Male	¾" Male	½" Square Head	Full Flow	180	139				1.16

EBCO - ¾" Base Meter Valve

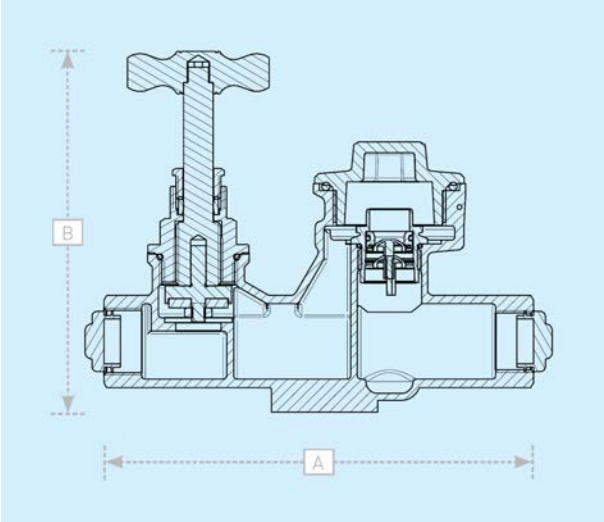

Part Number	Inlet	Outlet	Head Works	Blanking Plug	A (mm)	B (mm)	Pack Quantity			Weight (Kg each)
							Bag	Box	Carton	
MVB0140	25mm BPF	25mm BPF	Crutch Head	Dust Cap	182	153				
MVB0200	¾" Female	¾" Female	Crutch Head	Dust Cap	182	153		6		1.66
MVB0210	¾" Female	¾" Female	Crutch Head	Full Flow	182	153		8		1.70
MVB0240	1" Male	¾" Female	Crutch Head	Dust Cap	182	153				1.62
MVB0250	1" Male	¾" Female	Crutch Head	Full Flow	182	153		8		1.66
MVB0255	1" Male	¾" Female	Crutch Head	Trickle Flow	182	153				1.67
MVB0220	1" Male	1" Male	Crutch Head	Dust Cap	182	153				
MVB0230	1" Male	1" Male	Crutch Head	Full Flow	182	153				1.62
MVB0241	1" Male	¾" Female	½" Square Head	Dust Cap	182	153				1.58

Dual Non Return Valve

Part Number	Inlet	Outlet	Head Works	Blanking Plug	A (mm)	B (mm)	Pack Quantity			Weight (Kg each)
							Bag	Box	Carton	
MVB0211	¾" Female	¾" Female	Crutch Head	Full Flow	182	153				1.78

EBCO - ¾" Base Spherical Meter Valve

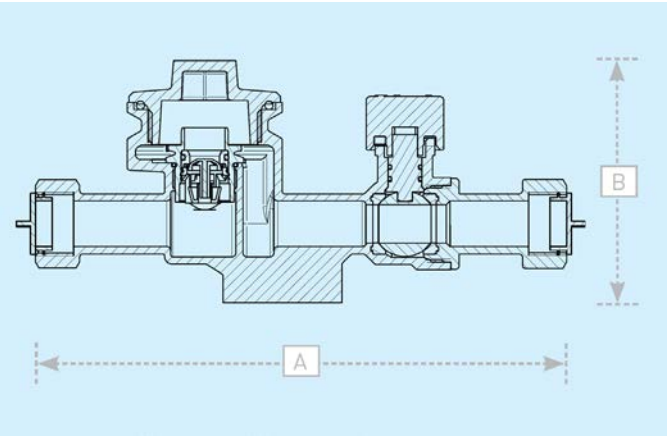

Part Number	Inlet	Outlet	Head Works	Blanking Plug	A (mm)	B (mm)	Pack Quantity			Weight (Kg each)
							Bag	Box	Carton	
MVS0110	¾" Female	¾" Female	¼" Turn	Full Flow	223	102				1.38
MVB0420	¾" Female	15mm Copper	¼" Turn	Full Flow	287	102				1.59

A 1" Base Spherical Meter Valve is available on request

EBCO - ¾" Raised Meter Valve

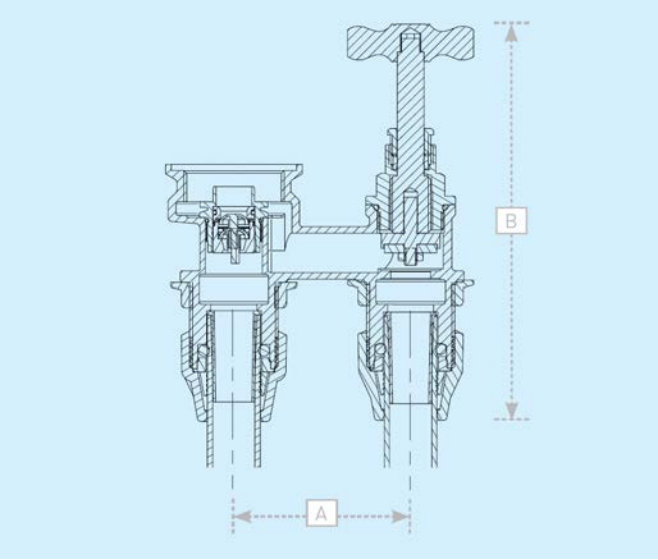

Part Number	Inlet	Outlet	Head Works	Blanking Plug	A (mm)	B (mm)	Pack Quantity			Weight (Kg each)
							Bag	Box	Carton	
MVR0001	25mm BPF	25mm BPF	Crutch Head	Dust Cap	84	189		4		1.66
MVR0020	25mm BPF	25mm BPF	Crutch Head	Full Flow	84	189		4		1.70
MVR0040	25mm BPF Tail	25mm BPF Tail	Crutch Head	Dust Cap	84	189		4		1.83

EBCO - Spherical In-Line Meter Valve

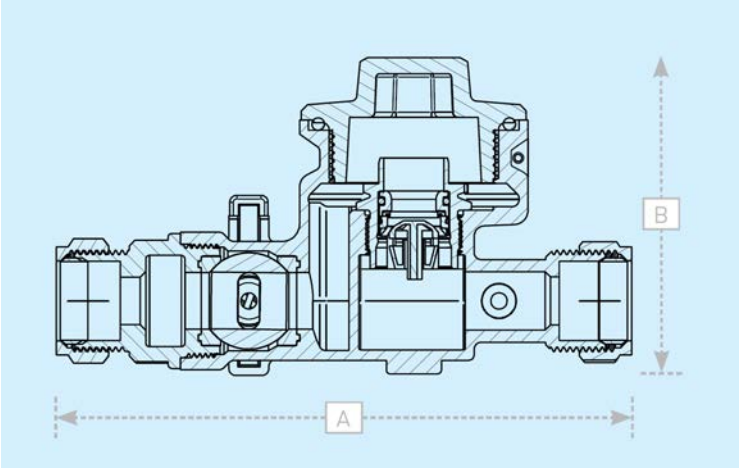

Part Number	Inlet	Outlet	Head Works	Blanking Plug	A (mm)	B (mm)	Pack Quantity			Weight (Kg each)
							Bag	Box	Carton	
MVS2515L	25mm BSP	15mm Copper	¼" Turn LHS	Full Flow	185	89				1.08
MVS2522L	25mm BSP	22mm Copper	¼" Turn LHS	Full Flow	185	89				1.10
MVS1515L	15mm Copper	15mm Copper	¼" Turn LHS	Full Flow	162	89				1.07
MVS2215L	22mm Copper	15mm Copper	¼" Turn LHS	Full Flow	162	89				1.08
MVS2515R	25mm BSP	15mm Copper	¼" Turn LHS	Full Flow	185	89				1.08
MVS2522R	25mm BSP	22mm Copper	¼" Turn LHS	Full Flow	185	89				1.10
MVS1515R	15mm Copper	15mm Copper	¼" Turn LHS	Full Flow	162	89				1.07
MVS2215R	22mm Copper	15mm Copper	¼" Turn LHS	Full Flow	162	89				1.08
MVS2222R	22mm Copper	22mm Copper	¼" Turn LHS	Full Flow	162	89				1.10

EBCO - Meter Housing

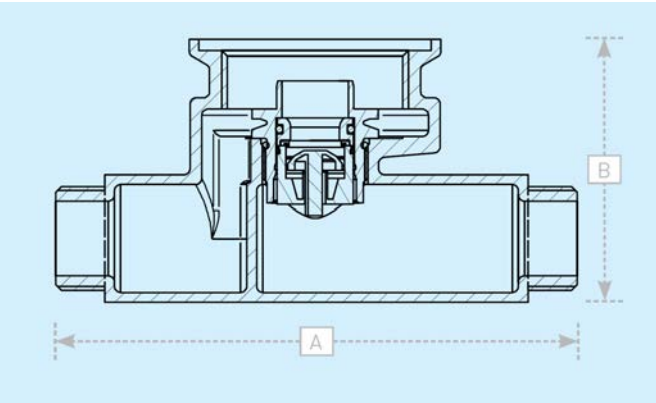

Part Number	Inlet	Outlet	Blanking Plug	A (mm)	B (mm)	Pack Quantity			Weight (Kg each)
						Bag	Box	Carton	
MVH0001	¾" Male	¾" Male	Dust Cap	133	67		12		0.62
MVH0010	1" Male	1" Male	Dust Cap	165	67		6		0.73
MVH0015	1" Female	1" Female	Dust Cap	199	86				1.36
MVH0020	1 ¼" Male	1 ¼" Male	Dust Cap	199	84		6		1.38
MVH0080	15mm Copper	15mm Copper	Dust Cap	94	55		16		0.64

Dual Non Return Valve

Part Number	Inlet	Outlet	Blanking Plug	A (mm)	B (mm)	Pack Quantity			Weight (Kg each)
						Bag	Box	Carton	
MVH0030	¾" Male	¾" Male	Dust Cap	133	90				0.79
MVH0040	1" Male	1" Male	Dust Cap	165	90				0.92

EBCO - Accessories

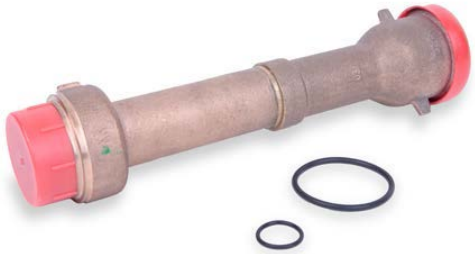

Meter Raiser

Part Number	Inlet	Outlet	Valve Size	Height (mm)	Pack Quantity			Weight (Kg each)
					Bag	Box	Carton	
MR010	1 ½" Male BSP	1 ½" Female BSP	½", ¾"	270		10		1.26

Meter Housing Adaptor

Part Number	Inlet	Outlet	Valve Size	Height (mm)	Pack Quantity			Weight (Kg each)
					Bag	Box	Carton	
MHA0806	2" Male BSP	1 ½" Female BSP	1"	49		16		0.44

EBCO - Replacement Parts

Blanking Plugs

Part Number	Plug Type	Valve Size	Seal Type	Thread Size	Pack Quantity			Weight (Kg each)
					Bag	Box	Carton	
MCP10	Acetal Full Flow (White)	½", ¾"	O ring	1 ½" BSP		50		0.04
MCP20	Acetal Trickle Flow (Yellow)	½", ¾"	O ring	1 ½" BSP		50		0.05
MCP30	Acetal No Flow (Red)	½", ¾"	O ring	1 ½" BSP		40		0.05
MCP40	Acetal Full Flow (White)	½", ¾"	Flat Washer	1 ½" BSP				0.04
MCG10	Gunmetal Full Flow	½", ¾"	O ring	1 ½" BSP		50		0.20
MCG30	Gunmetal No Flow	½", ¾"	O ring	1 ½" BSP				0.24
MCG15	Gunmetal Full Flow	1"	O ring	2" BSP		30		0.33

Meter Valve Headworks

Part Number	Inlet	Valve Size	Pack Quantity			Weight (Kg each)
			Bag	Box	Carton	
TWM5403CR	Crutch Head	¾"		21		0.42
TWM5403SH1	½" Square Head	¾"		50		0.38
TWM5403SH2	½" Square Head	¾"				0.38

Valves and Stopcocks
Technical Data

EBCO and Talbot BS5433 Stopcocks

Premium quality gunmetal stopcocks manufactured to BS5433 are highly resistant to corrosion and provide years of service in even the most aggressive soil conditions.

Gunmetal stopcocks are available in ½" to 2" size range with male/female BSP threaded connections, EBCO Push-Fit and Talbot Pushfit connections from 20mm to 63mm (½" to 2") for PE pipe and copper Type B connections from 15mm to 54mm. BS5433 stopcocks can be supplied with either crutch heads or square heads.

Sizes:	Female/Male threaded for iron pipe:	½" to 2"
	EBCO Pushfit/Talbot Pushfit for PE:	20mm (½") to 63mm (2")
	Compression for PE:	20mm (½") to 63mm (2")
	Compression for copper:	15mm to 54mm
Materials:	All metallic parts:	Gunmetal to BS EN 1982:2008 CC491K
	Heated seal 'O'ring:	Nitrile or EPDM rubber
	Washer:	Nitrile or EPDM rubber
	Gland packing:	Graphite aramid fibre and rubber compound
Working Pressure:	Up to 16 bar (240psi)	
Temperature:	Up to 40°C	

* The pressure stated above applies with water temperatures up to 20°C.

** Temperature increases may affect the installed life of the product. For further information relating to operating temperatures please contact our Customer Service department.

EBCO BS1010 Bibcocks and Stopvalves

Manufactured from gunmetal and brass to BS1010 for above ground applications, and available in ½" to 2" size range with both female and male BSP threaded connections.

Sizes:	Female/Male threaded for iron pipe:	½" to 2"
Materials:	Gunmetal to BS EN 1982:2008 CC491K and Brass	
Working Pressure:	Up to 10 bar (150psi)	

EBCO Spherical Ball Valves

Spherical ball valves are made from corrosion resistant gunmetal and offer a full flow facility with either a ¼ turn or 360° on/off control. Available in a variety of connections: ½" to 2" BSP female, 25mm and 32mm EBCO Push-Fit and 15mm to 54mm copper Type B, and are supplied with fan heads.

Sizes:	Female threaded for iron pipe:	½" to 2"
	EBCO Pushfit:	20mm to 32mm
	Compression for copper:	15mm to 54mm
Materials:	All metallic parts:	Gunmetal to BS EN 1982:2008 CC491K
	'O'rings:	EPDM rubber
	Ball seats:	Moulded EPDM rubber
Working Pressure:	Up to 20 bar (300psi)	

Talbot Talflo Valve

The Talbot Talflo Valve is a self closing water supply valve used in conjunction with community stand posts. The Talflo Valve has been developed over a considerable period of time using information received from the market place and following rigorous testing with bodies such as the Consumer Association in the UK. In the field it has undergone endurance testing in several countries including Egypt, Nigeria and Ethiopia and has been in use for many years in the most arduous of conditions.

Sizes:	Female threaded stand post connections:	½" and ¾"
Materials:	Elbow:	Galvanised malleable iron
	Retaining nut:	Stainless steel Grade A2
	Seat support washer:	Brass
	Seat washer:	Nitrile rubber
	Bush:	Acetal
	Valve shaft:	Brass
	'O' rings:	Nitrile rubber
	Body:	Mild steel, nickel plated

EBCO Sampling Taps

Sampling taps are for use in the quality testing and monitoring of water supplies.
Designed for above ground use and supplied complete with retaining chain.

Sizes:	Male threaded for iron pipe:	½"
Materials:	Brass:	Finish: Chromium plated
Working Pressure	Up to 10 bar (150psi)	

Benefits

Available in a variety of tried and tested configurations with outlet types and sizes to suit PE and threaded pipe and Type B copper tube. Stopcocks can be supplied with a variety of headworks to meet specific customer requirements. Design and selection of materials gives high strength for installation and operation, and corrosion resistance for long life.

Safety

As with all industrial products it is important to take adequate safety precautions such as the use of adequate protective clothing like gloves, overalls, eye protection and safety footwear during installation and maintenance of this product.

Technical Help:

For further technical data, product specifications and general information please contact Customer Service on:
+44 (0)845 077 9797.

EBCO BS5433
Stopcock - BSP Female/Crutch Head

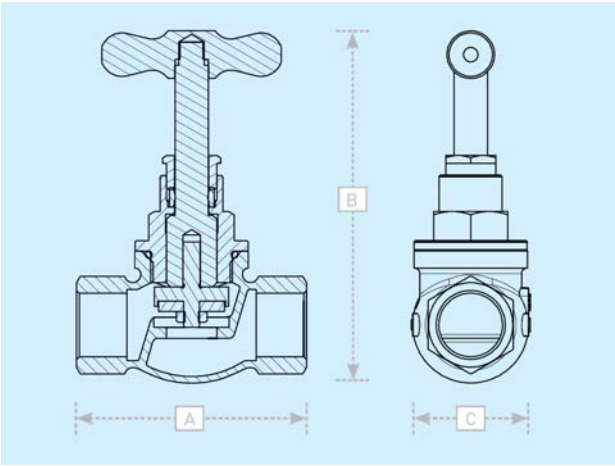

Part Number	Size (inlet/outlet)	Headworks	A (mm)	B (mm)	C (mm)	Pack Quantity			Weight (Kg each)
						Bag	Box	Carton	
SV5402FCR	½" x ½" Female	Crutch Head	79	119	39		20		0.53
SV5403FCR	¾" x ¾" Female	Crutch Head	87	133	44		12		0.83
SV5404FCR	1" x 1" Female	Crutch Head	110	170	57		6		1.60
SV5406FCR	1 ½" x 1 ½" Female	Crutch Head	142	223	74		3		3.36
SV5408FCR	2" x 2" Female	Crutch Head	162	256	97		2		5.76

EBCO BS5433
Stopcock - BSP Female/Square Head

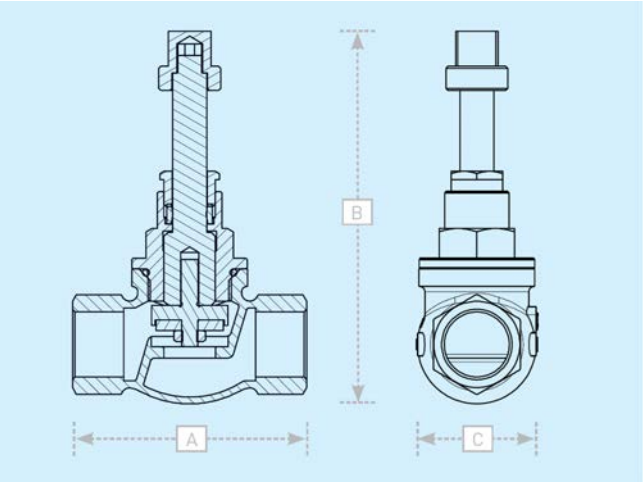

Part Number	Size (inlet/outlet)	Headworks	A (mm)	B (mm)	C (mm)	Pack Quantity			Weight (Kg each)
						Bag	Box	Carton	
SV5403FS2	¾" x ¾" Female	⅝" Square Head	87	138	44				0.78
SV5406FS2	1 ½" x 1 ½" Female	⅝" Square Spindle	142	216	74				3.04
SV5408FS2	2" x 2" Female	⅝" Square Spindle	162	250	97		2		5.28

EBCO BS5433
Stopcock - BSP Male/Crutch Head

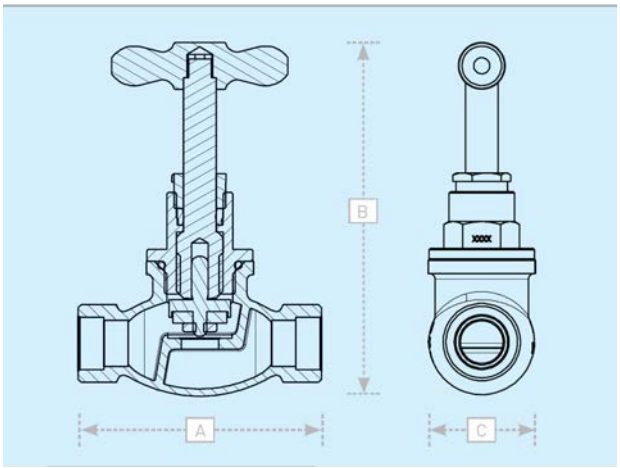

Part Number	Size (inlet/outlet)	Headworks	A (mm)	B (mm)	C (mm)	Pack Quantity			Weight (Kg each)
						Bag	Box	Carton	
SV5402MCR	½" x ½" Male	Crutch Head	117	117	36				0.69

EBCO BS5433
Stopcock - Pushfit/Crutch Head

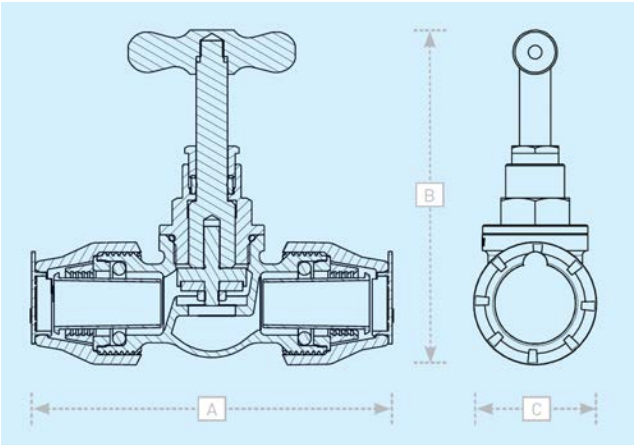

Part Number	Size (inlet/outlet)	Headworks	A (mm)	B (mm)	C (mm)	Pack Quantity			Weight (Kg each)
						Bag	Box	Carton	
SV5420ZCR	20mm x 20mm BPF	Crutch Head	126	121	41		15		0.58
SV5425ZCR	25mm x 25mm BPF	Crutch Head	148	136	50		12		0.94
SV5432ZCR	32mm x 32mm BPF	Crutch Head	175	169	58		8		1.67
SV5450ZCR	50mm x 50mm BPF	Crutch Head	355	228	84		2		3.96
SV5463ZCR	63mm x 63mm BPF	Crutch Head	400	260	105				6.70

EBCO BS5433
Stopcock - Pushfit/Square Head

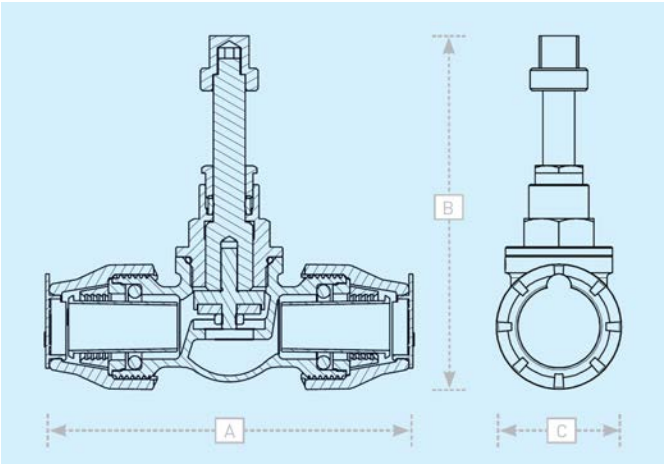

Part Number	Size (inlet/outlet)	Headworks	A (mm)	B (mm)	C (mm)	Pack Quantity			Weight (Kg each)
						Bag	Box	Carton	
SV5425ZS2	25mm x 25mm BPF	5/8" Square Spindle	148	141	50		12		0.88
SV5432ZS2	32mm x 32mm BPF	5/8" Square Spindle	175	182	58		8		1.52
SV5450ZS2	50mm x 50mm BPF	5/8" Square Spindle	352	217	85		2		3.62
SV5463ZS2	63mm x 63mm BPF	5/8" Square Spindle	400	250	105				6.22

EBCO BS5433
Stopcock - EBCO-B Compression Fitting (Metric MDPE)

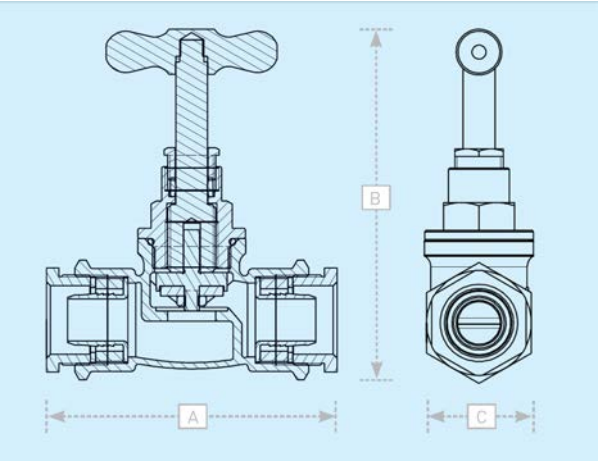

Part Number	Size (inlet/outlet)	Headworks	A (mm)	B (mm)	C (mm)	Pack Quantity			Weight (Kg each)
						Bag	Box	Carton	
SV5420BCR	20mm x 20mm EBCO-B	Crutch Head	91	120	37				0.62
SV5450BCR	50mm x 50mm EBCO-B	Crutch Head	190	223	76		3		4.40
SV5463BCR	63mm x 63mm EBCO-B	Crutch Head	213	256	91		2		6.99

EBCO BS5433 Stopcock - EBCO-S Compression Fitting (Type B Copper Tube)

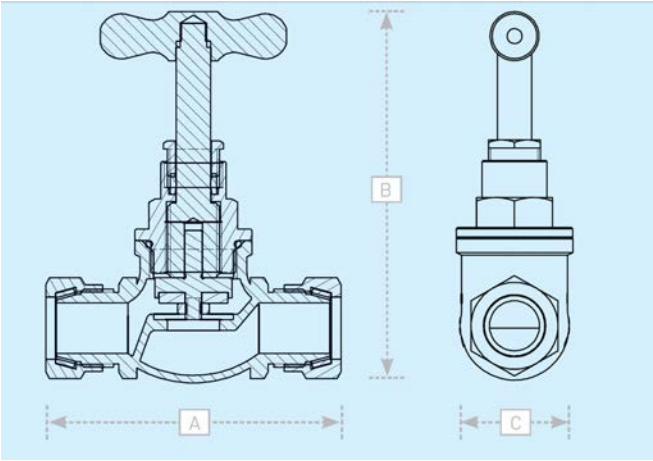

Part Number	Size (inlet/outlet)	Headworks	A (mm)	B (mm)	C (mm)	Pack Quantity			Weight (Kg each)
						Bag	Box	Carton	
SV5422CR	22mm x 22mm	Crutch Head	108	136	43		12		0.90
SV5428CR	28mm x 28mm	Crutch Head	130	166	56		6		1.70
SV5454SCR	54mm x 54mm	Crutch Head	255	267	94				7.72

TALBOT BS5433 Stopcock - Talbot Pushfit/Crutch Head

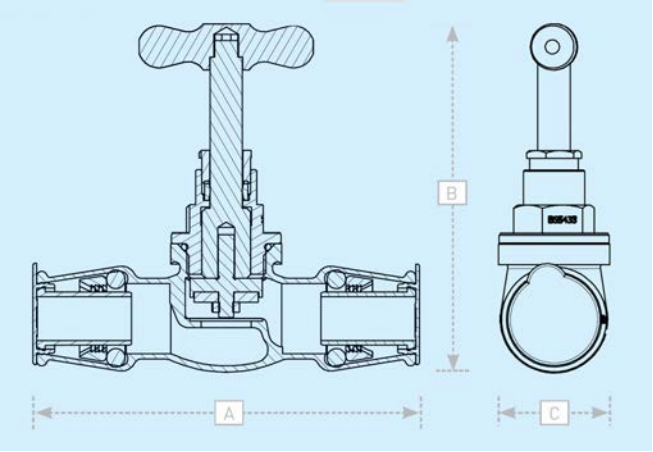

Part Number	Size (inlet/outlet)	Headworks	A (mm)	B (mm)	C (mm)	Pack Quantity			Weight (Kg each)
						Bag	Box	Carton	
E2988*	20mm x 20mm PF	Crutch Head	122	118	38		15		0.64
E2993*	25mm x 25mm PF	Crutch Head	148	136	42		12		0.94
E2996*	32mm x 32mm PF	Crutch Head	176	171	55		8		1.69
E2998*	50mm x 50mm PF	Crutch Head	258	225	73		3		4.01
E3000*	63mm x 63mm PF	Crutch Head	297	261	94		2		6.90
E2982	½" x ½"PF	Crutch Head	122	118	38				0.64
E2983	¾" x ¾" PF	Crutch Head	148	136	42				0.93

** Includes pipe liner for metric PE pipe*

TALBOT BS5433
Stopcock - Talbot Pushfit/SquareHead

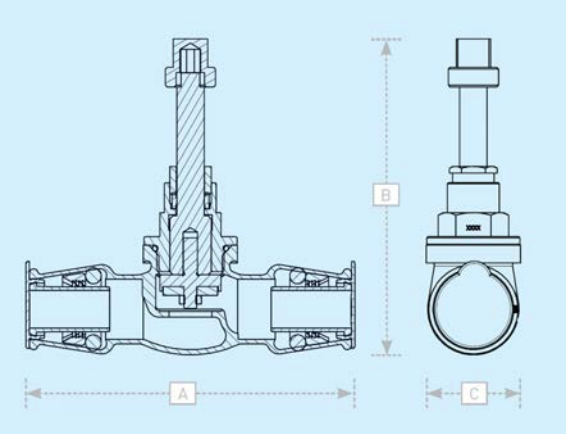

Part Number	Size (inlet/outlet)	Headworks	A (mm)	B (mm)	C (mm)	Pack Quantity			Weight (Kg each)
						Bag	Box	Carton	
E2990*	20mm x 20mm PF	⅝" Square Head	122	125	38		15		0.62
E2995*	25mm x 25mm PF	⅝" Square Head	148	145	42		10		0.90
E2997*	32mm x 32mm PF	⅝" Square Head	176	188	55		8		1.80

** Includes pipe liner for metric PE pipe*

Stopcock Chamber Systems

Stopcock Chamber Systems

Code	Description	Bag Quantity	Weight
E3199	Stopcock Chamber System, Standard. Small base, water box 700mm tube	1	
E7226	Stopcock Chamber System, large base, water box 700mm tube	1	
E7057	Stopcock Chamber System, large base, gas box (yellow) 700mm tube	1	
	Description		
1202A	Surface Box - Water (Black)	1	
1203A	Surface Box - Gas (Black)	1	
1206A	Surface Water Box (Yellow)	1	
1208	Stopcock Chamber guard tube - 6" x 700mm PVC	1	
1209	Stopcock Chamber base, small (6")	1	
1210	Stopcock Chamber Universal Top Adaptor	1	
1211	Stopcock Chamber base, large (6")	1	

TALBOT Plastic Stopcocks

The Talbot Plastic Stopcock's design is based on proven technology and can be used in all situations normally suited to a BS 5433 stopcock.

Benefits

- Torque overload protection.
  A purpose designed key provides effective protection against damage caused by over-tightening.
- Tried and Tested Technology
  The PE stopcock uses the reliable and easy to use Talbot Pushfit connection combined with existing traditional screw-down headworks technology.
- Tough and Robust
  Design and selection of materials gives high strength for installation and operation, and corrosion resistance for long life.

Stopcocks - Plastic WIS 4-23-04

Code		Size	Bag Quantity	Weight
Metric	Imperial			
E5252	E6536	20mm x (½")	5	
E5874	E6535	25mm x (¾")	5	
E5882	E6534	32mm x (1")	5	

EBCO BS1010 Bib Tap

Part Number	Size (inlet)	Headworks	A (mm)	B (mm)	C (mm)	Pack Quantity			Weight (Kg each)
						Bag	Box	Carton	
BIB02	½" Male	Crutch Head	60	110	30				0.27

EBCO BS1010
Bibcock

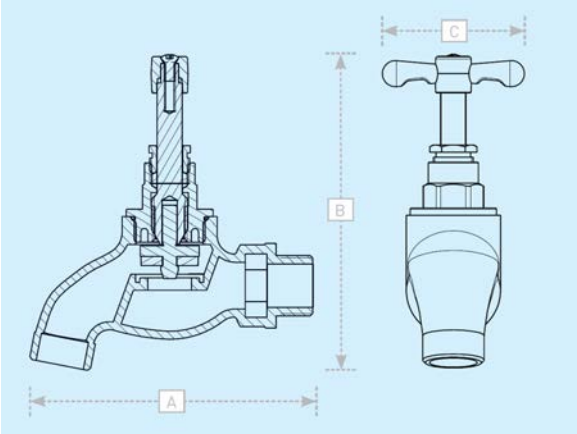

Part Number	Size (inlet)	Headworks	A (mm)	B (mm)	C (mm)	Pack Quantity			Weight (Kg each)
						Bag	Box	Carton	
BIB53PRC02	½" Male	Crutch Head	100	116	33				0.41
BIB53PRC03	¾" Male	Crutch Head	110	145	40				0.72

EBCO BS1010
Hose Union Bibcock

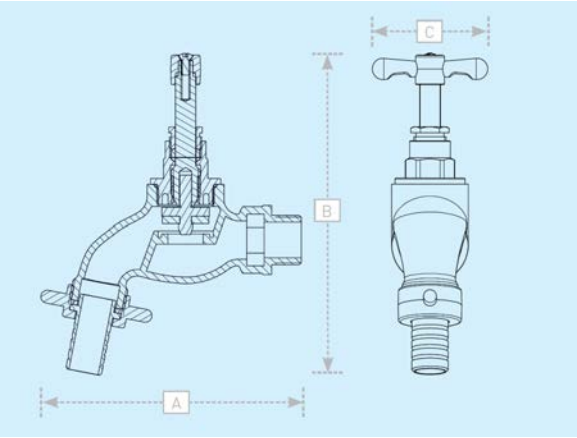

Standard Hose Union Bibcock

Part Number	Size (inlet)	Headworks	A (mm)	B (mm)	C (mm)	Pack Quantity			Weight (Kg each)
						Bag	Box	Carton	
HUB53PRC02	½" Male	Crutch Head	87	132	32				0.48
HUB53PRC03	¾" Male	Crutch Head	118	156	41				0.82

Hose Union Bibcock with Dual Check Valve

Part Number	Size (inlet)	Headworks	A (mm)	B (mm)	C (mm)	Pack Quantity			Weight (Kg each)
						Bag	Box	Carton	
HUB53PCV02	½" Male	Crutch Head	87	132	32		16		0.48

EBCO BS1010
Stopvalve

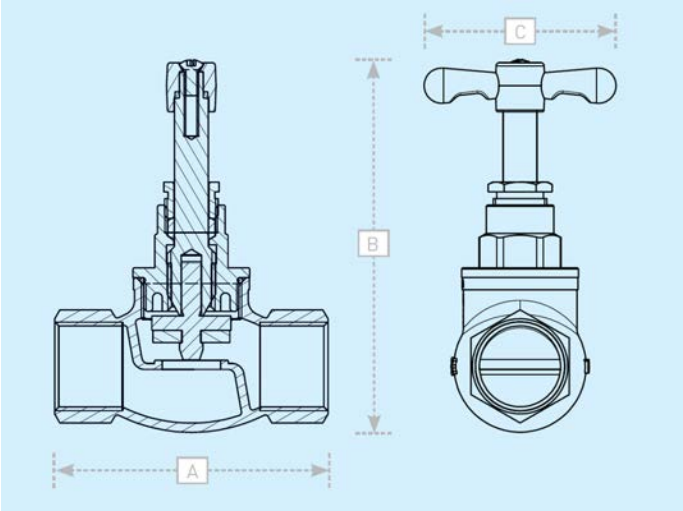

Part Number	Size (inlet/outlet)	Headworks	A (mm)	B (mm)	C (mm)	Pack Quantity			Weight (Kg each)
						Bag	Box	Carton	
SV1002FCRK	½" Female	Crutch Head	78	116	44		20		0.50
SV1003FCRK	¾" Female	Crutch Head	89	121	4520		15		0.60

EBCO BS1010
Spherical Ball Valve - BSP Female

Part Number	Size (inlet/outlet)	Headworks	A (mm)	Pack Quantity			Weight (Kg each)
				Bag	Box	Carton	
EB11-211	½" x ½" Female	¼ Turn Fan Head	75				0.45
EB11-233	¾" x ¾" Female	¼ Turn Fan Head	74				0.50
B11-344	1" x 1" Female	¼ Turn Fan Head	94				0.91
B11-566	1½" x 1½" Female	¼ Turn Fan Head	121				2.31
B11-677	2" x 2" Female	¼ Turn Fan Head	137				3.45
EB11-233R	¾" x ¾" Female	360° Fan Head	74				0.50
B11-344R	1" x 1" Female	360° Fan Head	94				0.91

EBCO BS1010
Spherical Ball Valve 90 Degrees-BSP Female

Part Number	Size (inlet/outlet)	Headworks	A (mm)	Pack Quantity			Weight (Kg each)
				Bag	Box	Carton	
BA13344W	1˝ x 1¼ ˝ Female	¼ Turn Fan Head					

EBCO Spherical Ball Valve
Pushfit

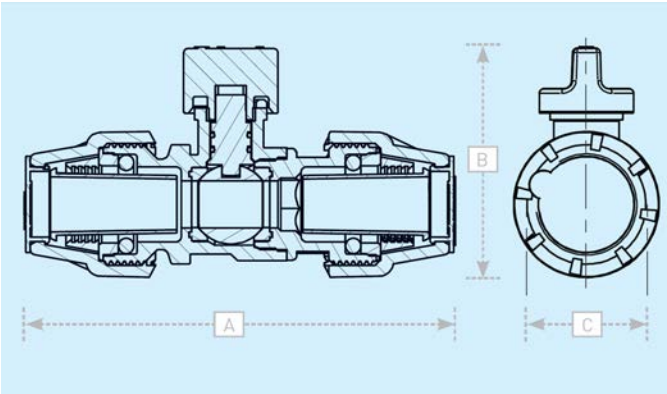

Part Number	Size (inlet/outlet)	Headworks	A (mm)	B (mm)	C (mm)	Pack Quantity			Weight (Kg each)
						Bag	Box	Carton	
SPH92525	25mm x 25mm BPF	¼ Turn Fan Head	173	99	59		20		0.66
SPH88366	32mm x 32mm BPF	¼ Turn Fan Head					12		1.14
SPH02525	25mm x 25mm BPF	360° Fan Head	173	99	59		20		0.65
SPH88366R	32mm x 32mm BPF	360° Fan Head					12		1.12

EBCO Spherical Ball Valve
EBCO-S Compression Fitting (Type B Copper Pipe)

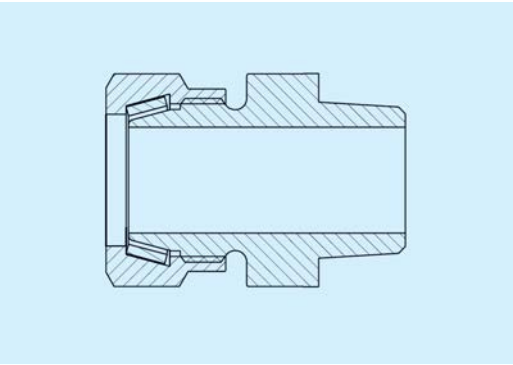

Part Number	Size (inlet/outlet)	Headworks	A (mm)	B (mm)	Pack Quantity			Weight (Kg each)
					Bag	Box	Carton	
EB11-233-22S	22mm x 22mm	¼ Turn Fan Head	151	32		15		0.88
B11-344-28S	28mm x 28mm	¼ Turn Fan Head	183	42		5		1.68
EB11-233-22SR	22mm x 22mm	360° Fan Head	151	32		10		0.88

TALBOT Talflo Valve

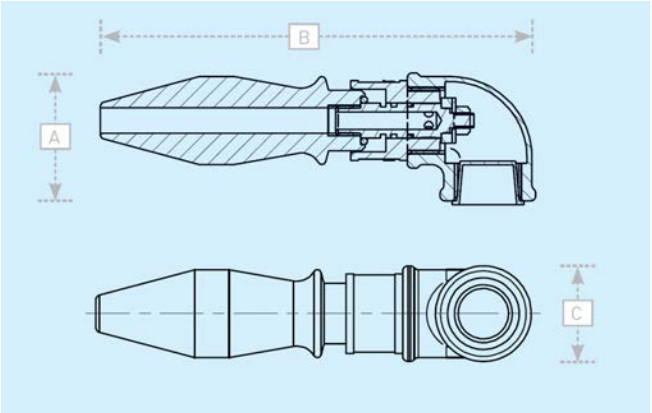

Part Number	Size (inlet/outlet)	A (mm)	B (mm)	C (mm)	Pack Quantity			Weight (Kg each)
					Bag	Box	Carton	
E3336	½"	50	173	38				0.76
E3337	¾"	50	173	38				0.70

EBCO Sampling Tap

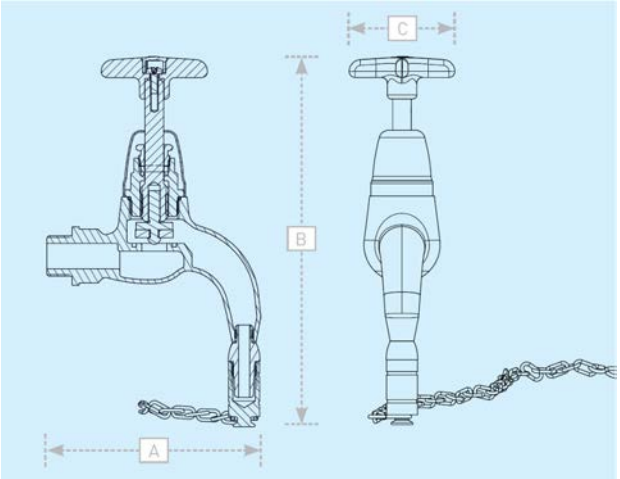

Part Number	Size (inlet/outlet)	A (mm)	B (mm)	C (mm)	Pack Quantity			Weight (Kg each)
					Bag	Box	Carton	
SVSAMP	½" / Vertical	96	188	55		10		0.61
SVSAMP02	¾" / Angular	94	175	55		10		

Replacement Headworks Assemblies

Part Number	Compatible Stopcocks/Stopvalves	Headworks	A (mm)	Pack Quantity			Weight (Kg each)
				Bag	Box	Carton	
TW5402CR	SV5402FCR	Crutch Head	61		20		0.28
	SV5420ZCR				15		
	SV5420BCR						
	SV5415CR				20		
	SV5402MCR						
	SV5403MCR				10		
	E2988				15		
	E2982						
TW5403CR	SV5403FCR	Crutch Head	68		12		0.44
	SV5425ZCR				12		
	SV542BCR				10		
	SV5422CR				12		
	SV5404MCR				15		
	E2993				8		
	E2983						
	E7620						
TW5404CR	SV5404FCR	Crutch Head	85		6		0.82
	SV5432ZCR				8		
	SV5432BCR						
	SV5428CR				6		
	SV5405MCR						
	E2996				8		
	E7621						
TW5406CR	SV5406FCR	Crutch Head	116		3		1.86
	SV5450ZCR				2		
	SV5450BCR				3		
	SV5442SCR				4		
	SV5408MCR				3		
	E2998				3		
	E7622						
TW5408CR	SV5408FCR	Crutch Head	131		2		3.08
	SV5463ZCR						
	SV5463BCR				2		
	SV545SCR						
	E3000				2		
	E3468						
	E7623						
TW1002CR	SV1002FCRK	Crutch Head			20		0.22
TW1003CR	SV1003FCRK	Crutch Head			15		0.26

EBCO Gunmetal Hose Fittings Technical Data

The EBCO range of gunmetal marine fittings includes hose connectors, blanking caps, strainer bodies and strainer body caps for use with BSP threaded pipes. Sizes range from ½" to 4" and the use of corrosion immune materials ensure a long and trouble free working life.

EBCO Hexagon Hose Connectors

Available in either straight or bent (90° elbow) configurations, gunmetal hose connectors are supplied with either a male BSP thread with hexagon shoulder or a female BSP thread with hexagon nut and loose serrated tail. Sizes range from ½" to 4".

EBCO Lugged Blanking Caps

Cast gunmetal cap with lugs, brass chain and nitrile washer. Sizes range from ½" to 4".

EBCO Strainer Bodies and Caps

A gunmetal water intake strainer and cap for use with nylon filter inserts. Sizes range from ½" to 1½". Supplied without nylon filter insert.

Sizes:	½" to 4"
Thread Types:	BS EN ISO 228-1 (BS2779)
Materials	Metallic parts: Gunmetal to BS EN 1982:2008 CC491K and Brass. Washers: Nitrile Rubber

Benefits:

- Made from corrosion resistant gunmetal, EBCO hose fittings will provide years of trouble free service in even the most arduous of conditions.
- Available in a wide range of sizes, from ½" to 4" depending on product type, to cover the most common applications.

Safety

As with all industrial products it is important to take adequate safety precautions such as the use of adequate protective clothing like gloves, overalls, eye protection and safety footwear during installation and maintenance of this product.

Application

These products are designed for use with cold potable water. Save with the express written permission of TALIS-UK Ltd, no warranty is given for any other use.

Dimensions and weights are provided for guidance only.

Technical Help:

For further technical data, product specifications and general information please contact Customer Service on:
+44 (0)845 077 9797

EBCO Hexagon Hose Connector - Male

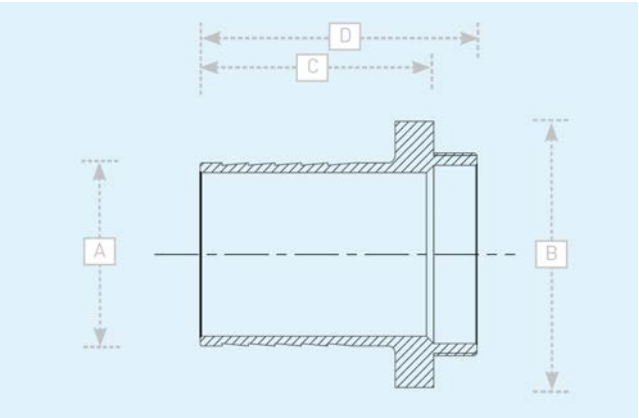

Part Number	Inlet	Hose	A (mm)	B (mm)	C (mm)	D (mm)	Pack Quantity			Weight (Kg each)
							Bag	Box	Carton	
H12B0202	½" Male	½"	14	28	39	61		1		0.08
H12B0303	¾" Male	¾"	20	33	38	59		1		0.12
H12B0404	1" Male	1"	26	40	52	79		1		0.20
H12B0505	1¼" Male	1¼"	32	50	51	79		1		0.29
H12B0606	1½" Male	1½"	38	55	56	82		1		0.34
H12B0808	2" Male	2"	51	76	68	98		1		0.63
H12B1010	2½" Male	2½"	64	87	76	110		1		0.90
H12B1212	3" Male	3"	76	97	79	120		1		1.46
H12B1616	4" Male	4"	102	130	110	157		1		3.19

EBCO Hexagon Hose Connector - Female

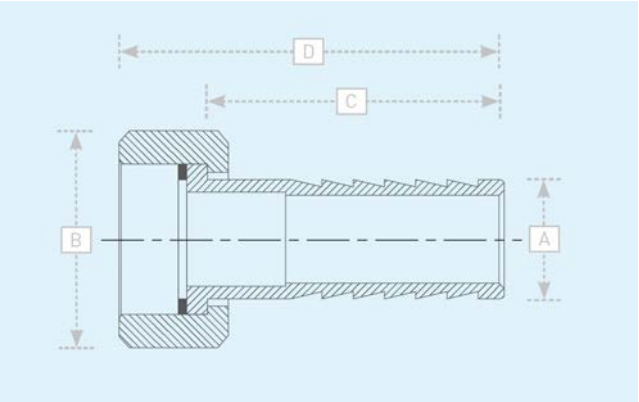

Part Number	Inlet	Hose	A (mm)	B (mm)	C (mm)	D (mm)	Pack Quantity			Weight (Kg each)
							Bag	Box	Carton	
H24HS02F	½" Female	½"	14	25	38	49		1		0.06
H24HS03F	¾" Female	¾"	19	30	49	63		1		0.11
H24HS04F	1" Female	1"	26	40	54	68		1		0.18
H24HS05F	1¼" Female	1¼"	32	48	60	87		1		0.28
H24HS06F	1½" Female	1½"	38	60	70	86		1		0.44

EBCO Bent Hexagon Hose Connector - Male

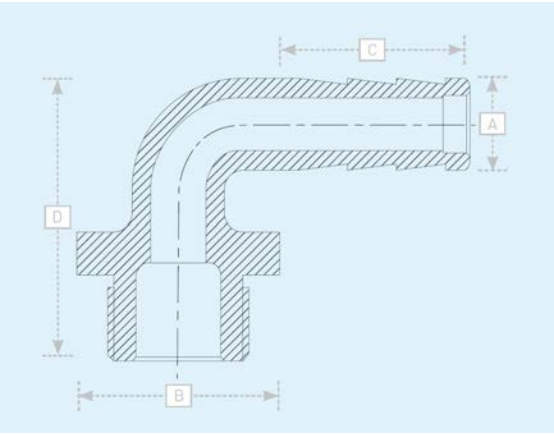

Part Number	Inlet	Hose	A (mm)	B (mm)	C (mm)	D (mm)	Pack Quantity			Weight (Kg each)
							Bag	Box	Carton	
HBHS02M	½" Male	½"	14	30	28	42		1		0.09
HBHS03M	¾" Male	¾"	19	33	32	52		1		0.16
HBHS04M	1" Male	1"	26	40	29	69		1		0.28
HBHS05M	1¼" Male	1¼"	31	48	41	76		1		0.40
HBHS06M	1½" Male	1½"	38	58	50	93		1		0.77
HBHS08M	2" Male	2"	15	76	61	117		1		1.27

EBCO Bent Hexagon Hose Connector - Female

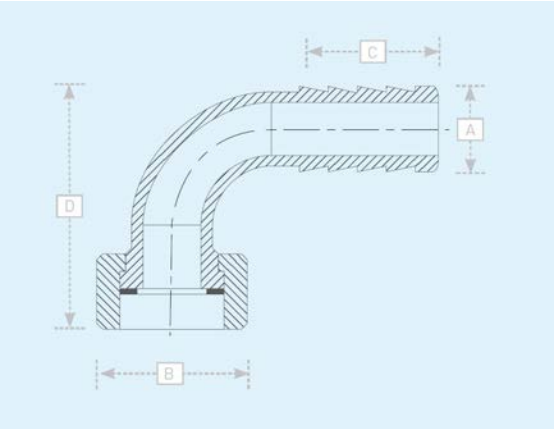

Part Number	Inlet	Hose	A (mm)	B (mm)	C (mm)	D (mm)	Pack Quantity			Weight (Kg each)
							Bag	Box	Carton	
HBHS02F	½" Female	½"	14	25	21	45		1		0.08
HBHS03F	¾" Female	¾"	20	30	33	57		1		0.17
HBHS04F	1" Female	1"	26	40	41	64		1		0.28
HBHS05F	1¼" Female	1¼"	32	48	49	76		1		0.39
HBHS08F	2" Female	2"	51	69	60	132		1		1.20

EBCO Lugged Blanking Cap and Chain

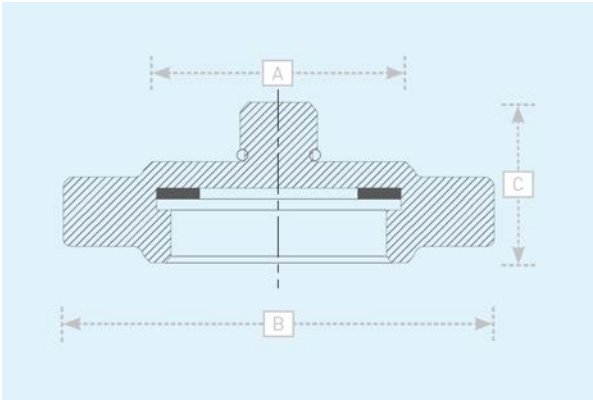

Part Number	Cap	Thread	A (mm)	B (mm)	C (mm)	Pack Quantity			Weight (Kg each)
						Bag	Box	Carton	
HLBC02	½"	½" Female	26	46	27		1		0.08
HLBC03	¾"	¾" Female	33	59	29		1		0.14
HLBC04	1"	1" Female	41	70	33		1		0.18
HLBC05	1¼"	1¼"Female	50	81	36		1		0.22
HLBC06	1½"	1½" Female	58	92	43		1		0.42
HLBC08	2"	2" Female	70	112	42		1		0.50
HLBC10	2½"	2½"Female	87	127	50		1		0.87
HLBC12	3"	3" Female	103	152	49		1		1.01

EBCO Strainer Body

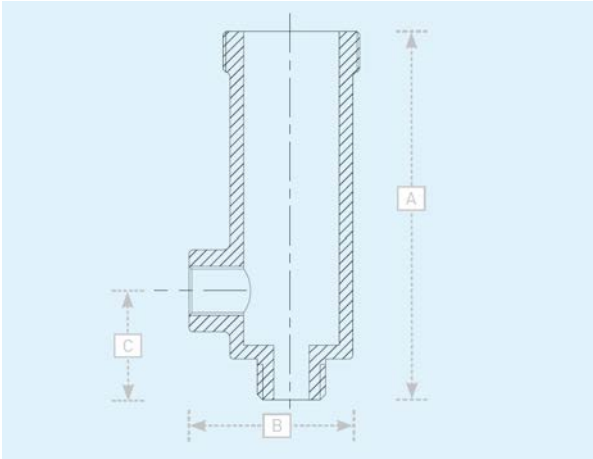

Part Number	Inlet (Tapered)	Outlet (Parallel)	A (mm)	B (mm)	C (mm)	Pack Quantity			Weight (Kg each)
						Bag	Box	Carton	
HSB02	½" Male	½" Female	133	57	42		1		0.53
HSB03	¾" Male	¾" Female	203	65	58		1		0.80
HSB03s	¾" Male	¾" Female	137	65	58		1		0.62
HSB04	1"Male	1"Female	222	70	65		1		1.12
HSB05	1¼"Male	1¼ Female	256	78	102		1		1.34
HSB06	1½" Male	1½" Female	260	80	111		1		1.48

EBCO Strainer Body Cap

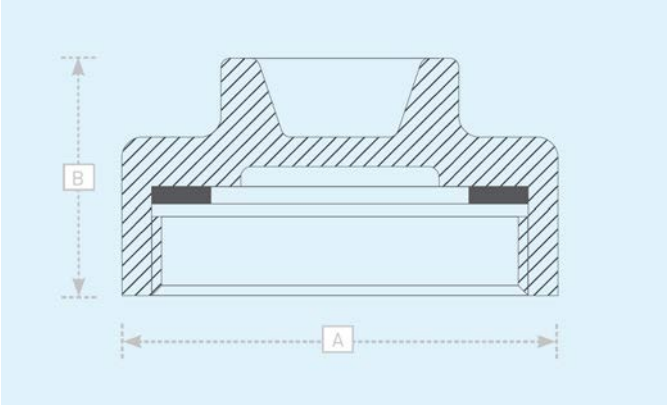

Part Number	Inlet (Tapered)	Outlet (Parallel)	A (mm)	B (mm)	Pack Quantity			Weight (Kg each)
					Bag	Box	Carton	
HSC02	½"	1½" Female	54	30		1		0.24
HSC03	¾"	1½" Female	54	30		1		0.24
HSC04	1"	1½" Female	54	30		1		0.24
HSC05	1¼"	1¾"Female	60	30		1		0.28
HSC06	1½"	1¾" Female	60	30		1		0.28

www.talis-uk.com

TALIS is the undisputed Number One for water transport and water flow control. TALIS has the best solutions available in the fields of water and energy management as well as for industrial and communal applications. We have numerous products for comprehensive solutions for the whole water cycle – from hydrants, butterfly valves and knife gate valves through to needle valves. Our experience, innovative technology, global expertise and individual consultation processes form the basis for developing long-term solutions for the efficient treatment of the vitally important resource "water".

TALIS UK
Brackla Industrial Estate
Bridgend, Wales CF31 2AX
United Kingdom
PHONE +44 (0)845 077 9797
FAX +44 (0)845 077 9798
E-MAIL enquiries@talis-group.com
INTERNET www.talis-uk.com

Note: Specifications may be changed without notification at any time. Copyright: No copying without express written permission of TALIS. TALIS is a Registered Trademark.
House Connection Catalogue (11/15)

BELGICAST is a company of
TALIS

Belgicast

Pipe Fittings

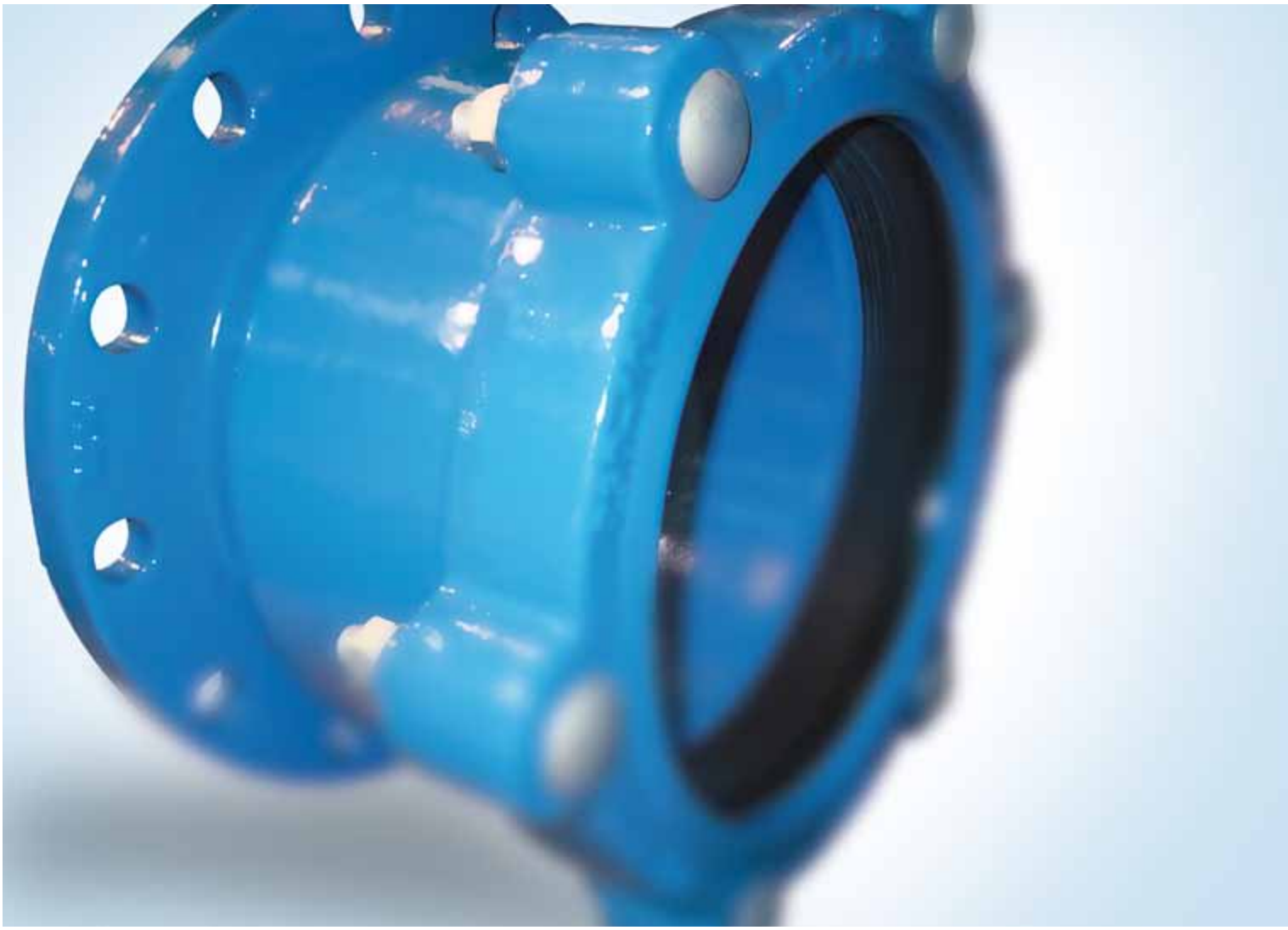

TALIS – the number one choice for all valve-related products.

TALIS is the major brand whenever products and services are needed for the water cycle. The brands ATLANTIC PLASTICS, BAYARD, BELGICAST, ERHARD, FRISCHHUT, SCHMIEDING, STRATE, UNIJOINT and WAFREGA are united under this name to provide a unique comprehensive service that provides the best solution for every application. Our global experience and the in-depth knowledge of our employees are the basis for TALIS' innovative strength. In our quest for new sustainable solutions, we regularly set new milestones in valve technology. And have been doing so for more than 100 years.

Our main focus is always on increasing efficiency in handling the resource water, on a long service life and economic feasibility.

TALIS products meet the most stringent quality standards and are certified all over the world.

TALIS

YOUR CHOICE IN WATERFLOW CONTROL

Established in 1957, Belgicast is a leader company in the manufacturing of gate valves, check valves and butterfly valves, as well as universal couplings and flanged adaptors commonly used in clean and sewage water applications, in natural gas and industrial processes.

Our range of products features diameters from 20 up to 2200 mm and nominal pressures from 10 up to 40 kg/cm^2 in accordance with DIN, ISO, BS5, ANSI, JIS, API.

The purpose of this catalogue is to inform our customers about the wide range of pipe fittings Belgicast manufactures: saddles, couplings, flange adaptors for all type of pipes, and fittings for PVC pipes. We would like to highlight that with our saddles we cover nominal diameters up to 1000 mm, valid for PVC, spigot ends, ductile cast iron and PE pipes. In the field of flange adaptors and couplings, we cover outside diameters up to 2000 mm and tolerances up to 235 mm. Valid to fit all kind of pipes. With all these products Belgicast offers you the most complete range of pipe fittings, and our R+D team keeps on studying the market requirements for future innovations.

Do not hesitate to contact us with any suggestions or queries about our products, we will be glad to help you!

Manufacturing Program

Belgicast

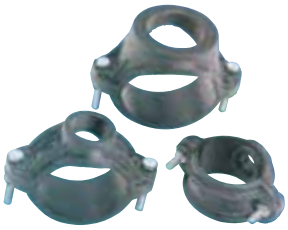

6 Saddle for PVC pipes. Series 700

6 Saddle for spigot pipes. Series 750

6 Saddle for ductile iron pipes. Series 790

7 Multidiameter saddle. Series 800

8 Saddle for PVC/PE pipes. Series 1300

9 Saddle with flange outlet for PVC/PE pipes. Series 2300

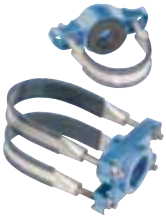

10 Universal saddle. Series 1400

10 Working-pipe universal saddle. Series 1410

11 Universal saddle with outlet flange. Series 1425

12 Stainless steel bands. Series 1450

14 Under pressure shut-off adapter. Series 1415

15 Automatic drill. Series 1480 and 1490

16 Gibault coupling for PVC pipes. Series 1000

18 Telescopic dismantling joint. Series 1020

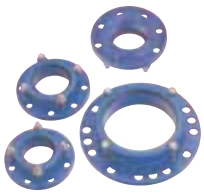

18 Socket flange coupling for PVC pipes. Series 1050

Manufacturing Program

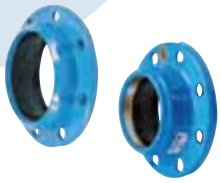

19 Major and Major Stop flange adaptor

20 Universal coupling "Liberty". Series 1200L

21 Eurocoup coupling

22 Universal flange "Liberty". Series 2200L

23 Eurocoup flange adapter

25 Coupling and flange adaptor for PE pipes. Series 1800 and 2800

26 Multidiameter coupling. Series 3100. 43 mm tolerance

27 Multidiameter flange adaptor. Series 3200. 43 mm tolerance

28 Universal stepped coupling. Series 1500

29 High-tolerance stepped coupling. Series 3500. 235 mm tolerance

30 Fittings for PVC pipes. Series 4000

Saddle for PVC pipes. Series 700

Belgicast

Series 700

- Grey cast iron GG-25 quality, with anticorrosive coating.
- Zinc plated nuts and bolts
- Gas thread according to DIN standards.

REF.	Ø pipe	Outlet
701	32	½"
701-A	32	¾"
702	40	¾"
703	40	1"
704	50	¾" - 1"
705	63	¾" - 1"
706	75	¾" - 1"
707	75	1 ¼" - 1 ½"
708	90	¾" - 1"
709	90	1 ¼" - 1 ½"
710	110	¾" - 1" - 1 ¼" - 1 ½"
711	110	2" - 2 ½" - 3"
712	125	¾" - 1" - 1 ¼" - 1 ½"
713	125	2" - 2 ½" - 3"
714	140	¾" - 1" - 1 ¼" - 1 ½"
715	140	2" - 2 ½" - 3"
716	160	¾" - 1" - 1 ¼" - 1 ½"
717	160	2" - 2 ½" - 3"
718	180	1" - 1 ¼" - 1 ½"
719	180	2" - 2 ½" - 3"
720	200	1" - 1 ¼" - 1 ½"
721	200	2" - 2 ½" - 3"
722	250	1" - 1 ¼" - 1 ½"
723	250	2" - 2 ½" - 3"
724	315	2" - 2 ½" - 3"

MATERIAL: GG-25

USE: PVC pipes

Saddle for Spigot end pipes. Series 750

Series 750

- Grey cast iron GG-25 quality, with anticorrosive coating.
- Zinc plated nuts and bolts
- Gas thread according to DIN standards.

REF.	Ø pipe	Outlet
751	Ø 50	¾" - 1"
752	Ø 60	¾" - 1"
752-A	Ø 60	1 ¼" - 1 ½"
753	Ø 70	¾" - 1"
754	Ø 80	¾" - 1"
754-A	Ø 80	1 ¼" - 1 ½"
755	Ø 100	¾" - 1" - 1 ¼" - 1 ½"
756	Ø 125	¾" - 1" - 1 ¼" - 1 ½"
757	Ø 150	¾" - 1" - 1 ¼" - 1 ½"
757-A	Ø 150	2" - 2 ½" - 3"
758	Ø 175	1" - 1 ¼" - 1 ½"
759	Ø 200	1" - 1 ¼" - 1 ½"
759-A	Ø 200	2" - 2 ½" - 3"
760	Ø 250	2" - 2 ½" - 3"

MATERIAL: GG-25

USE: asbestos cement pipes

Saddle for Ductile Iron Pipes. Series 790

Series 790

- Saddles made of GGG 40 Ductile Iron coated with ANTICORROSIVE coating.

Gasket:

- For water: EPDM, according to UNE EN 681/1.
- For gas: NBR according to UNE EN 549.
- Furnished with bichromated nuts and bolts for maximum corrosion resistance.

REF.	Ø pipe	Outlet	OD	Max. OD
791	60	¾ - 1 - 1 ¼ - 1 ½	77	80
792	80	¾ - 1 - 1 ¼ - 1 ½	98	101
793	100	1 - 1 ¼ - 1 ½ - 2	118	122
794	125	1 - 1 ¼ - 1 ½ - 2	144	148
795	150	1 - 1 ¼ - 1 ½ - 2	170	174
796	175	1 - 1 ¼ - 1 ½ - 2	195	199
797	200	1 - 1 ¼ - 1 ½ - 2	222	226
798	250	1 - 1 ¼ - 1 ½ - 2 - 2 ½ - 3	274	278
799	300	1 - 1 ¼ - 1 ½ - 2 - 2 ½ - 3	326	330

MATERIAL: Ductile iron GGG 40

USE: Ductile iron pipelines for water and gas.

Multidiameter saddle Series 800

Technical specifications

- The set of diameters included in a simple unit is very large, due to the lateral wedges fixing system and to the "half-moon" designed gasket.

- It also is completely useful as:
  – pipe repair clamp
  – GIBAULT joint

● Maximal working pressure = 16 kg/cm²
● Testing pressure = 1,5 x PN

With the multidiameter saddle we manage to close the diameter Ø A with the same uniform pressure along the whole tube-circle, by simply tightening the lateral screws.

MATERIAL: GGG-40

USE: All type of pipes (D.I., PVC, PE,...)

FUNCTIONAL PARTS

- a Lower and upper bodies
- b Lateral wedges
- c Half-moon gaskets
- d Bolts

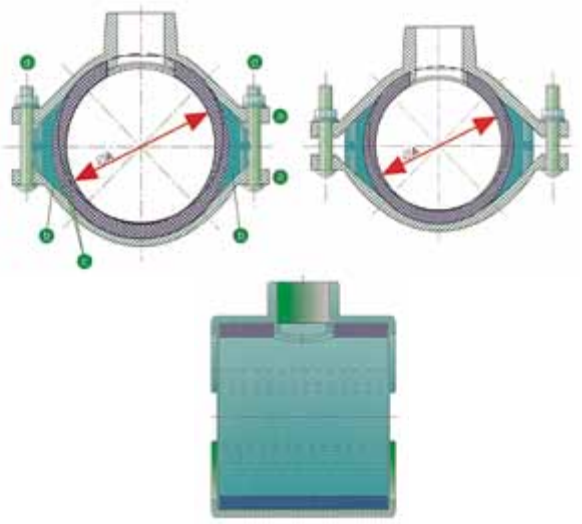

REF.	Outlet D	Nominal D	Range (mm)		Length	Screws	
			min.	max.		quantity	size
801	1"	80-3"	58	100	150	4	M14x110
802	1 ½"						
803	2"						
804	1"	100-4"	78	120	160	4	M14x110
805	1 ½"						
806	2"						
807	1"	125-5"	104	145	180	4	M16x110
808	1 ½"						
809	2"						
810	1"	150-6"	130	172	210	4	M16x110
811	1 ½"						
812	2"						
813	1"	200-8"	180	225	270	6	M16x110
814	1 ½"						
815	2"						

Part	Name	Material	Coating
a	Bodies	GGG 40	Epoxy
b	Wedges	GGG 40	Epoxy
c	Gaskets	EPDM	
d	Bolts	Quality 8.8	Bichromated

Saddle for PVC/PE pipes Series 1300

MATERIAL: GGG 40

USE: PVC and PE pipes

- The LEYA saddle allows full screwing, therefore guaranteeing complete watertightness. It is made of GGG 40 ductile cast iron, approx. 120 to 180 micron resin coated.
- Watertight gasket: EPDM, according to UNE EN 681/1.
- Fitted with stainless steel bolts A2-DIN 933 and stainless steel washers AISI 304 - DIN 125.

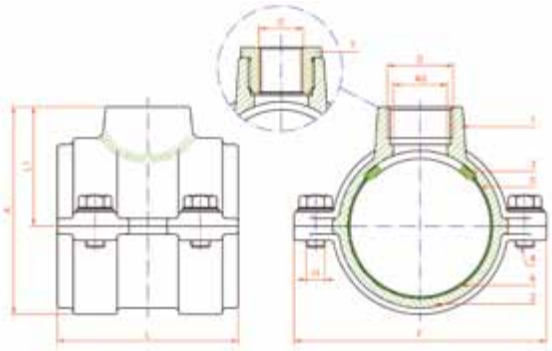

	OUTLET					
Ø mm	½"	¾"	1"	1 ¼"	1 ½"	2"
25	X	X	X	X	X	X
32	●	●	X	X	X	X
40	●	●	●	X	X	X
50	○	●	●	●	X	X
63	○	●	●	●	●	●
75	○	○	●	●	●	●
90	○	○	●	●	●	●
110	○	○	●	●	●	●
125	○	○	●	●	●	●
140	○	○	●	●	●	●
160	○	○	●	●	●	●
180	○	○	●	●	●	●
200	○	○	●	●	●	●
225	○	○	○	○	○	●
250	○	○	○	●	○	●
280	○	○	○	○	○	●
315	○	○	○	○	○	●

● Standard design
○ Available with reduction nut

REF.	Ø PIPE	D ½"	d	L	L1	A	F	H	WEIGHT Kg
1301-0012	32	½"	15	65	39	65	91	M8x20	0.8
1302-0034	32	¾"	20	65	39	65	91	M8x20	0.8
1303-0012	40	½"	15	65	42	82	99	M8x20	1
1304-0034	40	¾"	20	65	45	85	99	M8x20	1
1305-1000	40	1"	26	65	51	91	99	M8x20	1
1306-0034	50	¾"	20	90	50	85	114	M10x25	1.4
1307-1000	50	1"	26	90	56	91	114	M10x25	1.4
1308-0014	50	1 ¼"	34	90	56	91	114	M10x25	1.4
1309-0034	63	¾"	20	90	56	98.5	129	M10x25	1.7
1309-1000	63	1"	26	90	62	104.5	129	M10x25	1.7
1310-1014	63	1 ¼"	34	90	62	104.5	129	M10x25	1.7
1311-1012	63	1 ½"	40	90	70	110.5	129	M10x25	1.7
1312-2000	63	2"	52	90	70	110.5	129	M10x25	1.7
1313-1000	75	1"	26	115	68	116.5	141	M10x25	2.3
1314-1014	75	1 ¼"	34	115	68	116.5	141	M10x25	2.3
1315-1012	75	1 ½"	40	115	76	124.5	141	M10x25	2.3
1316-2000	75	2"	52	115	76	124.5	141	M10x25	2.3
1317-1000	90	1"	26	115	76	132	161	M12x25	2.8
1318-1014	90	1 ¼"	34	115	76	132	161	M12x25	2.8
1319-1012	90	1 ½"	40	115	83	139	161	M12x25	2.8
1320-2000	90	2"	52	115	83	139	161	M12x25	2.8
1321-1000	110	1"	26	115	86	153	189	M12x25	3.5
1322-1014	110	1 ¼"	34	115	86	153	189	M12x25	3.5
1323-1012	110	1 ½"	40	115	93	160	189	M12x25	3.5
1324-2000	110	2"	52	115	93	160	189	M12x25	3.5
1325-1000	125	1"	26	115	93	167.5	204	M12x25	3.8
1326-1014	125	1 ¼"	34	115	93	167.5	204	M12x25	3.8
1327-1012	125	1 ½"	40	115	100	174.5	204	M12x25	3.8
1328-2000	125	2"	52	115	100	174.5	204	M12x25	3.8
1329-1000	140	1"	26	140	101	183	219	M12x25	4.7
1330-1014	140	1 ¼"	34	140	101	183	219	M12x25	4.7
1331-1012	140	1 ½"	40	140	108	190	219	M12x25	4.7
1332-2000	140	2"	52	140	108	190	219	M12x25	4.7
1333-1000	160	1"	26	140	111	203	239	M12x25	5.2
1334-1014	160	1 ¼"	34	140	111	203	239	M12x25	5.2
1335-1012	160	1 ½"	40	140	118	210	239	M12x25	5.2
1336-2000	160	2"	52	140	118	210	239	M12x25	5.2
1337-1000	180	1"	26	180	121	223	259	M12x25	7.7
1338-1014	180	1 ¼"	34	180	121	223	259	M12x25	7.7
1339-1012	180	1 ½"	40	180	128	230	259	M12x25	7.7
1340-2000	180	2"	52	180	128	230	259	M12x25	7.7
1341-1000	200	1"	26	180	131	243	279	M12x25	8
1342-1014	200	1 ¼"	34	180	131	243	279	M12x25	8
1343-1012	200	1 ½"	40	180	138	250	279	M12x25	8
1344-2000	200	2"	52	180	138	250	279	M12x25	8
1345-1000	225	1"	26	180	143	267.5	304	M12x25	9
1346-1014	225	1 ¼"	34	180	143	267.5	304	M12x25	9
1347-1012	225	1 ½"	40	180	151	275.5	304	M12x25	9
1348-2000	225	2"	52	180	151	275.5	304	M12x25	9
1349-1000	250	1"	26	180	156	293	329	M12x25	9.8
1350-1014	250	1 ¼"	34	180	156	293	329	M12x25	9.8
1351-1012	250	1 ½"	40	180	163	300	329	M12x25	9.8
1352-2000	250	2"	52	180	163	300	329	M12x25	9.8
1353-1000	280	1"	26	180	171	323	359	M12x25	10.6
1354-1014	280	1 ¼"	34	180	171	323	359	M12x25	10.6
1355-1012	280	1 ½"	40	180	178	330	359	M12x25	10.6
1356-2000	280	2"	52	180	178	330	359	M12x25	10.6
1357-1000	315	1"	26	180	188	357.5	394	M12x25	13
1358-1014	315	1 ¼"	34	180	188	357.5	394	M12x25	13
1359-1012	315	1 ½"	40	180	196	365.5	394	M12x25	13
1360-2000	315	2"	52	180	196	365.5	394	M12x25	13

Saddle with flange oulet for PVC/PE pipes. Series 2300

Technical specifications

- The most complete family of saddles with flange outlet for PVC/PE pipes.
- Nodular cast iron GGG-50 quality. EPOXY coating (150 micron).
- AISI-304 quality stainless steel nuts and bolts.
- Suitable for PN-10 and PN-16 (EN-1092-2).

MATERIAL: GGG 50

USE: PVC / PE pipes

REF.	Ø Pipe	DN
2301-0040	63	40
2301-0050		50
2302-0040	75	40
2302-0050		50
2303-0040	90	40
2303-0050		50
2303-0060		60/65
2304-0040	110	40
2304-0050		50
2304-0060		60/65
2304-0080		80
2305-0050	125	40
2305-0050		50
2305-0060		60/65
2305-0080		80

REF.	Ø Pipe	DN
2306-0040	140	40
2306-0050		50
2306-0060		60/65
2306-0080		80
2306-0100		100
2307-0040	160	40
2307-0050		50
2307-0060		60/65
2307-0080		80
2307-0100		100
2308-0040	180	40
2308-0050		50
2308-0060		60/65
2308-0080		80
2308-0100		100

REF.	Ø Pipe	DN
2309-0040	200	40
2309-0050		50
2309-0060		60/65
2309-0080		80
2309-0100		100
2310-0040	219,1	40
2310-0050		50
2310-0060		60/65
2310-0080		80
2310-0100		100
2311-0040	225	40
2311-0050		50
2311-0060		60/65
2311-0080		80
2311-0100		100

REF.	Ø Pipe	DN
2312-0050	250	50
2312-0080		80
2312-0100		100
2312-0150		150
2313-0050	280	50
2313-0080		80
2313-0100		100
2313-0150		150
2314-0050	315	50
2314-0080		80
2314-0100		100
2314-0150		150
2315-0050	400	50
2315-0080		80
2315-0100		100
2315-0150		150

Universal saddle. Series 1400

- Universal saddle body manufactured in GGG 40 epoxy coated.
- Gasket manufactured in EPDM according to UNE EN 681/1.
- AISI-304 stainless steel band (Series 1450).

BODY OR HEAD CROSS-REFERENCE CHART				
REF.		Head	Nominal Ø covered	Outlet thread for gas
1400	One Band	Small	50/1000	½"- ¾" - 1"
1401	One Band	Medium	80/1000	1" - 1 ¼" - 1 ½"
1401-A	One Band	Medium	80/700	2"
1402	Two Bands	Large	125/700	2 ½"
1402-A	Two Bands	Large	125/700	3"

MATERIAL: GGG-40

USE: All type of pipes.
For PVC / PE please enquire.

A single head to fit pipes of all diameters.

FUNCTIONAL ADVANTAGES

Both the body and the gasket fit nine nominal diameters for different tubes.

Work-pipe universal saddle. Series 1410

Single body (head) means we can cover 8-9 nominal diameters for different pipes.

Guaranteed watertight.

Body manufactured in GGG 40 + CATAPHORESIS

Joint manufactured in EPDM according to UNE EN 681/1.

AISI - 304 stainless steel band (Series 1450).

Stainless steel spatula (AISI-304).

Cast iron hexagonal head reducing screw.

MATERIAL: GGG-40

USE: All type of pipes.
For PVC / PE please enquire.

Instructions for connection to working pipe

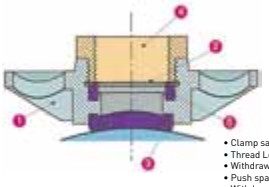

1. Saddle head
2. Spatula
3. Pipe closing gasket
4. Hexagonal head reducing screw
5. Watertight closing gasket

- Clamp saddle to pipe.
- Thread Leya drill in intake ring and perforate pipe.
- Withdraw cutter or drill to a position above slot.
- Push spatula into slot to cut off water flow.
- Withdraw drill and complete connection.
- Withdraw spatula.
- Closure is now watertight because joint in figure covers space left free by the spatula.

BODY OR HEAD CROSS-REFERENCE CHART				
REF.		Head	Nominal Ø covered	Exit thread for gas
1410	One Band	Small	50/1000	¾" - 1"
1411	One Band	Big	80/1000	1" - 1 ¼" - 1 ½"
1412	One Band	Big	80/700	2"

1420	Big Spatula (Ref. 1411-1412)
1421	Small Spatula (Ref. 1410)

Universal saddle with outlet flange. Series 1425

- Ductile iron GGG-40 epoxy coated outlet flange.
- EPDM gasket according to UNE EN 681/1.
- Mechanical insertion of the gasket in order to guarantee major watertightness.
- One flanged saddle for pipes of different nominal diameters.
- AISI-304 stainless steel band (Series 1450).

MATERIAL: GGG-40

USE: All type of pipes.
For PVC / PE please enquire.

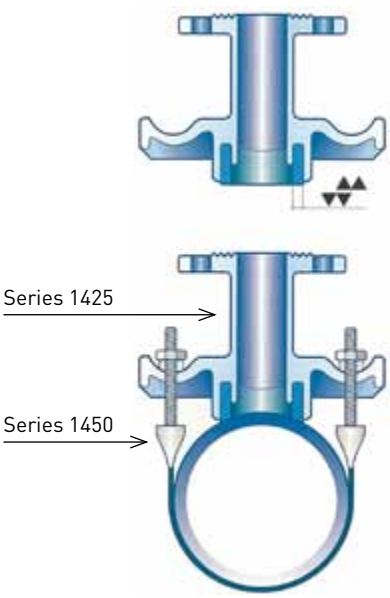

REF.	DN	DN PIPE		PN	Bands no.
		min	max		
1425	40	80	1000	10/16	2
1426	50	80	700	10/16	2
1427	60/65	100	700	10/16	2
1428	80	125	600	10/16	2
1428-F	80	600	750	10/16	2
1429	100	150	500	10/16	2
1429-E	100	500	800	10/16	2
1429-A	125	200	600	10/16	2
1430	150	500	900	10/16	3
1430-A	150	300	500	10/16	3
1431	200	450	1300	10	4
1431-A	200	450	1300	16	4

Stainless steel bands
Series 1450

- **AISI-304** Stainless steel bands.
- **EPDM-65** Rubber.
- **M-14** Stainless steel screw, nut and washer **AISI 304**.

For others sizes the stainless steel band will be made upon request.
(*) Saddles with extension = 1467-A000

APPLICATION SADDLES

REF.	Ø Outer pipe	Series 1400	Series 1410	Series 1425
1450-000A	50/75	1400	1410	–
1451-000A	80/105	1400, 1401, 1401-A	1410, 1411, 1412	1425, 1426
1452-000A	105/130	1400, 1401, 1401-A	1410, 1411, 1412	1425, 1426, 1427
1452-000A	130/155	1400, 1401, 1401-A	1410, 1411, 1412	1425, 1426, 1427, 1428
1454-000A	155/180	1400, 1401, 1401-A, 1402, 1402-A	1410, 1411, 1412	1425, 1426, 1427, 1428, 1429
1455-000A	180/200	1400, 1401, 1401-A, 1402, 1402-A	1410, 1411, 1412	1425, 1426, 1427, 1428, 1429
1456-000A	200/220	1400, 1401, 1401-A	1410, 1411, 1412	–
1456-000B		1402, 1402-A	–	1425, 1426, 1427, 1428, 1429, 1429-A
1457-000A	220/240	1400, 1401, 1401-A	1410, 1411, 1412	–
1457-000B		1402, 1402-A	–	1425, 1426, 1427, 1428, 1429
1457-000C		–	–	1429-A
1458-000A	240/260	1400, 1401, 1401-A	1410, 1411, 1412	–
1458-000B		1402, 1402-A	–	1425, 1426, 1427, 1428, 1429
1458-000C		–	–	1429-A
1459-000A	260/280	1400, 1401, 1401-A	1410, 1411, 1412	–
1459-000B		1402, 1402-A	–	1425, 1426, 1427, 1428, 1429
1459-000C		–	–	1429-A
1460-000A	280/300	1400, 1401, 1401-A	1410, 1411, 1412	–
1460-000B		1402, 1402-A	–	1425, 1426, 1427, 1428, 1429
1460-000C		–	–	1429-A
1461-000A	300/320	1400, 1401, 1401-A	1410, 1411, 1412	–
1461-000B		1402, 1402-A	–	1425, 1426, 1427, 1428, 1429
1461-000C		–	–	1429-A, 1430-A
1462-000A	320/340	400, 1401, 1401-A	1410, 1411, 1412	–
1462-000B		1402, 1402-A	–	1425, 1426, 1427, 1428, 1429
1462-000C		–	–	1429-A, 1430-A
1463-000A	340/360	400, 1401, 1401-A	1410, 1411, 1412	–
1463-000B		1402, 1402-A	–	1425, 1426, 1427, 1428, 1429
1463-000C		–	–	1429-A, 1430-A
1464-000A	360/380	400, 1401, 1401-A	1410, 1411, 1412	–
1464-000B		1402, 1402-A	–	1425, 1426, 1427, 1428, 1429
1464-000C		–	–	1429-A, 1430-A

Belgicast

APPLICATION SADDLES				
REF.	OD pipe	Series 1400	Series 1410	Series 1425
1464-100A	380/400	1400, 1401, 1401-A	1410, 1411, 1412	–
1464-100B		1402, 1402-A	–	1425, 1426, 1427, 1428, 1429
1464-100C		–	–	1429-A, 1430-A
1464-200A	400/420	1400, 1401, 1401-A	1410, 1411, 1412	–
1454-200A		1402, 1402-A	–	1425, 1426, 1427, 1428, 1429
1455-200A		–	–	1429-A, 1430-A
1465-000A	420/440	1400, 1401, 1401-A	1410, 1411, 1412	–
1465-000B		1402, 1402-A		1425, 1426, 1427, 1428, 1429
1465-000C			–	1429-A, 1430-A
1465-100A	440/460	1400(*), 1401(*), 1401-A(*)	1410(*), 1411(*), 1412(*)	–
1465-100B		1402, 1402-A	–	1425, 1426, 1427, 1428, 1429
1465-100C		–	–	1429-A, 1430-A
1466-000A	470/490	1400(*), 1401(*), 1401-A(*)	1410(*), 1411(*), 1412(*)	–
1466-000B		1402, 1402-A	–	1425(*), 1426(*), 1427, 1428, 1429
1466-000C		–	–	1429-A, 1430-A
1466-100A	490/510	1400(*)	1410(*)	–
1466-100B		1401(*), 1401-A(*), 1402	1411(*), 1412(*)	–
1466-100C		1402-A	–	1425(*), 1426(*), 1427, 1428, 1429-E
1466-100D		–	–	1429-A, 1430-A
1467-000A	525/545	1400(*)	1410(*)	–
1467-000B		1401(*), 1401-A(*), 1402	1411(*), 1412(*)	–
1467-000C		1402-A	–	1425(*), 1426(*), 1427, 1428, 1429-E
1467-000D		–	–	1429-A, 1430
1467-100A	625/645	1400(*)	1410(*)	–
1467-100B		1401(*), 1401-A(*), 1402(*)	1411(*), 1412(*)	–
1467-100C		1402-A(*)	–	1425(*), 1426(*), 1427(*), 1428-F(*), 1429-E(*)
1467-100D		–	–	1429-A, 1430
1467-200A	830/850	1400(*)	1410, 1411, 1412	–
1467-200B		1401(*), 1401-A(*), 1402(*)	1411(*), 1412(*)	–
1467-200C		1402-A(*)	–	1425(*), 1426(*), 1427(*), 1428-F(*), 1429-E(*)
1467-200D		–	–	1430
1468-000A	450/470			1431/1431-A
1468-000B	470/490			1431/1431-A
1468-000C	490/510			1431/1431-A
1468-000D	525/545			1431/1431-A
1468-000E	625/645			1431/1431-A
1468-000F	710/725			1431/1431-A
1468-000G	830/850			1431/1431-A

Under-pressure shut-off adapter Series 1415

Belgicast

Technical specifications

The adapter is suitable for **all types of saddles** used for under pressure tapping.

Our under pressure shut-off adapter has three functional parts.

1 Adapter **2 Blade** **3 Shut-off cover**

• **Adapter:**
Consists of a body (A) and nut (B), both with a threaded outlet and sealed together; watertightness guaranteed by the seal (C). The body connects to the saddle (d_2) and the application outlet (d_1).

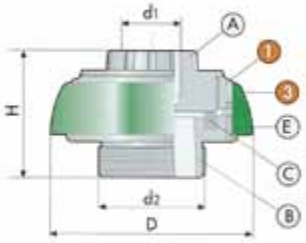

• **Blade**
It is inserted into the adapter by means of a pivoting rotation system, and cuts off the pressure gently and without any effort.

• **Shut-off cover**
Protects the slit in the adapter once the blade has been removed and provides double watertightness.

APPLICATION AND TEST

- For use with both fluids and gases.
- Seal material: UNE EN 549.
- Watertightness tests carried out in accordance with DIN-3387 for gas applications at 16 bar pressure and a test pressure of 24 bar.

INSTRUCTIONS FOR UNDER PRESSURE CONNECTION

- Fit the adapter onto the saddle.
- Remove the shut-off cover from the adapter.
- Fit the Leya drill onto the adapter and perforate the pipe.
- Withdraw the drill or blade, until it is above the slit.
- Insert the blade into the adapter to cut off the passage of fluid.
- Remove the drill and complete the connection.
- Remove the blade.
- Put the shut-off cover on the adapter.

• INTERNATIONAL PATENT

COMPONENTS

MARK	NAME	MATERIAL	COATING
A	NUT	GGG-50	EPOXY BY CATAPHORESIS
B	BODY	GGG-50	EPOXY BY CATAPHORESIS
C	SHUT-OFF-SEAL	UNE EN 549	
E	SHUT-OFF-COVER	POLIETHYLENE	
F	BLADE BODY	AISI-301	
G	HANDLE	POLIETHYLENE	

DIMENSIONS TABLE

REF.	connection d1	outlet d2	H	D	Weight
1415-0012	½"	1 1/4"	60	84	1,1
1415-0034	¾"				
1415-1000	1"				
1415-1014	1 ¼"				
1416-1000	1"	2"	71	114	1,3
1416-1014	1 ¼"				
1416-1012	1 ½"				
1416-2000	2"				

SHUT-OFF FITTING NOT INCLUDED

REF.	NAME	APPLICATION
1418-0000	Small cutting handle	Adapter REF. 1415
1419-0000	Big cutting handle	Adapter REF. 1416

Automatic Drill for pipe tappings Series 1480 - 1490

Technical specifications

Series 1480 (Short Driller)

It is used to drill holes through a **threaded** saddle or valve.

It is supplied with ¾", 1", 1 ¼", 1 ½" and 3"drilling rings.

Series 1490 (Long Driller)

It is used to drill holes through a **flanged** saddle or valve. It is supplied with DN 40, 50, 65, 80 and 100 drilling rings.

Upon request it could also be supplied with ¾",1", 1 ¼", 1 ½" and 3" drilling rings (usually supplied with the short driller), so it could be used also through a **threaded** saddle or valve.

- It drills through cast iron pipes in less than one minute.
- Rotation and feed motions are fully automatic.
- It works in charge and in vacuum, i.e. with or without pressure.

Compatible with the whole range of saddles, including flange-ended saddles.

Technical features

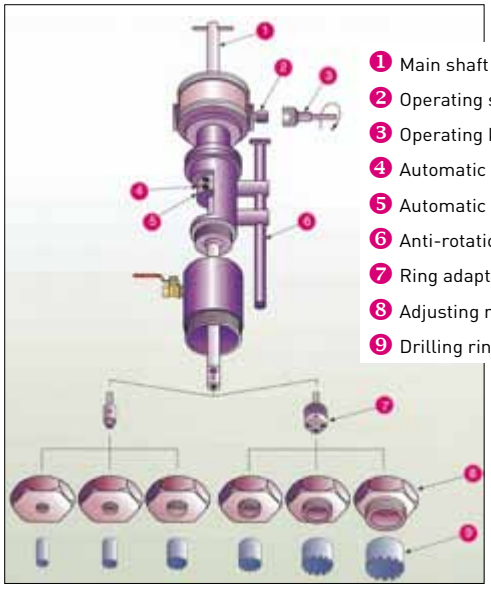

1. Main shaft
2. Operating shaft
3. Operating key
4. Automatic feed clamp
5. Automatic feed safety clamp
6. Anti-rotation bar
7. Ring adapter
8. Adjusting nuts
9. Drilling rings

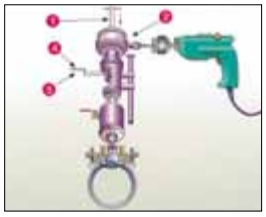

3 Then, the main shaft (1) is manually pushed until the drilling ring touches the pipe. In order to operate the automatic feed, the allen screws of the safety clamp (5) are fastened. Drilling starts when turning the operating shaft (2).

Operation instructions

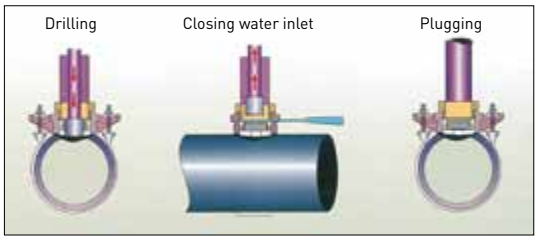

1 The adjusting nut (8) and the drilling ring (9) are chosen according to saddle end.

2 The drilling ring (9) and the adjusting nut (8) are fixed onto the machine, and the machine onto the saddle (11) by inserting the anti-rotation bar (6).

4 When drilling is finished, the automatic feed is switched off by loosening screws (4) and (5). The drilling ring is taken out of the pipe, bearing in mind that if the hole has been drilled on a working-pipe intake ring, the water inlet must be closed either by means of the spatula or the valve (12).

Finally, the drill is disconnected from the collar and the new connecting pipe can be fitted.

Gibault coupling for PVC pipes Series 1000

Belgicast

Technical specifications

- Nodular cast iron, GGG-50 quality, epoxy coated.
- PN-10 and PN-16 operating pressure.
- EPDM rubber seals for water and NBR for gas upon request.
- Range of diameters from 50 to 630 mm.

REF.	Ø d	A	B	C	Weight (kg)
1000-A000	50	116	131	97	1,20
1001-A000	63	137	150	116	1,92
1002-A000	75	149	154	116	2,54
1003-A000	90	164	154	116	3,36
1004-A000	110	184	175	137	4,01
1005-A000	125	199	175	137	4,59
1006-A000	140	214	179	137	5,93
1007-A000	160	234	215	177	7,05
1008-A000	180	254	215	177	7,75
1009-A000	200	274	219	177	8,28
1010-A000	250	341	241	177	16,64
1011-A000	315	406	241	185	18,47
1012-A000	400	495	243	181	23,00
1013-A000	500	592	243	181	27,50
1014-A000	630	753	243	181	31,80

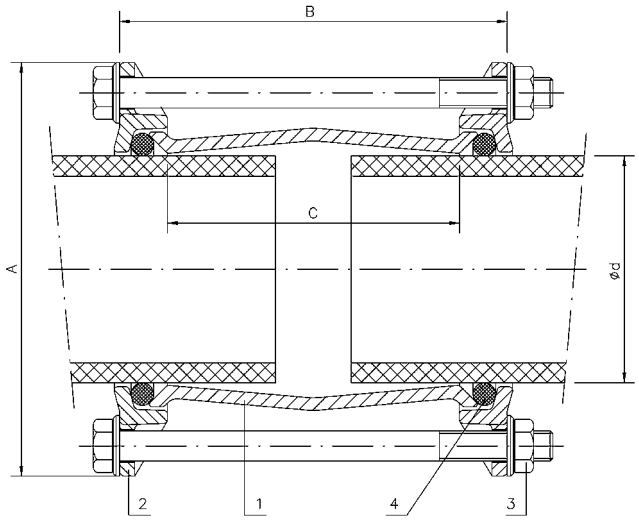

PART	DESCRIPTION	MATERIAL
1	COUPLING	GGG-50
2	COUNTERFLANGE	GGG-50
3	BOLT / NUTS	Steel 6.8 GEOMET
4	GASKET	EPDM

Telescopic dismantling joint Series 1020

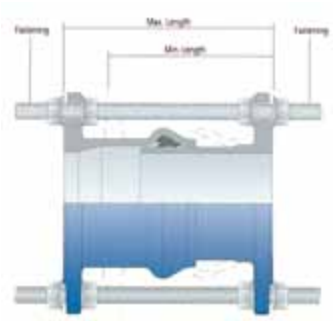

Technical specifications

- Use: in rigid installations where it may be necessary to dismantle any mechanism (valves, meters, pumps,...)
- Can be used as expansion joint.
- Nodular cast iron. **GGG-50 QUALITY.**
- EPDM gasket.
- Flanges suitable for PN-10 and PN-16.

REF.	pipe ND	Max. Leng-th	Min. Length	Nº Fastenings	Fastenings	Weight
1021	40	180	140	4	M16x270	6
1022	50	180	140	4	M16x270	7
1023	65	190	160	4	M16x280	9
1024	80	195	155	4	M16x280	11
1025	100	205	165	4	M16x280	13
1026	125	250	210	4	M16x350	20
1027	150	265	215	4	M20x380	23
1028	200	315	255	4	M20x440	36
1029	250	385	310	4	M24x530	59
1030	300	345	285	4	M24x500	70
1031	350	405	325	4	M24x560	91
1032	400	430	355	4	M27x590	112
1033	500	490	390	4	M30/650	166

Following data refers to DN600 and bigger sizes, PN10/16 (PN25 upon request).

Bigger sizes and pressures upon request.

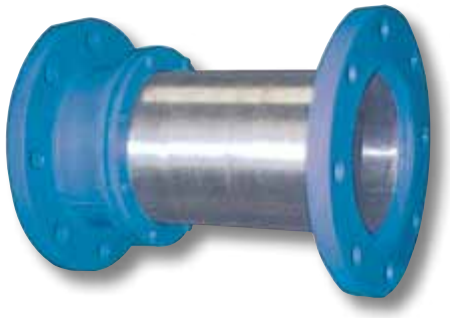

PART	DESCRIPTION	STANDARD MATERIAL
1	Exterior hoop	AISI-304
2	Interior hoop	AISI-304
3	FLANGES	Carbon steel
4	Clamping flanges	Carbon steel
5	Gasket	Neoprene
6	Bolts and nuts	Zinc coated steel

DN	L	PN-10						PN-16					
		TOL.	• D	• K	• L	Nº Tal	b	TOL.	• D	• K	• L	Nº Tal	b
600	300	±50	780	725	30	20	28	±50	840	770	36	20	36
700		±50	895	840	30	24	39	±50	910	840	36	24	36
750		±50	965	900	33	24	30	±50	970	900	36	24	36
800		±50	1015	950	33	24	32	±50	1025	950	39	24	38
900		±50	1115	1050	33	28	34	±50	1125	1050	39	28	40
1000		±50	1230	1160	36	28	34	±50	1255	1170	42	28	42
1100	300	±50	1340	1270	36	28	34	±50	1355	1270	42	32	42
1200		±50	1455	1380	39	32	38	±50	1485	1390	48	32	48
1300		±50	1575	1490	42	32	38	±50	1585	1490	48	32	48
1400		±50	1675	1590	42	36	42	±50	1685	1590	48	36	52
1500		±50	1785	1700	42	36	42	±50	1820	1710	56	36	52
1600		±50	1915	1820	48	40	46	±50	1930	1820	56	40	58
1700		±50	2015	1920	48	40	48	±50	2030	1920	56	44	60
1800		±50	2115	2020	48	44	50	±50	2130	2020	56	44	62
2000		±50	2325	2230	48	48	54	±50	2345	2230	62	48	66

Socket flange coupling for PVC pipes. Series 1050

Belgicast

Technical specifications

- Nodular cast iron, GGG-50 quality, with EPOXY coating with minimum thickness of 150 microns.
- PN-10 and PN-16 operating pressure.
- Equipped with geomet bolts, nuts (M12) and EPDM rubber seals.
- Range of Nominal Flange diameters from DN-32 to DN-600 and outer pipe diameters from 40 to 630 mm.
- Angular deflection +/- 2°.

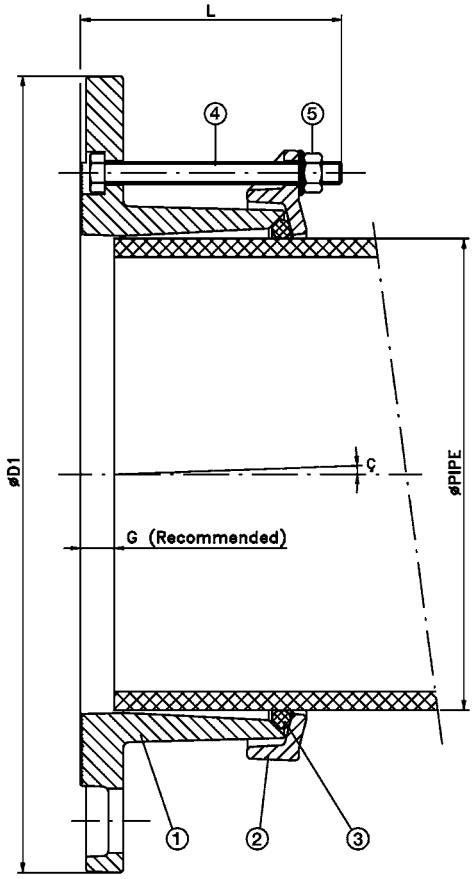

REF.	DN	PN	Pipe	D1	L	G Rec.	Bolting				Kg
							Units	Bolt DIN 933	Nut DIN 934	Washer DIN 125	
1050	32-40	6-10-16	40	150	82	15	2	M12x70	M12	A13	2
1050-A	40-50	6-10-16	50	165	82	15	2	M12x70	M12	A13	2
1051	50-60-65	6-10-16	63	175	82	15	2	M12x70	M12	A13	2
1052	50-60-65	6-10-16	75	175	82	15	2	M12x70	M12	A13	2
1053	80	6-10-16	90	190	82	15	4	M12x70	M12	A13	3
1054	100	6-10-16	110	210	82	18	4	M12x70	M12	A13	3,5
1055	125	6-10-16	125	240	82	18	4	M12x70	M12	A13	4,5
1056	125	6-10-16	140	240	82	18	4	M12x70	M12	A13	4,5
1057	150	6-10-16	160	275	92	20	4	M12x80	M12	A13	5,5
1058	150	6-10-16	180	275	92	20	4	M12x80	M12	A13	6
1059	200	6-10-16	200	330	92	20	4	M12x80	M12	A13	7
1059-A	200	10-16	219,1	330	92	20	4	M12x80	M12	A13	7
1059-B	200	10-16	225	330	92	20	4	M12x80	M12	A13	9
1060	250	10-16	250	403	122	20	6	M12x110	M12	A13	16
1060-A	250	10-16	280	405	122	20	6	M12x110	M12	A13	16
1061	300	10-16	315	458	122	20	6	M12x110	M12	A13	18
1062	400	10-16	400	576	152	25	8	M12x140	M12	A13	28
1063	500	10-16	500	704	152	25	10	M12x140	M12	A13	35,5
1064	600	10-16	630	827	207	25	10	M20x210	M12	A13	60,7

- Bigger sizes upon request.

PART	DESCRIPTION	MATERIAL
1	FLANGE BODY	GGG-50
2	COUNTERFLANGE	GGG-50
3	GASKET	EPDM
4,5	BOLTING	Steel 6.8 GEOMET

"Major" / "Major Stop" Flange Adaptor

Common Features

- GGG-50 epoxy coated
- Angular deflection: +/-3°.
- Maximal working pressure: PN 16.
- Flanges drilling ISO PN 10/16.
- Temperatures: from 0°C to +60°C.
- Drinking water networks.

Applications

- Fire protection networks.
- Irrigation networks.

"Major" Flange Adaptor for Ductile Iron or PVC pipes

Enables the mechanical jointing of a flange and a pipe.

– Angular deflection up to 6°.

- Range: – From DN 40 to 400 for iron pipe.
  – From DN 50 to 400 for U-PVC and O-PVC pipes.

MAJOR for ductile iron pipes. Series C1 10

DN	OD mm	L mm	Weight kg
40	57	52	1.2
65 *	77	75	2.2
80	98	80	2.7
100	118	80	3.3
125	144	85	5.0
150	170	90	6.0
200 **	222	90	8.5
250 **	274	90	11.0
300 **	326	94	15.5
350 **	378	96	19.5
400 **	429	103	24.5

MAJOR for PVC pipes. Series C1 15

DN	OD mm	L mm	Weight kg
50 *	63	72	1.9
65 *	63	72	2.2
65 *	75	72	2.3
80	90	76	2.8
100	110	80	3.4
125	125	80	4.5
125	140	80	4.5
150	160	90	6.0
200 **	200	100	9.0
200 **	225	105	8.5
250 **	250	95	13.0
350 **	315	107	16.0
400 **	400	125	29.5

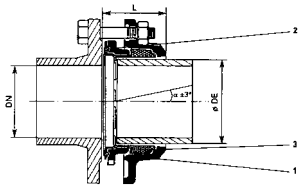

- Note:
  – This coupling does not resist to longitudinal forces and pipe pull out will occur. Ensure adequate restraint is provided.
  – Not recommended for PE pipes.

Item	Designation	Qté	Materials	Standards
1	Flange	1	Ductile iron / EN-GJS 450-10	EN 1563
2	Ring	1	Ductile iron / EN-GJS 450-10	EN 1563
3	Gasket	1	EPDM	EN 681-1

* Double drilling 60 and 65
** Double drilling ISO PN 10 and ISO PN 16

"Major Stop" Flange Adaptor for Ductile Iron, PVC or PE pipes

Enables self-locked mechanical jointing of a flange and a pipe.

Range: – From DN 50/65 to 200 for cast iron pipe.
– From DN 40 to 200 for U-PVC, O-PVC and PE (PE 80 or PE 100 PN 16) pipes.

MAJOR STOP for ductile iron Series C1 350

DN	OD mm	L mm	J mm	Weight kg
65*	77	75	13	2.6
80	98	80	13	3.0
100	118	80	13	3.6
125	144	85	13	4.6
150	170	90	13	6.0
200**	222	90	13	9.0

* Double drilling 60 and 65
** Double drilling ISO PN 10 and ISO PN 16

MAJOR STOP for PVC-PE pipes (PE 80 and PE 100 PN 16) - Series C1 35

DN	OD mm	L mm	J mm	Weight kg
40*	40	55	–	1.4
40	50	60	–	1.4
50	63	72	13	1.9
65**	63	72	13	2.2
65**	75	72	13	2.2
80	90	76	13	2.7
100	110	80	15	3.4
125	125	80	15	4.4
125	140	80	15	4.2
150	160	90	17	6.0
200***	200	100	17	9.5
200***	225	105	17	9.0

* Can be fitted an oval flange
** Double drilling 60 and 65
*** Double drilling ISO PN 10 and ISO PN 16

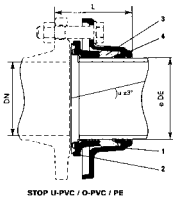

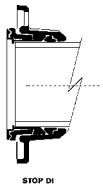

- Note:
  – This hardnessed coupling accommodates the end load due to the working pressure. It does not prevent from the magnitude of the pipe system.

Item	Designation	Qty	Materials	Standards
1	Flange	1	Ductile iron / EN-GJS 450-10	NF EN 1563
2	Ring	1	Ductile iron / EN-GJS 450-10	NF EN 1563
3	Gasket	1	EPDM	NF EN 681-1
4	Gripping ring	1	Brass*/CuZn40Pb1Al or Steel**/P3085	NF EN 12167

* for U-PVC, O-PVC and PE
** for ductile iron pipes

Universal coupling
Series 1200-L "Liberty"

Belgicast

Technical specifications

- Nodular cast iron, GGG-50 quality.
- EPOXY coating (150 microns).
- Enables pipes made of different materials and with different outside diameters to be joined.
- The lighter weight and easier handling of this range gives workers greater freedom of movement.
- Angular deflection +/- 6°.

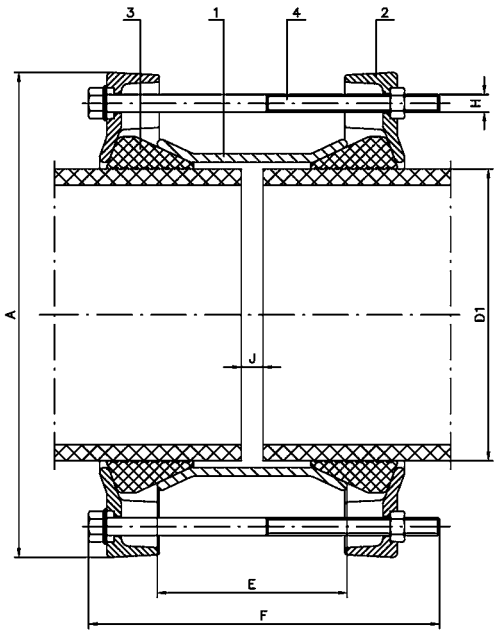

COMPONENTS			
	Name	Material	Coating
1	Centre Sleeve	GGG-50	EPOXY RAL-5015
2	End ring	GGG-50	EPOXY RAL-5015
3	Rubber seal	EPDM	
4	Bolts	Quality 6.8	GEOMET

REF.	D1 (Min)	D2 (Max)	E	F	A	J (Min)	J (Max)	H	Weight
1200-A / L	47	60	100	190	169	10	40	M12 x 180/90	2,8
1200 / L	57	72	106	210	195	10	45	M12 x 200/90	4,1
1201 / L	68	85	106	210	207	10	45	M12 x 200/90	4,4
1202 / L	84	106	106	210	224	10	45	M12 x 200/90	5,1
1203 / L	103	116	106	210	250	10	45	M12 x 200/90	6,7
1204 / L	108	130	106	230	250	10	45	M12 x 220/100	7,1
1205 / L	128	146	106	230	276	10	45	M12 x 220/100	7,7
1206 / L	134	155	106	230	276	10	45	M12 x 220/100	7,6
1207 / L	153	175	106	230	304	10	45	M12 x 220/100	8,6
1208 / L	165	185	106	230	304	10	45	M12 x 220/100	8,1
1209 / L	184	207	130	260	330	10	70	M12 x 250/130	10,7
1210 / L	208	225	130	260	348	10	70	M12 x 250/130	11,3
1210-A / L	218	236	150	260	359	10	90	M12 x 250/130	14,0
1211 / L	222	250	130	260	373	10	70	M12 x 250/130	12,2
1211-A / L	246	270	150	300	394	10	90	M12 x 290/130	17,1
1212 / L	264	284	130	260	407	10	70	M12 x 250/130	17,1
1212-A / L	282	306	150	300	433	10	90	M12 x 290/130	20,0
1213 / L	305	326	130	260	451	10	70	M12 x 250/130	20,5
1213-A / L	315	335	150	300	463	10	90	M12 x 290/130	23,1
1213-B / L	334	355	150	300	483	10	90	M12 x 290/130	22,5
1214 / L	360	386	130	260	510	10	70	M12 x 250/130	23,8
1214-A / L	386	410	150	300	538	10	90	M12 x 290/130	28,1
1215 / L	408	435	130	260	559	10	70	M12 x 250/130	28,0
1216 / L	425	448	150	300	584	10	90	M12 x 290/130	34,1
1216 / LE	438	458	150	300	584	10	90	M12 x 290/130	34,1
1217 / L	465	490	180	330	628	10	120	M12 x 320/130	39,6
1217 / LE	480	500	180	330	628	10	120	M12 x 320/130	39,6

MATERIAL: GGG-50
USE: Cast iron, steel, PVC-U / -BO, asbestos cement.

Eurocoup Coupling

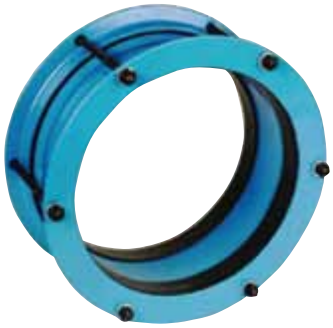

Technical specifications

- Available in PN10/16/25/40.
- Angular deflection +/- 6º.
- Resicoat RT9000 R4 Epoxy coated (blue Ral 5015).

For Ductile Iron pipe

DN	Size O.D.	Art. No.	L mm	D mm	Weight kg
500	532,0	C0160532F0000	235	627	28,5
600	635,0	C0160635F0000	235	730	34,0
700	738,0	C0160738F0000	230	838	48,9
800	842,0	C0160842F0000	230	942	54,9
900	945,0	C0160945F0000	230	1045	65,2
1000	1048,0	C0161048F0000	245	1161	73,7
1100	1152,0	C0161152F0000	245	1265	80,2
1200	1255,0	C0161255F0000	260	1368	87,3
1400	1462,0	C0161462F0000	260	1593	177,8
1500	1565,0	C0161565F0000	260	1696	189,4
1600	1668,0	C0161668F0000	260	1799	201,1

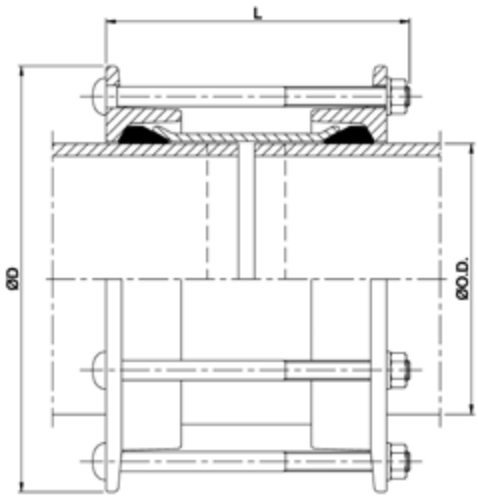

For steel pipe

DN	Size O.D.	Art. No.	L mm	D mm	Weight kg
500	508,0	C0160508F0000	235	603	27,4
600	609,6	C0160610F0000	235	705	32,7
700	711,2	C0160711F0000	230	811	47,3
800	812,8	C0160812F0000	230	913	53,2
900	914,4	C0160914F0000	230	1014	59,9
1000	1016,0	C0161016F0000	245	1129	70,9
1100	1118,0	C0161118F0000	245	1231	78,1
1200	1220,0	C0161220F0000	245	1333	85,2
1400	1420,0	C0161420F0000	260	1551	173,1
1500	1520,0	C0161520F0000	260	1651	186,1
1600	1620,0	C0161620F0000	260	1751	195,6

Bigger and different sizes on request.

COMPONENTS

	Description	Material	Coating
1	Body	S235JR EN10025	EPOXY RAL-5015
2	End ring	S275JR EN10025	EPOXY RAL-5015
3	Bolts	Steel	Hot dip galvanised
4	Rubber gaskets	EPDM	

Universal Flange
Series 2200-L "Liberty"

Technical specifications

- Nodular cast iron, GGG-50 quality.
- EPOXY coating (150 microns).
- Enables pipes made of different materials and with different outside diameters to be joined.
- Can be used as a dismantling joint.
- Suitable for ISO, DIN (PN-10/16), BS, ANSI 150 lb, BSTD.
- The lighter weight and easier handling of this range gives workers greater freedom of movement.
- Maximum working pressure 16 bar.
- Angular deflection +/-6°.

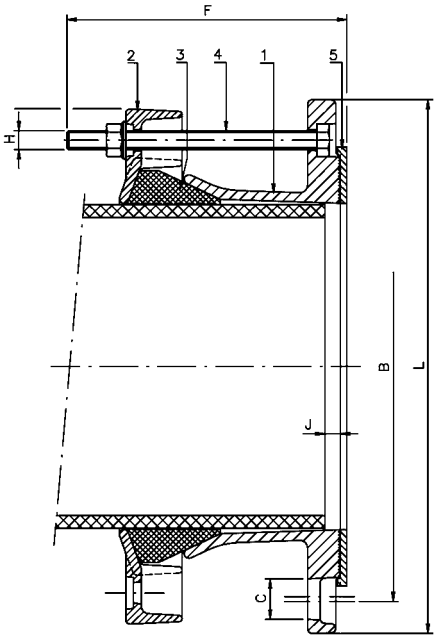

REF.	DN	D1 (Min)	D1 (Max)	L	B	C	F	J (Min)	J (Max)	H	Weight kg
2200-A / L	40 / 50	47	60	165	100/125	19	140	10	45	M12 x 130	4
2200 / L	50 / 65	57	72	194	114/147	19	140	10	55	M12 x 130	5
2201 / L	50 / 65	68	85	207	125/160	19	140	15	55	M12 x 130	6
2202 / L	65/ 80 / 100	84	106	224	146/190	19	140	10	55	M12 x 130	5,8
2203 / L	100 / 125	103	116	250	178/216	19	140	10	55	M12 x 130	7,8
2204 / L	100 / 125	108	130	250	178/216	19	150	10	55	M12 x 140	7
2205 / L	125 / 150	128	146	286	210/242	22	140	10	55	M12 x 130	9,6
2206 / L	125 / 150	134	155	286	210/242	22	150	10	55	M12 x 140	9,1
2207 / L	150 / 175 / 200	153	175	340	237/298	23	140	10	55	M12 x 130	10,7
2208 / L	150 / 175 / 200	165	185	340	237/298	23	150	10	55	M12 x 140	11,2
2209 / L	175 / 200	184	207	342	290/301	23	170	10	70	M12 x 160	13,6
2210 / L	200	208	225	348	295/301	23	170	10	70	M12 x 160	14,5
2210-A / L	200	218	236	348	295	23	170	15	70	M12 x 160	13,6
2211 / L	200	222	250	370	295	23	170	28	70	M12 x 160	14,6
2211-A / L	250	246	270	406	350/364	27	170	10	80	M12 x 160	18,4
2212 / L	250	264	284	406	350/364	27	170	10	70	M12 x 160	18,4
2212-A / L	250	282	306	435	355	26	190	28	80	M12 x 180	21,9
2213 / L	300	305	326	482	400/434	27	170	10	70	M12 x 160	23
2213-A / L	300	315	335	482	400/434	27	170	10	80	M12 x 160	27,4
2213-B / L	300	334	355	485	405/440	27	170	78	80	M12 x 160	28
2213-C / L	300	360	386	498	404/440	27	260	83	155	M12 x 250	36,4
2214 / L	350	360	386	533	460/479	27	170	10	70	M12 x 160	25
2214-A / L	350	386	410	540	470	26	190	10	80	M12 x 180	28,1
2215 / L	400	408	435	596	515/542	30	170	10	70	M12 x 160	28,3
2216 / L	400	425	448	596	515/542	30	190	10	80	M12 x 180	29,8
2216 / LE	400	438	458	596	515/542	30	190	10	80	M12 x 180	29,8
2217 / L	400	465	490	630	525/570	30	300	83	155	M12 x 290	44,3
2217 / LE	400	480	500	630	525/570	30	300	83	155	M12 x 290	44,3

• Bigger sizes upon request.

COMPONENTS			
	Name	Material	Coating
1	Centre sleeve	GGG-50	EPOXY RAL-5015
2	End ring	GGG-50	EPOXY RAL-5015
3	Bolts	Quality 6.8	GEOMET
4	Rubber seal	EPDM	
5	Flat gasket	EPDM	

Ref. 2211/L and above are supplied with flat joint.
Ref. 2214-A please specify PN10 or PN16

MATERIAL: GGG-50
USE: Cast iron, steel, PVC-U / -BO, asbestos cement.

Eurocoup Flange adapter

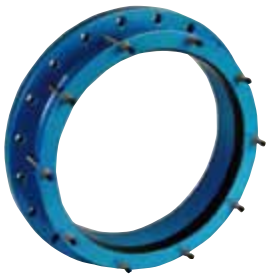

Technical specifications

- Available in PN10/16/25/40.
- Angular deflection +/- 3º.
- Resicoat RT9000 R4 Epoxy coated (blue Ral 5015).

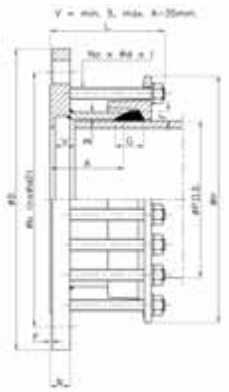

For Ductile Iron pipe

PN10

DN	Size O.D.	Art. No.	L mm	D mm	Weight kg
500	532,0	C0560532F0002	174	670	43,1
600	635,0	C0560635F0002	176	780	51,9
700	738,0	C0560738F0002	176	895	69,1
800	842,0	C0560842F0002	176	1015	89,8
900	945,0	C0560945F0002	176	1115	106,3
1000	1048,0	C0561048F0002	176	1230	121,2
1100	1152,0	C0561152F0002	176	1340	135,5
1200	1255,0	C0561255F0002	176	1455	165,9
1400	1462,0	C0561462F0002	180	1675	239,1
1500	1565,0	C0561565F0002	180	1785	260,8
1600	1668,0	C0561668F0002	184	1915	316,7

For Ductile Iron pipe

PN16

DN	Size O.D.	Art. No.	L mm	D mm	Weight kg
500	532,0	C0560532F0003	176	715	54,0
600	635,0	C0560635F0003	178	840	73,5
700	738,0	C0560738F0003	174	910	78,0
800	842,0	C0560842F0003	176	1025	95,5
900	945,0	C0560945F0003	178	1125	112,0
1000	1048,0	C0561048F0003	180	1255	141,6
1100	1152,0	C0561152F0003	180	1365	152,9
1200	1255,0	C0561255F0003	184	1485	194,8
1400	1462,0	C0561462F0003	188	1685	269,7
1500	1565,0	C0561565F0003	192	1820	330,3
1600	1668,0	C0561668F0003	194	1930	371,4

For steel pipe

PN10

DN	Size O.D.	Art. No.	L mm	D mm	Weight kg
500	508,0	C0560508F0002	174	670	42,3
600	610,0	C0560610F0002	176	780	51,0
700	711,0	C0560711F0002	176	895	68,0
800	813,0	C0560812F0002	176	1015	88,6
900	914,0	C0560914F0002	176	1115	98,4
1000	1016,0	C0561016F0002	176	1230	119,7
1100	1118,0	C0561118F0002	176	1340	133,9
1200	1220,0	C0561220F0002	176	1455	164,3
1400	1420,0	C0561420F0002	180	1675	236,6
1500	1520,0	C0561520F0002	180	1785	258,1
1600	1620,0	C0561620F0002	184	1915	313,8

Bigger and different sizes on request.

PN16

DN	Size O.D.	Art. No.	L mm	D mm	Weight kg
500	508,0	C0560508F0003	176	715	53,5
600	609,6	C0560610F0003	178	840	70,7
700	711,2	C0560711F0003	174	910	76,9
800	812,8	C0560812F0003	176	1025	94,8
900	914,0	C0560914F0003	178	1125	109,3
1000	1016,0	C0561016F0003	180	1255	140,3
1100	1118,0	C0561118F0003	180	1365	152,9
1200	1220,0	C0561220F0003	184	1485	193,4
1400	1420,0	C0561420F0003	188	1685	167.3
1500	1520,0	C0561520F0003	192	1820	327,7
1600	1620,0	C0561620F0003	194	1930	368,7

COMPONENTS

	Description	Material	Coating
1	Flange	S235JR EN10025	EPOXY RAL-5015
2	End ring	S275JR EN10025	EPOXY RAL-5015
3	Bolts	Steel	Hot dip galvanised
4	Rubber gaskets	EPDM	

Coupling and Flange adapter for PE pipes

Technical specifications

This NEW GENERATION OF COUPLINGS for PE pipes is equipped with two very important functional parts: the leakproof lip seal and the gasket with inserts to adhere to the pipe.

- **Leakproof lip seal**

  It works by means of a compression lip and is fitted to the hub by the manufacturer. The **"main lip"** acts on the sections of the compression lips.
  The **"front and rear lips"** secure the seal in its place in the hub and absorb any acceptable variation in the housing. When pipes are joined, the rubber of the seal is compressed, producing pressure which acts on the plug and hub (see shaded areas of the illustration below), making them completely leakproof.

- **Gasket with metal inserts**

  This was designed by us to obtain a maximum adhesion with the least possible weakening of the pipe. Another advantage of this insert system is that it means that the outer fibres are only cut on **1/3 of the perimeter** of the pipe, unlike other systems which act on the whole pipe perimeter, breaking fibres all around it and thereby weakening it.

- The dimensions of the flange adapter are according to DIN-28605.
- The inner diameter coincides with the nominal diameter of the flange adapter, thereby providing the interior stop for the pipe.
- Standard parts are the same for PN10 and PN16.
- Can be supplied in ANSI-150 upon request.
- Can be used with all types of valves: butterfly, gate,...
- Specially designed for applications with different fluids and gas, depending on the seal material.
  For water: EPDM, as per UNE EN 681/1
  For gas: NBR, as per UNE EN 549
- Extensive test as per DIN-3387 have been carried out, thus guaranteeing that the flange adapters are leakproof.
  Working pressure: 4 bar for gas, 16 bar for water.
  Test pressure: 6 bar for gas, 24 bar for water.
- Antitraction tests according to VP-600.

MATERIAL: GGG-50
USE: PE and PVC pipes

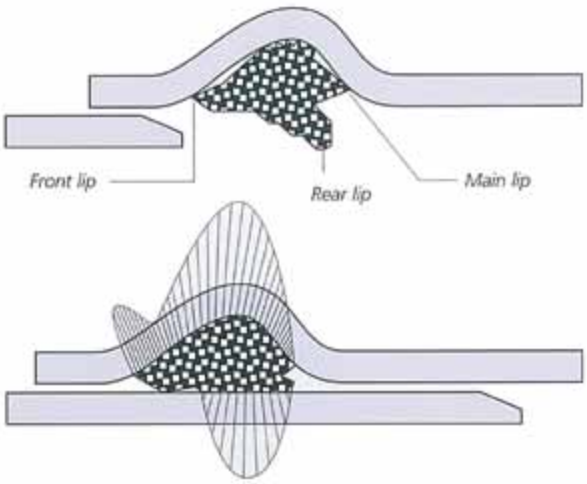

Coupling for PE pipes Series 1.800

Component	Material	Coating
Body	Nodular cast iron GGG-50	EPOXY
End Ring	Nodular cast iron GGG-50	EPOXY
Bolts	6.8 Steel	GEOMET
Grip ring	STEEL - EPDM	Bichrom.
Gasket	EPDM	

REF.	Ø Pipe	Screw	Quantity	Weight
1800	60,3	M10x60	4	4,3
1800-A	63	M10x60	4	4,7
1801-A	75	M10x60	8	5,4
1803	90	M10x60	8	6,6
1804	110	M10x60	8	7,4
1804-A	125	M10x60	8	8,0
1805-A	140	M12x75	8	10,0
1806	160	M12x75	8	11,6
1806-A	180	M12x75	8	12,9
1807	200	M12x75	12	16,4
1807-A	225	M12x75	12	20,0
1808	250	M12x75	12	23,2
1808-A	280	M12x75	12	27,4
1809	315	M12x75	12	32,0

Flange adapter for PE pipes Series 2.800

Component	Material	Coating
Flange	Nodular cast iron GGG-50	EPOXY
End Ring	Nodular cast iron GGG-50	EPOXY
Bolts	6.8 Steel	GEOMET
Grip ring	STEEL - EPDM	Bichrom.
Gasket	EPDM	

REF.	DN	Ø Pipe	Screw	Quantity	Weight
2800	50	60,3	M10x60	2	4,3
2800-A	50	63	M10x60	2	4,5
2801	60	63	M10x60	2	4,4
2802	60/65	75	M10x60	4	5,5
2803	80	90	M10x60	4	6,4
2804	100	110	M10x60	4	7,4
2804-A	100	125	M10x60	4	7,8
2805	125	125	M10x60	4	8,2
2805-A	125	140	M12x75	4	10,2
2806	150	160	M12x75	4	13,6
2806-A	150	180	M12x75	4	14,1
2807	200	200	M12x75	6	19,7
2807-A	200	225	M12x75	6	20,3
2808	250	250	M12x75	6	26,6
2808-A	250	280	M12x75	6	26,2
2809	300	315	M12x75	6	32,9

Multidiameter coupling Series 3100

Belgicast

Technical specifications

- The LEYA MULTIDIAMETER COUPLING is a product with a wide range of diameters covering pipes from OD40 to **845** milimetres.
- Up to **43** milimetres tolerance.
- It is one of the most versatile products on the market specially for sizes above 400 mm. Suitable for joining pipes made of different rigid materials, such as cast iron, steel, PVC, asbestos cement, etc...
- Maximum acceptable angular deflection of **+/-10**°.
- Specially designed for applications with different fluids, depending on the seal material.
  For water: EPDM, as per UNE EN 681/1.
  For gas: NBR, as per UNE EN 549.
- Extensive tests according to DIN-3387 have been carried out to guarantee that the flange adapters are leakproof.
  Working pressure: 4 bar for gas, 16 bar for water
  Test pressure: 6 bar for gas, 24 bar for water.

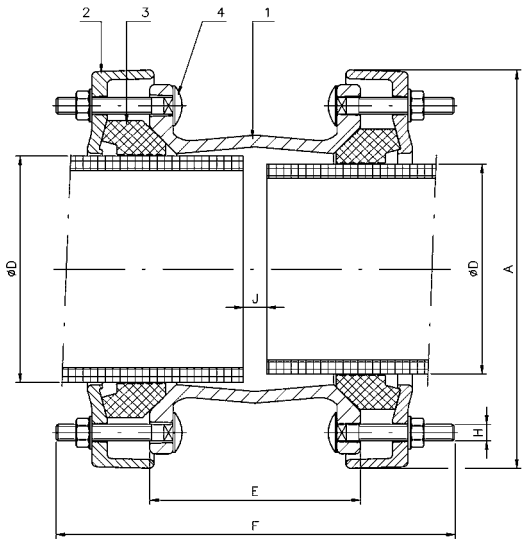

	Elements	Material	Coating
1	Body	Nodular cast iron GGG-50	EPOXY
2	End Ring	Nodular cast iron GGG-50	EPOXY
3	Gasket	EPDM	
4	Bolts	Quality 8.8	GEOMET

REF.	DN	D	E	F	H	A	J Min	J Max	Weight kg
3101	50	40-75	145	280	6-M14 x 80	215	20	75	8,90
3102	60/65	60-95	145	300	8-M14 x 80	235	20	75	11,35
3103	80	80-115	145	300	8-M14 x 80	260	20	75	14,35
3104	100	105-135	145	300	8-M14 x 80	280	20	75	15,80
3105	125	130-165	180	340	8-M14 x 100	310	20	110	19,70
3106	150	155-195	180	340	8-M14 x 100	340	20	110	24.10
3107	175	190-230	180	340	8-M14 x 100	375	20	110	28,00
3108	200	215-258	180	340	12-M14 x 100	400	20	110	32,30
3109	225	240-280	200	360	12-M16 x 100	425	20	130	35,20
3110	250	235-275	200	360	12-M16 x 100	420	20	130	36,00
3110-A	250	270-310	200	360	12-M16 x 100	455	20	130	39,10
3111	300	310-350	200	370	12-M16 x 100	495	20	130	45,05
3111-A	300	350-390	200	370	12-M16 x 100	535	20	130	48,00
3112-A	350	395-435	200	370	12-M16 x 100	580	20	130	50,00
3113-A	400	435-470	200	370	12-M16 x 100	615	20	130	54,50
3113-B	400	470-505	200	370	12-M16 x 100	650	20	130	61,25
3115	500	505-540	200	370	20-M16 x 100	685	20	130	66,80
3115-A	500	540-575	200	370	20-M16 x 100	720	20	130	65,00
3115-B	500	575-610	200	370	20-M16 x 100	755	20	130	71,00
3116	600	610-645	200	370	20-M16 x 100	790	20	130	74,05
3116-A	600	645-680	200	370	20-M16 x 100	825	20	130	76,50
3116-B	600	680-715	200	370	20-M16 x 100	860	20	130	82,50
3117	700	710-745	200	370	24-M16 x 100	890	20	130	89,00
3118	800	810-845	200	370	24-M16 x 100	990	20	130	92,00

MATERIAL: GGG-50
USE: Cast iron, steel, PVC-U / -BO, spigot ends.

Multidiameter flange adapter Series 3200

Technical specifications

- The MULTIDIAMETER FLANGE ADAPTER WITH STOP is a product with a wide range of diameters covering pipes from OD 40 to **845** mm.
- Up to **43** mm. tolerance.
- It is one of the most versatile products on the market specially for sizes above 400 mm. Suitable for joining pipes made of different rigid materials, such as cast iron, steel, PVC, asbestos cement, etc...
- Maximum acceptable angular deflection of **+/-10**°.
- Flange adapter dimensions according to DIN-28605.
- Full bore.
- Standard parts are the same for PN10 and PN16.
- Can be supplied in ANSI-150 on request.
- Can be used with all types of valves: butterfly, gate,...
- Specially designed for applications with diferent fluids depending on the seal material:
  For water: EPDM, as per UNE EN 681/1
  For gas: NBR, as per UNE EN 549
- Extensive test according to DIN-3387 have been carried out to guarantee that the flange adapters are leakproof. Working pressure: 4 bar for gas, 16 bar for water
  Test pressure: 6 bar for gas, 24 bar for water.

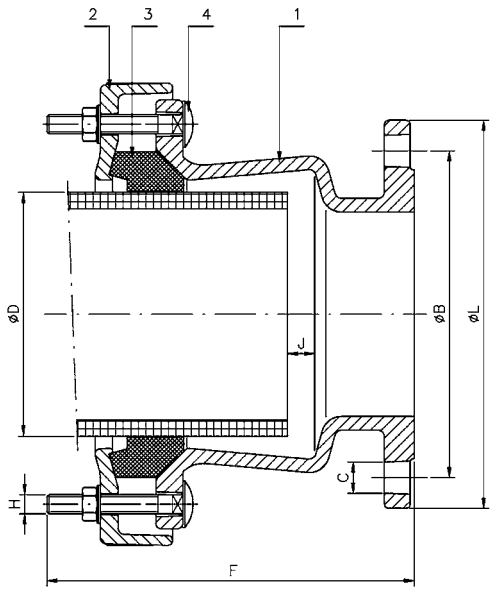

	Elements	Material	Coating
1	Flange	Nodular cast iron GGG-50	EPOXY
2	End Ring	Nodular cast iron GGG-50	EPOXY
3	Gasket	EPDM	
4	Bolts	Quality 8.8	GEOMET

REF.	DN	D	L	B	C	F	J Max	H	Weight kg
3201	50	40-75	165	125	18	200	55	3-M14 x 80	7,85
3202	60/65	60-95	185	135/145	18	200	60	4-M14 x 80	9,40
3203	80	80-115	200	160	18	240	80	4-M14 x 80	13,25
3204	100	105-135	220	180	18	240	80	4-M14 x 80	14,35
3205	125	130-165	250	210	18	270	80	4-M14 x 100	19,50
3206	150	155-195	285	240	23	270	80	4-M14 x 100	23,65
3207	175	190-230	315	270	23	270	80	4-M14 x 100	26,70
3208	200	215-258	340	295	23	270	80	6-M14 x 100	32,40
3209	225	240-280	370	325	23	285	95	6-M16 x 100	36,55
3210	250	235-275	405	355	28	285	95	6-M16 x 100	35,20
3210-A	250	270-310	405	355	27	285	95	6-M16 x 100	40,50
3211	300	310-350	460	400/410	23/27	285	95	6-M16 x 100	48,00
3211-A	300	350-390	460	400/410	23/27	315	85	6-M16 x 100	53,00
3212	350	350-390	520	460/470	23/27	285	95	6-M16 x 100	56,20
3212-A	350	395-435	520	460/470	23/27	315	95	6-M16 x 100	63,65
3213	400	400-435	580	515/525	27/30	295	95	6-M16 x 100	59,65
3213-A	400	435-470	580	515/525	27/30	325	95	6-M16 x 100	70,50
3213-B	400	470-505	580	515/525	27/30	335	95	6-M16 x 100	76,75
3214	450	455-490	640	565/585	27/30	295	95	6-M16 x 100	72,75
3214-A	450	490-525	640	565/585	27/30	295	95	6-M16 x 100	73,00
3215	500	505-540	715	620/650	27/33	245	110	10-M16 x 100	67,75
3215-A	500	540-575	715	620/650	27/33	320	95	10-M16 x 100	90,50
3215-B	500	575-610	715	620/650	27/33	320	95	10-M16 x 100	94,50
3216	600	610-645	840	725/770	30/36	245	110	10-M16 x 100	85,75
3216-A	600	645-680	840	725/770	30/36	325	95	10-M16 x 100	116,50
3216-B	600	680-715	840	725/770	30/36	325	95	10-M16 x 100	119,50
3217	700	710-745	910	840	36	246	110	12-M16 x 100	85,50
3218	800	810-845	1025	950	39	246	110	12-M16 x 100	101,00

MATERIAL: GGG-50
USE: Cast iron, steel, PVC-U / -BO, asbestos cement.

Universal stepped Coupling Series 1500

Belgicast

Technical specifications

- Manufactured in GGG 50, epoxy coated.
- The locking joint for water EPDM (UNE EN 681/1). For gas NBR (UNE EN 549).
- Nuts and bolts: steel 6.8 + Geomet.
- Angular deflection +/- 6°.

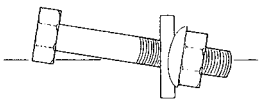

DETAIL: CONVEX AND CONCAVE WASHER

The instalation is technically perfect. The coupling of the nut is smoother and lighter, at the same time absorbs any disalignment of the struts that connect the 2 counter-flanges.

MATERIAL: GGG-50
USE: Cast iron, steel, PVC-U / -BO, asbestos cement.

REF.	Ø Exterior Tubes		Equivalency Universal Joint LEYA
	A	B	
1500	57 - 72	68 - 85	1200 / 1201
1501	57 - 72	85 - 102	1200 / 1202
1502	65 - 85	85 - 102	1201 / 1202
1503	68 - 85	103 - 116	1201 / 1203
1504	85 - 102	103 - 116	1202 / 1203
1505	85 - 102	108 - 128	1202 / 1204
1506	85 - 102	128 - 146	1202 / 1205
1507	103 - 116	108 - 128	1203 / 1204
1508	103 - 116	128 - 146	1203 / 1205
1509	103 - 116	134 - 154	1203 / 1206
1510	108 - 128	128 - 146	1204 / 1205
1511	108 - 128	134 - 154	1204 / 1206
1512	108 - 128	154 - 175	1204 / 1207
1513	128 - 146	134 - 154	1205 / 1206
1514	128 - 146	154 - 175	1205 / 1207
1515	128 - 146	165 - 182	1205 / 1208
1516	134 - 154	154 - 175	1206 / 1207
1517	134 - 154	165 - 182	1206 / 1208
1518	154 - 175	165 - 182	1207 / 1208
1519	154 - 175	185 - 207	1207 / 1209
1520	165 - 182	185 - 207	1208 / 1209
1521	165 - 182	208 - 225	1208 / 1210
1521-A	165 - 182	218 - 236	1208 / 1210-A
1522	184 - 207	208 - 225	1209 / 1210
1523	184 - 207	225 - 250	1209 / 1211
1524	208 - 225	225 - 250	1210 / 1211
1525	208 - 225	246 - 266	1210 / 1211-A

REF.	Ø Exterior Tubes		Equivalency Universal Joint LEYA
	A	B	
1526	225 - 250	246 - 266	1211 / 1211-A
1527	225 - 250	264 - 284	1211 / 1212
1527	222 - 250	282 - 302	1211 / 1212-A
1528	246 - 266	264 - 284	1211-A / 1212
1529	246 - 266	282 - 302	1211-A / 1212-A
1530	246 - 266	305 - 326	1211-A / 1213
1531	264 - 284	282 - 302	1212 / 1212-A
1532	264 - 284	305 - 326	1212 / 1213
1533	264 - 284	315 - 335	1212 / 1213-A
1534	282 - 302	305 - 326	1212-A / 1213
1535	282 - 302	315 - 335	1212-A / 1213-A
1536	282 - 302	334 - 355	1212-A / 1213-B
1537	305 - 326	315 - 335	1213 / 1213-A
1538	305 - 326	334 - 355	1213 / 1213-B
1539	305 - 326	360 - 386	1213 / 1214
1540	315 - 335	334 - 355	1213-A / 1213-B
1541	315 - 335	360 - 386	1213 / 1214
1542	334 - 355	360 - 386	1213-B / 1214
1544	360 - 386	386 - 410	1214 / 1214-A
1545	360 - 386	408 - 435	1214 / 1215
1546	360 - 386	425 - 448	1214 / 1216
1546-E	360 - 386	438 - 458	1214 / 1216-E
1547	386 - 410	408 - 435	1214-A / 1215
1548	386 - 410	425 - 448	1214-A / 1216
1548-E	386 - 410	438 - 458	1214-A / 1216-E
1549	408 - 435	425 - 448	1215 / 1216
1549-E	408 - 435	438 - 458	1215 / 1216-E
1550	408 - 435	465 - 490	1215 / 1217
1550-E	408 - 435	480 - 500	1215 / 1217-E
1551	425 - 458	465 - 490	1216 / 1217
1551-B	425 - 448	480 - 500	1216 / 1217-E
1551-A	438 - 458	465 - 490	1216-E / 1217
1551-E	438 - 458	480 - 500	1216-E / 1217-E

Belgicast

High Tolerance stepped Coupling. Series 3500

Technical specifications

- Wide range of diameters, **between 40 and 845 mm**, covering all the standard pipes on the market.
- **Tolerance of up to 235 mm between maximum and minimum diameter.**
- Independent clamping on both sides of the part.
- **Angular deflection +/-10°.**

Denomination	Material	Coating
Body	GGG-50	EPOXY
End Ring	GGG-50	EPOXY
Bolts	Quality 8.8	GEOMET
Gasket	EPDM	

MATERIAL: GGG-50
USE: Cast iron, steel, PVC-U / -BO, asbestos cement.

REF.	Tolerance Side A - Side B	Multidiam. Coupling equiv.	Weight
3501	(40/75) - (60/95)	3101 / 3102	10
3502	(40/75) - (80/115)	3101 / 3103	10,9
3503	(40/75) - (105/135)	3101 / 3104	11,7
3504	(40/75) - (130/165)	3101 / 3105	13,5
3505	(60/95) - (80/115)	3102 / 3103	12,6
3506	(60/95) - (105/135)	3102 / 3104	13,3
3507	(60/95) - (130/165)	3102 / 3105	15,3
3508	(60/95) - (155/195)	3102 / 3106	16,9
3509	(80/115) - (105/135)	3103 / 3104	14,2
3510	(80/115) - (130/165)	3103 / 3105	16,3
3511	(80/115) - (155/195)	3103 / 3106	17,7
3512	(80/115) - (190/230)	3103 / 3107	19,2
3513	(105/135) - (130/165)	3104 / 3105	17
3514	(105/135) - (155/195)	3104 / 3106	18,4
3515	(105/135) - (190/230)	3104 / 3107	20
3516	(105/135) - (215-258)	3104 / 3108	22
3517	(130/165) - (155/195)	3105 / 3106	19,4
3518	(130/165) - (190/230)	3105 / 3107	20,9
3519	(130/165) - (215/258)	3105 / 3108	23
3520	(130/165) - (240/280)	3105 / 3109	24,2
3521	(155/195) - (190/230)	3106 / 3107	22,3
3522	(155/195) - (215/258)	3106 / 3108	23,9
3523	(155/195) - (240/280)	3106 / 3109	25,9
3524	(155/195) - (270/310)	3106 / 3110-A	27,3
3525	(190/230) - (215/258)	3107 / 3108	26,5
3526	(190/230) - (240/280)	3107 / 3109	28,8
3527	(190/230) - (270/230)	3107 / 3110-A	30,4
3528	(190/230) - (310/350)	3107 / 3111	33,9
3529	(215/258) - (240/280)	3108 / 3109	30,2
3530	(215/258) - (279/310)	3108 / 3110-A	31,8
3531	(215/258) - (310/350)	3108 / 3111	35,3
3532	(215/258) - (350/390)	3108 / 3111-A	37,9
3533	(240/280) - (270/310)	3109 / 3110-A	33,3
3534	(240/280) - (310/350)	3109 / 3111	35,8
3535	(240/280) - (350/390)	3109 / 3111-A	38,4
3536	(240/280) - (395/435)	3109 / 3112-A	41,3
3537	(270/310) - (310/350)	3110-A / 3111	36,2
3538	(270/310) - (350/390)	3110-A / 3111-A	38,8
3539	(270/310) - (395/435)	3110-A / 3112-A	41,8
3540	(270/310) - (435/470)	3110-A / 3113-A	44,1
3541	(310/350) - (350/390)	3110 / 3111-A	40,6
3542	(310/350) - (395/435)	3111 / 3112-A	43,6

REF.	Tolerance Side A - Side B	Multidiam. Coupling equiv.	Weight
3543	(310/350) - (435/470)	3111 / 3113-A	45,9
3544	(310/350) - (470/505)	3111 / 3113-B	48,4
3545	(350/390) - (395/435)	3111 / 3112-A	44,7
3546	(350/390) - (435/470)	3111-A / 3113-A	47,1
3547	(350/390) - (470/505)	3111-A / 3113-B	49,6
3548	(350/390) - (505/540)	3111-A / 3115	53,5
3549	(395/435) - (435/470)	3112-A / 3113-A	47,6
3550	(395/435) - (470/505)	3112-A / 3113-B	50,1
3551	(395/435) - (505/540)	3112-A / 3115	54
3552	(395/435) - (540/575)	3112-A / 3115-A	55,3
3553	(395/435) - (575/610)	3112-A / 3115-B	58
3554	(435/470) - (470/505)	3113-A / 3113-B	50,9
3555	(435/470) - (505/540)	3113-A / 3115	54,8
3556	(435/470) - (540/575)	3113-A / 3115-A	56,1
3557	(435/470) - (575/610)	3113-A / 3115-B	58,8
3558	(435/470) - (610/645)	3113-A / 3116	63
3559	(470/505) - (505/540)	3113-B / 3115	55,6
3560	(470/505) - (540/575)	3113-B / 3115-A	56,9
3561	(470/505) - (575/610)	3113-B / 3115-B	59,8
3562	(470/505) - (610/645)	3113-B / 3116	63,8
3563	(505/540) - (540/575)	3115 / 3115-A	59,4
3564	(505/540) - (575/610)	3115 / 3115-B	62,2
3565	(505/540) - (610/645)	3115 / 3116	66,4
3566	(505/540) - (645/680)	3115 / 3116-A	68,6
3567	(540/575) - (575/610)	3115-A / 3115-B	68,1
3568	(540/575) - (610/645)	3115-A / 3116	72,1
3569	(540/575) - (645/680)	3115-A / 3116-A	74,8
3570	(540/575) - (680/715)	3115-A / 3116-B	77,1
3571	(575/610) - (610/645)	3115-B / 3116	73
3572	(575/610) - (645/680)	3115-B / 3116-A	74,7
3573	(575/610) - (680/715)	3115-B / 3116-B	76,7
3574	(575/610) - (710/745)	3115-B / 3117	79,2
3575	(610/645) - (645/680)	3116 / 3116-A	76,73
3575	(610/645) - (680/715)	3116 / 3116-B	78
3577	(610/645) - (710/745)	3116 / 3117	81
3578	(610/645) - (810/845)	3116 / 3118	91,8
3579	(645/680) - (680/715)	3116-A / 3116-B	78,1
3580	(645/680) - (710/745)	3116-A / 3117	80,9
3581	(645/680) - (810/845)	3116-A / 3118	91,6
3582	(680/715) - (710/745)	3116-B / 3117	80,4
3583	(680/715) - (810/845)	3116-B / 3118	88,5
3584	(710/745) - (810/845)	3117 / 3118	89,9

Fittings for PVC
Series 4000

Belgicast

SERIE-4000 E-KS

Réf.	DN	ød	A	L	P (Kg)
[illegible]	[illegible]	[illegible]	[illegible]	[illegible]	[illegible]

SERIE-4025 F-KS

Réf.	DN	ød	A	L	P (Kg)
[illegible]	[illegible]	[illegible]	[illegible]	[illegible]	[illegible]

SERIE-4075 MMI-KS

Réf.	ød1	ød2	A	L1	H	L2	P (Kg)
[illegible]	[illegible]	[illegible]	[illegible]	[illegible]	[illegible]	[illegible]	[illegible]

SERIE-4100 MMI-KS

REF.	ød	R	A	L	H	P (Kg)
[illegible]	[illegible]	[illegible]	[illegible]	[illegible]	[illegible]	[illegible]

SERIE-4175 MMQ-KS

DOUBLE SOCKET 90° BEND

REF.	ød	L	H	P (Kg)
[illegible]	[illegible]	[illegible]	[illegible]	[illegible]

SERIE-4125 MMQQ-KS

ALL SOCKET CROSSES

REF.	ød	A	L	P (Kg)
[illegible]	[illegible]	[illegible]	[illegible]	[illegible]

SERIE-4200 MMK-KS

SOCKET 11.25° BEND

REF.	ød	L	H	P (Kg)
4201	[illegible]	[illegible]	[illegible]	[illegible]
4202	[illegible]	[illegible]	[illegible]	[illegible]
4203	[illegible]	[illegible]	[illegible]	[illegible]
4204	[illegible]	[illegible]	[illegible]	[illegible]
4205	[illegible]	[illegible]	[illegible]	[illegible]
4206	[illegible]	[illegible]	[illegible]	[illegible]
4207	[illegible]	[illegible]	[illegible]	[illegible]
4208	[illegible]	[illegible]	[illegible]	[illegible]
4209	[illegible]	[illegible]	[illegible]	[illegible]
4210	[illegible]	[illegible]	[illegible]	[illegible]
4211	[illegible]	[illegible]	[illegible]	[illegible]
4212	[illegible]	[illegible]	[illegible]	[illegible]
4213	[illegible]	[illegible]	[illegible]	[illegible]
4214	[illegible]	[illegible]	[illegible]	[illegible]
4215	[illegible]	[illegible]	[illegible]	[illegible]
4216	[illegible]	[illegible]	[illegible]	[illegible]
4217	[illegible]	[illegible]	[illegible]	[illegible]

SERIE-4225 MMK-KS

DOUBLE SOCKET 22.5° BEND

REF.	ød	L	H	P (Kg)
4226	[illegible]	[illegible]	[illegible]	[illegible]
4227	[illegible]	[illegible]	[illegible]	[illegible]
4228	[illegible]	[illegible]	[illegible]	[illegible]
4229	[illegible]	[illegible]	[illegible]	[illegible]
4230	[illegible]	[illegible]	[illegible]	[illegible]
4231	[illegible]	[illegible]	[illegible]	[illegible]
4232	[illegible]	[illegible]	[illegible]	[illegible]
4233	[illegible]	[illegible]	[illegible]	[illegible]
4234	[illegible]	[illegible]	[illegible]	[illegible]
4235	[illegible]	[illegible]	[illegible]	[illegible]
4236	[illegible]	[illegible]	[illegible]	[illegible]
4237	[illegible]	[illegible]	[illegible]	[illegible]
4238	[illegible]	[illegible]	[illegible]	[illegible]
4239	[illegible]	[illegible]	[illegible]	[illegible]
4240	[illegible]	[illegible]	[illegible]	[illegible]
4241	[illegible]	[illegible]	[illegible]	[illegible]
4242	[illegible]	[illegible]	[illegible]	[illegible]

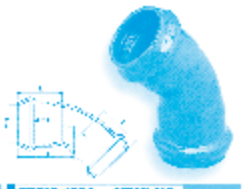

SERIE-4250 MMK-KS

DOUBLE SOCKET 45° BEND

REF.	ød	L	H	P (Kg)
4251	[illegible]	[illegible]	[illegible]	[illegible]
4252	[illegible]	[illegible]	[illegible]	[illegible]
4253	[illegible]	[illegible]	[illegible]	[illegible]
4254	[illegible]	[illegible]	[illegible]	[illegible]
4255	[illegible]	[illegible]	[illegible]	[illegible]
4256	[illegible]	[illegible]	[illegible]	[illegible]
4257	[illegible]	[illegible]	[illegible]	[illegible]
4258	[illegible]	[illegible]	[illegible]	[illegible]
4259	[illegible]	[illegible]	[illegible]	[illegible]
4260	[illegible]	[illegible]	[illegible]	[illegible]
4261	[illegible]	[illegible]	[illegible]	[illegible]
4262	[illegible]	[illegible]	[illegible]	[illegible]
4263	[illegible]	[illegible]	[illegible]	[illegible]
4264	[illegible]	[illegible]	[illegible]	[illegible]
4265	[illegible]	[illegible]	[illegible]	[illegible]
4266	[illegible]	[illegible]	[illegible]	[illegible]
4267	[illegible]	[illegible]	[illegible]	[illegible]

SERIE-4350 E

CAPS THREADED (MALE)

REF.	ød	R	A	L	P (Kg)
4351	[illegible]	[illegible]	[illegible]	[illegible]	[illegible]
4352	[illegible]	[illegible]	[illegible]	[illegible]	[illegible]
4353	[illegible]	[illegible]	[illegible]	[illegible]	[illegible]
4354	[illegible]	[illegible]	[illegible]	[illegible]	[illegible]
4355	[illegible]	[illegible]	[illegible]	[illegible]	[illegible]
4356	125	2"	86	125	4,2
4357	[illegible]	[illegible]	[illegible]	[illegible]	[illegible]
4358	[illegible]	[illegible]	[illegible]	[illegible]	[illegible]
4359	150	2"	120	135	7,3
4360	[illegible]	[illegible]	[illegible]	[illegible]	[illegible]
4361	[illegible]	[illegible]	[illegible]	[illegible]	[illegible]
4362	[illegible]	[illegible]	[illegible]	[illegible]	[illegible]
4363	[illegible]	[illegible]	[illegible]	[illegible]	[illegible]
4364	3 5	2"	225	120	3,3

SERIE-4375 EX-KS

CAPS

REF.	ød	A	L	P (Kg)
4376	[illegible]	[illegible]	[illegible]	[illegible]
4377	[illegible]	[illegible]	[illegible]	[illegible]
4378	[illegible]	[illegible]	[illegible]	[illegible]
4379	[illegible]	[illegible]	[illegible]	[illegible]
4380	[illegible]	[illegible]	[illegible]	[illegible]
4381	[illegible]	[illegible]	[illegible]	[illegible]
4382	[illegible]	[illegible]	[illegible]	[illegible]
4383	[illegible]	[illegible]	[illegible]	[illegible]
4384	[illegible]	[illegible]	[illegible]	[illegible]
4385	[illegible]	[illegible]	[illegible]	[illegible]
4386	[illegible]	[illegible]	[illegible]	[illegible]
4387	[illegible]	[illegible]	[illegible]	[illegible]
4388	[illegible]	[illegible]	[illegible]	[illegible]
4389	[illegible]	[illegible]	[illegible]	[illegible]

SERIE-4150 MMC-KS

ALL SOCKET TEE 45°

REF.	ød1	ød2	B	C	L1	H	L2	P (Kg)
4151	[illegible]	[illegible]	[illegible]	[illegible]	[illegible]	[illegible]	[illegible]	[illegible]
4152	[illegible]	[illegible]	[illegible]	[illegible]	[illegible]	[illegible]	[illegible]	[illegible]
4152-A	[illegible]	[illegible]	[illegible]	[illegible]	[illegible]	[illegible]	[illegible]	[illegible]
4153	[illegible]	[illegible]	[illegible]	[illegible]	[illegible]	[illegible]	[illegible]	[illegible]
4153-A	[illegible]	[illegible]	[illegible]	[illegible]	[illegible]	[illegible]	[illegible]	[illegible]
4153-B	[illegible]	[illegible]	[illegible]	[illegible]	[illegible]	[illegible]	[illegible]	[illegible]
4154	[illegible]	[illegible]	[illegible]	[illegible]	[illegible]	[illegible]	[illegible]	[illegible]
4154-A	[illegible]	[illegible]	[illegible]	[illegible]	[illegible]	[illegible]	[illegible]	[illegible]
4154-B	[illegible]	[illegible]	[illegible]	[illegible]	[illegible]	[illegible]	[illegible]	[illegible]
4154-C	[illegible]	[illegible]	[illegible]	[illegible]	[illegible]	[illegible]	[illegible]	[illegible]
4155	[illegible]	[illegible]	[illegible]	[illegible]	[illegible]	[illegible]	[illegible]	[illegible]
4155-A	[illegible]	[illegible]	[illegible]	[illegible]	[illegible]	[illegible]	[illegible]	[illegible]
4155-B	[illegible]	[illegible]	[illegible]	[illegible]	[illegible]	[illegible]	[illegible]	[illegible]
4155 C	[illegible]	[illegible]	[illegible]	[illegible]	[illegible]	[illegible]	[illegible]	[illegible]
4155-D	[illegible]	[illegible]	[illegible]	[illegible]	[illegible]	[illegible]	[illegible]	[illegible]
4156	[illegible]	[illegible]	[illegible]	[illegible]	[illegible]	[illegible]	[illegible]	[illegible]
4156 A	[illegible]	[illegible]	[illegible]	[illegible]	[illegible]	[illegible]	[illegible]	[illegible]
4156-B	[illegible]	[illegible]	[illegible]	[illegible]	[illegible]	[illegible]	[illegible]	[illegible]
4156-C	[illegible]	[illegible]	[illegible]	[illegible]	[illegible]	[illegible]	[illegible]	[illegible]
4157	315	90	[illegible]	205	[illegible]	[illegible]	[illegible]	[illegible]
4157-A	315	110	[illegible]	[illegible]	[illegible]	[illegible]	[illegible]	[illegible]
4157-B	315	150	[illegible]	[illegible]	[illegible]	[illegible]	[illegible]	[illegible]

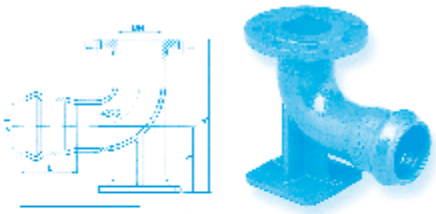

SERIE-4275 EN-KS

FLANGED SOCKET 90° DUCKFOOT BEND

REF.	DN	ød	A	L	H	h	P (Kg)
4276	90	90	200	135	220	120	12
4277	90	110	230	115	250	120	13,5
4278	100	110	300	115	250	120	14,8
4279	90	150	300	145	280	120	15,5
4280	150	150	350	145	320	140	[illegible]

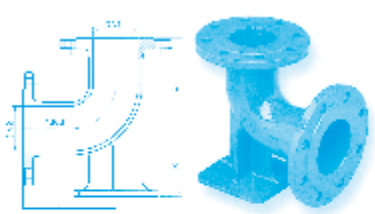

SERIE-4300 N-KS

DOUBLE FLANGED 90° DUCKFOOT BEND

REF.	DN 1	DN 2	B	C	H	P (Kg)
4301	80	80	[illegible]	[illegible]	[illegible]	[illegible]
4302	80	100	[illegible]	[illegible]	[illegible]	[illegible]
4303	100	100	[illegible]	[illegible]	[illegible]	[illegible]
4304	80	150	[illegible]	[illegible]	[illegible]	[illegible]

Your choice in waterflow control

TALIS is always the number one choice whenever water transport or control is required. TALIS has the best solution for water and energy management, as well as for industry and municipal applications. With a varied range of products, we offer comprehensive solutions for the entire water cycle. From hydrants to butterfly valves. From service connection valves to needle valves. Our experience, innovative technology, global expertise and individual consultation process form the basis for developing sustainable solutions for the efficient handling of the vital resource "water".

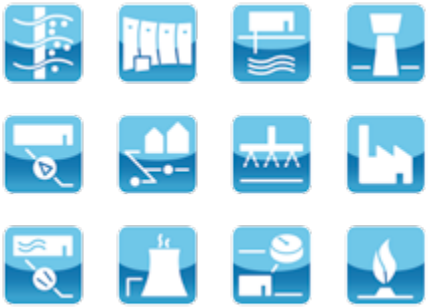

Belgicast Internacional, S.L.
Bº Zabalondo 31
48100 Munguía (Vizcaya)
Nacional • Tel: 94 488 91 00 • Fax: 94 488 91 30
Export • Tel: +34 94 488 91 20 • Fax: +34 94 488 91 25
belgicast@talis-group.com
www.belgicast.eu

Note: Specifications may be changed without notification at any time
Copyright: No copying without express written permission of BELGICAST
BELGICAST is a Registered Trademark

TALIS
YOUR CHOICE IN WATERFLOW CONTROL

1.000-03/2012